Your Stay on the General Surgery Unit

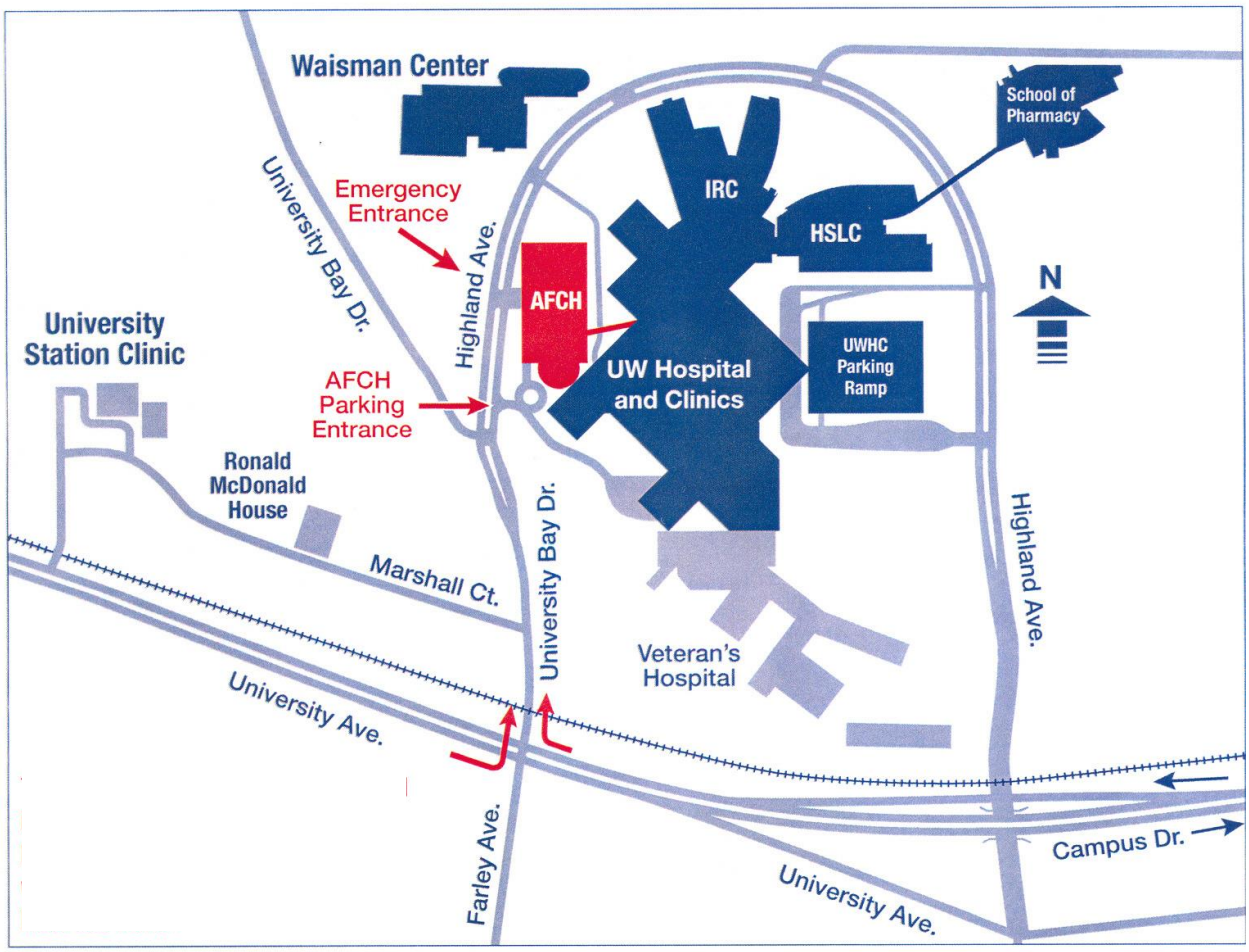
Waisman Center
School of Pharmacy
IRC
HSLC
Emergency Entrance
University Bay Dr.
Highland Ave.
AFCH
N
University Station Clinic
UW Hospital and Clinics
UWHC Parking Ramp
AFCH Parking Entrance
Ronald McDonald House
Marshall Ct.
University Bay Dr.
Highland Ave.
Veteran's Hospital
University Ave.
Farley Ave.
Campus Dr.
University Ave.

Welcome to the University of Wisconsin Hospitals and Clinics General Surgery Unit

If you or your family has any questions throughout your stay, feel free to ask. Our nursing staff and health care team are here to support you.

Table of Contents

The Surgery Unit…… 3
In the Hospital……..3
The Surgical Unit 3
The Health Care Team 4
Primary Supports 5
Equipment After Surgery 5
Medicines 6
Let your nurse or doctor know if you have any questions about the medicines you are taking. 6
Complications After Surgery 7
After Surgery 8
Pain Control 9
Diet 10
Constipation 11
Wound Care 12
Emotional Changes 13
Going Home 13
Home Care 14
Who to Call 14
Questions 15

This booklet will help you learn what to expect during your hospital stay. Please read this in advance to prepare for your stay. You may want to review this a few times while in the hospital.

The Surgical Unit

Right after surgery, you will go to the recovery room. Once your pain is under control and you are awake, you will be moved to your hospital room. Here you will meet your nurse and nursing assistant (NA) and get settled in. Your family and friends are welcome to visit you.

When you arrive, the nurse and NA will take your vital signs (blood pressure, heart rate, temperature, oxygen levels, and breathing rate). You may also have a sticker around one of your fingers that is attached to a small machine to keep a constant reading of your oxygen level and heart rate. These vital signs will be taken often during the first few hours after you arrive in your room. Later vitals will be taken every 4 hours, even through the night. The nurse will listen to your heart, lungs, and abdomen, look at your incision, and ask about your pain level.

You will be asked a set of admission questions. It may be helpful to have a family member around who can also help answer questions, if you prefer. A nurse may have called you at home before your stay to ask these questions. If that is the case, you will not need to answer them again.

The number of days spent in the hospital is hard to predict for some patients. We will work with you to help you meet all your goals in order for you to be discharged. These include:

- Being able to eat.
- Being able to move around safely.
- Return of bladder and bowel function.
- Pain control.

If at any point during your stay your health care team feels that you need more intense care or treatment, you may be transferred to an IMC (intermediate care unit) or ICU (intensive care unit). Here the nurses and doctors can keep a closer eye on you and give certain treatments, if needed.

In the Hospital

All rooms are private with private bathrooms and showers. You can adjust the heating and cooling to your liking in the room as well. Your family and friends are welcome to visit you during your stay. If you'd like to learn more about visiting, look in the Patient and Family Guide in your room for more details.

We provide hospital gowns for you during your stay, which we will ask you to wear. You will be given a new gown each day or at your request. If it is more comfortable for you, you may bring in loose fitting clothing from home or a bathrobe. Be aware that these may get dirty while you are in the hospital. When you are out of bed, please wear something on your feet to prevent falls. We provide you with non-slip socks to wear when out of bed. Please bring shoes or slippers for walking in the halls after surgery.

We will provide you with soap, toothbrushes, toothpaste, shampoo, razors, shaving cream, deodorant, lotion, washcloths and towels. We will provide special soap for you to use to reduce the germs on your skin. You should try to do as much of your own hygiene as you can. We will expect that you brush your teeth or do basic oral care at least twice daily. Hygiene is the best way to prevent infection. It will become a part of your daily routine while you are here.

You may plan a time with the NA to help you with your bathing and oral care. Ask your nurse when you may shower. This will depend on what kind of wound you have and how many days it has been since surgery. You will not be able to take a tub bath or soak under water for at least two weeks after surgery. Before you go home, you will be doing your daily cares on your own, or at the level you were able to before surgery.

You can bring items from home that may make your stay here more comfortable but leave valuable items at home.

The Health Care Team

During your stay, your health care team will make a plan for you which we will update and change as needed. You are a vital member of the team. We believe input from you and your family is best when making your care plan. We know that your stay, even one that has been planned, can be stressful. Feel free to talk to your health care team about any questions or concerns you have. Our goal is to help you get better and to make sure you can care for yourself at home.

The **attending surgeon** is the doctor who directs all of your medical care.

The **resident and interns** are doctors who work very closely with you and your surgeon. You can expect visits from your doctors each day to assess your progress. It is hard to predict when your doctors will visit and visits are often brief. Try to either write down your questions to ask the doctors or let your nurse know what your questions are so that we can help you get your questions answered.

Medical students are students (future doctors) who help the doctors with your care and learn from you as a patient. These students may come to see you many times a day with or without the resident doctors.

The **registered nurse (RN)** is the nurse you will see each shift. The nurse will assess your pain, incision, and other symptoms. The nurse will give you medicines, and create and follow your plan of care. They will also teach you about your care plan and provide updates. The nursing staff will have the most contact with you during your stay and can help you in many ways. Feel free to ask the nurses any questions you may have. Your nurse is a great resource to you during your stay.

The **nursing assistant (NA)** may be working with your RN to help with your cares such as walking, using the bathroom, and bathing.

You can expect to be assigned 2-3 RNs and NAs in a 24-hour day. They will check on you about every hour during the day and every 2 hours at night. Use the white call light by your bed to let us know about any other needs, questions, or concerns you may have.

During your stay, the **pharmacist** will review the medicines that you take at home and teach you about any new medicines before you go home.

The **coordinated care staff** is a team which consists of a nurse case manager and a social worker. One of them will meet with you during your stay to help arrange the safest discharge plan for you. This plan may include getting special equipment, home health care (to help with your incision, drain or ostomy care), or arrange for you to stay at a skilled nursing facility.

The **physical and occupational therapists** will see you if asked by your doctors. They will help you to become more mobile and help you to be safe and strong at home.

A **registered dietitian** will meet with you to discuss the new diet for home. This includes teaching you about foods that you will be able to eat and ones that you should avoid.

In most cases, the nurse who admits you becomes your **primary nurse**. Your primary nurse is assigned to take care of you when he or she is working. This allows for one nurse to get to know you and your family, help devise a plan of care in the hospital and manage your plan for discharge. All of the nursing staff can and will take very good care of you when your primary nurse is not working. We make every effort to keep the same nurses involved with your care. If you'd like to learn more about primary nursing, ask your nurse.

Primary Supports
We believe in a patient and family centered approach to care. **You** are the most important part of the team. We want you to provide us with names of people that support you and who you want involved in planning your care. Primary supports are the people that you are closest to.

Visiting Policy and Hours
Visiting hours are from 8 am – 9 pm. One visitor (18 years of age or older) is allowed to stay overnight with you. If you know that someone will be staying with you, tell your nurse and we will provide your visitor with a cot to sleep on, if one is available. Also, visitors must have a visitor pass to stay overnight. Ask your nurse how to get a visitors pass.

Parking and Validation
One visitor can have a parking pass validated before leaving the hospital. You can have this validated at the Admissions Desk or Information Desk during normal business hours.

Equipment After Surgery
You may have a urine catheter placed. The urine catheter is also called a "Foley" and will remain in place for 1-2 days. This tube constantly drains urine from your bladder. You may still have the urge to pass urine. If you have a full feeling, let your nurse know right away, your catheter may need to be adjusted to allow it to drain.

Once your urine catheter is removed, we will measure your urine, by using a urinal or a "hat" placed in the toilet. Your nurse will show you how this is done. Sometimes, patients cannot pass urine when the Foley is removed. If this happens, you may need to have a catheter put in to drain out the urine. This catheter will then be removed right after draining the urine and will not be left in. We may need to put the urinary catheter back in to drain the urine and send you home with it in place. If that happens, the nurse will teach you how to care for your Foley at home.

Nasogastric (NG) Tube
This is a tube placed through your nose and into your stomach. It drains fluid and air to prevent nausea and vomiting. It stays in place until your bowel (intestines) begins working again. The NG tube will be removed before you start eating. You will not go home with it.

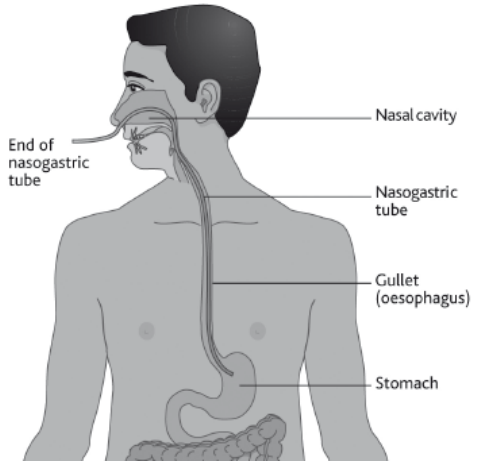

Drains
A drain may be placed to prevent fluid from collecting in your abdomen. These drains will be emptied every 8 hours, or more often if needed. Let your nurse know if your drain fluid needs to be emptied. Sometimes, patients go home with a drain in place. If this occurs, the nurse will teach you how to care for your drain at home. Most of the time, the doctors will remove the drain while you are still in the hospital.

Medicines
A pharmacist will visit with you to confirm the medicines you take at home. The doctors may decide to hold some of your normal medicines from home and restart them at a later time. Nurses will give you your medicines throughout the day. At first, many of them will be in a liquid form that will go into your veins through an IV. Some of the doses you take at home in a pill form may be changed to the same amount in the IV form. Once you are able to eat, they will be changed back to pill form.

You will likely get medicines in the hospital that you may or may not take at home. Common medicines given are:

- Zantac® (ranitidine) or Protonix® (pantoprazole) help to reduce the amount of acid made in your stomach. This will prevent stomach irritation that can cause ulcers or heartburn.
- A stool softener to prevent constipation. Pain medicines can cause constipation. Please read the section about constipation in the First Day Surgery booklet in your folder.
- Medicines are used to prevent blood clots from forming in your legs and traveling to your heart, lungs, or brain. Heparin is the most common form used. It is given as an injection (shot) either in the back of the arm or in the belly (abdomen) 2 to 3 times a day.

Let your nurse or doctor know if you have any questions about the medicines you are taking.

Compression Stockings/TEDs/SCDs/Ace Wrapping
To prevent blood clots while you are in the hospital, the doctor may order you to wear TED hose or compression stockings on your legs. These put pressure on the deep veins and helps with blood flow. You will wear these stockings all day and night except for an hour during the day when we give your legs a break. You also will wear SCDs while you are lying in bed that provide a constant massage to your lower legs. These will help blood return to your heart. If we cannot fit you with the proper TED hose, your nurse

will wrap your legs with ace bandages to control any swelling in your legs.

Heart Monitor/Telemetry
This is a small battery pack that has 5 electrodes with wires that connect to your chest wall with sticky pads. It allows nurses and doctors to monitor your heart 24 hours a day. You will be able to move around in the hallway, but you will have to stay on this unit. If you get too far away it will no longer monitor your heart rhythm.

Coughing and Deep Breathing
Your nurse will ask you to breathe deeply, cough, and use an incentive spirometer. Pain may prevent you from wanting to take deep breaths. Deep breathing prevents pneumonia. Pain medicine can be given to help you take deep breaths more easily.

Incentive Spirometer

1. Exhale and place your lips tightly around the mouthpiece.
2. Take a deep breath. As you breathe you slowly raise the Flow Rate Guide between the arrows.
3. Hold it as long as you can. Try to keep the guide as high as you can for as long as you can, or as directed by your nurse or respiratory therapist (RT).
4. Exhale and relax. Remove the mouthpiece and breathe out as usual.
5. Slowly, repeat 10 times per hour while you are awake.

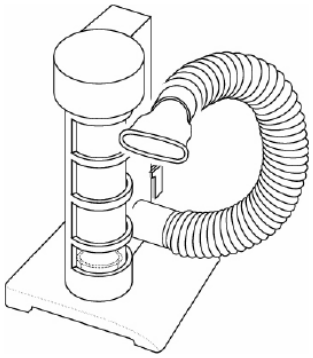

To cough and deep breathe:

1. Place a pillow over your chest/abdomen to lessen the pain when coughing.
2. Breathe in deeply and slowly through your nose. Hold it.
3. Exhale slowly through your mouth.
4. Repeat two more times.
5. Breathe in again, and hold it, and then cough.
6. Repeat every hour while you are awake.

Complications After Surgery

Pressure ulcer is an injury to the skin and the tissue under it. It is caused by constant pressure in one area. Pressure on a small area of skin can block the tiny vessels that supply your skin and tissues with oxygen and nutrients. If tissue is starved for too long it begins to die causing a pressure ulcer to form. Pressure ulcers may form on the lower back below the waist (tailbone), hips, heels, knees, ankles, shoulder blades, back of the head, and spine.

One of the most important things that you can do to prevent a pressure ulcers is to change position at least every two hours. If you can't turn by yourself, your nurse will help you. Other things you can do to prevent pressure ulcers are eating a healthy diet, moving around your room, getting out of bed, walking in the halls, and keeping your skin clean and dry.

Deep vein thrombosis (DVT) is a blood clot that forms in the deep veins of the body, mostly in the legs. DVTs alone are not life threatening. If the clot breaks free and moves to the lungs it can lodge in vessels there. This is called a **pulmonary embolism (PE)**. A PE is serious and can be life-threatening. The risk of getting a PE is fairly low. We work to prevent DVTs or a PE by

asking you to wear TEDS, SCDs, and take frequent walks. These help to increase blood flow in your legs and decrease your chances of a blood clot. Your doctor will prescribe a blood thinner (heparin) that is often given as an injection into your abdomen or the back of the arm.

Ileus is a blockage of the intestines (bowel). The ileus prevents movement of food, fluid, and gas through the bowel. An ileus may be caused by any type of surgery or can be due to opioid pain medicines. A lack of activity also may cause an ileus. Signs and symptoms of an ileus include:

- Nausea
- Vomiting
- Stomach cramps
- Bloating
- Lack of bowel movements and gas

We treat an ileus with IV fluids to keep you hydrated, a NG tube in your stomach to relieve any pressure and prevent vomiting, and not letting you eat food. You should be as active as you can while you heal from your ileus. Activity will help your bowel to wake up. You will know that your ileus has healed if:

- Doctors and nurses hear normal bowel sounds.
- Only small amounts of liquid comes out of your NG tube.
- You can pass gas and have bowel movements.
- You have decreased bloating and a soft abdomen.
- You can eat a clear liquid diet without nausea or vomiting.

Infection can occur after surgery. Symptoms include:

- Redness
- Swelling
- Drainage
- Odor
- Pain not controlled by pain medicine
- Fever over 100.4°F

An infection may require antibiotics or having your incision opened to allow it to drain. If you have any of these symptoms, call us at **608-263-7502** between 8 am- 4:30 pm. Call the doctor on call **608-262-0486** after hours and on weekends.

Preventing Infection

You and your family can do a lot to prevent the spread of infection. Hand hygiene is the best way to prevent the spread of germs and infections. Be sure to have your visitors and health care team members use alcohol gel or wash their hands with soap and water before they enter your room and after they leave to help prevent the spread of germs.

Isolation

Some patients will be placed in isolation to help prevent the spread of infection to staff and other patients. Family and visitors must wear a gown and gloves when visiting. Ask your nurse what your family should wear before they enter your room. There will also be signs on the door showing your family and visitors what they need to wear to enter the room. They will also be asked to wash their hands before and after they leave your room.

After Surgery

The day after surgery, your nurse will write goals for the day and the plan for your hospital stay on your white board. Your plan will include walking and sitting in a chair which is a vital part of your recovery. Today, your nurse will help you to sit in a

chair and will help you when you walk in the hallway. We want you to try to walk and sit in a chair three times a day. Walking helps the bowels begin moving and helps you pass gas and stool. Walking also helps your lungs expand and improves your overall body strength. Be sure to call your nurse for help before getting out of bed unless your nurse has told you it is okay to do so on your own.

Pain Control

Good pain control helps you heal faster, leave the hospital sooner, and prevent problems. Drug and non-drug treatments can help prevent and control pain.

You will be asked to rate your pain on this scale.

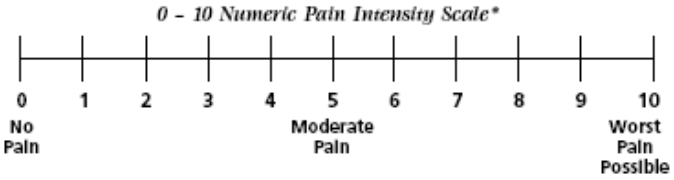

The goal is to be at a level that will allow you to deep breathe, eat, walk, and sleep. This may mean that you may not be pain-free but your pain should not prevent you from being able do these things. We need to ask you what your pain level is, so that we know how well the medicine is working. Tell us about your pain and if it is not going away. Do not worry about being a "bother." Pain medicine may cause you to become drowsy, dizzy, or lightheaded. You are the only one who can tell us about your pain, so be honest so we can help keep your pain under control and manage side effects.

PCA

Some patients will be placed on intravenous patient controlled analgesia (IV PCA). This device allows you to give your own dose of pain medicine. PCA is based on the belief that the patient is the best judge of how much pain they are feeling, and that each person may need a different amount of medicine to relieve their pain. PCA allows you to take the medicine when you feel like you need it.

To receive a dose of medicine, all you need to do is press the green button. When you press the button, the medicine goes into your IV. Your nurse will let you know how often you can push your button to get pain medicine. Often, it is every 6 to 10 minutes. You will only get pain medicine when the green button is lit, so you cannot overdose with the PCA. Your nurse will check with you to make certain you are comfortable and that you are using the pump as you should.

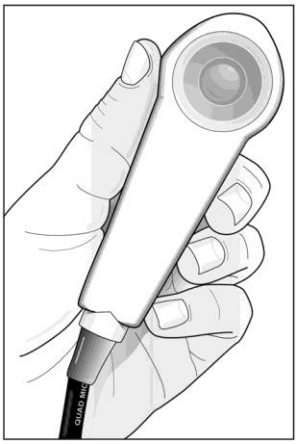

You should be the only one to push the button. Your family or friends should not push the button for you while you are sleeping. This could cause you to get too much medicine as you are no longer in control. Please tell your doctors and nurses if you feel you cannot control your pain. You must tell your nurse how your pain medicine is working so they can make changes to your medicine. You will no longer use the PCA when your doctors feel your pain can be controlled with pills.

Epidural
During surgery, some patients will have an epidural with patient controlled epidural analgesia (PCEA) to control your pain. Pain medicine from the pump goes through tubing into your epidural space in your back. This pump is set to give you continuous pain medicine. You will have a button to push as needed every 30 minutes.

If you have both an epidural and a PCA, use the epidural first. The epidural button is black and does not change colors when you push the button. For your safety be sure that only you, the patient, press the button to receive the pain medicine.

Oral
Your nurse will tell you how much medicine your doctor has prescribed for you while you are in the hospital. Your nurse will also explain how often you can receive these medicines. You may be taking opioid pain medicine to help improve your comfort.

Opioids are a stronger pain medicine than what you can buy over-the-counter at the store. You should only take them when you are in moderate to severe pain. Not everyone's pain response requires opioids for comfort. Some people will only need to take a non-opioid pain medicine such as acetaminophen (Tylenol®). Take pain meds when pain first begins. Pain pills take 20-30 minutes to work. Do not drive, operate machinery, or drink alcohol while taking opioid pain medicine once you go home.

Addiction to pain medicine is rare, if you take the medicine as prescribed, unless you have a history of substance abuse. If you are concerned, talk with your health care team.

Other Pain Relief Methods
Other pain relief methods include relaxation, imagery, distraction, skin stimulation, hot and cold compresses, music, massage, and acupuncture. Ask your nurse about pain control methods that are offered in the hospital. Some may include a personal cost to the patient (massage and acupuncture).

Diet
After surgery you will be given IV fluids to keep you hydrated. To keep your mouth moist, you can use swabs dipped in ice chips and water. Nurses and doctors may listen for sounds from your abdomen, ask if you are passing gas or stool, if you have any nausea or vomiting, and about your appetite. This is to see if your bowel function has improved after surgery. You can expect that your bowel function will return after a few days. The time it takes for the bowel to start working is different with each person.

As you and the healthcare team feel you are ready, you will be allowed to eat. You will start slowly with clear liquids. Clear liquids include juice, Jello®, broth, popsicles, etc. You will then move on to full liquids such as milk products, creamed soups, pudding, Boost®, protein drinks. Then, you will move on to "real food." For some, that will be a general diet with no restrictions on what you can eat. The key to advance your diet is to start out slowly. Eat only what feels good and tastes good. If you begin to feel sick to your stomach or full, you should stop eating and tell your nurse.

If you were on a special diet at home (diabetes, low sodium, lactose-free, etc) or have food allergies, please talk to your health care team to make sure we provide you with a similar diet during your stay.

Some patients will be placed on a low fiber diet. This diet is best for surgical patients with bowel resections and new ostomies. This diet helps you have fewer and smaller bowel movements with less pressure, cramping, and pain. Fiber increases the amount of stool and gas you produce and how often you have bowel movements. Foods without fiber are white breads (no wheat, bran or whole grains), peeled or cooked fruits (no dried fruits), cooked vegetables (no raw vegetables), no smoothies made with fruits or grains, no seeds, and no beans.

For most patients who leave the hospital on a low fiber diet, the doctor will change your diet to a general diet without restrictions at your 2 week follow-up visit.

Constipation

Opioid pain medicine can cause constipation. Pain medicine slows down bowel movements moving through the intestine. This causes the stool to become hard. If you have hard bowel movements, have trouble passing bowel movements, and the movements are not often enough, then you are constipated.

Once you are home, you will need a plan to avoid constipation. Stick to the plan as long as you are taking opioid pain medicine. Review your plan with your doctor or nurse. Some patients will be discharged on special diets, please talk to your doctor before making any changes to your diet.

Your plan could include:

Eating foods that have helped you to relieve constipation in the past.

Eating foods high in fiber, as long as they have been approved by your doctor. This includes foods such as uncooked fruits, raw vegetables, and whole grains and cereals. Try prune juice. If you are not hungry, do not force yourself to eat fiber.

Drinking plenty of liquids. Eight to ten 8-ounce glasses of fluid each day will help keep your stools soft. Warm liquids often help your bowels to move.

Exercising as much as you can each day or at least every other day. Increase the amount you walk. Check with your doctor or nurse about the exercises that are best for you.

Planning your bowel movements for the same time each day, if you can. Set aside time for sitting on the toilet.

Aiming for a bowel movement every second or third day rather than every day.

High Fiber Foods

Cereals & Flours	Bran cereals, whole-wheat bread, rye bread and crackers, wheat germ, corn, cornmeal, wild rice, brown rice, barley
Fruits	Fresh, canned, or dried fruits, especially those with skin or seeds (apples, plums, pears, peaches, tomatoes, berries, raisins, and dates)
Vegetables	Any raw or cooked vegetable (not overcooked) such as carrots, cabbage, peas, dry beans, and lentils

Stool Softeners and Laxatives
Many people taking pain medicine need to take a stool softener. This alone may not work. You may need to add a gentle laxative. Be sure to check with your doctor before taking any of these on your own.

Your doctor or nurse may suggest taking a laxative on a regular schedule rather than waiting for constipation to happen. There are many types and brands of laxatives, and most are over-the-counter. Talk to your doctor to see which may work best for you.

Bulk Laxatives and Fiber
Bulk laxatives and fiber medicine, like Metamucil®, absorb water and expand to increase bulk and moisture in the stool. They are not the best to use for constipation from narcotics. They should only be used if you can drink plenty of fluids throughout the day.

Wound Care

Smoking/Tobacco and Wound Healing
Smoking or tobacco use causes blood vessels to become smaller. The smaller vessels have a hard time carrying oxygen, nutrients, and healing factors to the wound. This can cause wounds to take longer to heal. Carbon monoxide is a poison from smoking and tobacco use (such as “chew”) that enters your blood cells. This poison lowers the level of oxygen in your blood.

Smoking and tobacco use can increase the risk of an infection of your wound. Quitting tobacco is the best choice you can make to help your incision heal faster, safer, and with fewer problems. If you want to quit, please let your nurse know. We can get you information on how to quit smoking.

Incision Care
Some patients will have only steri strips (taped bandages) over their incision, while other patients will have a stapled incision. A dressing will stay over your incision for 48 hours after surgery. Your doctor and nurse will check your incision to make sure there are no signs or symptoms of infection (redness, warmth, pus-like drainage, excess swelling or bleeding, pain not controlled by pain pills, and/or fever of 100.4°F. If you have any of these symptoms, call the clinic at **608-263-7502** between 8 am-4:30 pm. Call the doctor on-call at **608-262-0486** after hours and on weekends.

If you have steri strips (taped bandages) on your incision, allow them to fall off on their own.

If you have staples, your doctor will remove them during your clinic visit about 2 weeks after you go home. To clean the incision, gently wash the incision with soap and water. Let it air dry. It is okay to shower when you are at home. Don’t take a bath, soak or swim for at least two weeks or until your surgeon says it is okay.

Open Wound
If you have a wound that is being packed, you will receive written instructions on how to care for your wound before you go home. We will teach you how to change your dressing while you are in the hospital. If you are not able to change the dressing, we will teach a family member or friend how to change it for you. We will send you home with supplies to keep packing the wound as ordered by your doctor. After you go home, home health care may be set up to check on your wound and help with any needs that you may have.

Emotional Changes
You may be feeling worried, sad, angry, or scared. These and many other feelings can occur while in the hospital. It takes time to deal with your new diagnosis, treatment, and the new changes in your life. Every person copes in their own way. Some have found it helpful to talk about their feelings with the people close to them and to ask for their support. Talk to your doctor, nurse, or other members of the health care team as they can also be helpful. We have resources at University Hospital and support groups in the area that we can connect you with.

Going Home
The length of your hospital stay depends on your surgery and how long it takes you to recover. You may need to have a family member or friend learn about your home care before you leave the hospital. You will receive prescriptions for new medicines. Please bring your insurance card if you plan to fill your prescriptions at the hospital.

You will need a responsible adult to drive you home and stay with you as needed. Your case manager will help make plans for Home Health or a nursing home stay, if needed.

There are six standards that must be met before you go home. You must:

- Be able to eat and tolerate a diet.
- Be able to walk by yourself or move around as you did before being in the hospital.
- Be able to control your pain with oral pain pills.
- Be able to pass urine
- Pass gas and stool (you may have loose stools).
- Be able to safely take care of yourself at home or have someone who can take care of you.

Once these standards are met, one of your doctors will write an order for you to be discharged. Your paperwork will be done, prescriptions will be written, and future visits will be made. **All of this often takes a few hours, but please work with your nurse and team to figure out a time for discharge. This is important if you have a family member or friend that will be picking you up from the hospital.**

You can help in your discharge process if you alert us early to any special needs about your discharge, such as long rides home, limits to when you can be picked up, etc.

The nurse will review your discharge instructions which include:

- Activity orders
- Lifting restrictions
- Your diet at home
- Wound care instructions
- Follow-up visits
- Any special instructions
- Phone numbers for questions or concerns

A pharmacist will meet with you to review the medicines you will be taking home.

Home Care

Slowly increase your level of activity. Based on your surgery you will have some activity restrictions. Most patients will have to avoid lifting more than 10 pounds for 2 weeks.

Make sure you are active when you go home. The best way to do this is to keep walking. Slowly resume your normal routine. Be sure that you stay within your lifting limits. You can find them on your discharge instructions. Check with your doctor if you are not sure if an activity is right for you. Listen to your body. Let comfort be your guide. If it hurts, stop.

Check with your doctor about when you may:

- Resume driving. Do not drive if you are taking opioid pain medicine. These include Percocet®, oxycodone, Vicodin®, Tylenol® #3, Dilaudid®, morphine.
- Go back to work.
- Resume sex.

When to Call

- Unusual pain that you haven't had before
- Pain not controlled by pain medicine
- Nausea
- Vomiting
- Severe fatigue that doesn't go away
- Unusual drainage at the incision
- Redness at the incision site that appears to be spreading
- Fever of 100.4°F or 38°C
- Any unusual or prolonged bleeding
- Abdominal bloating/distention

Who to Call

Surgery Clinic	**608-263-7502**
Colorectal Clinic (Digestive Health Center)	**(608) 890-5000**
Outpatient Pharmacy	**608-263-1280**
Hospital Operator	**608-263-0486**
Patient Relations	**608-263-8009**
UW Emergency Room	**608-262-2398**
Toll-Free	**1-800-323-8942**

If you think you are having symptoms of an emergency, **call 911**.

Your health care team may have given you this information as part of your care. If so, please use it and call if you have any questions. If this information was not given to you as part of your care, please check with your doctor. This is not medical advice. This is not to be used for diagnosis or treatment of any medical condition. Because each person's health needs are different, you should talk with your doctor or others on your health care team when using this information. If you have an emergency, please call 911. Copyright © 12/2019 University of Wisconsin Hospitals and Clinics Authority. All rights reserved. Produced by the Department of Nursing HF#7192.

Questions