CODE 3®

Installation and Operation Manual
WingMan Flex™ Series
Interior Lighting System

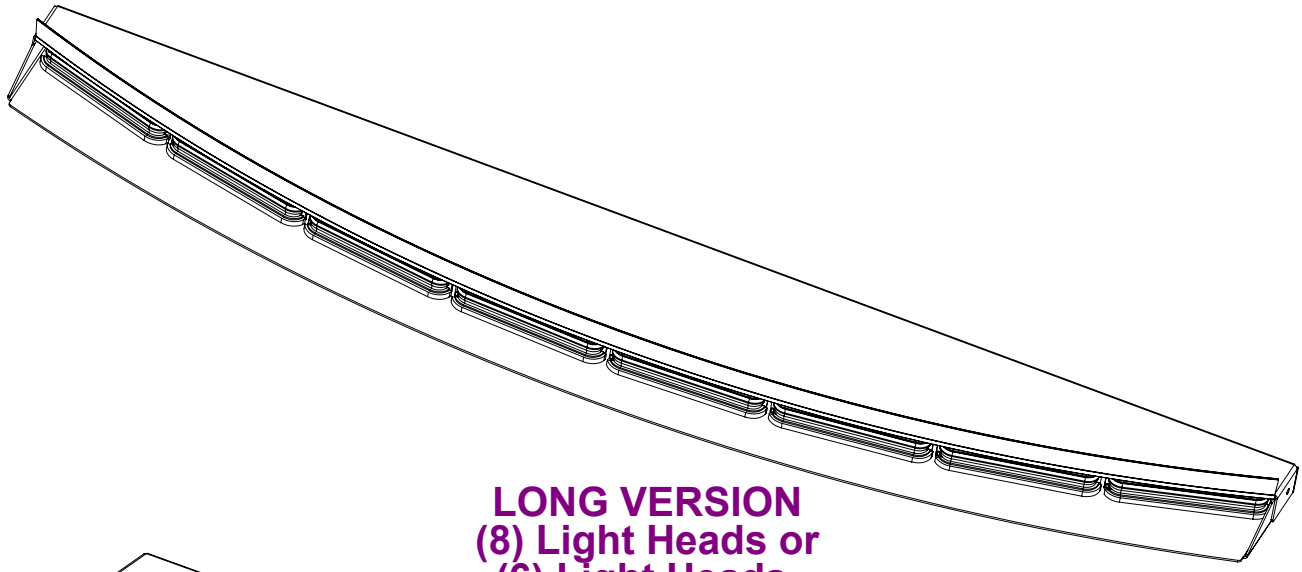

LONG VERSION
(8) Light Heads or
(6) Light Heads

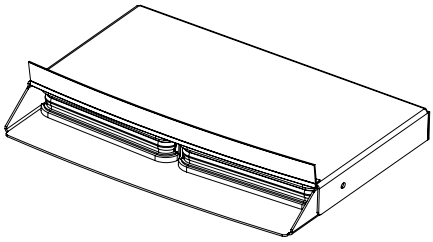

MINI VERSION
(2) Light Heads

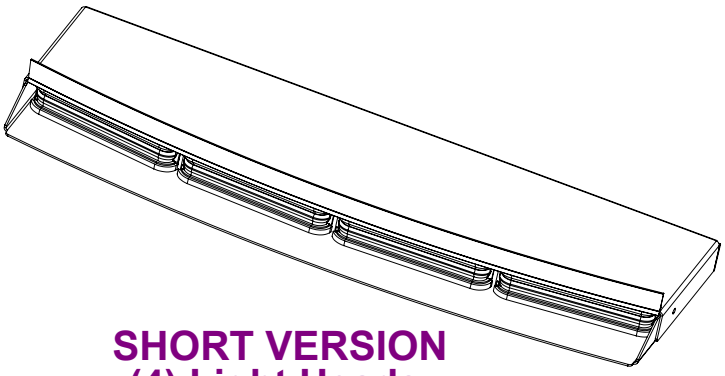

SHORT VERSION
(4) Light Heads

Introduction: WingMan Flex Series

The Wingman Flex is an interior light for the rear deck of police sedans. It is designed so that it fits all common police sedans. The Wingman Flex comes with Code 3's new Flex central controller capability and exceptionally bright Torus™ LED lights. This interior light is designed so that when the unit is off it is virtually undetectable from outside the vehicle. It also uses gaskets to eliminate flashback. The Wingman Flex with the new Flex Central Controller comes in Single Color, Multi Color, and Multi/Single Color combinations.The WingMan Flex can also be ordered in an Independent Flashing Version, and can be ordered with internal wiring allowing it to be controlled by a NarrowStik Controller. There are three sizes available: Long, Short, and Mini.

Contents:

Specifications & Warnings.....02
Mounting Bracket Descriptions / Identificaion.....03-05
Installation & Mounting 2011+ Dodge Charger.....06-07
Installation & Mounting 2011+ PI Sedan.....08-10
Installation & Mounting Universal Bracket Kit.....10
Installation & Mounting 2011+ Chevy Caprice.....11-12
Installation & Mounting 2005-2017 Chevy Impala.....13-14
Wiring Instructions - Multi - Single & Combo Color Versions.....15
Wiring Instructions - Independant Flashing Versions.....16-17
Wiring Instructions - NASLCH2 NarrowStik Controller Versions.17
Also see Installation Manual for NASLCH2 NarrowStik Controller
Fusing Considerations.....18
Flash Patterns & Operations-Multi Color Versions.....19
Flash Patterns & Operations-Independant Flashing Versions.....20
Troubleshooting.....20
Replacement Parts - Main Assembly.....21
Replacement Parts - Mounting Brackets.....22
Notes.....23
Warranty.....24

Product Specifications:

Light Head Options: 18 LED Multi Color = Red/Blue, Red/Amber, Blue Amber, Red/White, & Blue/White-----All CC Controlled
9 LED, 6LED, 4LED, & 3LED Single Color = Red, Blue, Amber, & White----------All CC Controlled
9 LED, 6LED, 4LED, & 3LED Single Color = Red, Blue, Amber, & White---------All Independent Flashing

Size LONG VERSION Unit:------43.00" length X 1.38" tall X 8.00" deep----------Weight: 7.5 lbs
Size SHORT VERSION Unit:----22.13" length X 1.38" tall X 8.00" deep----------Weight: 5.5 lbs
Size MINI VERSION Unit:--------11.25" length X 1.38" tall X 8.00" deep----------Weight: 4.0 lbs

Input Voltage: =----------12VDC

Input Current: = Startup Current----------(8) Light Hd LONG VERSION-----0.007 Amps
(6) Light Hd LONG VERSION-----0.007 Amps
(4) Light Hd SHORT VERSION---0.007 Amps
(2) Light Hd MINI VERSION-------0.007 Amps

Current @ Power----------(8) Light Hd LONG VERSION-----0.005 Amps
(6) Light Hd LONG VERSION-----0.005 Amps
(4) Light Hd SHORT VERSION---0.005 Amps
(2) Light Hd MINI VERSION-------0.005 Amps

Max Current----------(8) Light Hd LONG VERSION-----11.30 Amps
(6) Light Hd LONG VERSION------9.20 Amps
(4) Light Hd SHORT VERSION----6.60 Amps
(2) Light Hd MINI VERSION--------3.40 Amps

IMPORTANT! Read all instructions before installing and using. Installer: This manual must be delivered to the end user.

WARNING!
Failure to install or use this product according to manufacturers recommendations may result in property damage, serious injury, and/or death to those you are seeking to protect!

Do not install and/or operate this safety product unless you have read and understand the safety information contained in this manual.

1. **Proper installation combined with operator training in the use, care, and maintenance of emergency warning devices are essential to ensure the safety of emergency personnel and the public.**
2. **Emergency warning devices often require high electrical voltages and/or currents. Exercise caution when working with live electrical connections.**
3. **This product must be properly grounded. Inadequate grounding and/or shorting of electrical connections can cause high current arcing, which can cause personal injury and/or severe vehicle damage, including fire.**
4. **Proper placement and installation is vital to the performance of this warning device. Install this product so that output performance of the system is maximized and the controls are placed within convenient reach of the operator so that s/he can operate the system without losing eye contact with the roadway.**
5. **It is the responsibility of the vehicle operator to ensure daily that all features of this product work correctly. In use, the vehicle operator should ensure the projection of the warning signal is not blocked by vehicle components (i.e., open trunks or compartment doors), people, vehicles or other obstructions.**
6. **The use of this or any other warning device does not ensure all drivers can or will observe or react to an emergency warning signal. Never take the right-of-way for granted. It is your responsibility to be sure you can proceed safely before entering an intersection, drive against traffic, respond at a high rate of speed, or walk on or around traffic lanes.**
7. **This equipment is intended for use by authorized personnel only. The user is responsible for understanding and obeying all laws regarding emergency warning devices. Therefore, the user should check all applicable city, state, and federal laws and regulations. The manufacturer assumes no liability for any loss resulting from the use of this warning device.**

Individual Mounting Bracket Descriptions

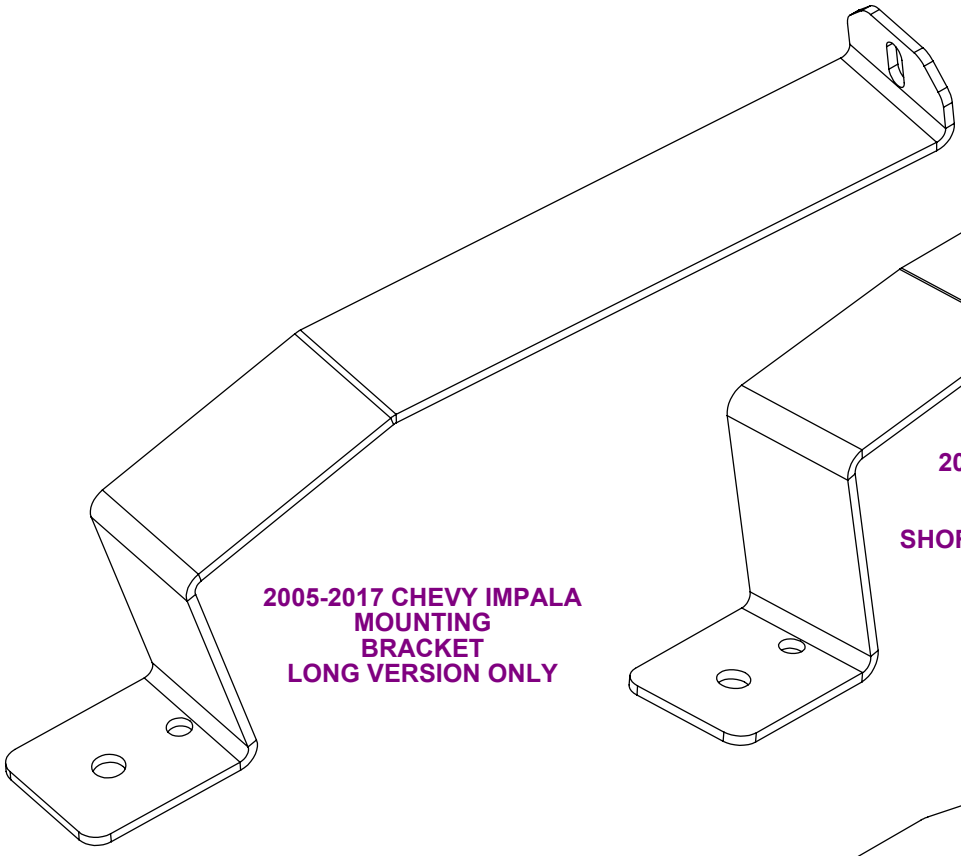

2005-2017 CHEVY IMPALA
MOUNTING
BRACKET
LONG VERSION ONLY

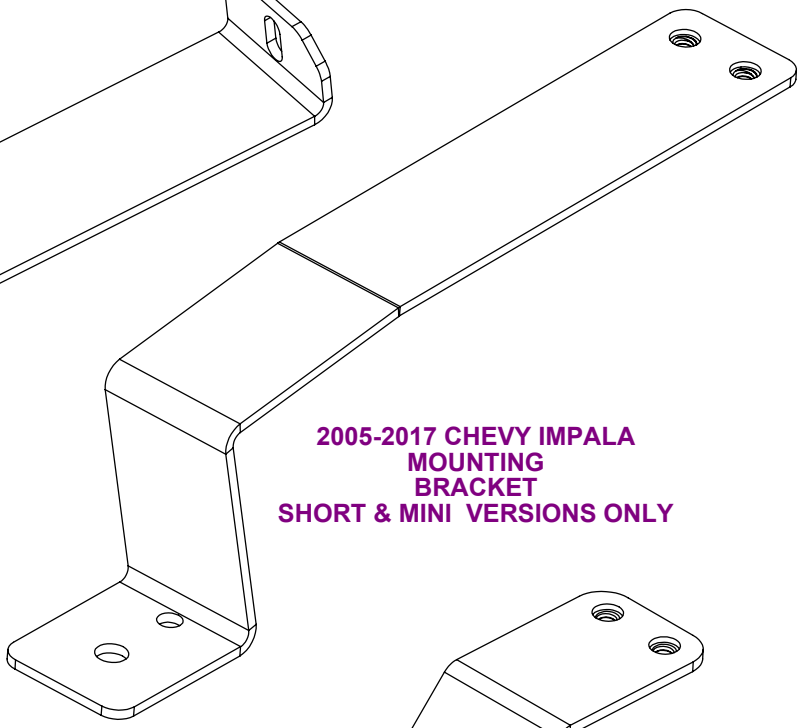

2005-2017 CHEVY IMPALA
MOUNTING
BRACKET
SHORT & MINI VERSIONS ONLY

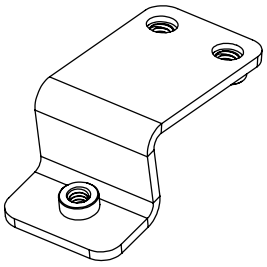

2011+ DODGE CHARGER
MOUNTING
BRACKET
ALL VERSIONS

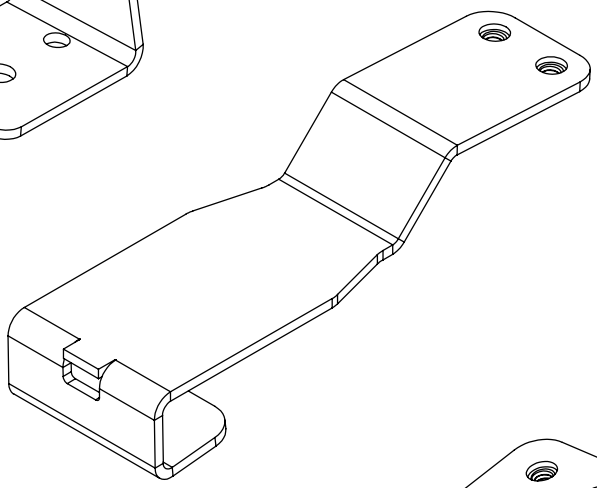

2011+ PI SEDAN
MOUNTING
BRACKET
ALL VERSIONS

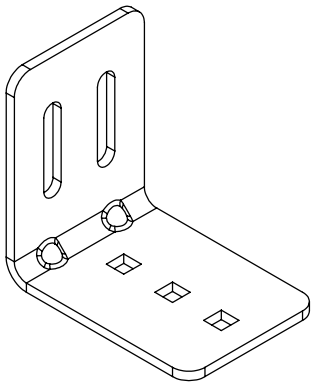

UNIVERSAL
MOUNTING
BRACKET
ALL VERSIONS

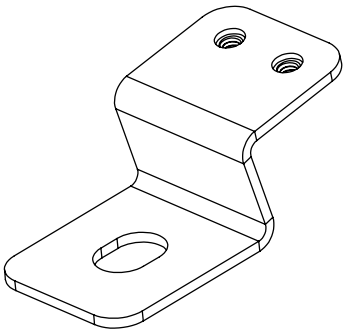

2011+ CHEVY CAPRICE
MOUNTING
BRACKET
ALL VERSIONS

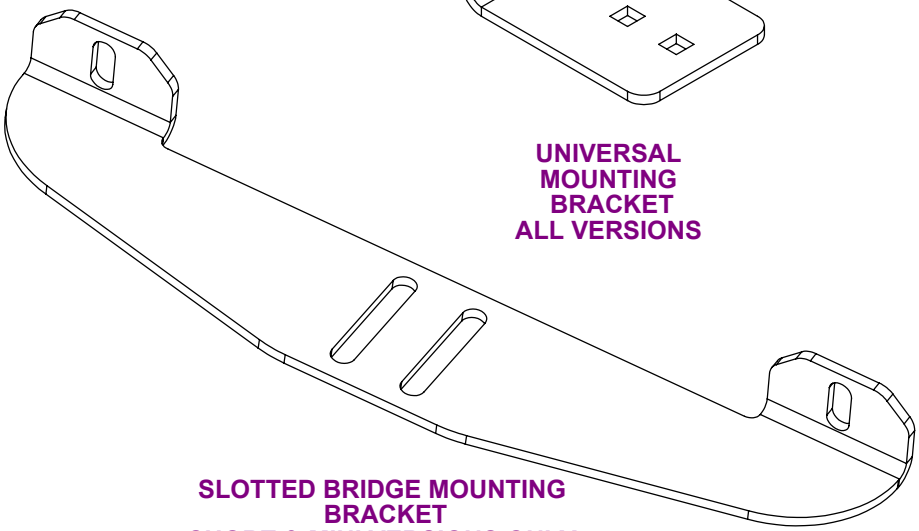

SLOTTED BRIDGE MOUNTING
BRACKET
SHORT & MINI VERSIONS ONLY

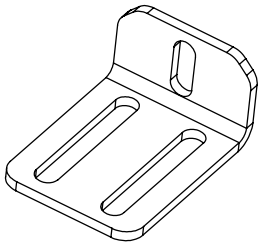

SLOTTED MOUNTING
BRACKET
LONG VERSIONS ONLY

LONG Version Assembly Views
Vehicle Bracket Identification

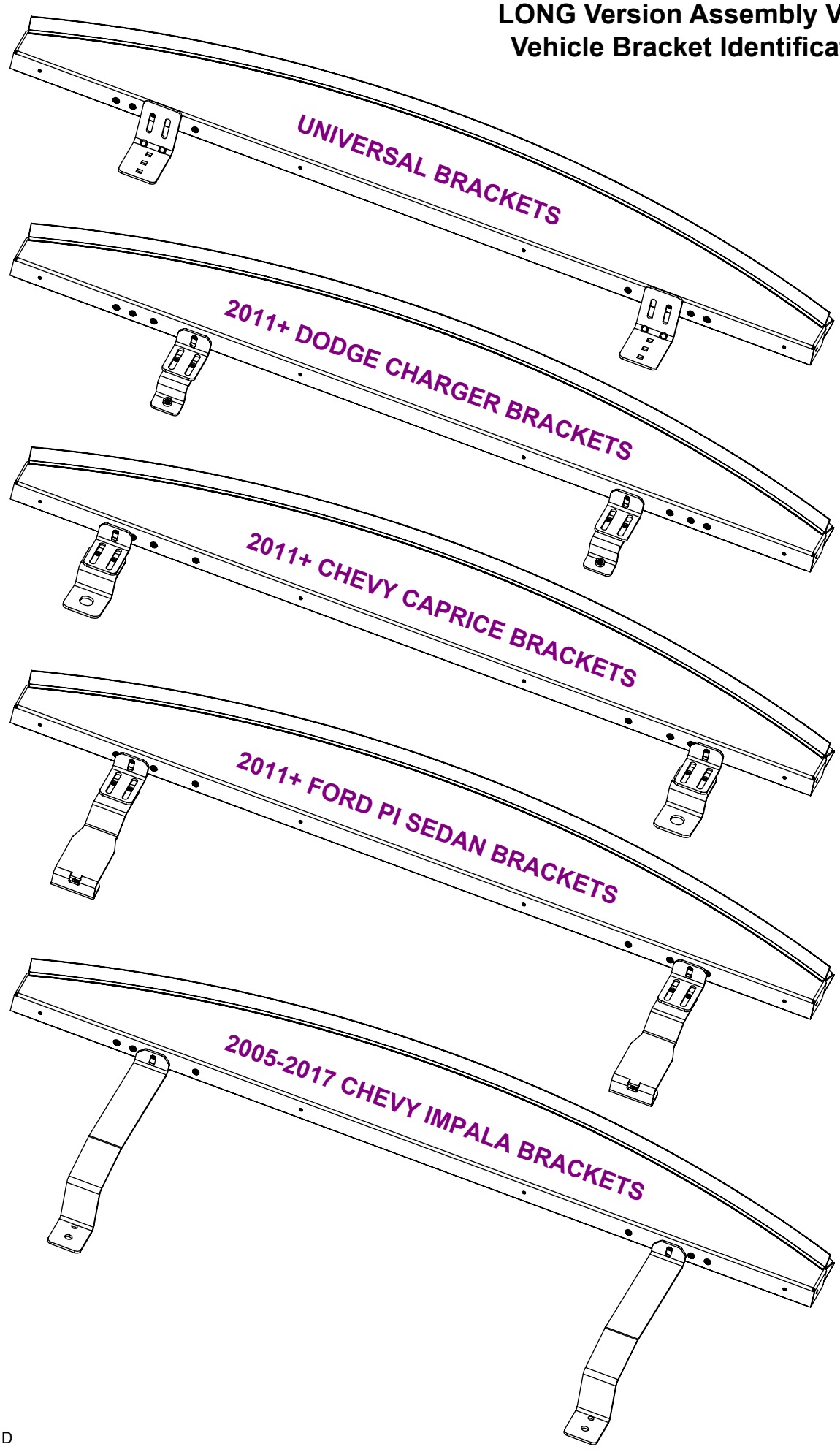

SHORT & MINI Version Assembly Views
Vehicle Bracket Identification

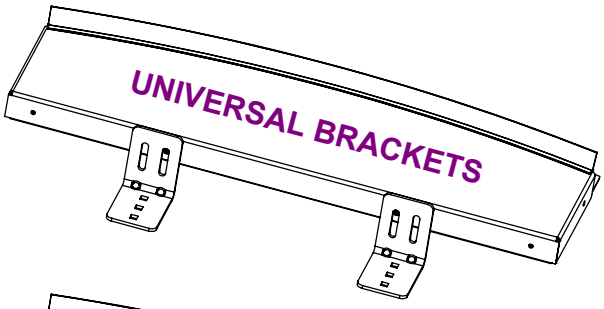

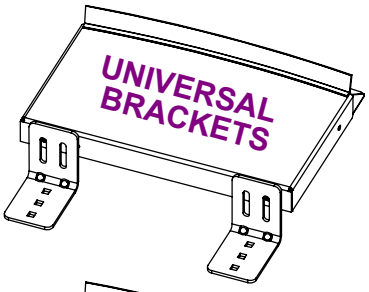

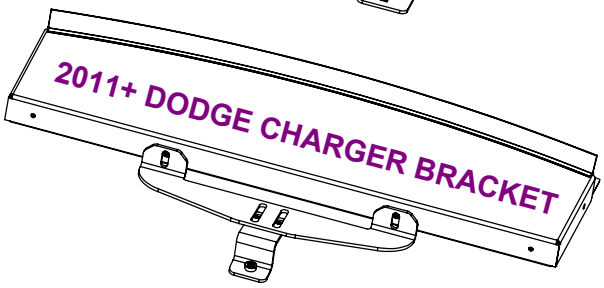

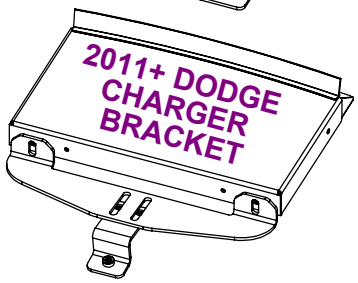

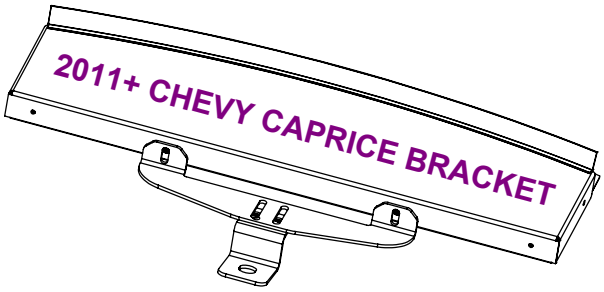

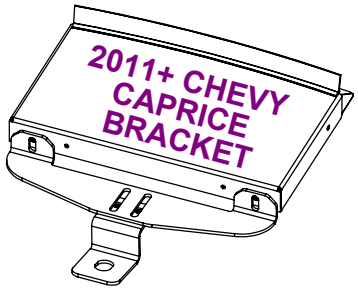

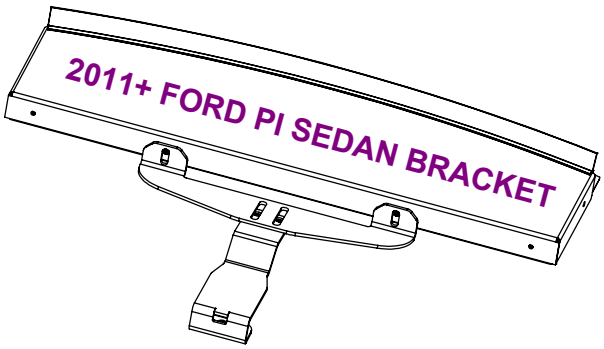

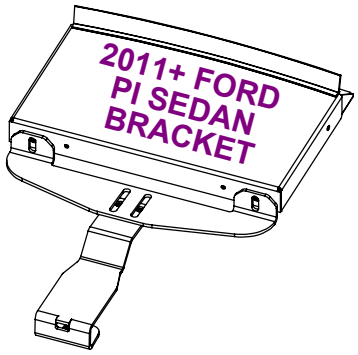

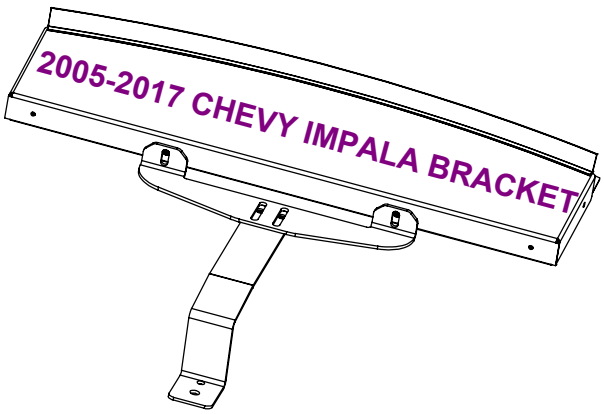

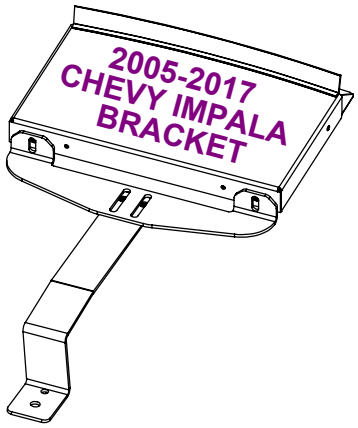

WARNING!

<u>Caution!</u> When drilling into any vehicle surface, make sure that the area is free from any electrical wires, fuel lines, sensors, vehicle upholstery, etc, that could be damaged.

Installation Instructions: 2011+ Dodge Charger

Step 1 From inside the trunk of the vehicle locate & remove the (6) Christmas Tree Fasteners which hold the upper fiber trunk liner in place (see Page 7 Figure 1). Remove the fiber trunk liner and set it aside (see Page 7 Figure 2).

Step 2 Position the WingMan Flex (LONG VERSION SHOWN) in the rear package tray area & determine the desired routing of the cable to the trunk or where ever the final location of the cable is to be (see Page 7 Figure 3). **Note: It is highly recommended to route the cable directly in line with the cable exit of the WingMan Flex through the interior fabric & sheet metal of the rear package tray & into the vehicle's trunk. This keeps the cable out of passengers reach. Drill a clearance hole for the cable directly through from inside the trunk of the vehicle. Note: To avoid damage to the WingMan Flex or the vehicle wiring move the WingMan Flex out of the way temporarily & make sure any OEM wiring is out of the way when drilling the cable clearance hole! Route the cable through the hole, pull the slack out of the cable, & reposition the WingMan Flex before going to the next step.**

Step 3 - LONG VERSION Remove the vehicle's (2) (driver & passenger) outer plastic child restraint covers (see Page 7 Figure 4).
Step 3 - SHORT & MINI VERSION Remove the center child restraint cover only. The SHORT & MINI Versions require only one bracket set in the center of the vehicle.

Step 4 Position the supplied Dodge Charger Mounting Bracket/s as required for the version you have in the rear area of the child restraint pocket & line up the threaded hole in the Pemserts of the Mounting Bracket with the existing holes in the vehicle's Sheetmetal (see Page 7 Figure 5). **Note: One of the Mounting Bracket flanges has (2) threaded Pemserts and the other has a single one. The flange that has the single Pemsert goes into the child restraint pocket.**

Step 5 From inside the vehicle's trunk, thread a supplied 1/4"-20 X 5/8" Phillips Pan Head Machine Screw with an internal tooth lock washer through the existing hole in the child restraint area & into the threaded hole in the Pemsert on the Dodge Charger Mounting Bracket (see Page 7 Figure 6). Leave the screws just slightly loose. For the LONG Version of the Unit, Repeat this step for both sides. **Note: It is helpful to have an assistant hold the WingMan's Mounting Bracket in location to prevent movement while you are threading the screws in.**

Step 6 Position a supplied Slotted Mounting Bracket - **LONG VERSION** or a Slotted Bridge Mounting Bracket - **SHORT & MINI VERSION** & thread (2) supplied 1/4"-20 X 1/2" Phillips Pan Head Machine Screws with (2) internal tooth lock washers through the slots in the brackets and into the threaded holes in the Dodge Charger Mounting Bracket installed in step 5 (see Page 7 Figure 7 - **LONG VERSION** & Figure 7A - **SHORT & MINI VERSION**). Leave the screws just slightly loose. Repeat this step for the other side for the LONG Version.

Step 7 Center the WingMan Flex left to right in the vehicle, align the bracket assemblies, & thread a supplied 1/4"-20 X 1/2" Phillips Pan Head Machine Screw with an internal tooth lock washer through the mounting slots in the Slotted Mounting Brackets (**LONG VERSION)** or Slotted Bridge Bracket **(SHORT & MINI VERSION**) & into the closest threaded holes in the WingMan's outer Panel (see Page 7 Figure 8 - **LONG VERSION** & Figure 8A - **SHORT & MINI VERSION**). Repeat this step for the other side.

Step 8 From inside the trunk tighten the 1/4"-20 X 5/8" Phillips Pan Head Screw/s (see Page 7 Figure 9).

Step 9 Make any final adjustments of the unit's position, push it back against the rear window, & tighten all of the 1/4"-20 X 1/2" Phillips Pan Head Screws that fasten the WingMan Mounting Brackets together (see Page 7 Figure 10 - **LONG VERSION** & Figure 10A - **SHORT & MINI VERSION**). **Note: Caution!!! Do not push the unit too hard against the rear window. The unit only needs to just touch the glass enough to fold the gasket flange back & block out as much flash back light as possible. A broken rear window can result if the unit is pushed too tight against the glass!**

Step10 Adjust to level the unit and tighten the 1/4"-20 X 1/2" Phillips Pan Head Screws that fasten the Slotted Mounting Brackets or the Slotted Bridge Mounting Bracket to the WingMan's Outer Panel (see Page 7 Figure 11 - **LONG VERSION** & Figure 11A - **SHORT & MINI VERSION**).

Step11 Reposition the vehicle's fabric upper trunk liner and replace the Christmas Tree Fasteners.

Step12 To replace the plastic child restraint covers you will have to trim the covers to clear the WingMan's Mounting Brackets then re install the covers.

FIGURE 1

FIGURE 2

FIGURE 3

FIGURE 4

FIGURE 5

FIGURE 6

FIGURE 7 - LONG VERSION

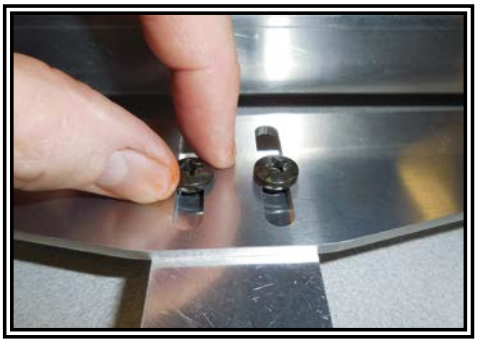

FIGURE 7A - SHORT & MINI VERSIONS

FIGURE 8 - LONG VERSION

FIGURE 8A - SHORT & MINI VERSIONS

FIGURE 9

FIGURE 10 - LONG VERSION

FIGURE 10A - SHORT & MINI VERSIONS

FIGURE 11 - LONG VERSION

FIGURE 11A - SHORT & MINI VERSIONS

Installation Instructions: 2011+ Ford PI Sedan

Step 1 From inside the trunk of the vehicle locate & remove the (6) Christmas Tree Fasteners which hold the upper fiber trunk liner in place (see Page 9 Figure 1). Remove the fiber trunk liner and set it aside (see Page 9 Figure 2).

Step 2 Position the WingMan Flex (LONG VERSION SHOWN) in the rear package tray area & determine the desired routing of the cable to the trunk or where ever the final location of the cable is to be (see Page 9 Figure 3). **Note: It is highly recommended to route the cable directly in line with the cable exit of the WingMan Flex through the interior fabric & sheet metal of the rear package tray & into the vehicle's trunk. This keeps the cable out of passengers reach. Drill a clearance hole for the cable directly through from inside the trunk of the vehicle. Note: To avoid damage to the WingMan Flex or the vehicle wiring move the WingMan Flex out of the way temporarily & make sure any OEM wiring is out of the way when drilling the cable clearance hole! Route the cable through the hole, pull the slack out of the cable, & reposition the WingMan Flex before going to the next step.**

Step 3 - LONG VERSION Remove the (2) (driver & passenger) outer plastic child restraint covers by prying the cover retention tab inward as shown on Page 9 in Figure 4 so that the covers can be removed. Set the (2) outer plastic child restraint covers aside.
Step 3 - SHORT & MINI VERSION Remove the center child restraint cover only. The SHORT & MINI Versions require only one bracket set in the center of the vehicle.

Step 4 Position the supplied Ford PI Sedan Mounting Bracket/s as required for the version you have in the rear area of the child restraint pocket & line up the threaded hole in the Pemserts of the Mounting Bracket with the existing holes in the vehicle's Sheetmetal (see Page 9 Figure 5). **Note: Make absolutely sure there is no foam insulation between the bracket and the vehicles sheet metal or the final assembly will be out of alignment.**

Step 5 From inside the vehicle's trunk, thread a supplied 1/4"-20 X 5/8" Phillips Pan Head Machine Screw with an internal tooth lock washer through the existing hole in the child restraint area & into the threaded hole in the Pemsert on the Ford PI Sedan Mounting Bracket (see Page 9 Figure 6). Leave the screws just slightly loose. For the LONG Version of the Unit, Repeat this step for both sides. **Note: It is helpful to have an assistant hold the WingMan's Mounting Bracket in location to prevent movement while you are threading the screws in.**

Step 6 Position a supplied Slotted Mounting Bracket - **LONG VERSION** or a Slotted Bridge Mounting Bracket - **SHORT & MINI VERSION** & thread (2) supplied 1/4"-20 X 1/2" Phillips Pan Head Machine Screws with (2) internal tooth lock washers through the slots in the brackets and into the threaded holes in the Ford PI Sedan Mounting Bracket installed in step 5 (see Page 9 Figure 7 - **LONG VERSION** & Figure 7A - **SHORT & MINI VERSION**). Leave the screws just slightly loose. Repeat this step for the other side for the LONG Version.

Step 7 Center the WingMan Flex left to right in the vehicle, align the bracket assemblies, & thread a supplied 1/4"-20 X 1/2" Phillips Pan Head Machine Screw with an internal tooth lock washer through the mounting slots in the Slotted Mounting Brackets (**LONG VERSION)** or Slotted Bridge Bracket **(SHORT & MINI VERSION**) & into the closest threaded holes in the WingMan's outer Panel (see Page 9 Figure 8 - **LONG VERSION** & Figure 8A - **SHORT & MINI VERSION**). Repeat this step for the other side.

Step 8 From inside the trunk tighten the 1/4"-20 X 5/8" Phillips Pan Head Screw/s (see Page 9 Figure 9).

Step 9 Make any final adjustments of the unit's position, push it back against the rear window, & tighten all of the 1/4"-20 X 1/2" Black Zinc Plated Phillips Pan Head Screws that fasten the WingMan Mounting Brackets together (see Page 9 Figure 10 - **LONG VERSION** & see Page 10 Figure 10A - **SHORT & MINI VERSION**). **Note: Caution!!! Do not push the unit too hard against the rear window. The unit only needs to just touch the glass enough to fold the gasket flange back & block out as much flash back light as possible. A broken rear window can result if the unit is pushed too tight against the glass!**

Step10 Adjust to level the unit and tighten the 1/4"-20 X 1/2" Black Zinc Plated Phillips Pan Head Screws that fasten the Slotted Mounting Brackets or the Slotted Bridge Mounting Bracket to the WingMan's Outer Panel (see Page 10 Figure 11 - **LONG VERSION** & Figure 11A - **SHORT & MINI VERSION**).

Step11 Reposition the vehicle's fabric upper trunk liner and replace the Christmas Tree Fasteners.

Installation Instructions 2011+ Ford PI Sedan Continued Next Page.

Installation Instructions: Cont. 2011+ Ford PI Sedan

Step12 Replace the vehicle's plastic child restraint covers by slipping the forward facing part of the child restraint covers down into the hole in the vehicle's fabric package tray first and then snapping the rear tab of the vehicle's plastic child restraint covers down onto the rectangular tab on the WingMan's Mounting Bracket until it "snaps" in place (SeePage 10 Figure 12). Then while pushing down on the vehicle's plastic child restraint covers pry up the vehicle's fabric package tray on each side of the restraint covers so that the foam engages above the retention tabs on each side of the child restraint covers as shown in Figure 4 below.

FIGURE 1

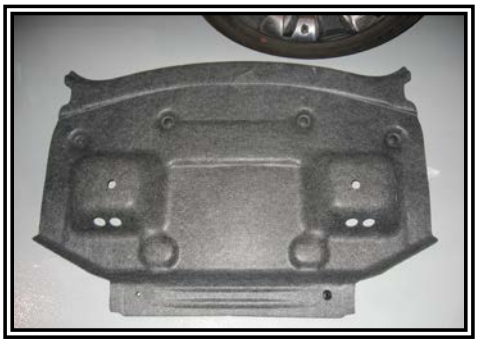

FIGURE 2

FIGURE 3

FIGURE 4

FIGURE 5

FIGURE 6

FIGURE 7 - LONG VERSION

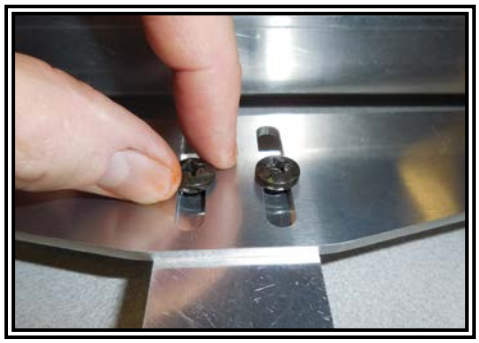

FIGURE 7A - SHORT & MINI VERSIONS

FIGURE 8 - LONG VERSION

FIGURE 8A - SHORT & MINI VERSIONS

FIGURE 9

FIGURE 10 - LONG VERSION

Installation Instructions: Cont. 2011+ Ford PI Sedan

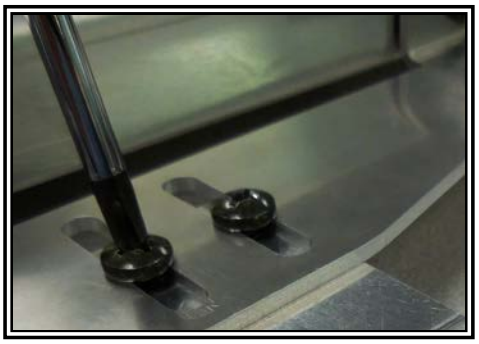

FIGURE 10A - SHORT & MINI VERSIONS

FIGURE 11 - LONG VERSION

FIGURE 11A - SHORT & MINI VERSIONS

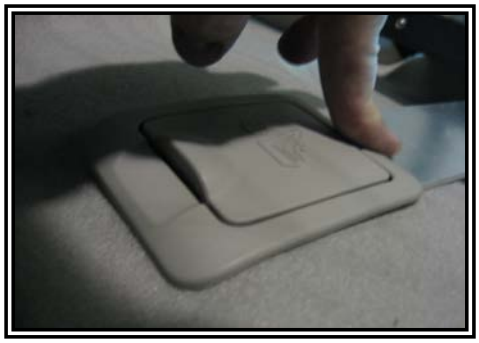

FIGURE 12

Installation Instructions: Universal Brackets

The WingMan Flex can be ordered with a Universal Bracket Kit. The Universal kit includes (2) 90 Degree Universal Mounting Brackets (See Individual Mounting Bracket Descriptions on page 3). These brackets can be bolted to the Outer Panel of the WingMan Flex and modified as needed to mount the unit. The WingMan Flex must be hard mounted to the sheet metal of the vehicle to prevent injury to passengers in the event of a collision. It is the installers responsibility to ensure the product is mounted securely. Make sure proper support is provided between the vehicles sheet metal and the fiber/fabric of the package tray area as in many cases there is a substantial air gap between them. In some cases you will need to self fabricate brackets to adapt the WingMan Flex to your vehicle. **Note: Caution!!! When installing the unit do not push it too hard against the rear window. The unit only needs to just touch the glass enough to fold the gasket flange back & block out as much flash back light as possible. A broken rear window can result if the unit is installed too tight against the glass!**

Installation Instructions: 2011+ Chevy Caprice

Step 1 Position the WingMan Flex (LONG VERSION SHOWN) in the rear package tray area to determine the desired routing of the cable into the trunk or where ever the final location of the cable is to be (see Page 12 Figure 1). **Note: The best and safest cable routing is to drill a clearance hole for the cable directly through the sheet metal and the interior fabric of the package tray area from inside the trunk of the vehicle directly in line with the cable exit of the WingMan. This keeps the cable out of a passengers reach Note: Move the WingMan out of the way temporarily and make sure any OEM wiring is out of the way so you don't damage the WingMan or the wiring when drilling the cable clearance hole! Route the cable through the hole, pull the slack out of the cable, and reposition the WingMan before going to the next step.**

Step 2 - LONG VERSION Remove the (2) (driver & passenger) outer plastic child restraint brackets in the rear package tray area behind the rear seat by opening the hinged bolt covers (see Page 12 Figures 2 & 3) & removing the 8mm child restraint mounting bolts with a 1/2" SAE or 13mm metric wrench (see Page 12 Figure 4). Do not remove the steel spacer and the cardboard washer from the brackets.
Step 2 - SHORT & MINI VERSION Remove the center child restraint only. The SHORT & MINI Versions require only one bracket set in the center of the vehicle.

Step 3 While pushing on the head of the 8mm child restraint bolt/s so that the under side of the bolt head is seated in the plastic bracket, push the steel spacer & cardboard washer back against the vehicle's plastic child restraint bracket/s (See Page 12 Figure 5). Position the plastic child restraint bracket/s onto the supplied Chevy Caprice Mounting Bracket/s as required for the WingMan Flex version you are installing, then position the bracket assembly/s into position over the vehicle's child restraint location/s & thread the 8mm child restraint bolt back into the existing hole in the vehicle (See Page 12 Figure 6). The threaded Pemserted flange of the bracket will face the rear of the vehicle. Leave the bolts just slightly loose at this time.

Step 4 Position a supplied Slotted Mounting Bracket - **LONG VERSION** or a Slotted Bridge Mounting Bracket - **SHORT & MINI VERSION** & thread (2) supplied 1/4"-20 X 1/2" Phillips Pan Head Machine Screws with (2) internal tooth lock washers through the slots in the brackets & into the threaded holes in the Chevy Caprice Mounting Bracket installed in step 3 (see Page 12 Figure 7 - **LONG VERSION** & Figure 7A - **SHORT & MINI VERSION**). Leave the screws just slightly loose. Repeat this step for the other side for the LONG Version.

Step 5 Center the WingMan Flex left to right in the vehicle, align the bracket assemblies, & thread a supplied 1/4"-20 X 1/2" Phillips Pan Head Machine Screw with an internal tooth lock washer through the mounting slots in the Slotted Mounting Brackets (**LONG VERSION)** or Slotted Bridge Bracket **(SHORT & MINI VERSION**) & into the closest threaded holes in the WingMan's outer Panel (see Page 12 Figure 8 - **LONG VERSION** & Figure 8A - **SHORT & MINI VERSION**). Repeat this step for the other side - LONG Version the other bracket flange - SHORT/MINI Version.

Step-6 Tighten the vehicle's 8mm child restraint bolt/s with a 1/2" SAE or 13mm metric wrench as (See Page 12 Figure 9).

Step 7 Make any final adjustments of the unit's position, push it back against the rear window, & tighten all of the 1/4"-20 Phillips Pan Head Screws that fasten the WingMan Mounting Brackets together (see Page 12 Figure 10 - **LONG VERSION** & Figure 10A - **SHORT & MINI VERSION**). **Note: Caution!!! Do not push the unit too hard against the rear window. The unit only needs to just touch the glass enough to fold the gasket flange back & block out as much flash back light as possible. A broken rear window can result if the unit is pushed too tight against the glass!**

Step 8 Adjust to level the unit and tighten the 1/4"-20 Phillips Pan Head Screws that fasten the Slotted Mounting Brackets or the Slotted Bridge Mounting Bracket to the WingMan's Outer Panel (see Page 12 Figure 11 - **LONG VERSION** & Figure 11A - **SHORT & MINI VERSION**).

Step-9 Snap the hinged bolt covers closed on the vehicle's plastic child restraint brackets.

FIGURE 1

FIGURE 2

FIGURE 3

FIGURE 4

FIGURE 5

FIGURE 6

FIGURE 7 - LONG VERSION

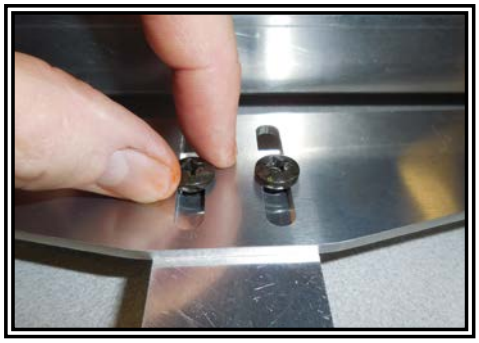

FIGURE 7A - SHORT & MINI VERSIONS

FIGURE 8 - LONG VERSION

FIGURE 8A - SHORT & MINI VERSIONS

FIGURE 9

FIGURE 10 - LONG VERSION

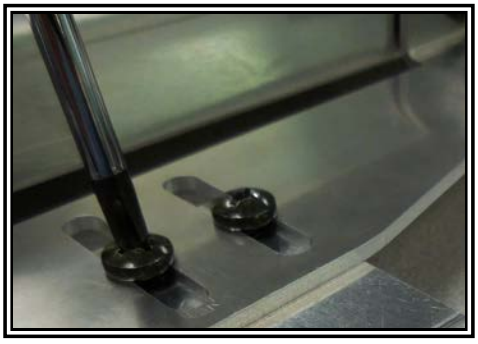

FIGURE 10A - SHORT & MINI VERSIONS

FIGURE 11 - LONG VERSION

FIGURE 11A - SHORT & MINI VERSIONS

Installation Instructions: 2005-2017 Chevy Impala

Step 1 Position the WingMan Flex in the rear package tray area & determine the desired routing of the cable to the trunk or where ever the final location of the cable is to be (see Page 14 Figure 1). **Note: It is highly recommended to route the cable directly in line with the cable exit of the WingMan Flex through the interior fabric & sheet metal of the rear package tray & into the vehicle's trunk. This keeps the cable out of passengers reach. Drill a clearance hole for the cable directly through from inside the trunk of the vehicle. Note: To avoid damage to the WingMan Flex or the vehicle wiring move the WingMan Flex out of the way temporarily & make sure any OEM wiring is out of the way when drilling the cable clearance hole! Route the cable through the hole, pull the slack out of the cable, & reposition the WingMan Flex before going to the next step.**

Step 2 - LONG VERSION Remove the (2) (driver & passenger) outer plastic child restraint covers & bezels as shown on Page 14 in Figure 2. Set the (2) covers & bezels aside.
Step 2 - SHORT & MINI VERSION Remove the center child restraint cover & bezel only. Note: The SHORT & MINI Versions require only one bracket set in the center of the vehicle.

Step 3 - LONG VERSION Move the fiber insulation out of the way enough to gain access to remove the (2) outer child restraint bracket/s by removing the 8mm child restraint mounting bolt/s with a 1/2" SAE or 13mm metric wrench (see Page 14 Figure 3).
Step 3 - SHORT & MINI VERSION Move the fiber insulation out of the way enough to gain access to remove the center child restraint bracket only by removing the 8mm child restraint mounting bolt with a 1/2" SAE or 13mm metric wrench (see Page 14 Figure 3). As stated in Step 2 above the SHORT & MINI Versions require only one bracket set in the center of the vehicle.

Step 4 Cut away the fiber insulation as shown on Page 14 Figure 4 to provide clearance for the WingMan Flex Mounting Brackets. **Note: Make sure the fiber insulation is cleared back enough that the WingMan Mounting Bracket will have a clear/clean mounting surface.**

Step 6 Position the vehicle's child restraint bracket/s on the supplied Impala Mounting Bracket/s as shown on Page 14 Figure 5. **LONG VERSION -** The Long Version brackets have slotted mounting flanges. **SHORT & MINI VERSION -** The SHORT & MINI Version has a Pemserted mounting flange. **Note: Refer to the Mounting Bracket Descriptions on Page 3 to be sure you have the correct brackets for the Impala WingMan Flex Version you are installing.**

Step 7 Position the WingMan Mounting Brackets with the vehicle's child restraint brackets back into the existing child restraint hole/s in the vehicle & thread the 8mm child restraint mounting bolt/ back into the threaded hole in the vehicles sheet metal (see threaded hole shown on Page 14 in Figure 4. Thread the bolt in just enough to get it started. Slip the plastic child restraint bezel over the Impala Mounting Bracket & snap it back into it's original location. Tighten the 8mm child restraint bolt/s until they are just slightly loose (See Page 14 Figure 6).

Step 8 - LONG VERSION Thread the supplied 1/4"-20 screws & internal tooth lock washers through the slots in the Impala Mounting Brackets & into the into the closest threaded holes in the WingMan Flex's outer Panel . Thread the screws in until they are just slightly loose (See Page 14 Figure 7).

Step-9 - LONG VERSION Center the WingMan in the rear window & tighten the vehicle's 8mm child restraint bolt with a 1/2" SAE or 13mm metric wrench as (See Page 14 Figure 6 again).

Step-10 - LONG VERSION Level the WingManFlex and tighten the 1/4"-20 screws with a phillips screwdriver as shown in on Page 14 Figure 8.

Step 8 - SHORT & MINI VERSION Position a supplied Slotted Bridge Mounting Bracket & thread (2) supplied 1/4"-20 X 1/2" Phillips Pan Head Machine Screws with (2) internal tooth lock washers through the slots in the brackets & into the threaded holes in the Chevy Impala Mounting Bracket installed in step 7 (see Page 14 Figure 9). Leave the screws just slightly loose.

Step 9 - SHORT & MINI VERSION Center the WingMan Flex left to right in the vehicle, align the bracket assembliy, & thread the supplied 1/4"-20 X 1/2" Phillips Pan Head Machine Screws with internal tooth lock washers through the mounting slots in both of the Slotted Bridge Bracket Flanges & into the threaded holes in the WingMan Flex's outer Panel (see Page 14 Figure 10).

Installation Instructions 2005-2017 Chevy Impala Continued Next Page.

Installation Instructions: Cont. - 2005-2017 Chevy Impala

Step 10 - SHORT & MINI VERSION Make any final adjustments of the unit's position, push it back against the rear window, & tighten all of the 1/4"-20 Phillips Pan Head Screws that fasten the WingMan Mounting Brackets together (see Below Figure 11). **Note: Caution!!! Do not push the unit too hard against the rear window. The unit only needs to just touch the glass enough to fold the gasket flange back & block out as much flash back light as possible. A broken rear window can result if the unit is pushed too tight against the glass!**

Step 11 - SHORT & MINI VERSION Adjust to level the unit & tighten the 1/4"-20 Phillips Pan Head Screws that fasten the Slotted Bridge Mounting Bracket to the WingMan's Outer Panel (see Below Figure 12).

Step-12 - ALL VERSIONS To replace the plastic child restraint covers you will have to trim the covers to clear the WingMan's Mounting Brackets then re install the covers.

FIGURE 1

FIGURE 2

FIGURE 3

FIGURE 4

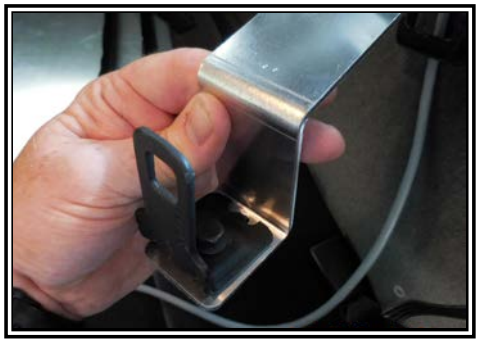

FIGURE 5

FIGURE 6

FIGURE 7 - LONG VERSION

FIGURE 8 - LONG VERSION

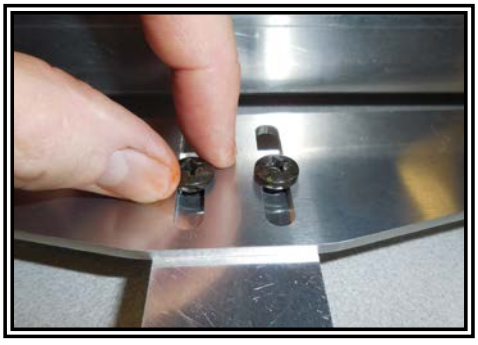

FIGURE 9 - SHORT & MINI VERSIONS

FIGURE 10 - SHORT & MINI VERSIONS

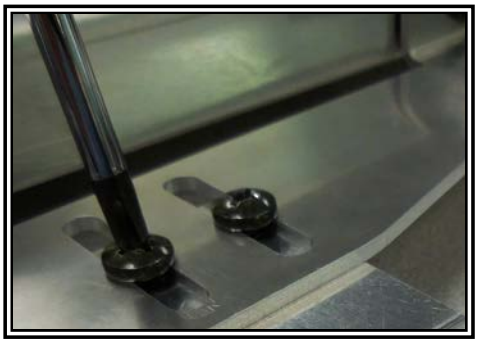

FIGURE 11 - SHORT & MINI VERSIONS

FIGURE 12 - SHORT & MINI VERSIONS

Important Wiring Notes:

1. Larger wires and tight connections will provide longer service life for components. For high current wires it is highly recommended that terminal blocks or soldered connections be used with heat shrink tubing to protect the connections.
2. Route wiring using grommets and sealant when passing through compartment walls. Minimize the number of splices to reduce voltage drop. **High ambient temperatures (e.g. under hood) will significantly reduce the current carrying capacity of wires, fuses,and circuit breakers.** All wiring should conform to the minimum wire size and other recommendations of the manufacturer and be protected from moving parts and hot surfaces. Looms, grommets, cable ties, and similar installation hardware should be used to anchor and protect all wiring.
3. Fuses or circuit breakers should be located as close to the power takeoff points as possible and properly sized to protect the wiring and devices.
4. Particular attention should be paid to the location and method of making electrical connections and splices to protect these points from corrosion and loss of conductivity.
5. Ground terminations should only be made to substantial chassis components, preferably directly to the vehicle battery.
6. Circuit breakers are very sensitive to high temperatures and will “false trip” when mounted in hot environments or operated close to their capacity.

Wiring Instructions:

It is advisable to leave an extra loop of cable when installing the light bar to allow for future changes or reinstallations. Connect the wires in the cable for the WingMan Flex Version you are installing as shown in the following diagrams.

Important! This unit is a safety device, and it must be connected to its own separate, fused power point to assure its continued operation should any other electrical accessory fail.

Wiring Instructions: Applies to all Multi Color, Single Color & Multi Color / Single Color Combinations except MINI Single Color Version. For MINI Single Color Version see top of Page 17.

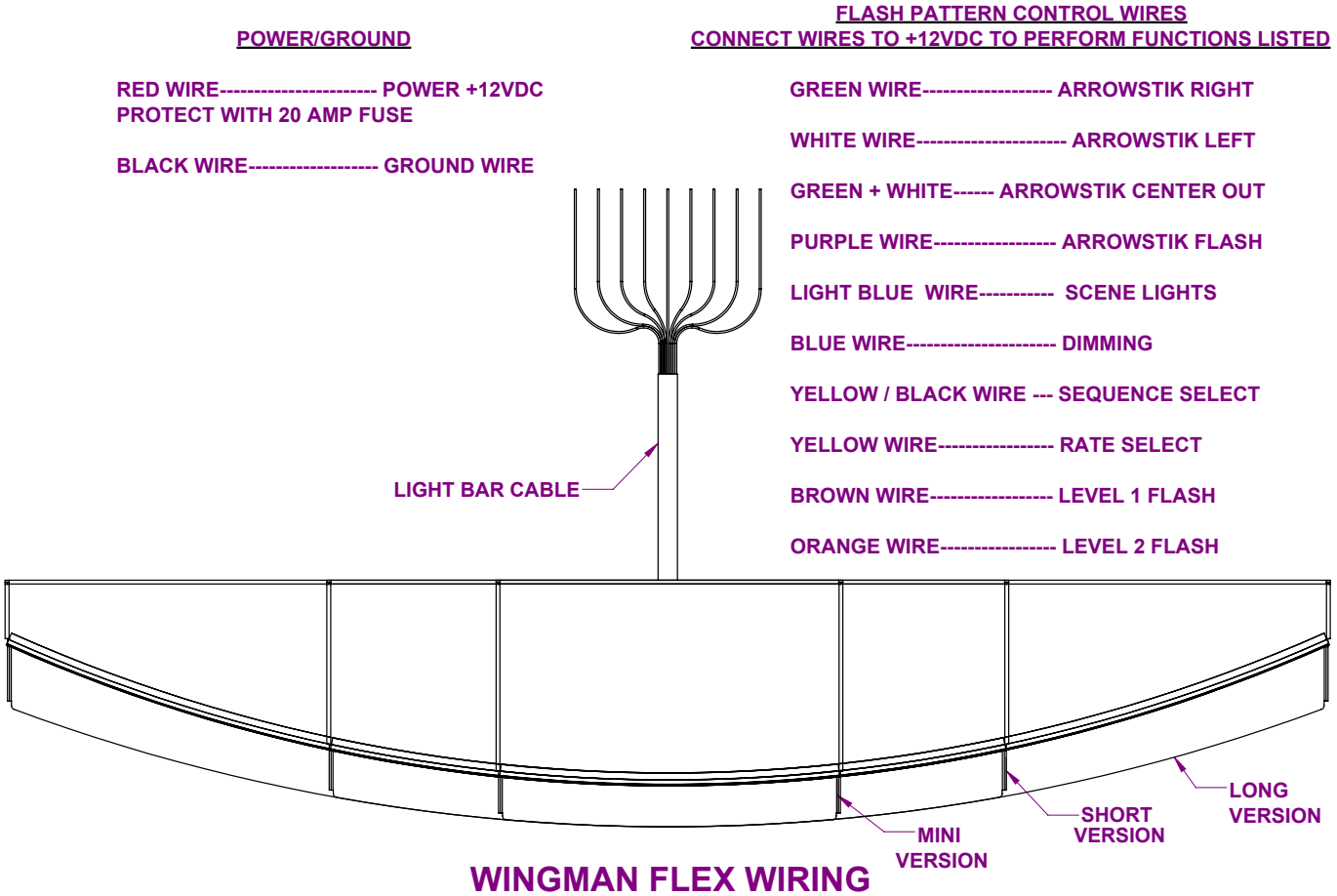

WINGMAN FLEX WIRING
MULTI COLOR, SINGLE COLOR & MULTI COLOR / SINGLE COLOR COMBINATIONS ALL VERSIONS EXCEPT MINI SINGLE COLOR VERSION
FOR MINI SINGLE COLOR VERSION SEE TOP OF PAGE 17

Wiring Instructions: WINGMAN FLEX Independant Flashing Units

ALL COLORED WIRES BELOW CONNECT TO +12VDC

BLACK WIRE CONNECTS TO -GROUND

"DO NOT CONNECT UNUSED WIRES TO POWER"

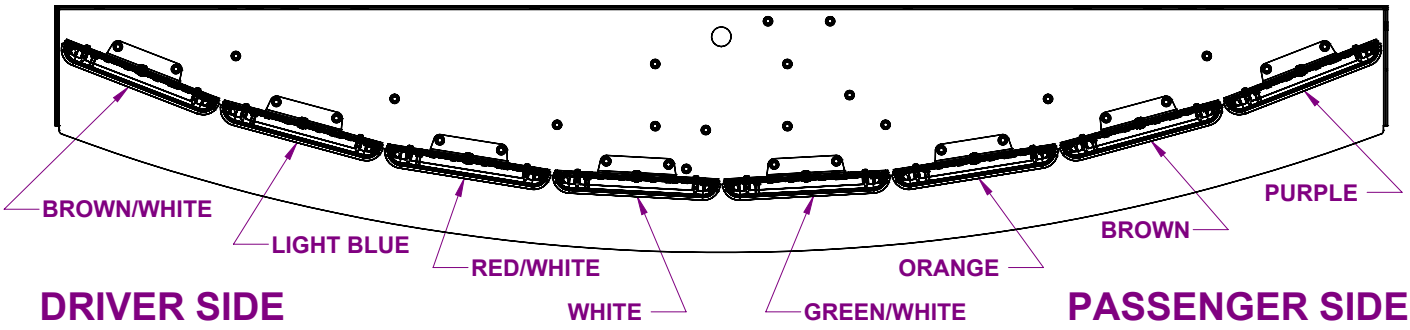

DRIVER SIDE PASSENGER SIDE

WIRING DIAGRAM
(8) LIGHT HEAD VERSION - SINGLE COLOR INDEPENDANT FLASHING

ALL COLORED WIRES BELOW CONNECT TO +12VDC

BLACK WIRE CONNECTS TO -GROUND

"DO NOT CONNECT UNUSED WIRES TO POWER"

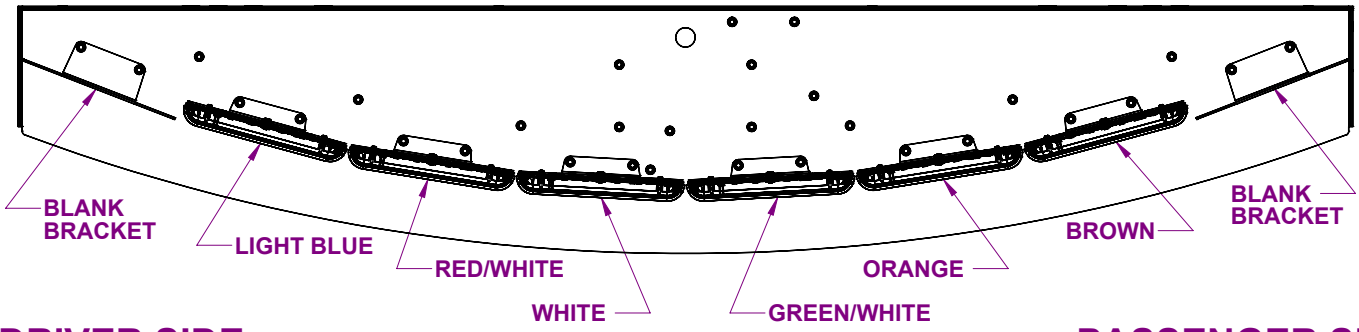

DRIVER SIDE PASSENGER SIDE

WIRING DIAGRAM
(6) LIGHT HEAD - SINGLE COLOR INDEPENDANT FLASHING VERSION

ALL COLORED WIRES BELOW CONNECT TO +12VDC

BLACK WIRE CONNECTS TO -GROUND

"DO NOT CONNECT UNUSED WIRES TO POWER"

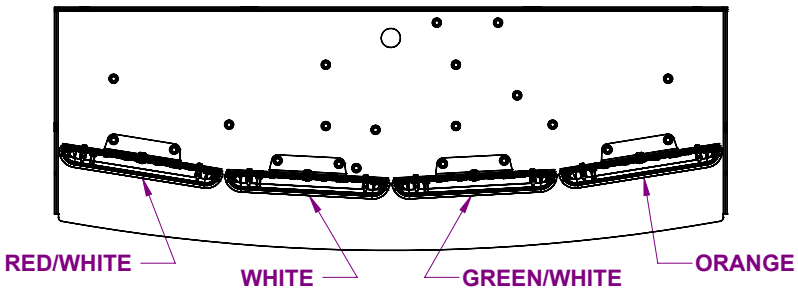

DRIVER SIDE PASSENGER SIDE

WIRING DIAGRAM
(4) LIGHT HEAD - SINGLE COLOR INDEPENDANT FLASHING VERSION

Wiring Instructions: Cont. WINGMAN FLEX Independant Flashing Units

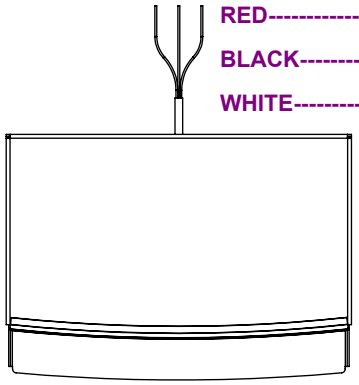

WIRING DIAGRAM
(2) LIGHT HEAD - SINGLE COLOR FLASHING VERSION &
(2) LIGHT HEAD - SINGLE COLOR INDEPENDANT FLASHING VERSION

Wiring Instructions: WINGMAN FLEX - NASLCH2 NarrowStik Controlled Units

LIGHT HEADS ARE GROUND SWITCHED - SEE NARROWSTIK INSTALLATION MANUAL

RED & RED/WHITE WIRES CONNECT TO BACK SIDE OF NARROWSTIK CONTROL HEAD +12VDC CONTROL HEAD POWER

COLORED WIRES CONNECT TO THEIR MATCHING COLOR LOCATIONS IN PLUG IN BACK SIDE OF NARROWSTIK CONTROL HD

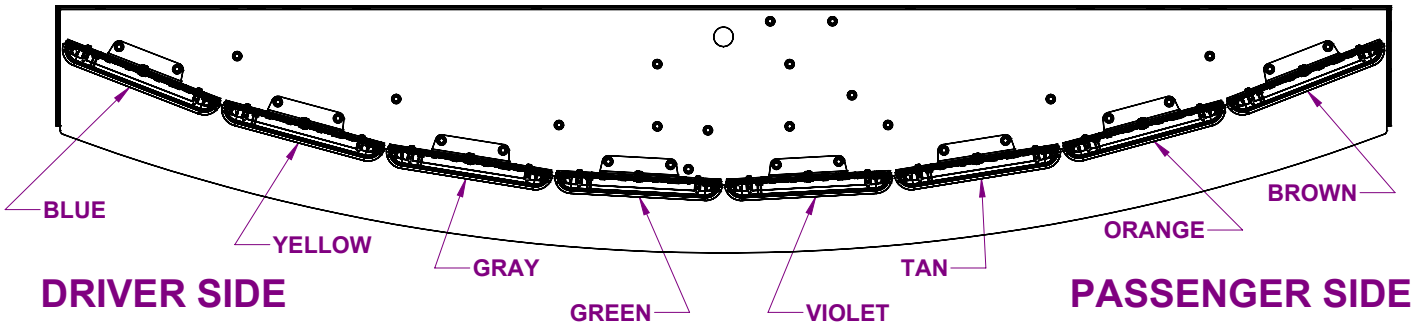

INTERNAL WIRING DIAGRAM
(8) LIGHT HEAD - SINGLE COLOR NARROWSTIK CONTROLLED VERSION &
(8) LIGHT HEAD - SINGLE COLOR NARROWSTIK CONTROLLED VERSION WITH
(6) LIGHT HEAD ARROWSTIK AND END FLASH

LIGHT HEADS ARE GROUND SWITCHED - SEE NARROWSTIK INSTALLATION MANUAL

RED & RED/WHITE WIRES CONNECT TO BACK SIDE OF NARROWSTIK CONTROL HEAD +12VDC CONTROL HEAD POWER

COLORED WIRES CONNECT TO THEIR MATCHING COLOR LOCATIONS IN PLUG IN BACK SIDE OF NARROWSTIK CONTROL HD

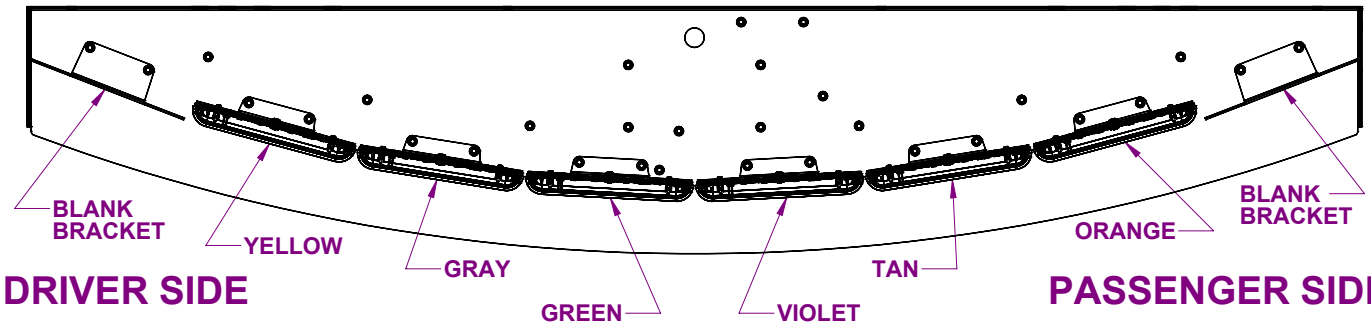

INTERNAL WIRING DIAGRAM
(6) LIGHT HEAD - SINGLE COLOR NARROWSTIK CONTROLLED VERSION

Fusing Instructions: WINGMAN FLEX Independant Flashing Units

LED Fusing Considerations

Although the average current draw per module is very low, due to the type of circuit used to power each module, the instantaneous peak current to a module can be significantly higher during low voltage conditions. To avoid prematurely blowing ATO style fuses or tripping breakers it is recommended the following rule-of-thumb be used to size fuses or breakers. This is especially important in lightbars with many LED modules running off a single fused source.

Minimum fuse size calculation: (See Wiring Diagrams page 14 & this page)

For LED 12 volt electrical current

1.5 X (number of 4, 6, & 9LED modules being fused) = Total Electrical Current at 12.8 VDC or

0.5 X (number of 3LED modules being fused) = Total Electrical Current at 12.8 VDC

LED MODULES

Operating Specifications for directional module:

Operating Voltage: 10-16 VDC, Reverse Polarity Protection

Current Draw : Flashing Module

Red/Amber - .25A avg @ 12.8 Volts

Blue/White - .4A avg @ 12.8 Volts

Steady Burn Module

Red/Amber - .5A avg @ 12.8 Volts

Blue/White - .8A avg @ 12.8 Volts

Available Colors - Red , Blue, Amber, and White

Caution! **This product contains high intensity LED devices. To prevent eye damage,DO NOT stare into the light beam at close range.**

Flash Pattern Instructions: WINGMAN FLEX Multi Color Units

INSTALLER NOTE:
FLASH RATE + FLASH SEQUENCE = FLASH PATTERN

Light Head Flash Sequences - Multi Color

LEFT / RIGHT (DEFAULT)	PRIMARY & SECONDARY PRIMARY ONLY **- LEVEL - 1 DEFAULT** SECONDARY ONLY PRIMARY W / SECONDARY POPS PRIMARY W / SECONDARY RANDOM
EVEN / ODD	PRIMARY & SECONDARY PRIMARY ONLY **- LEVEL - 2 DEFAULT** SECONDARY ONLY PRIMARY W / SECONDARY POPS PRIMARY W / SECONDARY RANDOM
RANDOM	PRIMARY & SECONDARY PRIMARY ONLY SECONDARY ONLY PRIMARY W / SECONDARY POPS PRIMARY W / SECONDARY RANDOM
CYCLE SEQUENCE RANDOM	PRIMARY & SECONDARY PRIMARY ONLY SECONDARY ONLY PRIMARY W / SECONDARY POPS PRIMARY W / SECONDARY RANDOM
ALL ON RANDOM	PRIMARY & SECONDARY
SWEEP LEFT / RIGHT	SECONDARY ONLY
NULL	ALL LIGHT HEADS OFF

Light Head Flash Rates - Multi Color

Double Flash-75 **- LEVEL - 2 DEFAULT**
Triple Flash-75
Quad Flash-75
Quint Flash-75
Double Flash-150
Triple Flash-150 **- LEVEL - 1 DEFAULT**
Quad Flash-150
Quint Flash-150
Triple Pop Flash-150
Quad Pop Flash-150
Single Flash-375
Cycle Rates

Scene Steady	ArrowStik Pattern	ArrowStik Speed
All Primary	Build **- DEFAULT**	0
All Secondary **- DEFAULT**	Build 3 Flash	1
	Travel 3 Flash	2
	Build / Collapse	3

ArrowStik Overrides All Other functions.
Scene Steady Overrides L1 & L2 Flashing.

Flash Pattern Instructions: WINGMAN FLEX Independant Flashing Units

Changing Flash Patterns

To change the flash patterns on the LED Light Heads, remove the mounting screws that attach the Cover to gain access to the printed circuit boards inside (see the exploded view on page 11). Momentarily short and release the pattern change prongs as shown below to change patterns. Carefully replace the cover and fasten cover mounting screws.

Note: Be extremely careful to replace the wiring such that you don't pinch a wire when you replace the cover. Test the unit to be sure that it works as intended.

1. Momentarily short and release to change patterns.

2. Hold for 5 seconds to reset the flash pattern to the first pattern.

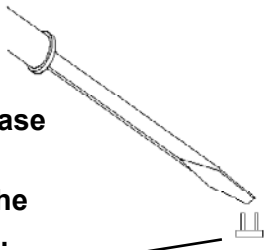

Directional Module Flash Pattern - Table 2

Cycle Flash-70 - (DEFAULT)	Variable Flash Single
NFPA Quad Flash-80	Cycle Flash-150
Quad Flash-70	Five Flash-150
Steady Burn	Quad Flash-150
Five Flash-70	Triple Flash-150
Triple Flash-70	Double Flash-150
Double Flash-70	Single Flash-150
Single Flash-70	Single Flash-250
Quad Pop Flash-70	Single Flash-375
Triple Pop Flash-70	

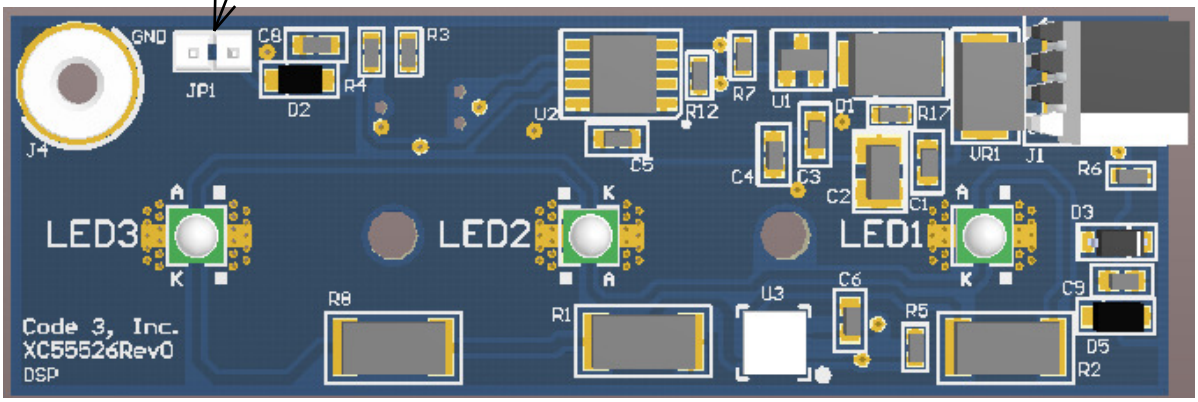

Torus 3LED PCB Shown

Flash Pattern Header for Torus

Troubleshooting

All WingMan Rear Bars are thoroughly tested prior to shipment. However, should you encounter a problem during installation or during the life of the product, follow the guide below for information on repair and troubleshooting. Additional information may be obtained from the factory technical help line at 314-996-2800.

TROUBLESHOOTING GUIDE

Note: LED modules must be replaced as a module. There are no user serviceable parts.

PROBLEM	QUESTIONS	POSSIBLE CAUSE	SOLUTION
LED module not operating when powered.	N/A	a. Bad power/ground connection. b. Defective module.	a. Fix connection. b. Replace module

Replacement Parts: WINGMAN FLEX Main Assembly

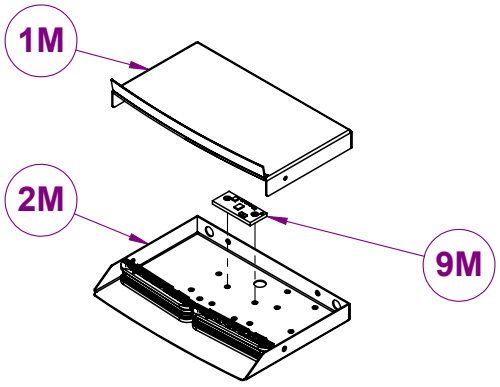

MINI VERSION

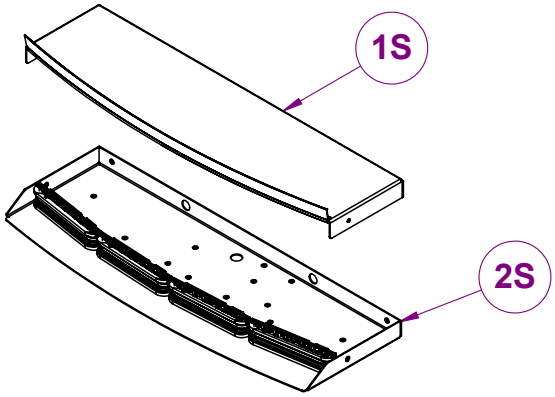

SHORT VERSION

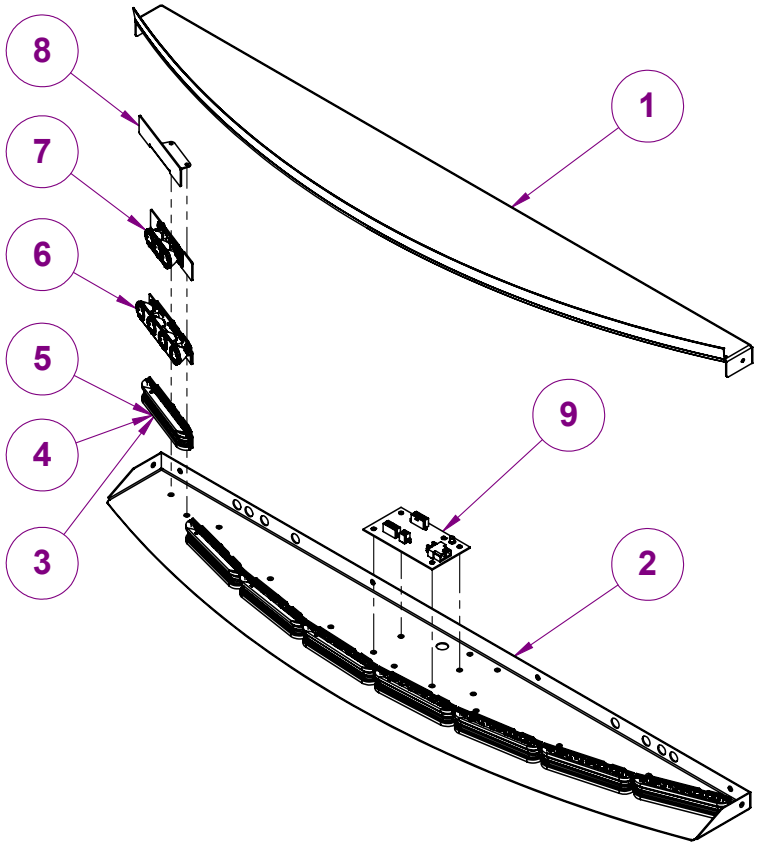

LONG VERSION

Reference Number	Part Description	Part Number	Quantity
1	Outer Panel LONG Version	155-0280-00	1
1S	Outer Panel SHORT Version	155-0285-00	1
1M	Outer Panel MINI Version	155-0284-00	1
2	Chassis LONG Version	220-0682-00	1
2S	Chassis SHORT Version	220-0681-00	1
2M	Chassis MINI Version	220-0680-00	1
3	18LED Multi Color Light Head Module	Contact Code 3, Inc for P/N	Up To 8
4	9LED Single Color Light Head Module	Contact Code 3, Inc for P/N	Up To 8
5	6LED Single Color Light Head Module	Contact Code 3, Inc for P/N	Up To 8
6	4LED Single Color Light Head Module	Contact Code 3, Inc for P/N	Up To 8
7	3LED Single Color Light Head Module	Contact Code 3, Inc for P/N	Up To 8
8	Blank Bracket	220-0710-00	Up To 2
9	Wingman Flex Multi Color CC Board	160-0494-00	1
9M	925 Flasher-Single Color MINI Version Only	T57198	1

Replacement Parts: WINGMAN FLEX Mounting Brackets

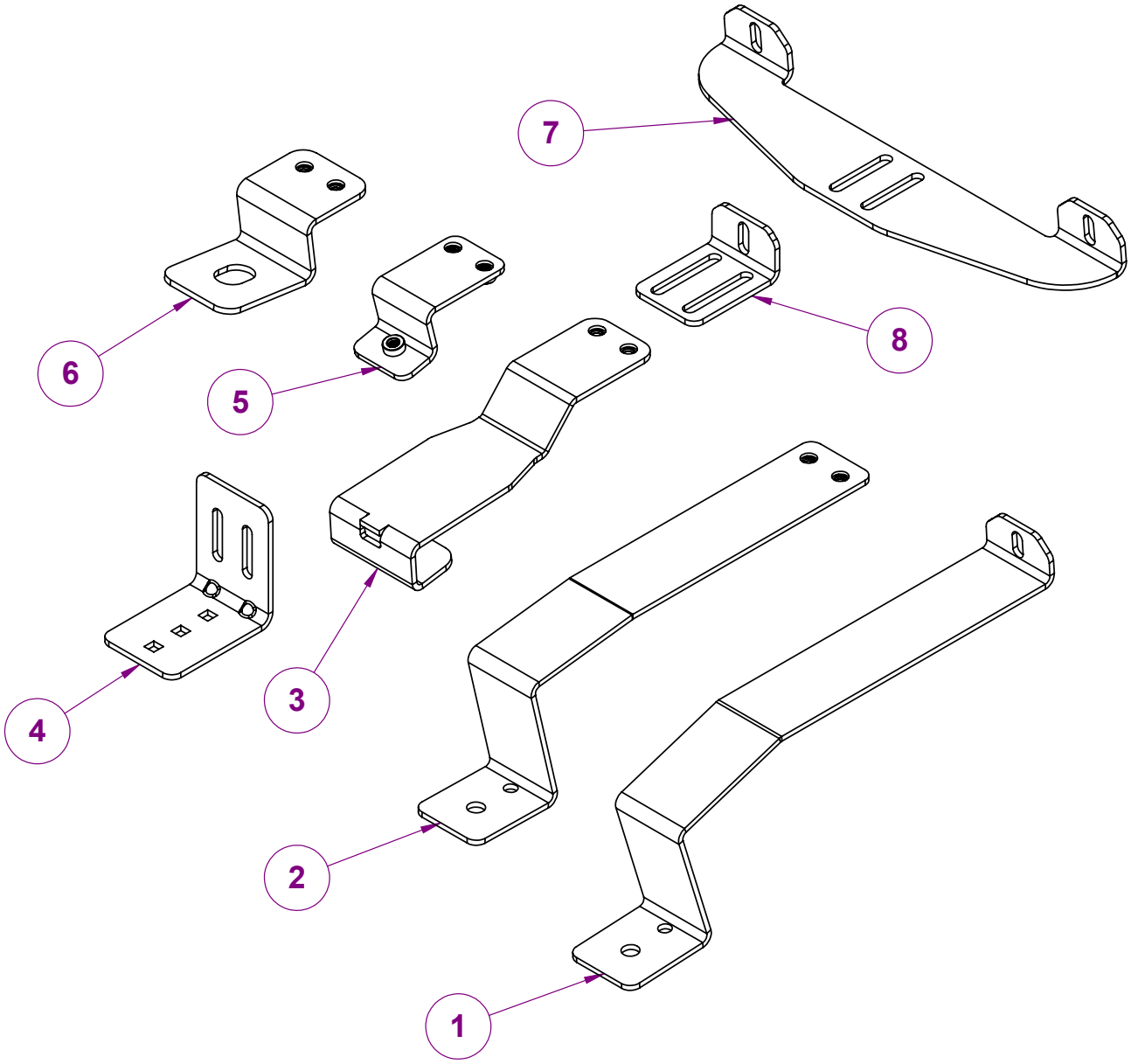

Ref No	Part Description	Part No	Qty-LONG	Qty-SHORT/MINI
1	Mounting Bracket Impala LONG Version	220-0690-00	2	N/A
2	Mounting Bracket Impala SHORT-MINI Versions	220-0689-00	N/A	1
3	Mounting Bracket PI Sedan-(All Versions)	220-0686-00	2	1
4	Mounting Bracket Universal-(All Versions)	220-0691-00	2	2
5	Mounting Bracket Dodge Charger-(All Versions)	220-0687-00	2	1
6	Mounting Bracket Chevy Caprice-(All Versions)	220-0688-00	2	1
7	Slotted Bridge Mounting Bracket-(SHORT/MINI ONLY)	220-0692-00	N/A	1
8	Slotted Mounting Bracket-(LONG ONLY)	220-0693-00	2	N/A

Notes:

Manufacturer Limited Warranty Policy:

Manufacturer warrants that on the date of purchase this product will conform to Manufacturer's specifications for this product (which are available from the Manufacturer upon request). This Limited Warranty extends for Sixty (60) months from the date of purchase.

DAMAGE TO PARTS OR PRODUCTS RESULTING FROM TAMPERING, ACCIDENT, ABUSE, MISUSE, NEGLIGENCE, UNAPPROVED MODIFICATIONS, FIRE OR OTHER HAZARD; IMPROPER INSTALLATION OR OPERATION; OR NOT BEING MAINTAINED IN ACCORDANCE WITH THE MAINTENANCE PROCEDURES SET FORTH IN MANUFACTURER'S INSTALLATION AND OPERATING INSTRUCTIONS VOIDS THIS LIMITED WARRANTY.

Exclusion of Other Warranties:

MANUFACTURER MAKES NO OTHER WARRANTIES, EXPRESS OR IMPLIED. THE IMPLIED WARRANTIES FOR MERCHANTABILITY, QUALITY OR FITNESS FOR A PARTICULAR PURPOSE, OR ARISING FROM A COURSE OF DEALING, USAGE OR TRADE PRACTICE ARE HEREBY EXCLUDED AND SHALL NOT APPLY TO THE PRODUCT AND ARE HEREBY DISCLAIMED, EXCEPT TO THE EXTENT PROHIBITED BY APPLICABLE LAW. ORAL STATEMENTS OR REPRESENTATIONS ABOUT THE PRODUCT DO NOT CONSTITUTE WARRANTIES.

Remedies and Limitation of Liability:

MANUFACTURER'S SOLE LIABILITY AND BUYER'S EXCLUSIVE REMEDY IN CONTRACT, TORT (INCLUDING NEGLIGENCE), OR UNDER ANY OTHER THEORY AGAINST MANUFACTURER REGARDING THE PRODUCT AND ITS USE SHALL BE, AT MANUFACTURER'S DISCRETION, THE REPLACEMENT OR REPAIR OF THE PRODUCT, OR THE REFUND OF THE PURCHASE PRICE PAID BY BUYER FOR NON-CONFORMING PRODUCT. IN NO EVENT SHALL MANUFACTURER'S LIABILITY ARISING OUT OF THIS LIMITED WARRANTY OR ANY OTHER CLAIM RELATED TO THE MANUFACTURER'S PRODUCTS EXCEED THE AMOUNT PAID FOR THE PRODUCT BY BUYER AT THE TIME OF THE ORIGINAL PURCHASE. IN NO EVENT SHALL MANUFACTURER BE LIABLE FOR LOST PROFITS, THE COST OF SUBSTITUTE EQUIPMENT OR LABOR, PROPERTY DAMAGE, OR OTHER SPECIAL, CONSEQUENTIAL, OR INCIDENTAL DAMAGES BASED UPON ANY CLAIM FOR BREACH OF CONTRACT, IMPROPER INSTALLATION, NEGLIGENCE, OR OTHER CLAIM, EVEN IF MANUFACTURER OR A MANUFACTURER'S REPRESENTATIVE HAS BEEN ADVISED OF THE POSSIBILITY OF SUCH DAMAGES. MANUFACTURER SHALL HAVE NO FURTHER OBLIGATION OR LIABILITY WITH RESPECT TO THE PRODUCT OR ITS SALE, OPERATION AND USE, AND MANUFACTURER NEITHER ASSUMES NOR AUTHORIZES THE ASSUMPTION OF ANY OTHER OBLIGATION OR LIABILITY IN CONNECTION WITH SUCH PRODUCT.

This Limited Warranty defines specific legal rights. You may have other legal rights which vary from jurisdiction to jurisdiction. Some jurisdictions do not allow the exclusion or limitation of incidental or consequential damages.

Product Returns:

If a product must be returned for repair or replacement*, please contact our factory to obtain a Return Goods Authorization Number (RGA number) before you ship the product to Code 3®, Inc. Write the RGA number clearly on the package near the mailing label. Be sure you use sufficient packing materials to avoid damage to the product being returned while in transit.

*Code 3®, Inc. reserves the right to repair or replace at its discretion. Code 3®, Inc. assumes no responsibility or liability for expenses incurred for the removal and /or reinstallation of products requiring service and/or repair.; nor for the packaging, handling, and shipping: nor for the handling of products returned to sender after the service has been rendered.

CODE 3®
10986 North Warson Road
St. Louis, MO 63114
Technical Service:
(314) 996-2800
c3_tech_support@code3esg.com
www.code3esg.com

A Division of ESG | www.eccogroup.com