AMERICAN ACADEMY OF DERMATOLOGY
GOOD SKIN KNOWLEDGE

OUR NAILS

Nail Care and Complications Handout, ages 11-13

Fill the blank spaces below with the correct part of the nail. Choose words from the word bank in the box.

MATRIX	CUTICLE	LUNULA

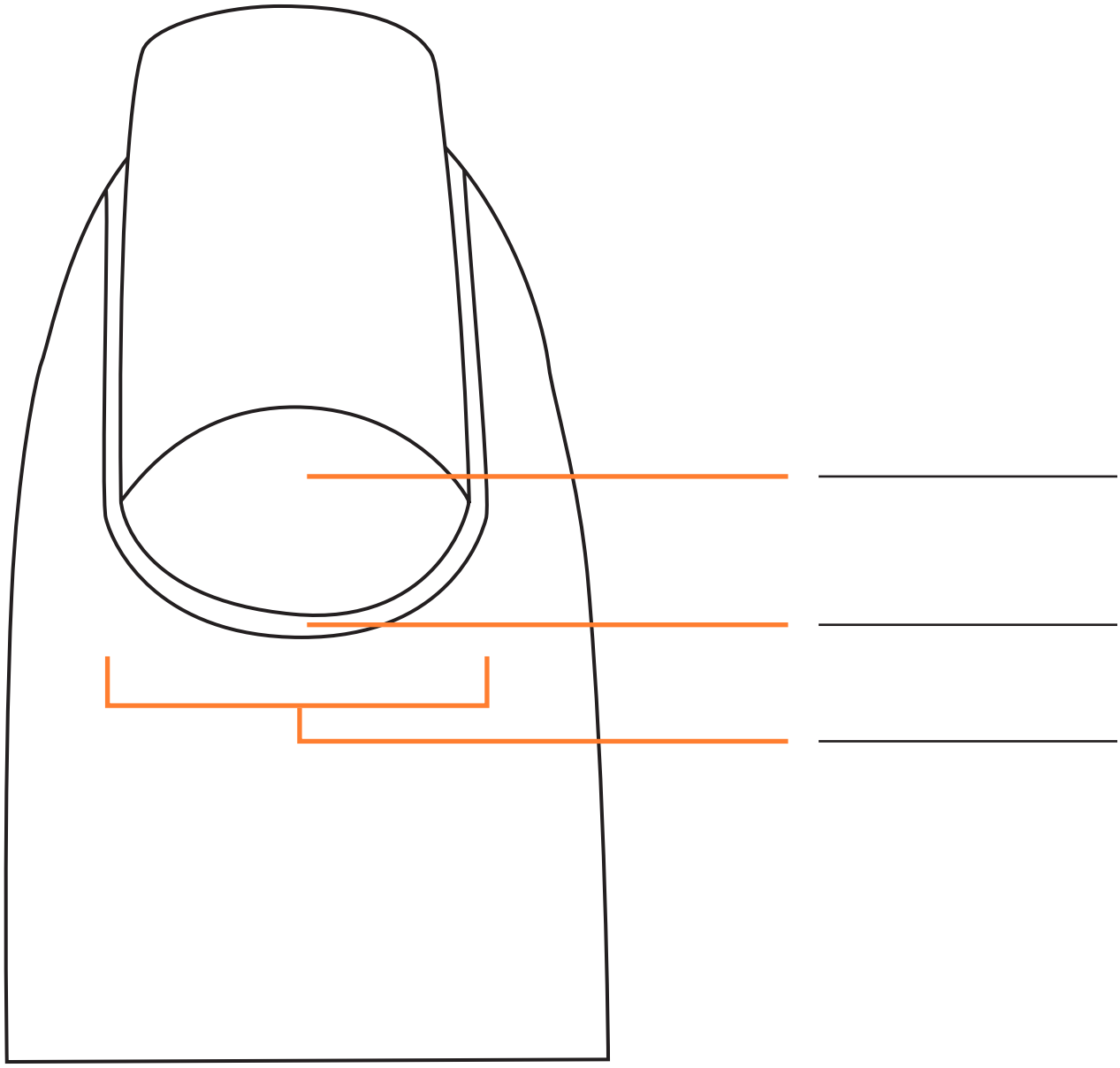

Copyright © 2014 American Academy of Dermatology. All rights reserved.
Reproduction or republication strictly prohibited without proir written permission.

AMERICAN ACADEMY OF DERMATOLOGY AAD 1938

Program made possible through a grant from Stiefel a GSK company