RIVIAN

R1S

Upfitting Guide

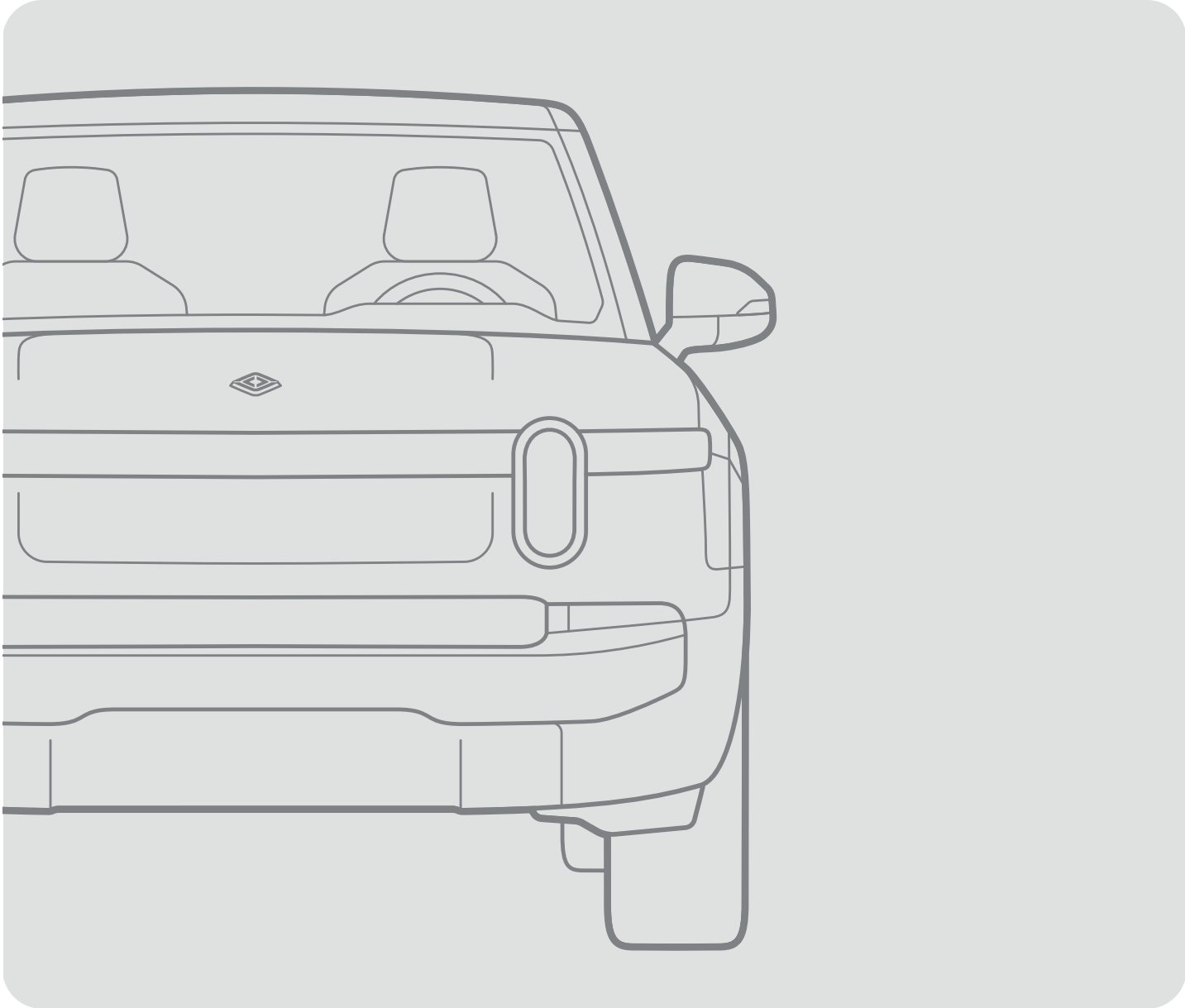

October 2026

United States

RIVIAN

© 2025-2026 Rivian Automotive, LLC. All rights reserved.

All information in this document and all Rivian software is subject to copyright and other intellectual property rights of Rivian Automotive, LLC, its affiliates, or its licensors. This material may not be modified, reproduced, or copied, in whole or in part, without the prior written permission of Rivian Automotive, LLC, its affiliates, or its licensors. Unless indicated otherwise, all trademarks are owned and registered by Rivian Automotive, LLC, its affiliates, or its licensors in the United States and/or other countries. Please visit https://www.rivian.com/legal/brand for Rivian's trademarks and service marks.

Software embedded or accessed by the vehicle may utilize open source software. Please visit https://www.rivian.com/legal/open-source for more information.

Some features may not be available depending on your vehicle configuration or region.

The images provided in this document are for illustrative purposes only. Depending on the product details and market region, the information in this document may appear slightly different from your product.

Contents

About This Guide 9
- Upfitters' Obligations 9
- Your Safety 9
- Feedback and Changes 10
- Symbols Used in This Guide 11

Essential Care Instructions 12
- Preventing Damage to the Rivian Vehicle 12
  - General Guidelines 12
  - Working Near Airbag and Safety Restraints Systems 13
  - Do Not Modify 13
  - Do Not Drill Areas 14
  - Drilling Around Brake Lines and High-Voltage Cables 15
- Painting the Vehicle 15
  - High-Voltage Battery Pack 15

Stop Charging in Case of an Emergency 16
- Shut Down the Emergency Power Off 16
- Remove the Charge Plug with a Key 17
- Remove the Charge Plug Without the Key 17
- Remove the Charge Plug Without the Key or Access to the Hood 17
- Manually Release the Charge Plug 18

Lift the Vehicle Safely 19
- Use Safe Lift Points 19

Vehicle Maintenance and Storage 20

Transport the Vehicle 21
- Prepare the Vehicle for Towing 21
- Connect to the Trailer Hitch 22
- Connect to the Tow Eye 23
- Lift the Rear Wheels 25
- Load the Vehicle onto the Tow Truck 25
- Vehicle Shipping Mode 27

Vehicle Dimensions and Packaging 28
- Overall Vehicle Specifications 28
- Storage Dimensions 30

Technical Limitations of the Vehicle 31
- Maximum Corner Loading Limit 31
- Towing Capacity 31

Approved Tire Manufacturer and Size ... 31
Center of Gravity ... 32
Vehicle Exterior ... 32
Weights ... 33
Payload ... 34
Additional Labeling When Adding Weight ... 34
Recommended Fastener Torque Values ... 35
Hard and Soft Joints ... 35
Tapping Screws (Plastic) ... 36
Typical Weight and Rating Values ... 37
Interior Overview ... 38
Interior Front View ... 38
Interior Rear View ... 39
Interior Cargo View ... 40
Cabin Interior Modifications ... 41
General Information ... 41
Recommended Fastener Torque Values ... 41
Don't Weld to these Parts ... 41
Keep Out Areas ... 42
Ventilation ... 42
Glass ... 42
Structural Components ... 42
Press Hardened Steel ... 43
Driver and Passenger Seats ... 44
Second-Row Seat ... 45
Third-Row Seat ... 47
Center Console ... 49
Exterior Overview ... 51
Driver Side Exterior View ... 51
Front and Rear Exterior View ... 52
Front and Rear Lights ... 53
Side Lights ... 55
Modifications to Exterior Body System ... 57
Exterior Panels and Trims ... 57
Recommended Fastener Torque Values ... 57
Doors ... 57
Roof ... 57
Glass Roof ... 57
Accessory Ports ... 58
Roof Crossbars ... 59

Roof Structure ... 59
Floor ... 60
Measurement from the Front Drive Unit ... 60
Measurement from the On-board Charging DC-DC Unit ... 61
Measurement from the Battery Pack ... 61
Crossmembers ... 62
Exterior Lighting ... 62
Windshield ... 63
Badging and Decals ... 63
Spare Tire Port ... 64
Front Trunk ... 65
Tow Hooks ... 66
Powertrain and Thermal System ... 67
Powertrain System Overview ... 67
Front and Rear Drive Units ... 67
High-Voltage (HV) Harness ... 67
Modifications to the Powertrain System ... 67
Do Not Modify ... 67
Thermal Management System Overview ... 68
Modifications to the Thermal System ... 69
Safety Warnings ... 69
Coolant Systems ... 72
Refrigerant System ... 72
Chassis System ... 73
Overview ... 73
Modifications to Chassis Systems ... 74
Safety Warnings ... 75
Suspension Systems ... 76
Subframe ... 76
Rear Axle ... 77
Brake Systems ... 77
Protection for Multi-Collision Braking ... 77
Hardware Components ... 78
Wheels and Tires ... 78
Wheel Alignment ... 78
Wheelbase ... 78
Chassis Frame ... 79
Steering System ... 79
Electrical System ... 80
Overview ... 80

High-Voltage Battery Removal ... 80
Electrical Precautions ... 80
Fire, Electrocution, and Inhalation Hazards ... 80
High-Voltage Lithium-Ion Battery Fires in Electrical Vehicles ... 80
Voltages ... 82
High-Voltage Battery ... 83
Electrical Connectors and Harnesses ... 83
Grease for Electrical Connectors ... 84
Emergency Response to Electrical Shock or Battery Exposure ... 84
High-Voltage Battery Storage Precautions ... 85
High-Voltage Battery Disposal Procedures ... 85
Vehicle Export Power ... 86
What is Electric Vehicle Power Export Equipment (EVPE)? ... 86
What is Required for EVPE? ... 86
High-Voltage Distribution System ... 87
Overview ... 87
Do Not Cut ... 88
Charge Port ... 88
Onboard Charger ... 89
DC-DC Converter ... 89
Energy Storage Systems ... 90
Overview ... 90
Energy Storage System Modifications ... 90
Safety Warnings ... 90
High-Voltage Battery Assembly ... 91
High-Voltage Battery Housing ... 91
High-Voltage Battery Busbars ... 91
High-Voltage Battery Internal Harnesses and Connectors ... 91
High-Voltage Battery Fuses and Switching ... 92
High-Voltage Battery Control Modules ... 92
High-Voltage Battery Thermal Management ... 92
High-Voltage Battery Energy Modules ... 92
Low-Voltage Systems ... 93
Overview ... 93
Low-Voltage Electronic Control Modules ... 93
Wipers and Washers ... 93
Communications Modules ... 93
Display Screens ... 94
Antennas ... 94
Exterior Audio ... 94

12 V Battery ... 94
Access and Authentication ... 94
Modifications to Low-Voltage Systems ... 95
General Information ... 95
Electromagnetic Compatibility ... 96
High-Voltage Battery to Skateboard Grounding Fasteners ... 97
12 V Battery ... 97
Disconnect the 12 V Battery Terminals ... 97
Connect to the 12 V Port ... 97
12 V Port and Power Characteristics ... 97
12 V Auxiliary Port Location ... 98
Tap into the 12 V Port ... 99
Autonomy ... 100
Overview ... 100
Cameras ... 100
Autonomy Control Modules and Sensors ... 100
Radar Sensors ... 101
Ultrasonic Sensors ... 101
Autonomy Sensors and Cameras ... 102
Front and Rear ... 102
Driver Side ... 103
Automatic Cameras ... 104
Autonomy View ... 104
Modifications to Cameras ... 105
Camera Calibration Requirements ... 105
Modifications to Autonomy Control Modules and Sensors ... 106
Modifications to Radar Sensors ... 107
Radar Calibration Requirements ... 107
Modifications to Ultrasonic Sensors ... 107
Occupant Protection Systems ... 108
Overview ... 108
Modifications to Occupant Protection Systems ... 108
Seatbelts ... 109
Crash Sensors ... 109
Airbags and Restraints ... 111
Restraints Control Module (RCM) ... 112
Front Crash Sensors ... 113
Side Safing Sensor ... 114
Driver Side Door Pressure Sensor ... 115
Standard Driver and Passenger Airbags ... 116

Standard Pelvis/Thorax Side Seat Airbags 116
Standard Curtain Airbags 117
Working with Airbag and Seat Belt Tensioner Units 117
Transporting and Storing Airbag Units and Seat Belt Tensioner Units 117
Safety Labels and Locations 118
Upfitter Feedback, Queries, and Questions 131

About This Guide

The *Rivian R1S Upfitting Guide* provides information to support modification and solution engineering for upfit partners.

This guide outlines Rivian's recommendations and requirements for maintaining the safety and integrity of Rivian vehicles during the upfit design and installation process.

Rivian recommends that upfit partners review this guide in full before performing any modifications or alterations to a vehicle. Take care during customer installation of equipment and wiring to ensure that all holes drilled in the body are corrosion protected, properly sealed and that vehicle wiring harnesses, piping, or other components have not been displaced or damaged.

All hole drilling, welding, or other modifications to the cargo walls, ceiling, and floor are the responsibility of the person(s) performing these operations. This person also assumes responsibility for the reliability and compliance to the relevant Federal Motor Vehicle Safety Standards (FMVSS) for the alterations and additions to the vehicle.

Adding non-dealer accessories or making modifications to the vehicle can affect vehicle performance, aerodynamics, safety, and overall top speed.

To ensure a successful and safe installation, consult the *Rivian Service Manual*, available through the Rivian Service Portal, for detailed instructions on general vehicle maintenance and repair. Be sure to refer to the Theory of Operations, which explains how the vehicle works and provides context for the modification statements outlined in this guide.

While Rivian is providing this guide to assist upfitters, Rivian does not warranty the aftermarket parts or materials used to perform the modifications, or the workmanship of the modifier. Conducting the modifications in this guide will not completely void your New Vehicle Limited Warranty. However, Rivian will exclude warranty coverage for defects or damage caused by the modifications, improper installation, unauthorized parts, improper service, or misuse of the vehicle.

Upfitters' Obligations

The National Highway Traffic Safety Administration (NHTSA) imposes certain requirements on those who alter or modify vehicles that have been previously certified by a manufacturer (Rivian), including ensuring that the vehicle meets all applicable Federal Motor Vehicle Safety Standards when delivered to a customer. Questions regarding NHTSA's requirements should be directed to the agency at www.nhtsa.gov or 1 (888) 327-4236.

Further, Rivian recommends that upfitters follow industry standards and best practices, such as those published by the Work Truck Association (NTEA).

Your Safety

Certain techniques described in this guide can be dangerous if performed incorrectly. Follow all safety messages carefully. These instructions are intended to be used only by qualified engineers and technicians, with proper personal protective equipment (PPE), supervision, and training.

Feedback and Changes

If you have any questions, please contact the Rivian Upfit Support Team at aftersalessupport@rivian.com. We welcome your feedback on the usefulness of this manual.

Following Rivian's policy of continuous improvement, vehicle specifications are subject to change.

Symbols Used in This Guide

The following are the meanings of symbols used in this guide.

DANGER

Risk of electrocution or electric shock

DANGER

Risk of major injury such as

- fire
- chemical or poison
- crushing
- maiming
- death

WARNING

Risk of minor injury

CAUTION

Risk of

- damage to vehicle or property
- data disruption
- voiding warranty

IMPORTANT

Instructions to successfully complete a task

NOTE

Useful information

Essential Care Instructions

Preventing Damage to the Rivian Vehicle

Perform regular maintenance services to prevent damage to the vehicle.

Please refer to the Rivian Support Center and the *Rivian Service Manual* for more information.

General Guidelines

Prevent squeaks and rattles:

- Secure all wiring and connectors.
- Use tapes that do not squeak against metal or plastic.

Prevent water leaks:

- Provide drip loops to prevent water leakage into the vehicle interior.
- Use appropriate wiring assemblies or grommets for passages from the outside to the inside of the vehicle.

Prevent damage from drilling:

- Take care when drilling near all wiring harnesses, especially high-voltage cables and components or near the high-voltage system to prevent damage or injury.
- Ensure fasteners are oriented away from the battery/high-voltage cables and low voltage harnesses.
- Do not install fasteners with the shank pointing toward the high-voltage battery.
- Use a drill depth gauge.

Before working on the vehicle:

1. Always disconnect the 12 V battery terminals.
2. Wait at least 5 minutes before starting work.
3. Replace any damaged or missing covers.
4. If adding additional batteries, protect the terminals to prevent metal-to-metal contact and arcing.

Working Near Airbag and Safety Restraints Systems

CAUTION

Work on airbag systems should be performed only by a Rivian-authorized facility.

When working near an airbag system:

- Turn off the 12 V system and disconnect the 12 V battery before starting work.
- Remove power to the low-voltage circuit that contains the Restraints Control Module (RCM) system (disconnect the RCM).
- When welding, connect the negative cable of the welder as close to the weld as possible.
- Never connect the negative cable of the welder near an airbag or control module.
- If welding or cutting near a control module, remove the control module first.

Do Not Modify

Do not modify any of these components:

- Axles
- Steering system
- Brakes
- Front or rear suspension, including springs and shock absorbers
- Wheel alignment from factory specs
- Crossmember structure from the front of the vehicle back to, and including, A-pillar, B-pillar, C-pillar, or D-pillar
- Rear portal, including the roof area
- Vehicle frame
- Battery or drivetrain components
- Vehicle cooling system
- High-voltage cables
- Exterior lighting components

Modification Notes

- If you modify the load-bearing structure, the total equivalent rigidity of the modified structure must equal that of the standard vehicle.
- Do not drill holes in or perform welding work on the A-pillar, B-pillar, C-pillar, or D-pillar.
- If you modify the side wall of the vehicle, the rigidity of the modified body must equal that of the standard vehicle.
- Do not modify or add equipment that could obstruct the deployment of inflatable restraints (airbags).
- Do not make modifications near the airbag crash sensors and Restraints Control Module (RCM).
- Do not change the wheel alignment from factory specs.

DANGER

Changes or reinforcements around the RCM can impact the deployment of the airbags, seat belt restraints, and high-voltage isolation, potentially causing uncontrolled deployments that may result in injury or death.

Do Not Drill Areas

Do not drill:

- Into the skateboard or its longitudinal midrail
- Into or weld onto the high-voltage battery pack
- Into or modify the bumper
- Into or modify the tophat front crossmember. This may affect frontal crash sensor crash detection.
- Into closed sections
- At the A and B-pillars, including the AB pillar flanges where the curtain airbag is resting
- In the upper or lower flange or chord of the longitudinal frame member
- Near load application points (for example, spring brackets)
- Near the front axle or rear axle supporting points
- Near the airbags
- Near the Autonomy systems (for example, front and rear sensors)

Additional Guidance

Do not ground welding equipment to the high-voltage battery, battery casing, or skateboard midrail.

Do not cut, drill, or weld any parts that are part of the load path in a crash. Do not add material in the crash zone.

When working near the crash sensors, be sure to disconnect the battery cables. This work may affect the airbag deployment timing and result in an unnecessary air bag deployment. There are two crash sensors in the front, one in each of the B-pillars, one each in the C-pillars, one each in the D-pillars, one in the spare tire area, and one in each of the front doors.

Drilling Around Brake Lines and High-Voltage Cables

Use drill depth gauges.

Do not point fasteners down or towards high-voltage components.

Use acorn style rounded cap nuts where possible.

Painting the Vehicle

When painting the vehicle, mask adjacent areas to protect them from paint overspray.

Examples:

- Disc brakes
- Brake hoses
- Gearing unit for the parking brake
- Wheel hubs

CAUTION

After all work on the vehicle, remove drilling chips and deburr all sharp edges.

High-Voltage Battery Pack

When painting near the high-voltage battery pack, be sure to:

- Mask the exhaust vents.
- Mask the regulatory labels on the front and rear of the battery pack.

Do not paint the ground location on the high-voltage battery pack.

Stop Charging in Case of an Emergency

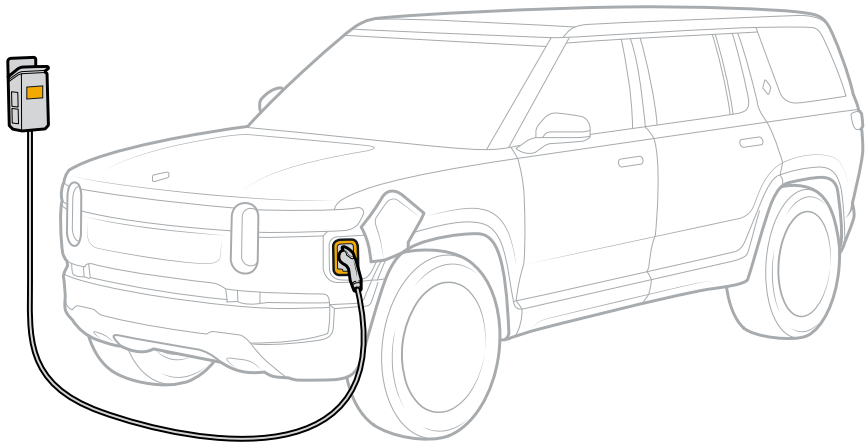

If a vehicle is damaged or on fire while connected to a charger during an emergency, the safest thing is to turn off the electricity. Shut down the Emergency Power Off for the charger and then inspect the situation. If a vehicle is damaged and at risk of a fire, you can attempt to disconnect the charging cable from the vehicle.

IMPORTANT

A Rivian vehicle includes software that automatically senses battery issues and shuts off charging. However, if the fire is not battery related or the vehicle continues charging, try the charge plug disconnection procedures below.

Shut Down the Emergency Power Off

Use the Emergency Power Off to shut down power to the charger. It's normally in the line of sight from the charger.

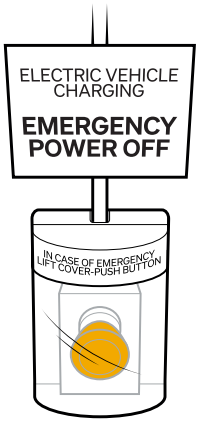

Remove the Charge Plug with a Key

The following serve as keys:

- Key fob (connected via Bluetooth)
- Rivian phone app (connected via Bluetooth)
- Card or wristband (touch the unlock sensor on the vehicle)

Follow these steps to remove the charge plug:

1. Unlock the vehicle.
2. Remove the charge plug from the socket and place it on the charger.

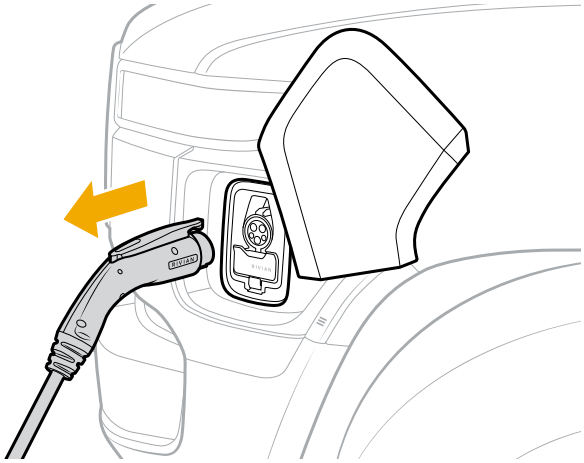

Remove the Charge Plug Without the Key

If you don't have the key but can access the hood, use the emergency charger plug release cable.

Remove the Charge Plug Without the Key or Access to the Hood

DANGER

Do not cut the charging cable. You never want to interrupt a high-voltage current flow. Doing this could cause injury, electrocution, or death.

Manually Release the Charge Plug

If the charge plug won't release from the charge port, you can manually release it.

NOTES

- Always stop a charge session before you unplug from a DC fast charger. Go to **Energy** in the center display, and then choose **Stop Charging**.
- Ensure the vehicle is unlocked before you unplug from an AC charger.

1. Open the vehicle hood.
2. Remove the trim panel from the driver side of the vehicle. Pull up gently to release the clips.

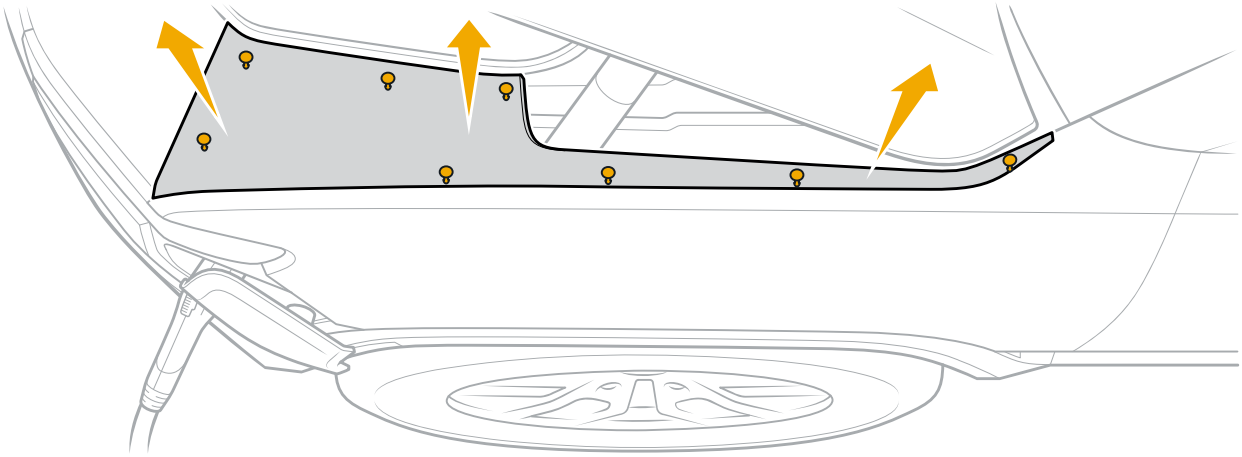

3. Gently pull the cable to release the charge plug.
4. Remove the charge plug from the charge port.
5. Replace the trim panel and secure the clips.
6. Close the hood.

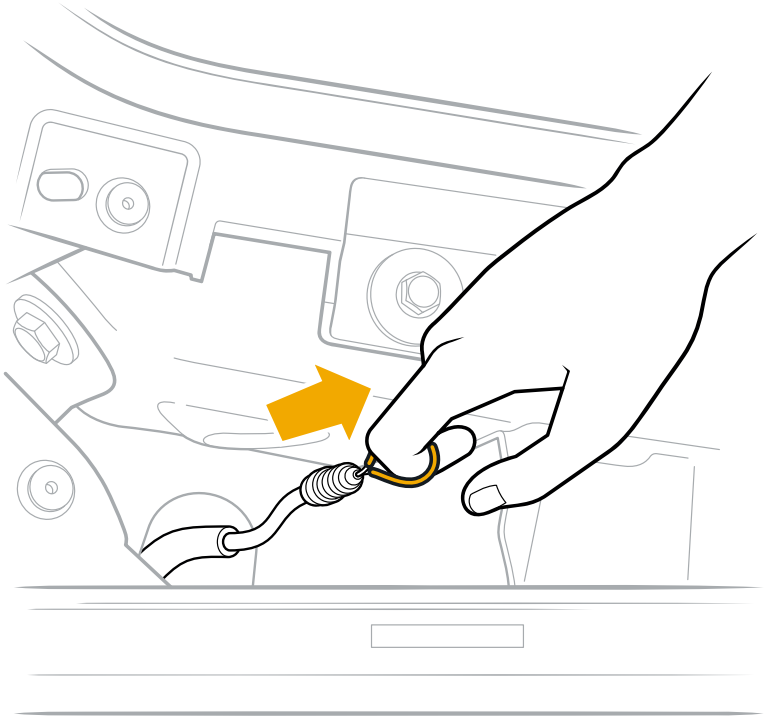

Lift the Vehicle Safely

Rivian recommends you use the following tools to lift the vehicle:

- Leather or abrasion-resistant gloves
- Personal protective equipment
- Vehicle stabilization equipment (jacks, cribbing, airbags)

Use Safe Lift Points

Lift the vehicle at these points only.

See the *Rivian Service Manual*, Raise and Support Vehicle, Labor Code 981020017.

IMPORTANT
Do not use jacks or lifting equipment such as airbags under the battery pack.

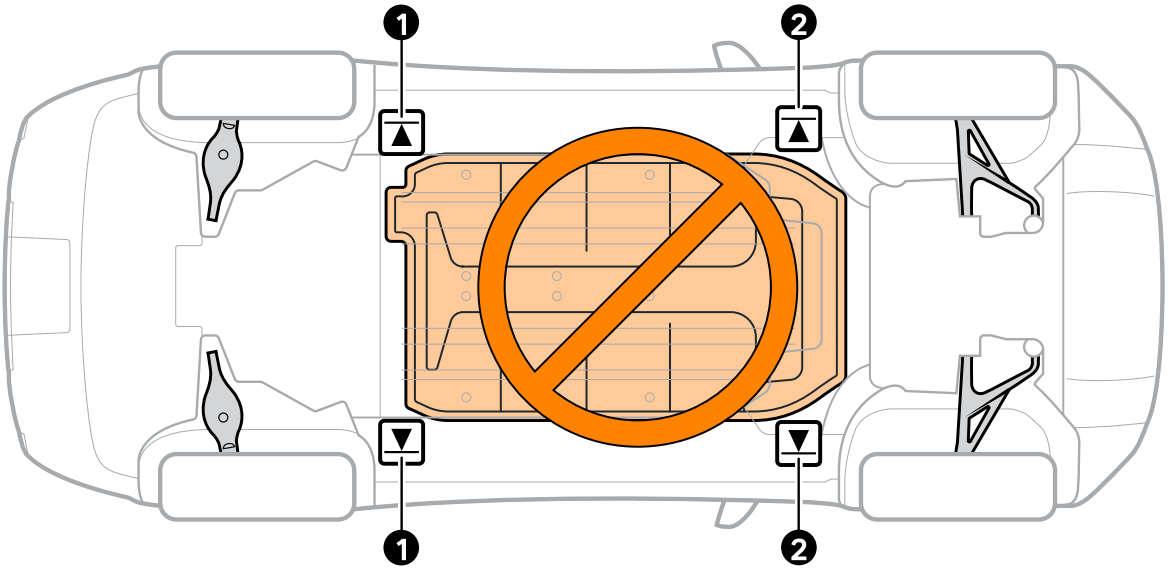

Item	Description
1	Rear jack location (frame rail)
2	Front jack location (frame rail)

Vehicle Maintenance and Storage

CAUTION

- When storing the vehicle longer than 30 days, disconnect the 12 V battery to maintain the state of charge for the high-voltage battery pack.
- When disconnecting the 12 V battery, isolate or separate the negative cable from the battery terminal to avoid unintended arcing or re-connection.
- Do not remove the enclosure covers from an incomplete vehicle until the modification is started.
- Store components that will be installed together in a clean and dry place in the vehicle.
- Make sure that components that were disassembled during a modification are retrofit in the same manner inside the vehicle.

Transport the Vehicle

Prepare the Vehicle for Towing

WARNING

- Only transport the vehicle on a flatbed tow truck.
- Fire Hazard. Towing Rivian vehicles with any wheels on the ground can lead to significant damage and overheating. Extreme overheating can cause a fire.
- Damage caused by improper towing is not covered under warranty.

1. Ensure the front wheels face forward and are parallel with the vehicle.
2. Secure the steering wheel with a holder or strap to keep the wheels straight.

CAUTION

To prevent damage, don't use j-hooks to connect to any suspension components.

3. Connect the front of the vehicle to the tow truck winch with 6 ft (1.8 m) endless loops or a nylon bridle through the lower control arms.

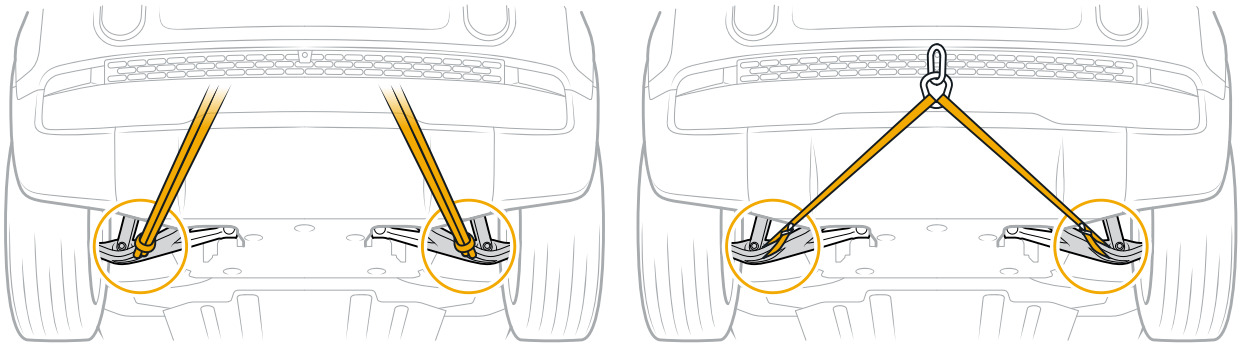

NOTE

If you can't tow from the front of the vehicle, you can connect to the trailer hitch to tow from the rear. You can also connect to the tow eye, if equipped.

4. Press and hold the brake pedal.
5. On the center display, choose **Settings** ⚙ **> Maintenance**. Then turn on **Park brake release**.

NOTE

Park brake release turns off after 15 minutes. You can also turn it off by putting the vehicle in **P** (Park) or turning off **Park brake release** in the center display.

6. Release the brake pedal and confirm release of the electronic park brake.

   You can now load the vehicle onto the tow truck.

> **NOTE**
> If you can't release the electronic park brake, lift the rear wheels to load the vehicle onto the tow truck.

Connect to the Trailer Hitch

Connect to the trailer hitch when you can't tow from the front of the vehicle.

1. Ensure the front wheels face forward and are parallel with the vehicle.
2. Secure the steering wheel with a holder or strap to keep the wheels straight.
3. Remove the trailer hitch cover.
   a. Use a flathead screwdriver to loosen the two captive screws. Turn a quarter turn counterclockwise.
   b. Grip the cover and pull straight down.
4. Insert a nylon bridle or short endless loops through the trailer hitch (1).

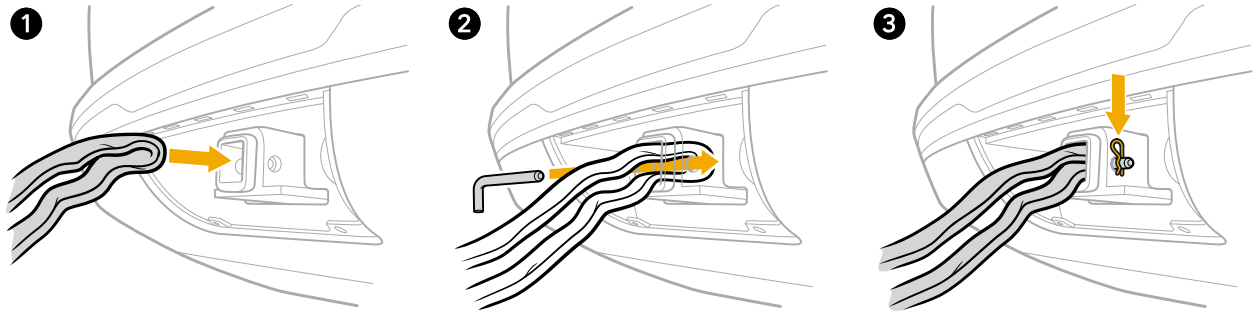

5. Insert the tow pin through the hitch to connect the bridle or loops (2), and then install the tow pin retaining clip (3).
6. Press and hold the brake pedal.
7. On the center display, choose **Settings** ⚙ **> Maintenance**. Then turn on **Park brake release**.

> **NOTE**
> Park brake release turns off after 15 minutes. You can also turn it off by putting the vehicle in **P** (Park) or turning off **Park brake release** in the center display.

8. Release the brake pedal and confirm release of the electronic park brake.

   You can now load the vehicle onto the tow truck.

> **NOTE**
> If you can't release the electronic park brake, lift the rear wheels to load the vehicle onto the tow truck.

Connect to the Tow Eye

Connect using the tow eye if the vehicle is not equipped with tow hooks on the front bumper.

1. Locate the tow eye connection point on the passenger side of the front bumper.

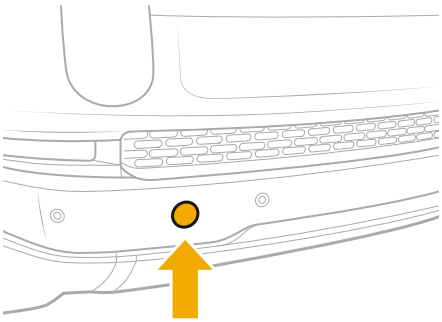

2. Remove the cover from the tow eye connection point.

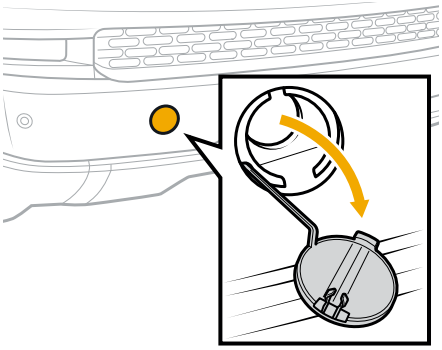

3. Screw the tow eye counterclockwise into the connection point until it is fully secure.

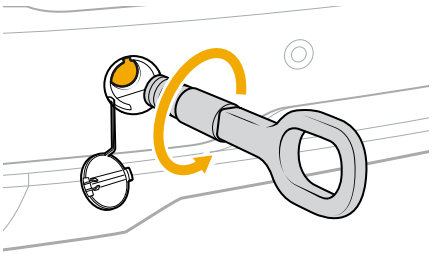

4. Connect the winch hook to the tow eye.

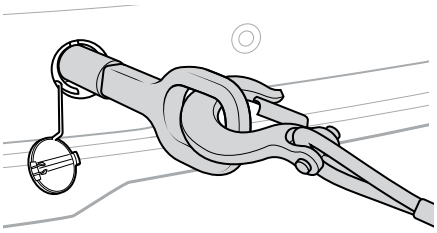

5. Press and hold the brake pedal.
6. On the center display, choose **Settings** ⚙ **> Maintenance**. Then turn on **Park brake release**.

> **NOTE**
> Park brake release turns off after 15 minutes. You can also turn it off by putting the vehicle in **P** (Park) or turning off **Park brake release** in the center display.

7. Release the brake pedal and confirm release of the electronic park brake.

   You can now load the vehicle onto the tow truck.

> **NOTE**
> If you can't release the electronic park brake, lift the rear wheels to load the vehicle onto the tow truck.

8. Pull as straight as possible. The angle can't exceed 30° in any direction to prevent damage to the vehicle.

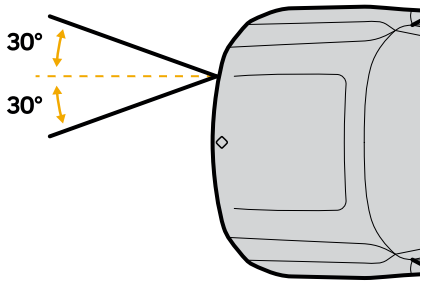

Lift the Rear Wheels

If the battery is dead or you can't release the electronic park brake, lift the rear wheels to load the vehicle onto a tow truck.

DANGER

Secure the vehicle and connect it to the tow truck before you lift the rear wheels. The vehicle can roll when you lift the rear wheels.

CAUTION

Only lift the rear wheels to load the vehicle onto the tow truck. Don't tow the vehicle behind another vehicle or with two wheels on the ground.

1. Chock the front wheels to secure the vehicle.
2. Connect the vehicle to the tow truck using an endless loop through the front control arms or rear trailer hitch.
3. Lift the rear wheels using skates, a dolly, or a tow truck wheel lift.

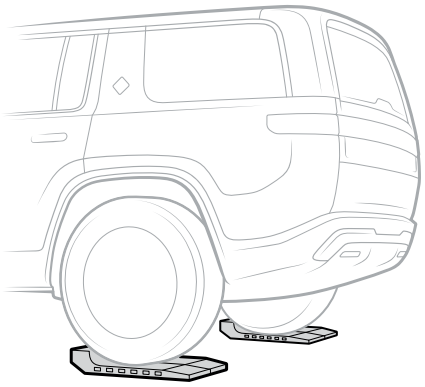

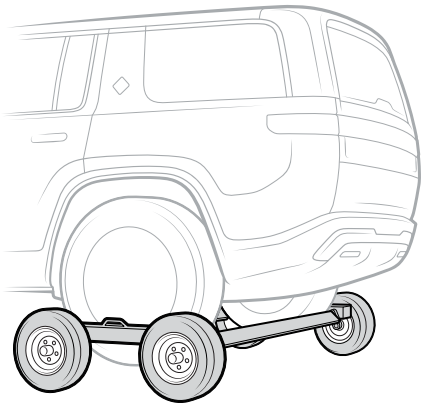

4. With the rear wheels off the ground, position the vehicle to be loaded onto the tow truck bed.

   You can now load the vehicle onto the tow truck.

   NOTE

   If using skates, use the skates to pull the vehicle all the way up the tow truck ramp.

Load the Vehicle onto the Tow Truck

After you've connected the vehicle, you can load the vehicle onto a flatbed tow truck as follows:

1. Ensure the **Park brake release** is turned on or the rear wheels are lifted. See Prepare the Vehicle for Towing.
2. Remove the wheel chocks, if needed.
3. Use the tow truck winch to pull the vehicle onto the tow truck bed.

4. Pull at 5 mph (8 km/h) or less to prevent damage to the powertrain.

> **NOTE**
> If you pull too fast, the vehicle stops and shifts to **P** (Park).

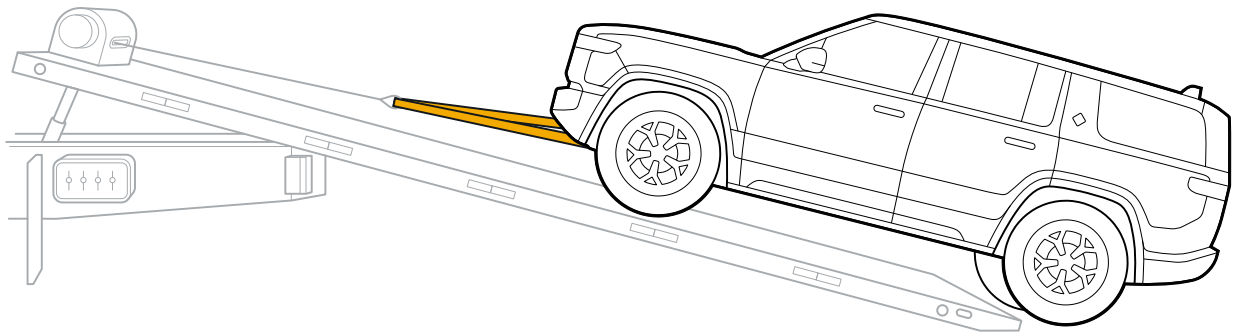

5. Tie down the vehicle using eight-point retention straps with two points of contact per corner.

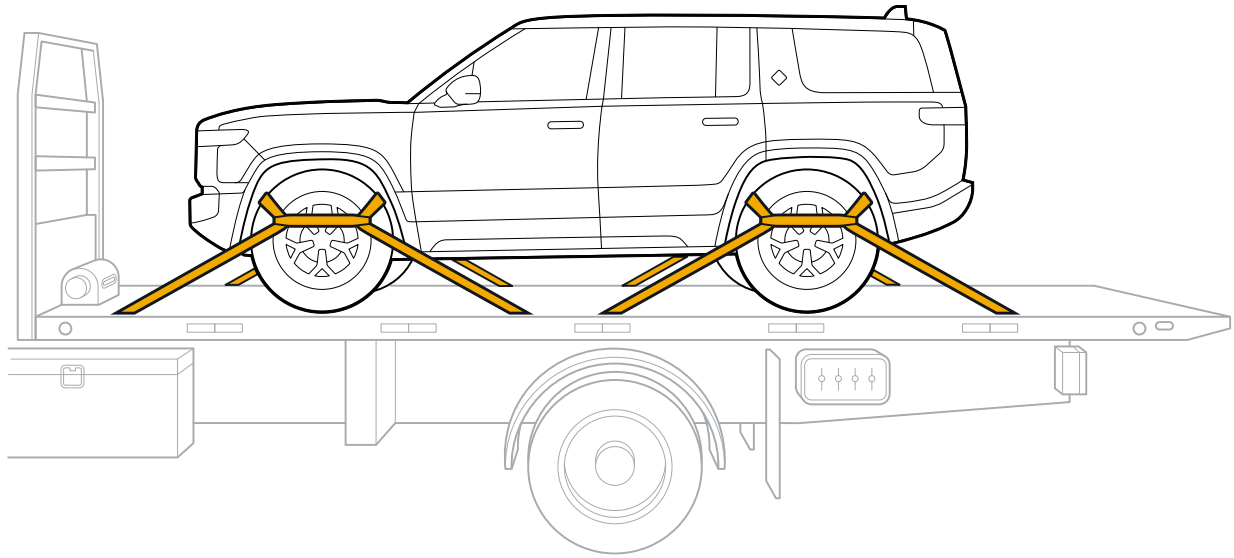

> **CAUTION**
> To prevent damage, ensure the straps don't contact the brake lines or suspension components behind the tire.

6. Put the vehicle into **P** (Park).
7. Go to **Drive Modes** in the center display. Choose **All-Purpose**, and then choose **Low** under **Ride Height**.

Vehicle Shipping Mode

Use Vehicle Shipping mode to preserve battery charge while the vehicle is in transit. Vehicle Shipping mode turns off various features, including the following:

- Gear Guard alarm
- Gear Guard motion videos
- Passive lock/unlock

> **NOTES**
> - When Vehicle Shipping mode is turned on, you can leave keys inside the vehicle and the vehicle sleeps normally.
> - The Rivian Camp Speaker locks in the dock.

To turn on Vehicle Shipping mode when you are ready to transport the vehicle:

1. Put the vehicle into **P** (Park).
2. Go to **Settings** ⚙ **> Maintenance**.
3. Turn on **Vehicle Shipping** mode.

> **NOTE**
> Startup may take longer than normal when Vehicle Shipping mode is turned on.

To turn off Vehicle Shipping mode after you arrive at your destination:

1. Put the vehicle in **P** (Park).
2. Go to **Settings** ⚙ **> Maintenance**.
3. Turn off **Vehicle Shipping** mode.

Vehicle Dimensions and Packaging

Overall Vehicle Specifications

Specification	R1S
Overall length	200.8 in (5,100 mm)
Overall height - Standard [with antenna]	34 in tires - 74.1 in (1,881 mm) 33 in tires - 73.2 in (1,860 mm)
Overall height - Standard [without antenna]	34 in tires - 72.3 in (1,837 mm) 33 in tires - 71.5 in (1,816 mm)
Overall height - Standard [with roof cross bars]	34 in tires - 75.4 in (1,916 mm) 33 in tires - 74.6 in (1,895 mm)
Overall width, including mirrors	88.4 in (2,246 mm)
Overall width, not including mirrors	79.3 in (2,014 mm)
Overhang, front	35.8 in (909 mm)
Overhang, rear	43.9 in (1,116 mm)
Wheelbase	121.1 in (3,075 mm)
Track width front and rear	68.1 in (1,730 mm)
Wheel sizes [aluminum alloy]	20 x 8.5 in 22 x 8.5 in UHP (staggered): Front 22 x 8.5 in, Rear 22 x 9.5 in
Tire size front and rear	34 in - 275/65R20 33 in - 275/60R20, 275/50R22 UHP (staggered): Front 275/50R22, Rear 305/45R22
Turning circle, curb-to-curb	41.3 ft (12.6 m)
Approach angle [Standard]	34 in tires - 30.5° 33 in tires - 28.9°
Approach angle [Highest/Max]	34 in tires - 35.8° 33 in tires - 34.8°

Specification	R1S
Departure angle [Standard]	34 in tires - 30.1° 33 in tires - 28.9°
Departure angle [Highest/Max]	34 in tires - 34.4° 33 in tires - 33.6°
Breakover angle [Standard]	34 in tires - 23.5° 33 in tires - 21.9°
Breakover angle [Highest/Max]	34 in tires - 29.7° 33 in tires - 28.6°
Ground clearance [Standard]	34 in tires - 11.4 in (290 mm) 33 in tires - 10.6 in (269 mm)
Ground clearance [Minimum]	34 in tires - 9.2 in (233 mm) 33 in tires - 8.6 in (219 mm)
Ground clearance [Highest/Max]	34 in tires - 14.7 in (373 mm) 33 in tires - 14.1 in (359 mm)

Storage Dimensions

Dimension	R1S
Front Trunk length [Maximum - excluding cargo shelf]	22.4 in (569 mm)
Front Trunk width [Maximum]	54.8 in (1,393 mm)
Front Trunk depth [Maximum - excluding lower storage insert]	22.5 in (571 mm)
Front Trunk volume [Excluding lower storage insert]	73.7 gal (279 L)
Front Trunk lift in height [Front Trunk seal to ground] - Standard	34 in tire: 36.3 in (923 mm) 33 in tire: 35.5 in (902 mm)
Cargo floor length - Maximum behind third row seats	21.8 in (553 mm)
Cargo floor length - Maximum behind second row seats	51.5 in (1,307 mm)
Cargo floor length - Maximum behind first row seats	84.5 in (2,147 mm)
Cargo width - Minimum	42.5 in (1,079 mm)
Height, with rear door open	33.7 in (855 mm)
Rear lift in height [open tailgate to ground] - Standard	34 in tire: 34.7 in (881 mm) 33 in tire: 34.1 in (867 mm)
Center of Gravity (CGz) - empty vehicle	Ranges from 25.3 in (643 mm) to 26.0 in (661 mm)

Technical Limitations of the Vehicle

Maximum Corner Loading Limit

The maximum individual tire load limit is 2,738 lb (1,242 kg). It applies to all four corners.

The front axle Gross Axle Weight Ratio (GAWR) is 4,134 lb (1,875 kg), therefore the two front tires should not exceed that combined. The estimated maximum front corner load limit is 2,067 lb (937.5 kg) per tire.

The rear axle GAWR is 4,960 lb (2,250 kg), therefore the two rear tires should not exceed that combined. The estimated maximum rear corner load limit is 2,480 lb (1,125 kg).

Towing Capacity

Towing capacity is 7,700 lb (3,492 kg).

> **NOTE**
> Loads over 5,000 lb (2,267 kg) require a weight distributing hitch.

Approved Tire Manufacturer and Size

Brand/Model	Tire Size
Pirelli Scorpion All Terrain Plus	275/65R20
Goodyear Territory AT	275/60R20
Pirelli Scorpion MS	HL275/50R22
Michelin Pilot Sport S5 Front (staggered)*	HL275/50R22
Michelin Pilot Sport S5 Rear (staggered)*	305/45R22

* Michelin Pilot Sport S5 Front and Rear tires can only be used together and not with other approved tires.

Center of Gravity

The height of a vehicle's center of gravity significantly affects its braking and handling characteristics. The tendency of a vehicle to tip over increases as the center of gravity height rises.

See Storage Dimensions for the recommended Center of Gravity for this vehicle.

IMPORTANT

The center of gravity changes depending on cargo placement and vehicle load. Refer to the maximum corner limit and approved tire size information to ensure that the vehicle does not exceed the GVWR and GAWR.

Do not exceed the individual tire load limit of 2,738 lb (1,242 kg).

The upfitter is responsible for determining and complying with the vehicle maximum center of gravity restrictions.

Rivian recommends that the upfitter record four corner weights before starting modifications. This can guide decisions on what to install in the vehicle.

For any questions, please contact aftersalessupport@rivian.com.

Vehicle Exterior

See Dimensions and Packaging for details.

There are no wide mirror options, so there should be no variation from the factory vehicle dimensions.

Weights

The vehicle ships from the factory fully certified and labeled as a complete vehicle. An upfitter who performs alterations or modifications to a complete vehicle has certain obligations to ensure that the changes are correctly documented and labeled.

This section serves as a general guide, but upfitters should follow federal and state laws and regulations that apply, as well as prevailing industry standards.

These terms apply to vehicle weights:

Terminology	Description
Curb Weight (CW)	The weight of the vehicle, as shipped from the Rivian factory, with all its standard equipment and necessary fluids (like coolant), but without any passengers or cargo. The published curb weight may not include optional equipment installed on your specific vehicle.
Gross Vehicle Weight Rating (GVWR)	The maximum allowable total weight when fully loaded, including the vehicle, passengers, cargo, and additional equipment. This limit is specified for safety and legal reasons.
Payload Capacity	The maximum weight of equipment, cargo and number of passengers that the vehicle can carry safely. Payload capacity = Gross Vehicle Weight Rating (GVWR) – Curb Weight.

For the Gross Vehicle Weight Rating (GVWR) of the R1T and R1S, see the Certification Label on the B-pillar lower door jamb.

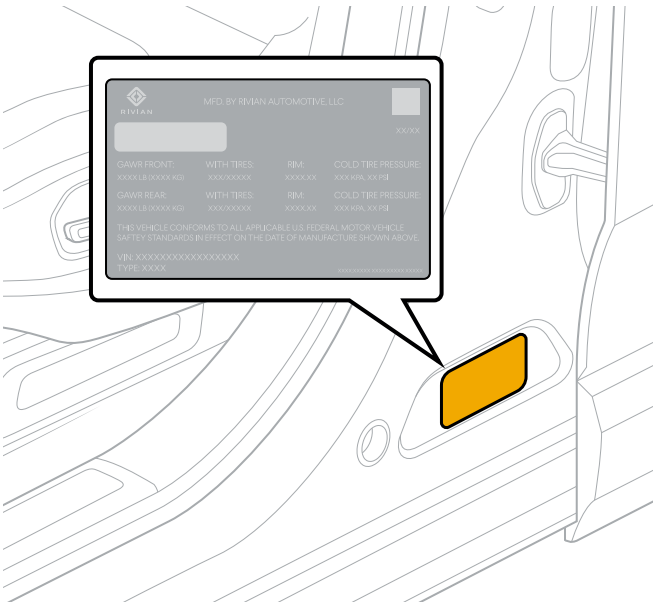

DANGER

Never exceed the Gross Vehicle Weight Rating (GVWR) established by the manufacturer. This can cause vehicle damage, reduced performance, and increases the risk of a crash.

Payload

The vehicle's payload is on the Tire and Loading Information Label, which is applied to the driver side door pillar at the factory. The rated payload allows for a small vehicle-to-vehicle variation and for factory options.

Additional Labeling When Adding Weight

When an upfitter adds significant weight to a certified vehicle that is greater than 1.5% of the GVWR or greater than 100 lb (45 kg), whichever is less, US law requires them to attach a yellow Reduced Load Carrying Capacity Label within 1 in (25 mm) of the original Tire Placard Label on the driver door pillar.

This label alerts the driver to the reduced carrying capacity from the originally certified amount. The reduced value must be shown to the nearest kilogram and pound, and be accurate within 1% of the actual added weight.

Suitable labels are available from NTEA (National Truck Equipment Association) and other commercial sources.

Recommended Fastener Torque Values

These are the recommended fastener torque values for hard (all metal) joints, soft (mixed material) joints, and plastic tapping screws.

Hard and Soft Joints

The estimated maximum torque of soft joints is 75% of the hard joint maximum torque value.

The estimated minimum torque of soft joints is 33% of the maximum torque value for soft joints.

Self tapping (ST) threads fall under the soft joint torque values.

Nominal Thread Size	Property Class	Hard (All Metal) Joints		Soft (Mixed Material Joints)	
		Min (Nm)	Max (Nm)	Min (Nm)	Max (Nm)
M4 (ST 4.2)	8.8	1.7	3.3	0.8	2.5
	10.9	2.4	4.8	1.2	3.6
M5	8.8	3.3	6.5	1.6	4.9
	10.9	4.8	9.5	2.4	7.1
M6 (ST 6.3)	8.8	5.7	11.3	2.8	8.5
	10.9	8.3	16.5	4.1	12.4
M8	8.8	13.7	27.3	6.8	20.5
	10.9	20.1	40.1	9.9	30.1
M10	8.8	27.0	54	13.4	40.5
	10.9	39.5	79	19.6	59.3
M12	8.8	46.5	93	23.0	69.8
	10.9	68.5	137	33.9	102.8
M14	8.8	74.0	148	36.6	111.0
	10.9	109.0	218	54.0	163.5
M16	8.8	115.0	230	56.9	172.5
	10.9	169.0	338	83.7	253.5
M18	8.8	164.5	329	81.4	246.8
	10.9	234.5	469	116.1	351.8

Tapping Screws (Plastic)

The estimated minimum values are based off of lowest yield common plastic material.

The estimated maximum values are based off of highest yield common plastic material.

Nominal Thread Size (mm)	Min (Nm)	Max (Nm)
1.8	0.1	0.4
2	0.1	0.4
2.2	0.1	0.5
2.5	0.15	0.8
3	0.3	1.3
3.5	0.4	1.9
4	0.5	2.9
4.5	0.7	3.9
5	1	5.3
6	1.5	9.7
8	3.4	23.8

Typical Weight and Rating Values

The table below provides typical weight and rating values for the vehicle at the time this document was published. Consult the label provided on your specific vehicle(s), as vehicle specifications are subject to change.

The best practice is to verify your vehicle weight at the beginning and end of upfitting. Commercial truck scales in your area can provide an accurate measurement, if your shop does not have an appropriate weigh scale available.

Weight/Rating	Specification
Gross Vehicle Weight Rating	8,532 lb (3,870 kg)
Gross Axle Weight Rating, Front	4,134 lb (1,875 kg)
Gross Axle Weight Rating, Rear	4,960 lb (2,250 kg)

Interior Overview

Interior Front View

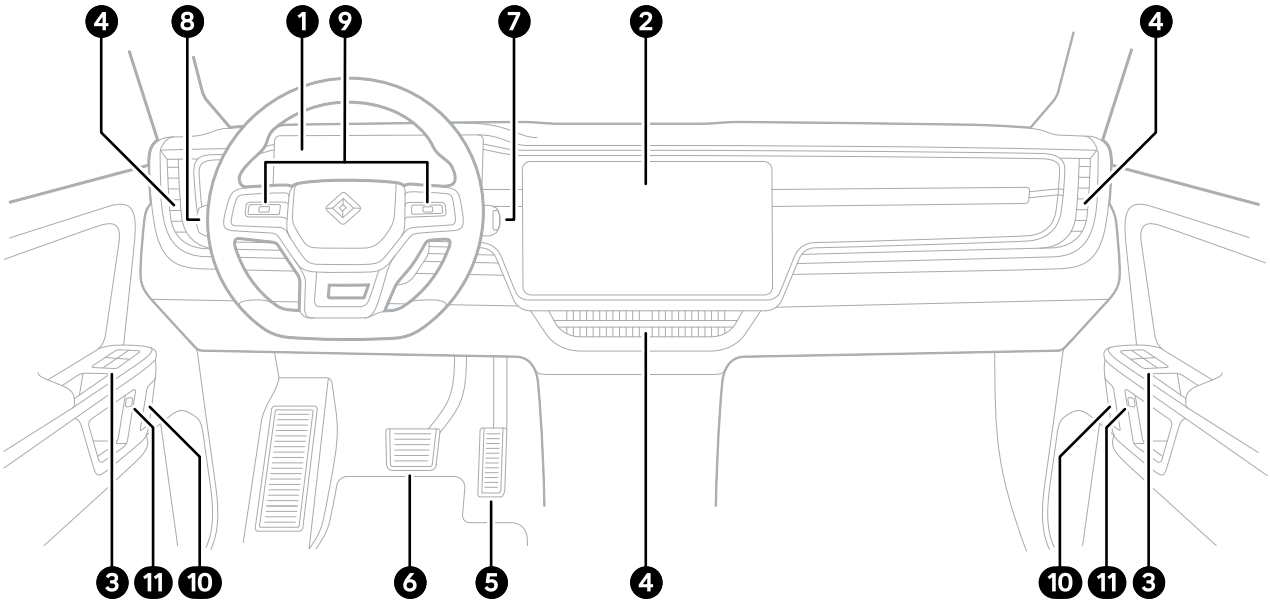

Item	Description
1	Driver display
2	Center display
3	Window controls
4	Vents
5	Accelerator pedal
6	Brake pedal
7	Drive stalk
8	Lights stalk
9	Thumb controls
10	Manual door handles
11	E-latches

Interior Rear View

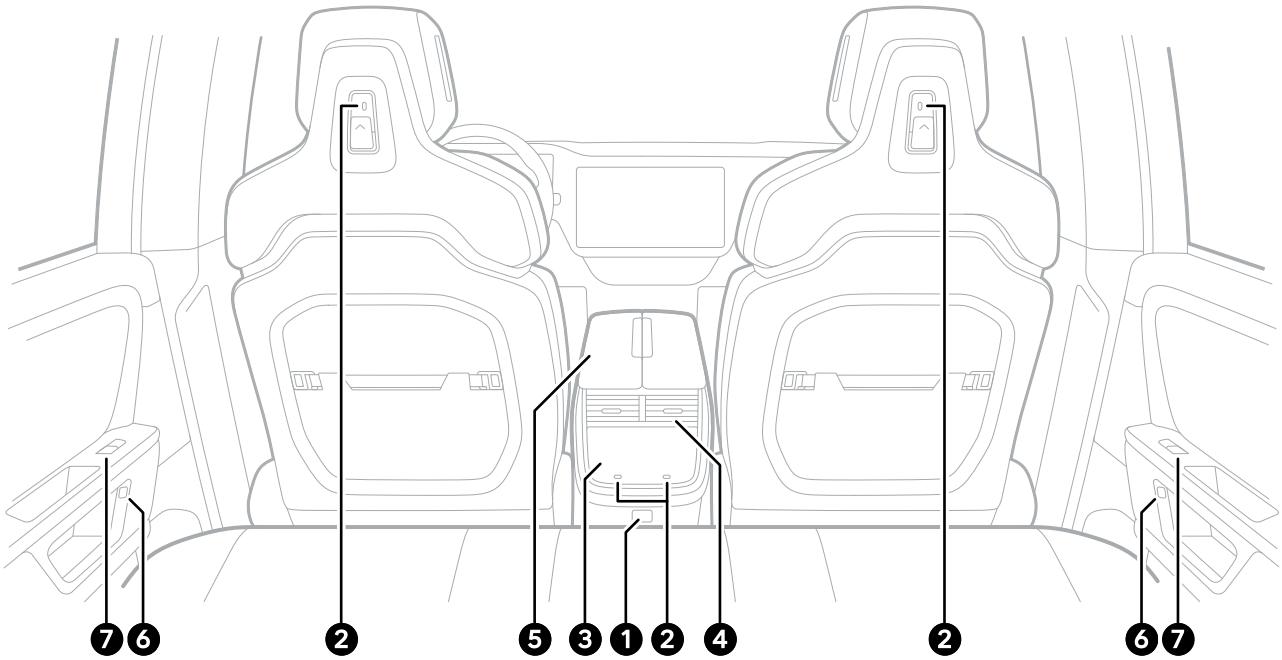

Item	Description
1	Power outlet
2	USB-C outlets
3	Rear display
4	Rear vents
5	Center console
6	E-latches
7	Window controls

Interior Cargo View

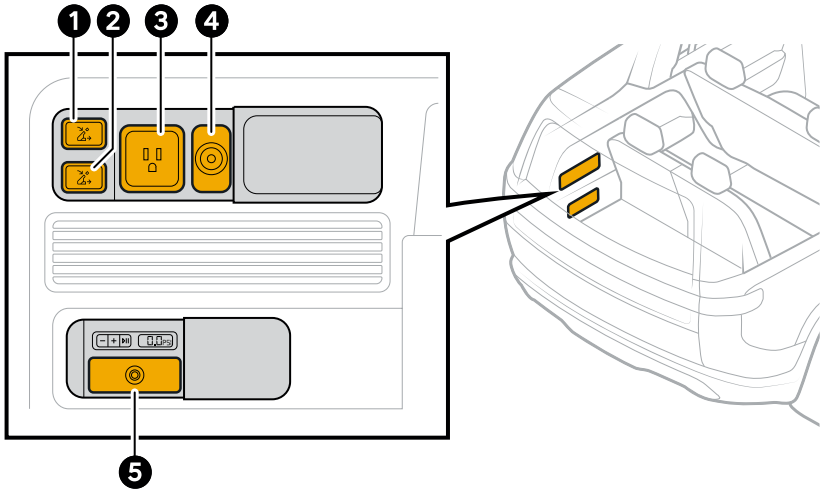

Item	Description
1	Left quick fold button
2	Right quick fold button
3	110 V power outlet
4	12 V power outlet
5	Air compressor (if equipped)

Cabin Interior Modifications

General Information

- Do not block:
  - Vehicle entry and exit
  - Use or function of any systems
  - Access to any maintenance areas
  - Visibility or movement of the driver
- Do not exceed the permissible center of gravity and maximum permissible axle loads.
- The interior must be designed with soft edges and surfaces.
- Fittings must be made of flame-resistant materials and be fitted securely.
- Allow unimpeded access to the seats.
- There must not be any protruding parts, edges, or corners in the seating area that could cause injury.
- Use drill depth gauges, and do not point fasteners down/towards high-voltage or safety critical electrical cables. Use acorn style rounded cap nuts where possible.
- Make sure that the fixings in the bulkhead area do not encroach on the seat belts or seat belt retractors.
- Be careful when drilling through interior panels, to avoid damaging wire harnesses.

Recommended Fastener Torque Values

See the recommended fastener torque values for hard (all metal) joints, soft (mixed material) joints, and plastic tapping screws.

Don't Weld to these Parts

Don't weld these parts or areas:

- A-pillars, B-pillars, C-pillars, and D-pillars
- In-bending radii
- Near the airbags
- Sensor locations for Autonomy systems (for example, radars and sensors for parking or distance control)
- Near the side or front sensors and Restraints Control Module (RCM)
- Bumper beam or crush cans

Keep Out Areas

For safety and to meet regulatory requirements, do not modify the:

- Driver or center displays
- Sun visors
- Driver door e-latch or manual emergency releases
- Driver restraint and safety systems
- Airbag deployment areas
- Vehicle controls and switches and their markings

Ventilation

The cabin area should have adequate ventilation, allowing for proper air circulation. The defrosting functions of the windshield and side windows must remain operational.

Seal all fixings through the floor, sides, or roof. Specifically, seal any cut outs or openings between the cabin and the outside so that air does not enter the cabin.

Glass

Rivian glass is homologated to FMVSS 205, so Rivian advises against modifying or removing the standard windshield or windows.

Structural Components

Do not drill, cut, weld, add structure, or modify the A-pillar, AB-pillar flanges, B-pillar, cant rail, C-pillar, D-pillar, first-row seat crossmembers, second-row seat tub and crossmembers, front, mid, and rear roof headers, RCM bracket, dash, cowl, or floor (highlighted).

Press Hardened Steel

- Press hardened steel is any boron steel that has been austenitized and quenched during the hot stamping process to produce ultra-high-strength martensitic steel.
- Do not drill or weld into any press hardened steel, as shown in gold in the image below.
  - Drilling can create cracks in the ultra-high-strength material.
  - Welding can create heat affected zones in the material, which can reduce the strength of the press hardened steel parts.

See the *RCI-52-24-003-1: Model Year 2025+ Vehicles R1S Material Matrix and Repair Guide* in the *Rivian Service Manual* for more information.

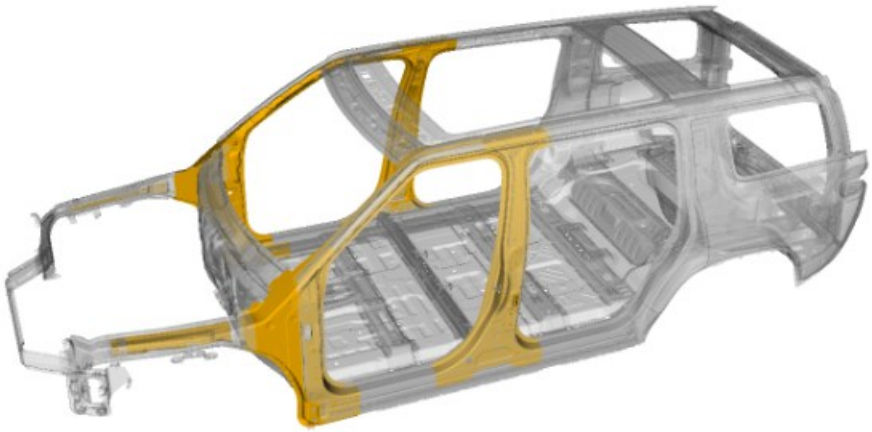

Driver and Passenger Seats

- Do not modify the driver or passenger seats or seat structure.
- If modifications are made to the driver or passenger seats or seat structure or if the driver or passenger seat is replaced with a different seat, the upfitter assumes responsibility for the reliability and compliance with relevant FMVSS standards for modifications made to the driver and/or passenger seat.
- If the seats are removed and reinstalled, follow the service procedure.
- If the passenger seat is removed, the passenger restraints, retractors, anchors, and D-ring must be removed. Dummy plugs must be installed at all passenger electrical connections per Rivian specification.
- Do not drill, cut, weld, or modify the first row seat floor crossmembers.

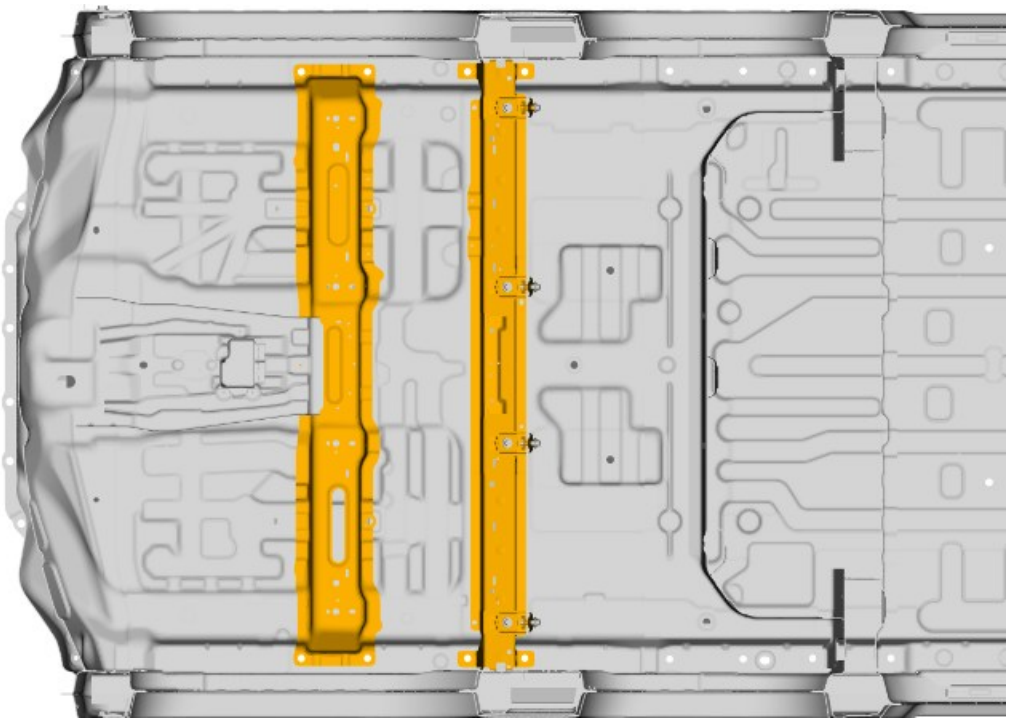

- When drilling holes near or above the retractor and anchor pretensioner, cover the mechanism to prevent debris from falling into the assembly.
- Do not drill into the seat belt retractor or the mounting location.

Second-Row Seat

- Do not modify the second-row seat or seat structure.
- If modifications are made to the second-row seat or seat structure or if the second-row seat is replaced with a different seat, the upfitter assumes responsibility for the reliability and compliance with relevant FMVSS standards for modifications made to the second-row seat.
- If the seats are removed and reinstalled, follow the service procedure.
- If the second-row seat is removed, then its restraints, retractors, anchors, and D-ring must be removed. Dummy plugs must be installed at all second-row electrical connections per Rivian specification.
- Do not drill, cut, weld, or modify the second-row seat floor cross members.

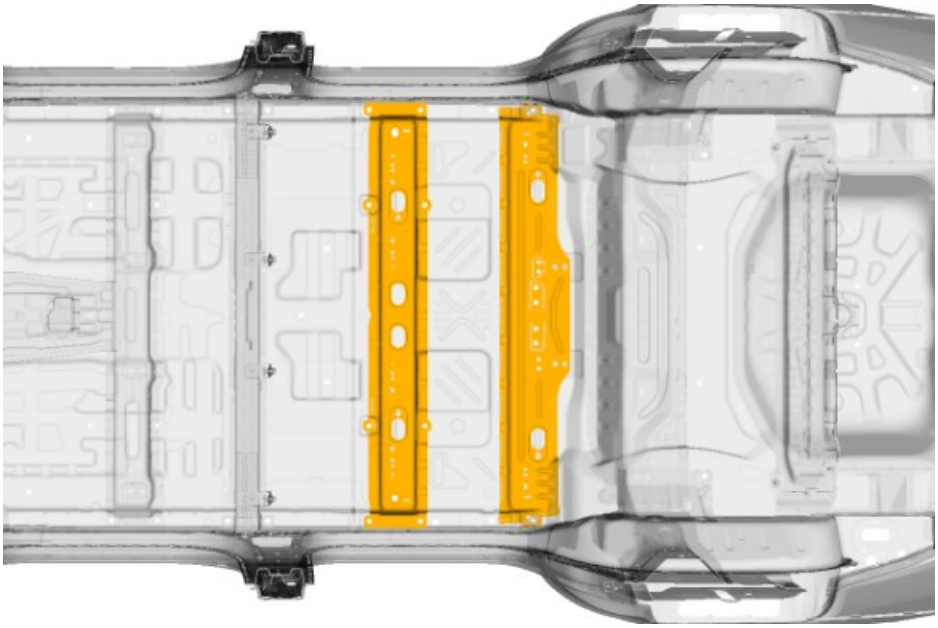

- The second-row consists of a 40% seat and a 60% seat. These percentages refer to the proportion of the second-row bench they occupy.
- The 60% seat may be removed from the second-row, because the 40% seat mounting strategy is independent of the 60% seat.
  - If the second-row 60% seat is removed, its respective restraints, retractors, anchors, and D-ring must be removed. Dummy plugs must be installed at all affected electrical connections per Rivian specification.
- The 40% seat may not be removed if the intention is to only keep the 60% seat because of the mounting dependency of the 60% seat on the 40% seat.
  - If the 40% seat is removed from the second-row, the 60% seat must also be removed.

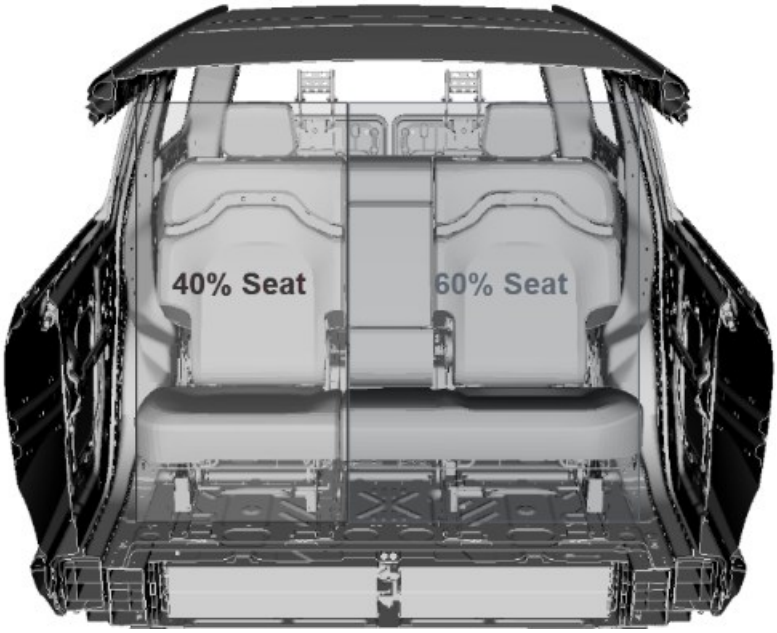

When drilling holes near or above the retractor and anchor pretensioner, cover the mechanism to prevent debris from falling into the assembly.

To prevent webbing damage:

- Any additional hardware must not cut, pinch, or interfere with the seatbelt.
- Avoid sharp brackets near webbing. All edges must have a minimum radius of 0.02 in (0.5 mm).
- Avoid upfitting parts that may change the belt routing to the occupant.

Do not modify the isofix/latch points (highlighted below). If the isofix/latch points are modified in any way, the second-row seat must be removed and no child car seat installed.

> **NOTE**
> The ISOFix/latch points should meet NHTSA requirement FMVSS 225.

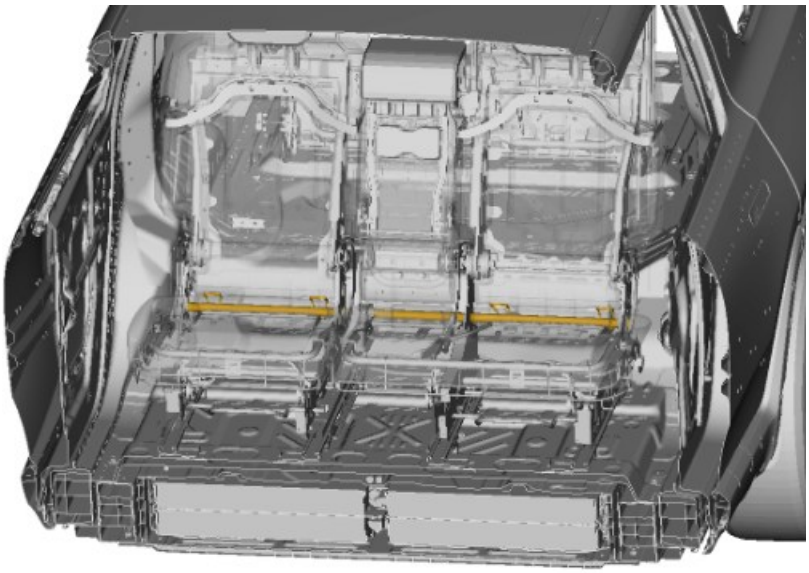

Third-Row Seat

- Do not modify the third-row seat or seat structure.
- If modifications are made to the third-row seat or seat structure or if the third-row seat is replaced with a different seat, the upfitter assumes responsibility for the reliability and compliance with relevant FMVSS standards for any modifications.
- If the seats are removed and reinstalled, follow the service procedure.
- If the third-row seat is removed, then its restraints, retractors, anchors, and D-ring must be removed. Dummy plugs must be installed at all third-row electrical connections per Rivian specification.
- Do not drill, cut, weld, or modify the third-row seat floor cross members.

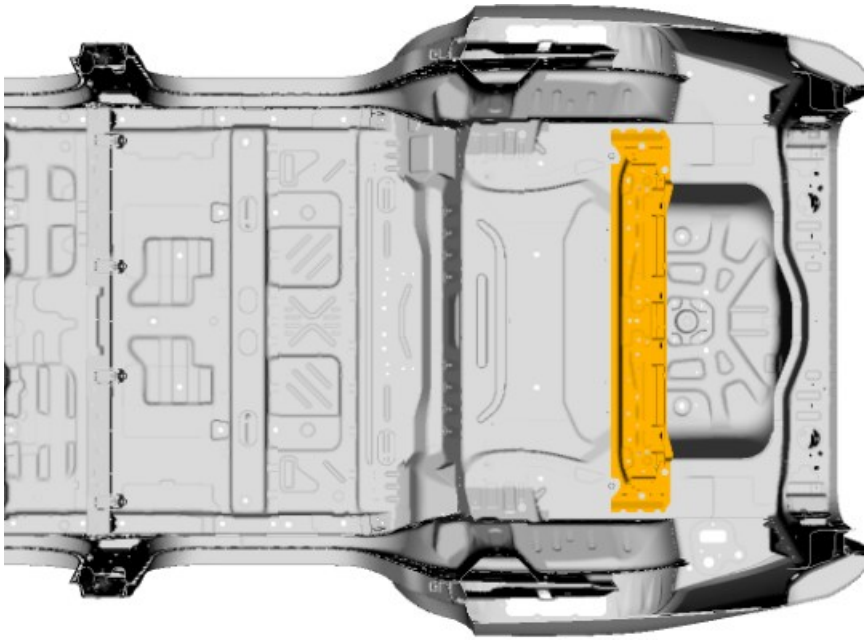

When drilling holes near or above the retractor and anchor pretensioner, cover the mechanism to prevent debris from falling into the assembly.

To prevent webbing damage:

- Any additional hardware must not cut, pinch, or interfere with the seatbelt.
- Avoid sharp brackets near webbing. All edges must have a minimum radius of 0.02 in (0.5 mm).
- Avoid upfitting parts that may change the belt routing to the occupant.

Do not modify the isofix/latch points (highlighted below). If the isofix/latch points are modified in any way, the third-row seat must be removed and no child car seat installed.

NOTE

ISOFix/latch points should meet NHTSA requirement FMVSS 225.

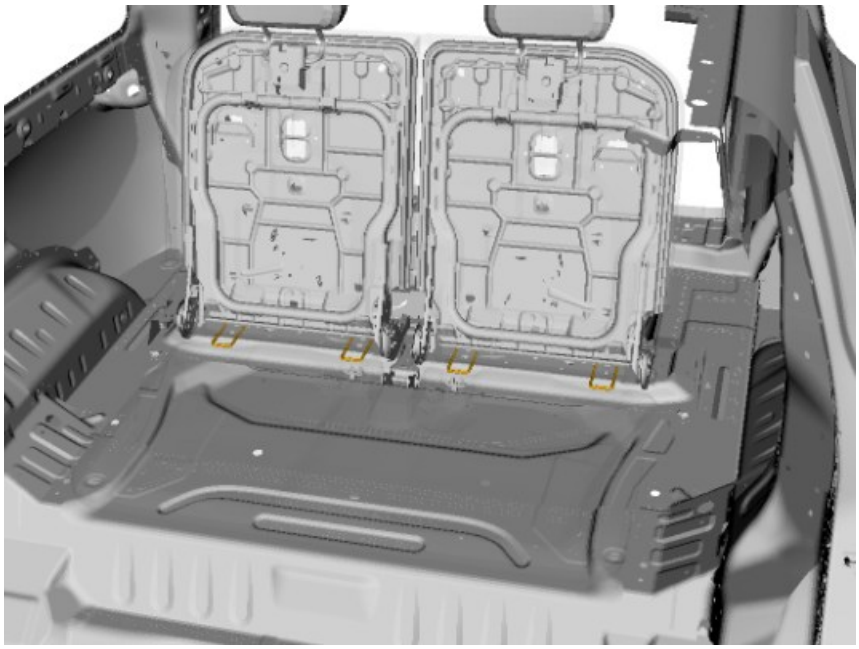

Center Console

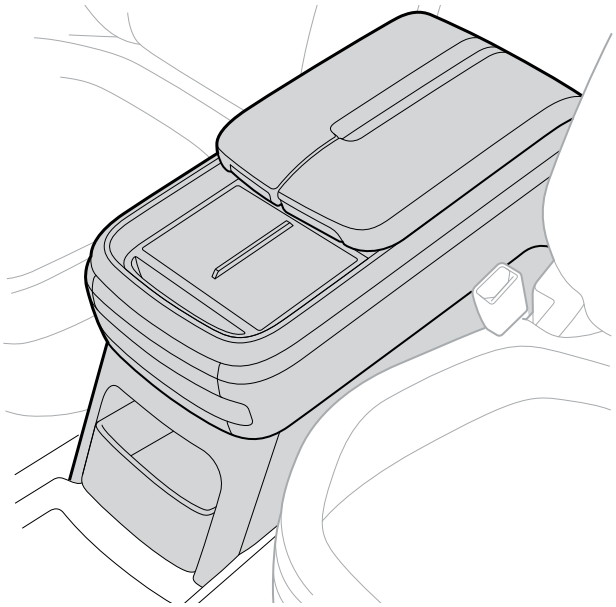

Do not cut or modify the high-voltage wires to the 120 V outlet in the center console, or modify the outlet itself. The console may be relocated as long as the wires and outlet are not modified.

If the center console is removed and replaced with a non-Rivian center console, that new console must not extend past the y-footprint of the Rivian center console as shown in the image below.

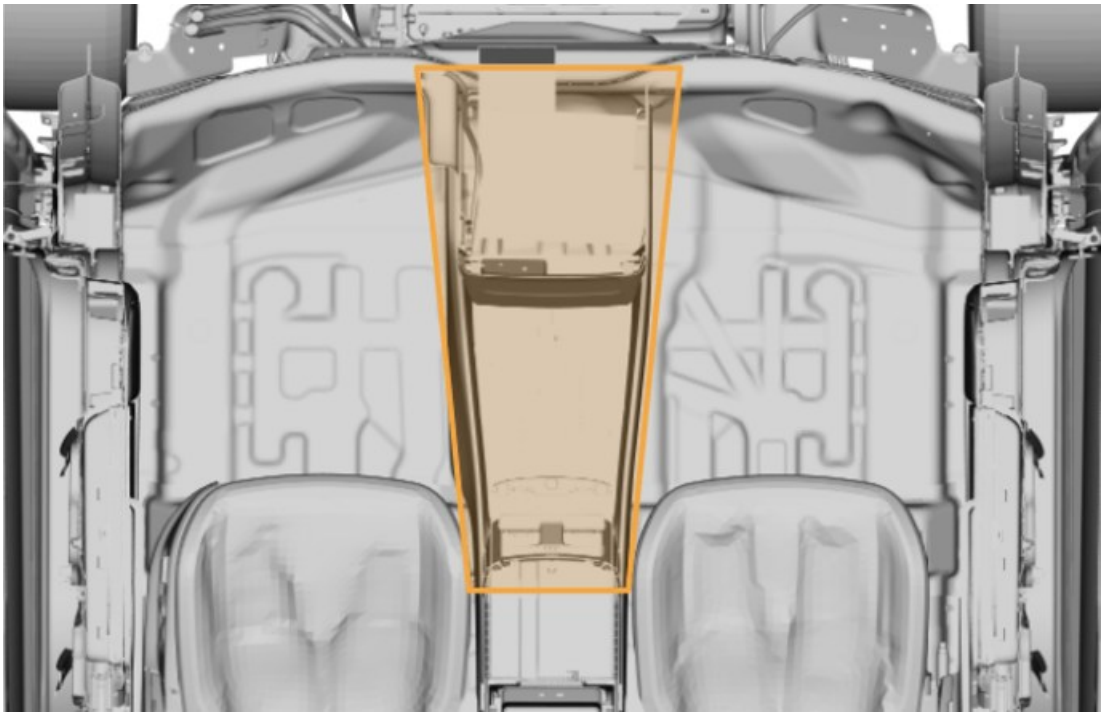

CAUTION

Aftermarket center consoles must protect the RCM from being struck or impacted and from spills and liquid intrusion.

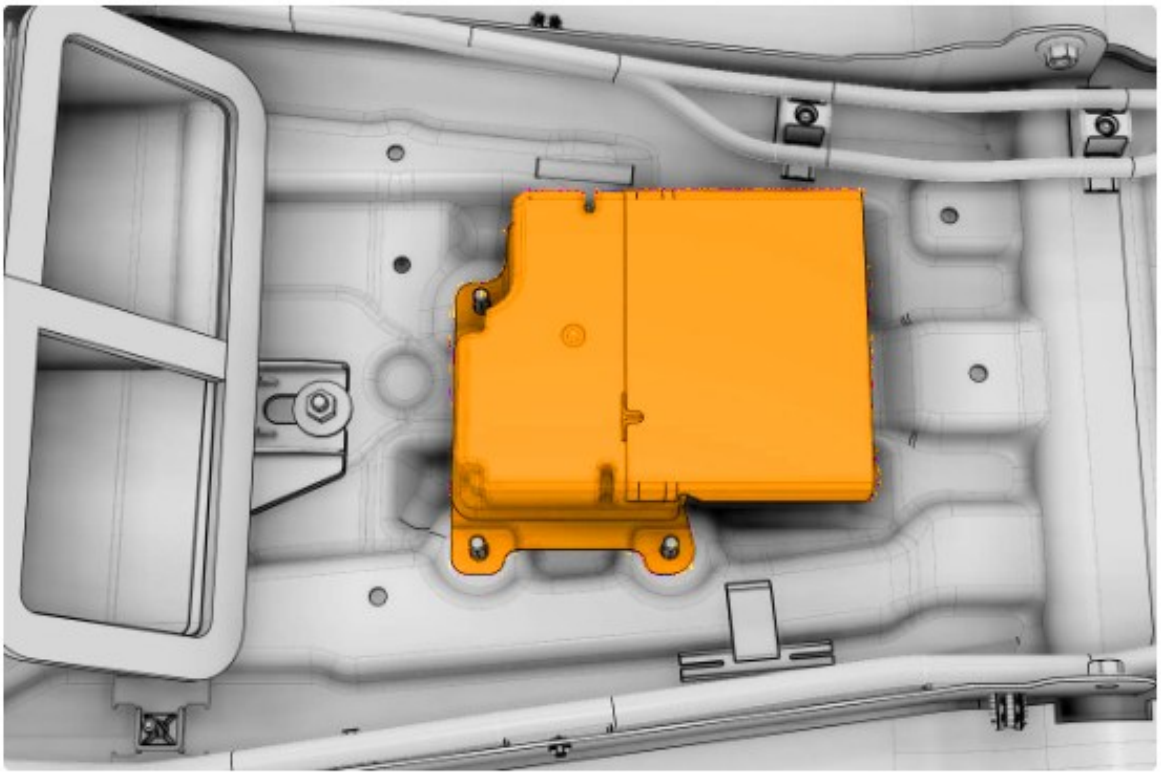

Exterior Overview

Driver Side Exterior View

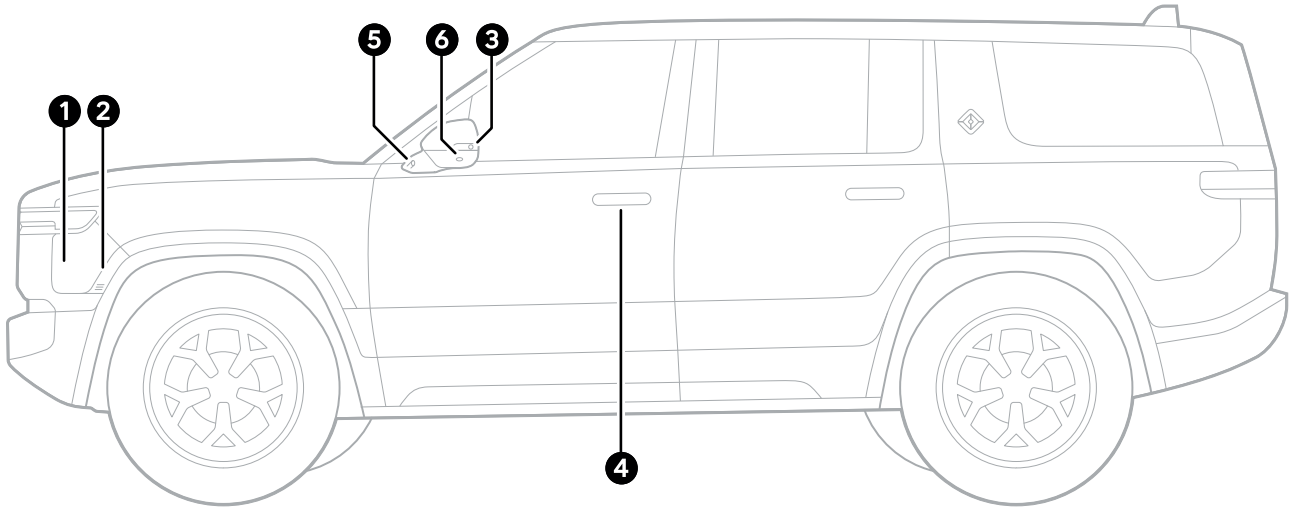

Item	Description
1	Charge port door
2	Charge port door sensor
3	Lane change camera
4	Door handle / key card reader
5	Wing camera
6	Surround view camera

Front and Rear Exterior View

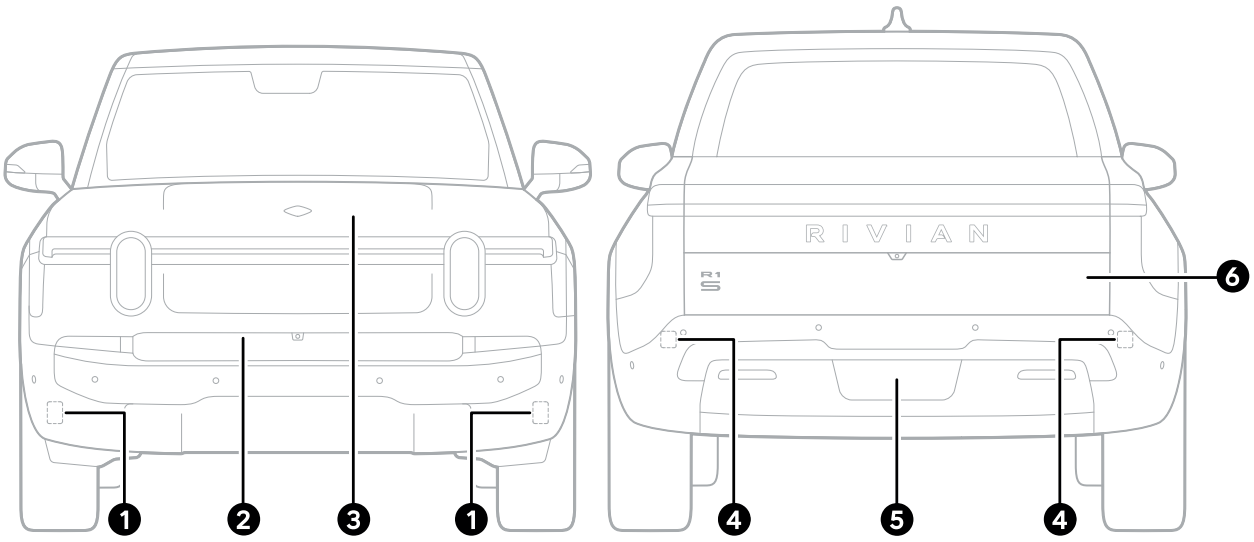

Item	Description
1	Front vehicle access sensors
2	Front trunk button (hidden)
3	Front trunk
4	Rear vehicle access sensors
5	Towing receiver hitch
6	Tailgate
7	Liftgate

NOTE

All vehicles ship with license plate brackets installed on the rear, and installed on the front by request. If your vehicle does not have a front license plate bracket installed, and you would like one, or if it is required by law in your state, contact aftersalessupport@rivian.com.

CAUTION

Installation of a front license plate bracket requires the use of special tools and fasteners. We do not recommend installing the bracket yourself as improper installation can cause damage to the vehicle.

Front and Rear Lights

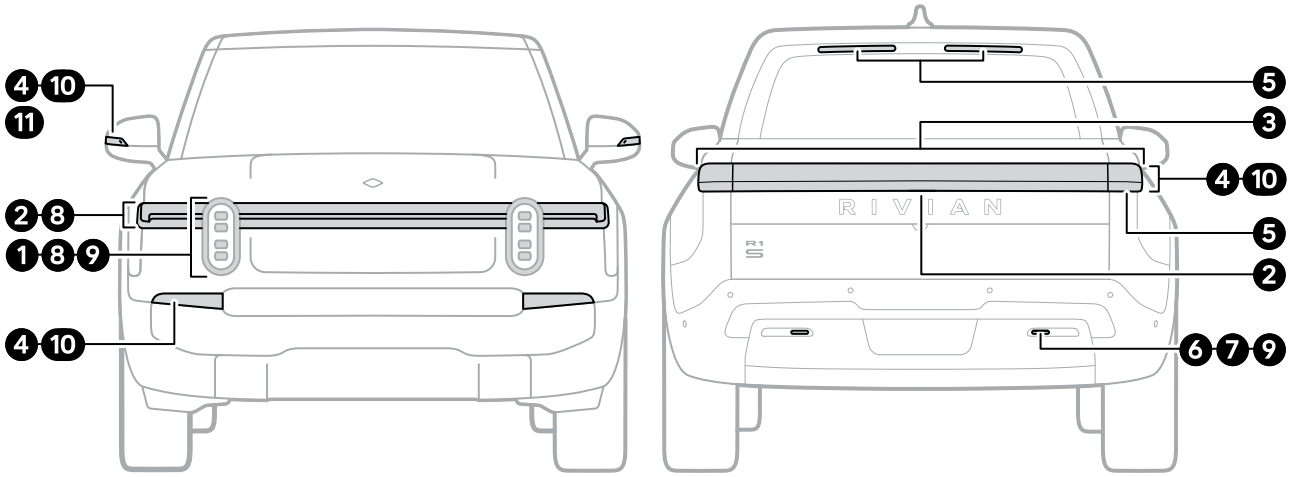

Item	Name	Description
1	Headlights	Lights at the front of vehicle cast a wide beam so you can see the road, objects, and pedestrians at night.
2	Center light bars	The light bars at the front and rear of the vehicle indicate the charge status. When the vehicle is charging, the light bars pulse green one segment at a time. The segments that stay green indicate the charging level. When the vehicle is at full charge, the light bars stay green. When the vehicle is locked, the light bars turn off.
3	Taillights	Red lights at the rear of the vehicle help ensure other drivers can see the vehicle at night.
4	Turn signals	Amber front turn signals and red rear turn signals alert other drivers that you plan to turn or change lanes.
5	Brake lights	Red lights at the rear of the vehicle and red light strips above the rear window alert other drivers when the vehicle slows or stops.
6	Fog lights	Rear fog lights help ensure other drivers can see the vehicle in foggy conditions.

Item	Name	Description
7	Reverse lights	White lights at the rear of the vehicle alert other drivers that the vehicle is in Reverse and may back up.
8	Daytime running lights or parking lights	Lights at the front and sides of the vehicle make it more visible to other drivers while you drive or park it. Daytime running lights are brighter than parking lights.
9	Guide lights	Lights at the front and rear of the vehicle help you and passengers see the surroundings at night.
10	Hazard lights	Amber front and red rear turn signals flash to alert other drivers of a hazard or emergency. In the event of an emergency or malfunction, press the **Hazard Lights** button on the overhead console to turn on the hazard lights and alert surrounding vehicles.
11	Flood lights	Lights behind the side mirrors allow you to easily view the area in front of your vehicle when it's dark outside. Choose **Camping** from the menu, or choose **Vehicle** from the status bar on the center display. Then choose a **Flood Light**, or , to turn a flood light on or off.

Side Lights

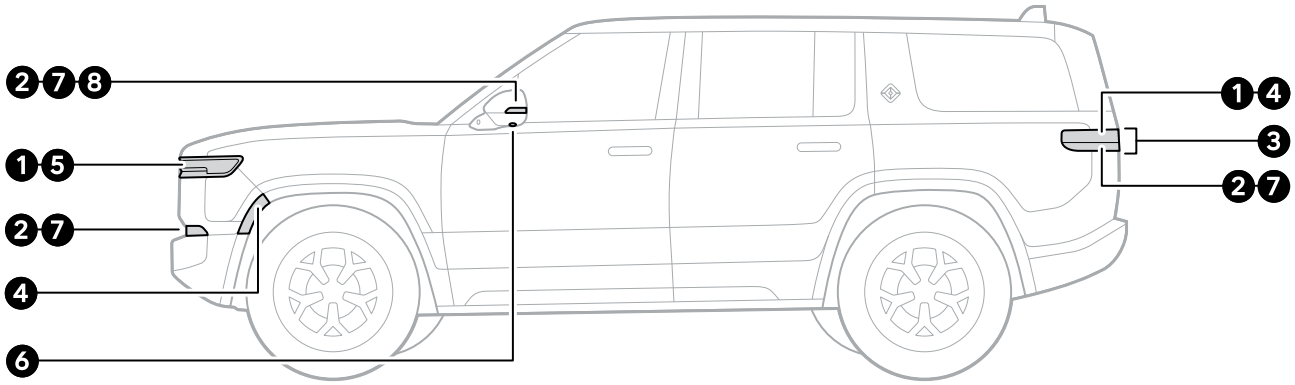

Item	Name	Description
1	Center light bars	The light bars at the front and rear of the vehicle indicate the charge status. When the vehicle is charging, the light bars pulse green one segment at a time. The segments that stay green indicate the charging level. When the vehicle is at full charge, the light bars stay green. When the vehicle is locked, the light bars turn off.
2	Turn signals	Amber front turn signals and red rear turn signals alert other drivers that you plan to turn or change lanes.
3	Brake lights	Red lights at the rear of the vehicle and red light strips above the rear window alert other drivers when the vehicle slows or stops.
4	Front and rear side markers	Lights and reflective markers make the vehicle more visible to other drivers during the day and night.
5	Daytime running lights or parking lights	Lights at the front and sides of the vehicle make it more visible to other drivers while you drive or park it. Daytime running lights are brighter than parking lights.

Item	Name	Description
6	Entry lights	Side mirrors project the Rivian Compass logo to light the ground when you unlock the vehicle. Note the following: • If enabled, the Entry Lights setting turns the entry lights on when you unlock the vehicle. • The lighting sequence setting turns the entry lights on when you unlock your vehicle from close proximity. • If you enable passive entry, the entry lights turn on when you approach the vehicle.
7	Hazard lights	Amber front and red rear turn signals flash to alert other drivers of a hazard or emergency. In the event of an emergency or malfunction, press the **Hazard Lights** button on the overhead console to turn on the hazard lights and alert surrounding vehicles.
8	Flood lights	Lights behind the side mirrors allow you to easily view the area in front of your vehicle when it's dark outside. Choose **Camping** from the menu, or choose **Vehicle** from the status bar on the center display. Then choose a **Flood Light**, or , to turn a flood light on or off.

Modifications to Exterior Body System

Exterior Panels and Trims

It is not recommended to modify exterior body panels. The upfitter is responsible for ensuring the structural integrity and compliance of the upfitted vehicle. The vehicle must comply with all federal and state regulations.

CAUTION

Be careful when drilling through exterior panels, to avoid damaging wire harnesses.

Recommended Fastener Torque Values

See the recommended fastener torque values for hard (all metal) joints, soft (mixed material) joints, and plastic tapping screws.

Doors

Do not modify the doors on the vehicle.

Roof

Glass Roof

The durable, laminated glass roof blocks more than 99.9% of ultraviolet (UV) light. The glass roof is not a load-bearing component. Any extra features attached to the roof by the upfitter will require additional support structures. The upfitter assumes responsibility for the reliability and compliance with FMVSS 205 for any replacement glass on the R1 roof.

Use Rivian-authorized roof glass and installation tools. Otherwise, there may be a risk of malfunction of sensors and seals around the roof glass. The roof glass remove and replace procedure is in the *R1S Service Manual*.

If the roof glass is replaced, the upfitter assumes responsibility for the reliability and compliance with relevant FMVSS standards for the new structure. If a different material roof structure is used, the roof may be subject to new requirements, such as FMVSS 201U head impacts, or FMVSS 302 flammability for interior headliner.

DANGER

The Polymer-Dispersed Liquid Crystal (PDLC) active tint glass roof is powered by 48 Vac so there is a potential electrical shock risk if this system is modified. Only properly trained technicians should perform work on these circuits.

For vehicles equipped with an active tint glass roof, if the glass is removed, use the appropriate plug in the connector that's used to power the dynamic glass roof.

Accessory Ports

Accessory ports allow you to install cargo crossbars. The crossbars are compatible with various accessories. They can also be used for cargo tie-downs.

Use Rivian-approved cargo crossbars to attach to the accessory ports for any additional payload. Do not modify the existing accessory ports unless approved by Rivian.

Accessory Port Ratings

Accessory ports are designed to withstand a maximum of 2,500 Newtons (N) or 551 lb (250 kg) per port. This is the safety threshold for how much load can be placed on the port without causing damage.

These are the locations of the accessory ports in the roof glass.

Accessory ports are also located along the roof over the cargo area.

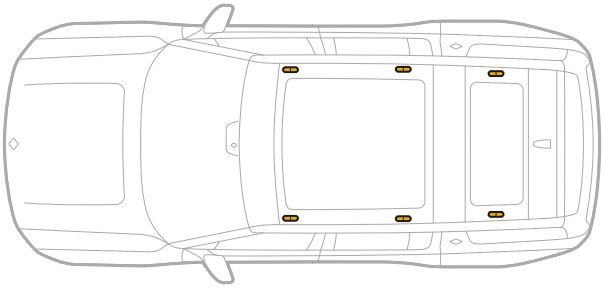

Roof Crossbars

Roof crossbars are rated to bear different loads depending on whether you are driving or parked.

- The maximum dynamic (driving) load is 250 lb (113 kg) per crossbar pair.
- The maximum static (parked) load is 780 lb (353 kg) per crossbar pair.

Any extra features attached to the roof by the upfitter will require additional support structures. The upfitter assumes responsibility for the reliability and compliance with relevant FMVSS standards for any alterations and attachments to the R1 roof.

Roof Structure

Do not drill, cut, weld, add structure, or modify the front roof header, rear roof header, or A-pillar/cant rail tube.

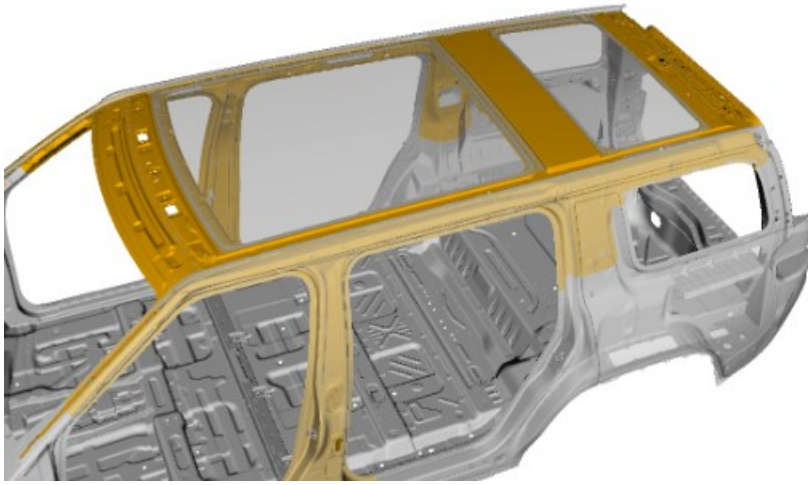

Floor

Do not drill or weld into the floor within the volume highlighted below. This volume is defined as a clearance zone around major parts—front drive unit, on-board charger (OBC/DC-DC), and the battery pack.

WARNING

Changes or reinforcements around the Restraints Control Module (RCM) can impact the deployment of the airbag, seat belt restraints, and high-voltage isolation. This could potentially cause uncontrolled deployments that may result in injury or death.

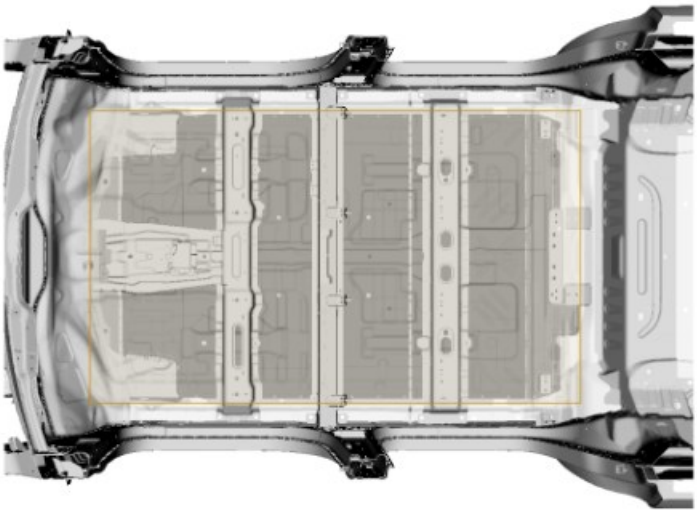

Measurement from the Front Drive Unit

Coordinates	Measurements
Lower X-packaging defined by the drive unit assembly	- 1 in (25 mm)
Upper X-packaging defined by the drive unit assembly	+ 1 in (25 mm)
Lower Y-packaging defined by the drive unit assembly	- 1 in (25 mm)
Upper Y-packaging defined by the drive unit assembly	+ 1 in (25 mm)
Lower Z-packaging defined by the drive unit assembly	- 1 in (25 mm)
Upper Z-packaging defined by the floor	+ 0 in (0 mm)

Measurement from the On-board Charging DC-DC Unit

Coordinates	Measurements
Lower X-packaging defined by the OBC or the DC-DC unit	- 1 in (25 mm)
Upper X-packaging defined by the OBC or the DC-DC unit	+ 1 in (25 mm)
Lower Y-packaging defined by the OBC or the DC-DC unit	- 1 in (25 mm)
Upper Y-packaging defined by the OBC or the DC-DC unit	+ 1 in (25 mm)
Lower Z-packaging defined by the OBC or the DC-DC unit	- 1 in (25 mm)
Upper Z-packaging defined by the floor	+ 0 in (0 mm)

Measurement from the Battery Pack

Coordinates	Measurements
Lower X-packaging defined by the leading edge of the last cabin crossmember edge	- 1 in (25 mm)
Upper X-packaging defined by the trailing edge of the 5th body crossmember edge	+ 1 in (25 mm)
Lower Y-packaging defined by the left-hand outer surface of the skateboard midrail	+ 0 in (0 mm)
Upper Y-packaging defined by the right-hand outer surface of the skateboard midrail	+ 0 in (0 mm)
Lower Z-packaging defined by the battery pack	- 1 in (25 mm)
Upper Z-packaging defined by the floor	+ 0 in (0 mm)

Any cutouts or openings created between the occupant space and the vehicle's underbody must be sealed so that no air can pass from under the vehicle into the cabin or cargo area. The upfitter should verify the placement of brake lines, coolant line routing, hydraulic brake line routing, front drive unit location, etc. The upfitter must ensure that the body crossmember integrity is maintained.

Do not modify the body attachment extrusions as they serve as side impact protection to the high-voltage battery pack.

CAUTION

Holes in the longitudinal frame member are the result of the production process and are not suitable for body mounting work. Do not use holes from the production process for mounting, as this could damage the frame. Holes in the longitudinal frame member are the result of the production process. Do not use them for mounting, as this could damage the frame.

DANGER

Drilling through the floor into the high-voltage battery may result in serious personal injury or death.

Crossmembers

No modifications should be made to the crossmembers under the floor.

WARNING

Changes or reinforcements around the Restraints Control Module (RCM) can impact the deployment of the airbag, seat belt restraints, and high-voltage isolation. This could potentially cause uncontrolled deployments that may result in injury or death.

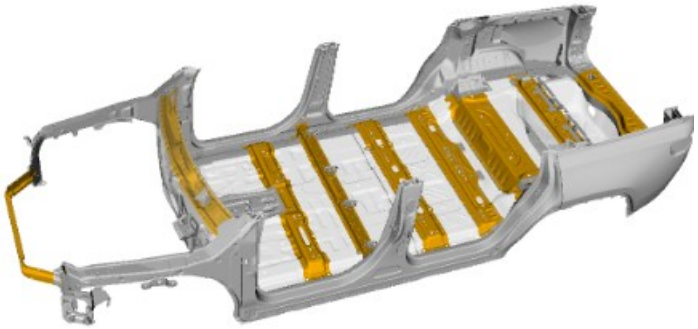

Exterior Lighting

The vehicle includes the following exterior lights:

- Front and rear lights
- Side lights

All exterior lights are DOT certified. Do not modify or relocate any lights. Installation of auxiliary lights cannot impair visibility or installation of DOT marked lights. The vehicle must comply with all federal and state regulations after the upfit. Remove and replace procedures can be found in the *Rivian Service Manual*.

Windshield

Use Rivian-authorized windshield and installation tools to prevent a malfunction of windshield sensors and seals. The windshield remove and replace procedure is in the *R1S Service Manual*, Labor Code 523410010.

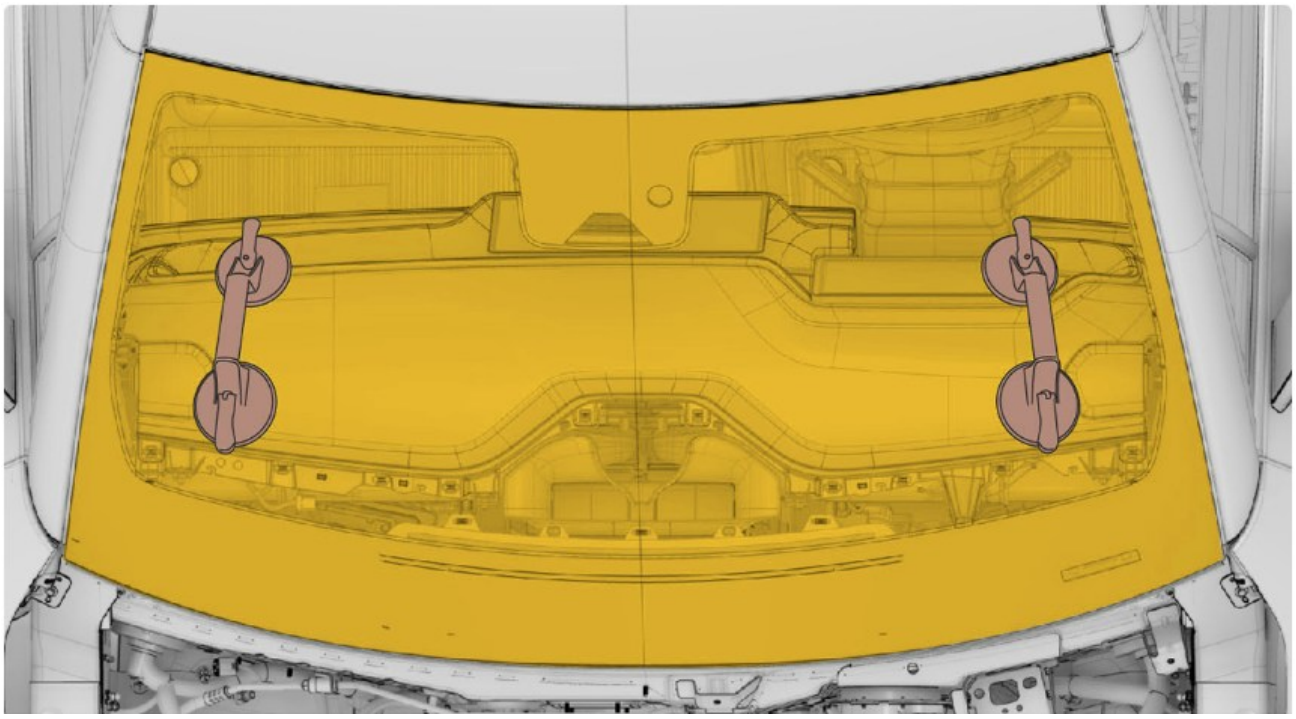

Badging and Decals

Ensure that any added decal or adhesive wrap does not interfere with the sensors, Autonomy systems, exterior lights, and washer nozzles.

Follow all local and federal regulations to keep the vehicle in compliance.

See the *Rivian Service Manual*, ADAS Service Documents for more details.

Spare Tire Port

Do not drill into, cut, weld, add structure to, or modify the area shown in yellow (top view) except with express written permission or approval from the Rivian Upfit Support Team.

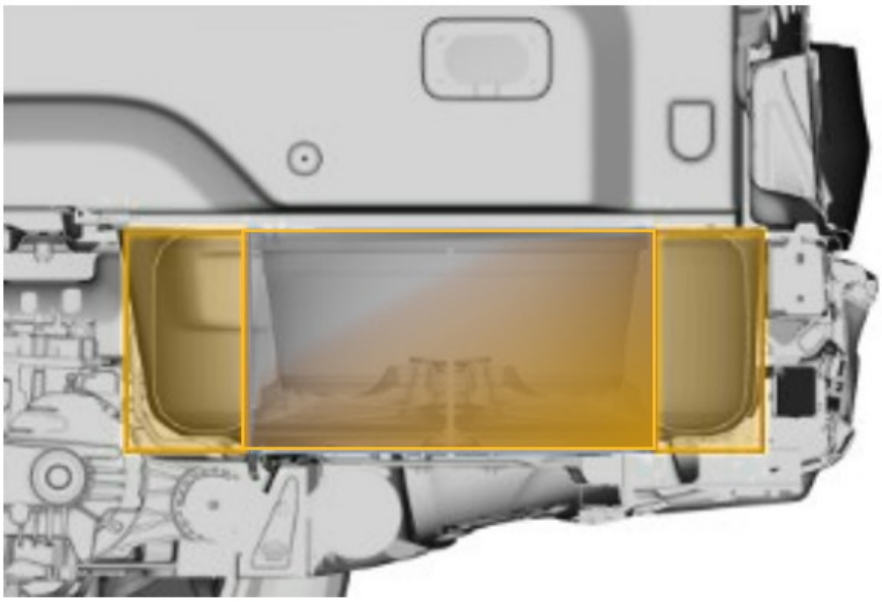

Front Trunk

In the front trunk:

- Do not add any permanent structure or rigid objects that would alter the crush zone of the vehicle.
- Do not drill into, cut, weld, add structure to, or modify the crossmembers highlighted with arrows in the image below.

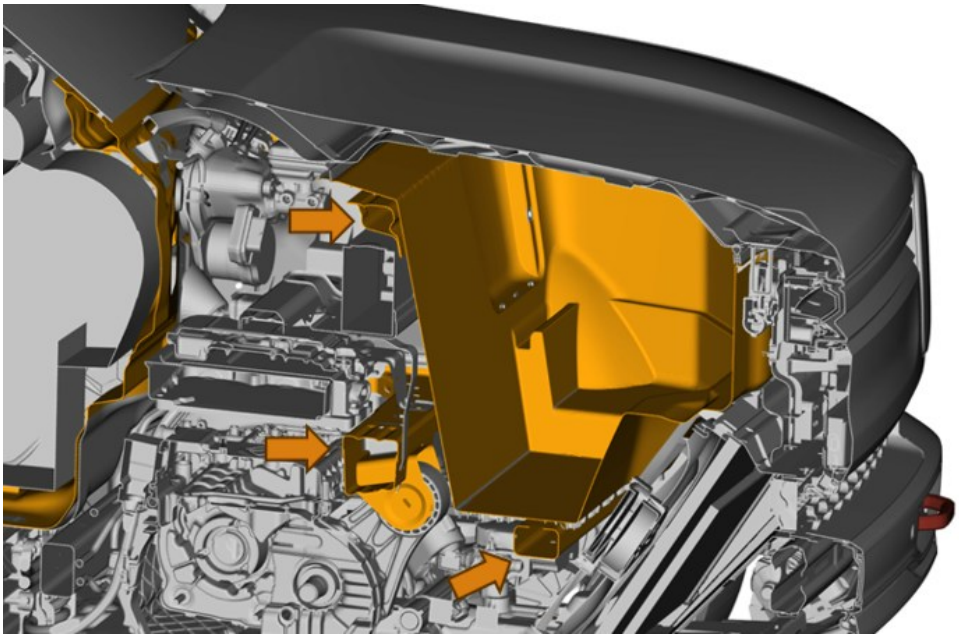

Tow Hooks

For vehicles equipped with tow hooks, they can be removed and added back on, with no changes required to airbag sensor calibration.

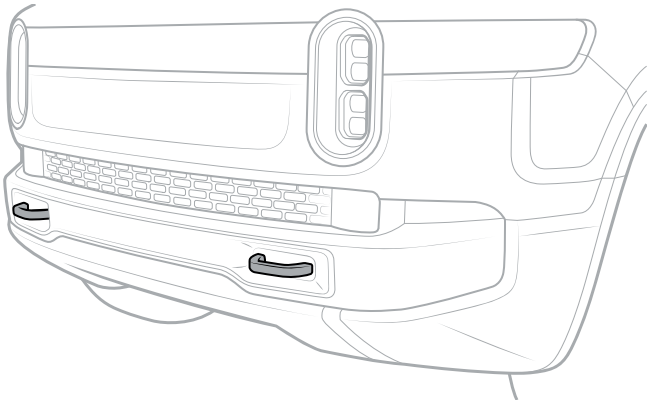

For vehicles not equipped with tow hooks:

- Do not add other structures (not approved or provided by Rivian) in place of the tow hooks
- If adding tow hooks is required, consult with the Rivian Upfit Support Team for additional requirements, and use only OEM Rivian tow hooks.

Powertrain and Thermal System

Powertrain System Overview

Front and Rear Drive Units

- Inverter: The inverter converts the direct current (DC) from the high-voltage battery into an alternating current (AC) to power the electric motor. It plays a crucial role in controlling the motor's speed and torque.
- Gearbox: The gearbox transmits power from the electric motor to the drive shaft. It ensures optimal power delivery and efficiency across various driving conditions.
- Drive Shaft: The drive shaft transfers the mechanical power from the gearbox to the wheels, enabling vehicle movement.

See the *Rivian Service Manual*, Front Drive Unit, Labor Code 38, for more information.

See the *Rivian Service Manual*, Rear Drive Unit, Labor Code 42, for more information.

High-Voltage (HV) Harness

- The high-voltage harness connects the high-voltage battery to the drive unit and other high-voltage systems within the vehicle. It ensures the safe and efficient transfer of electrical power throughout the powertrain system.
- The integration of these components ensures that the vehicle's powertrain system operates seamlessly, providing the necessary power and efficiency for commercial applications.

For more information on the powertrain system, see the Theory of Operations in the *Rivian Service Manual*.

Modifications to the Powertrain System

Do Not Modify

- Do not touch, drill, modify, or obscure the orange high-voltage cables, fasteners, channels, strain relief, grounding wire, or connections.
- Do not modify or move any high-voltage cable routings.
- Do not modify high-voltage grounding paths in any way.
- Do not modify the front drive unit or rear drive unit housings, mounts, and bushings (front drive unit and high-voltage cables).
- Do not modify the half-shafts in the front drive or rear drive units.
- Do not modify the onboard charger, the charging port, or the high-voltage cables and their corresponding routings (charging port, cables, and grounding strap for high-voltage battery shown).
- Do not modify or alter the on-board charger (OBC), the DC-DC converter, or the mounting plate.

Thermal Management System Overview

The vehicle's thermal management system efficiently maintains optimal temperatures for both passenger comfort and vehicle performance.

System components include:

- Climate Control: Manages the cabin temperature to ensure passenger comfort and optimal operating conditions for the vehicle's components.
- Condenser Radiator Fan Module: Cools the refrigerant and coolant, ensuring efficient heat exchange and maintaining optimal temperatures for the vehicle's systems.
- Coolant System: Circulates coolant to regulate the temperature of the vehicle's powertrain and other critical components.
- Refrigerant System: Manages the refrigerant flow to provide effective air conditioning and temperature control within the vehicle.

For more information on the Thermal Management system, see the *Rivian Service Manual*, Theory of Operations.

Modifications to the Thermal System

Safety Warnings

> **NOTE**
> The thermal management and the heating, ventilation, and air conditioning (HVAC) system are powered using high-voltage.

- Do not modify any of the thermal management lines.

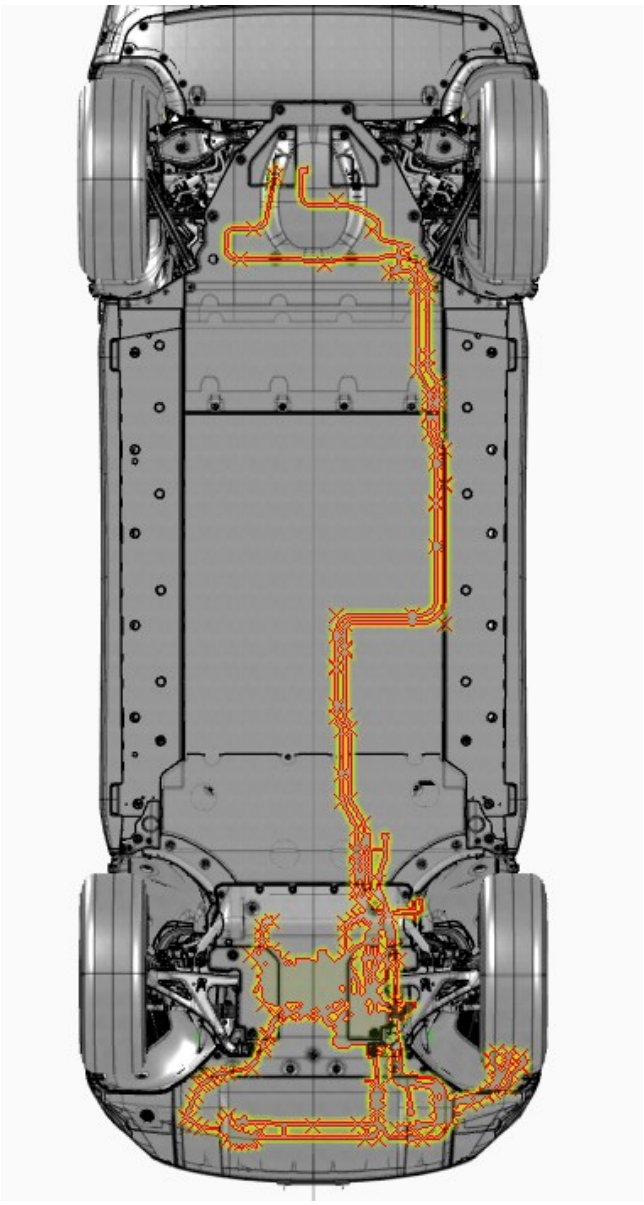

- Do not modify any of the high-voltage cables or their routing.

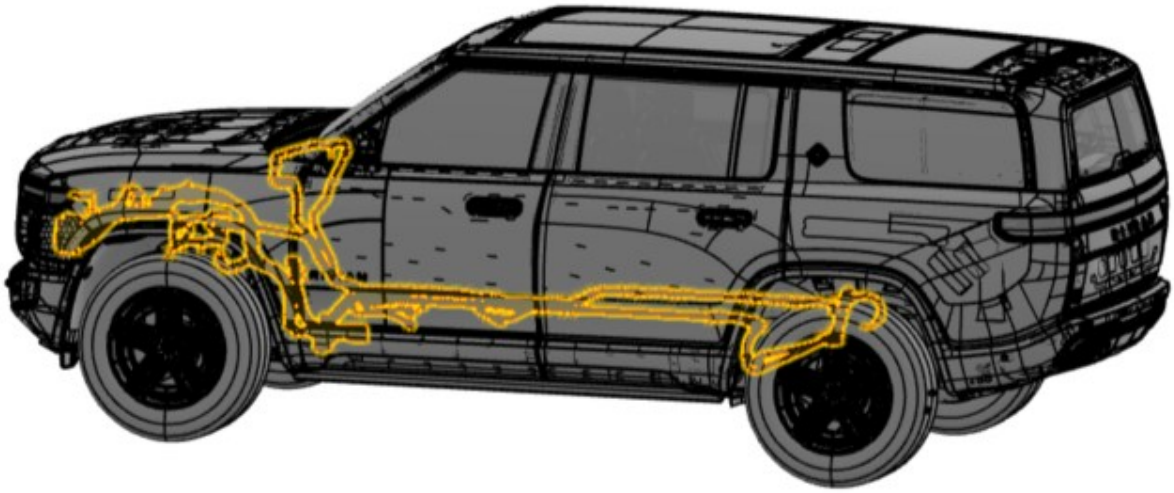

- Do not change the location of any of the thermal management or HVAC components.

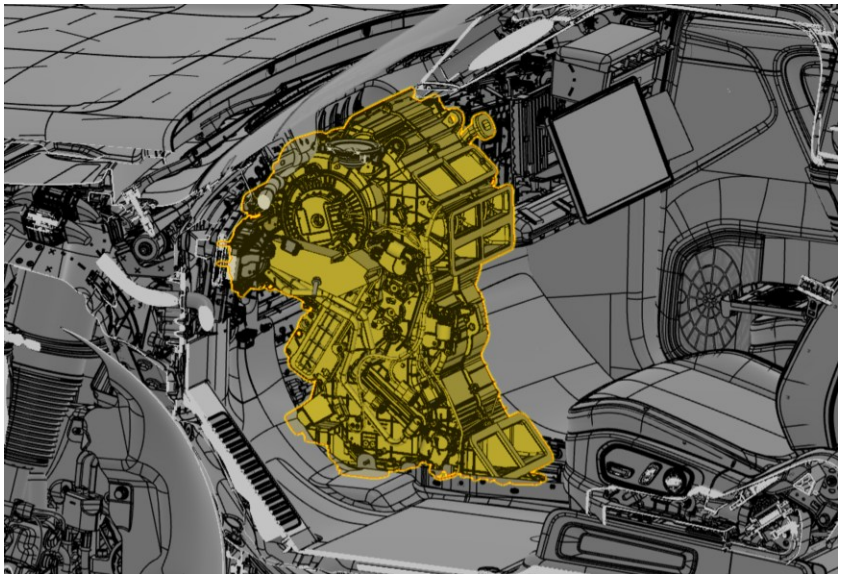

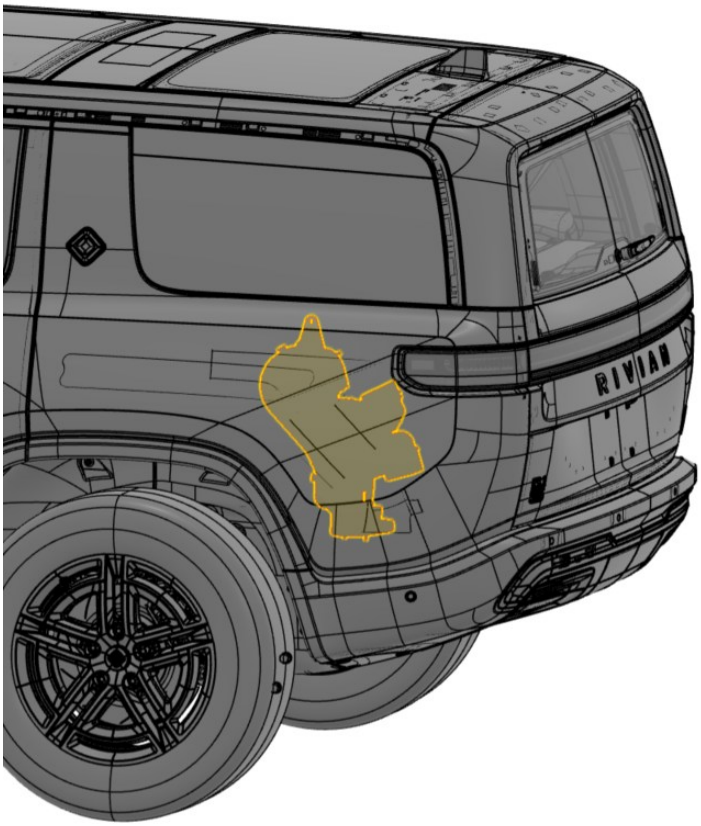

- Do not modify the mounting brackets of the air conditioning (AC) compressor.

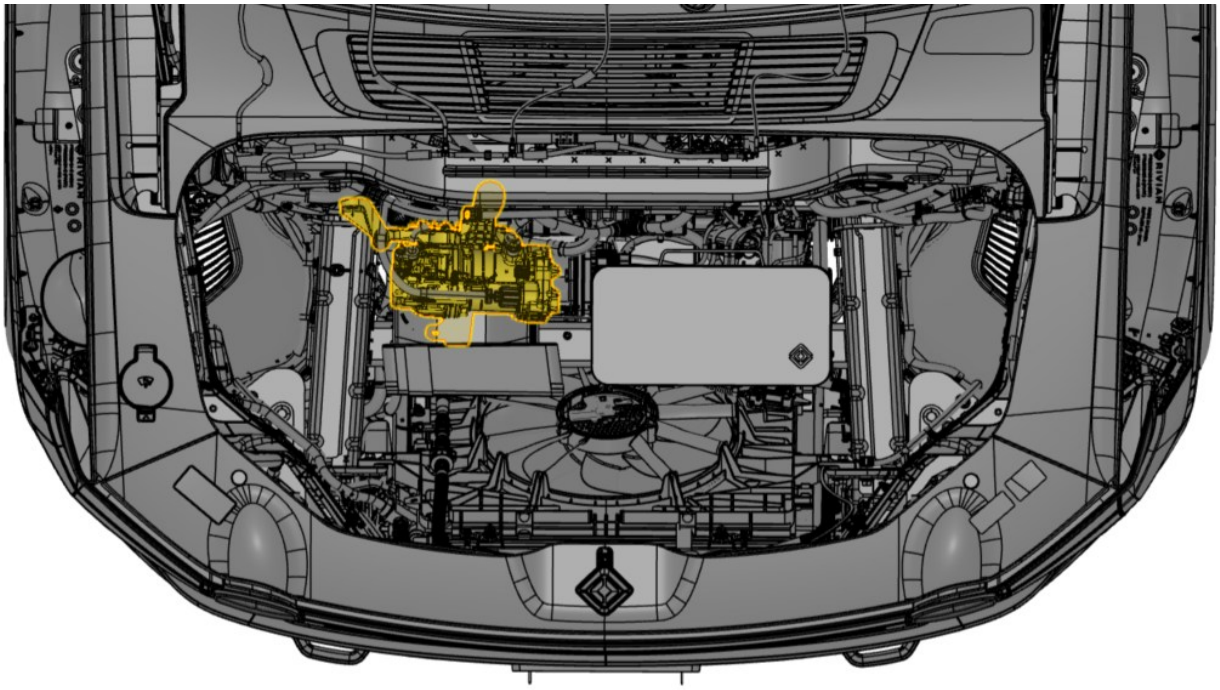

- When removing the HVAC module for service in the cabin, be sure to properly orient the sealing and drain valve to the floor before reinstalling. This is critical for keeping water out when driving through deep water.
- The HVAC filter is located in the cowl assembly, which is a wet zone. Use the appropriate Rivian-approved filter to meet the full service life.

Coolant Systems

To maintain optimal performance and safety, no modifications to the coolant system are allowed. This system plays a vital role in controlling the temperature of the vehicle's powertrain and other essential components. Unauthorized changes could reduce the system's effectiveness, cause overheating or other failures, and void the vehicle's warranty. Preserving the coolant system's original design by Rivian is essential.

Refrigerant System

The refrigerant system uses R-1234yf refrigerant. To ensure the optimal performance and safety of the vehicle, no modifications are allowed to the refrigerant system. This system is critical for managing the vehicle's air conditioning and temperature control. Unauthorized alterations could compromise the system's efficiency, lead to potential failures, and void the vehicle's warranty. It is essential to maintain the integrity of the refrigerant system as designed by Rivian.

Chassis System

Overview

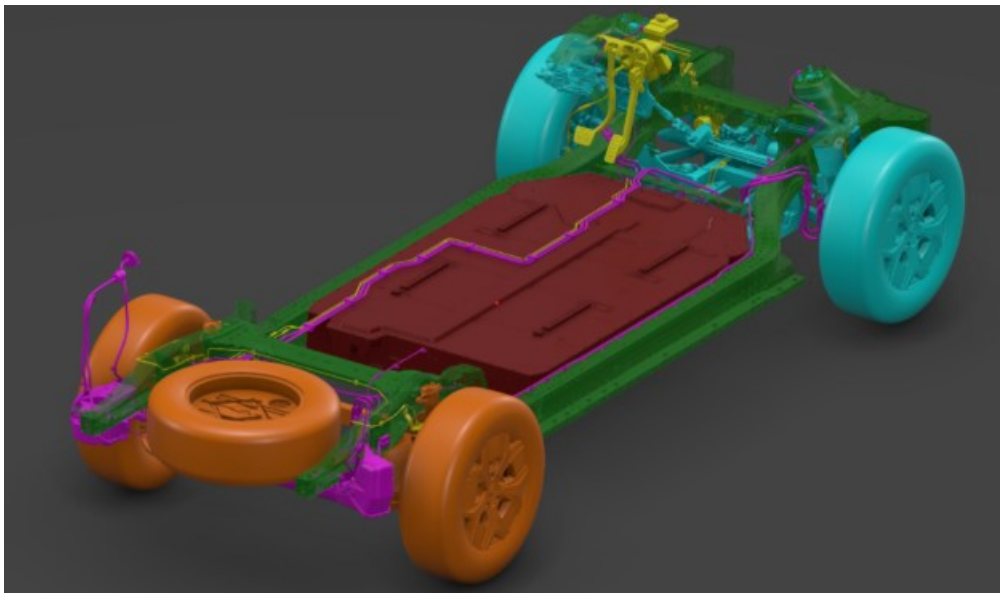

Color	Component
Green	Frame
Teal	Front chassis
Orange	Rear chassis
Yellow	Brakes
Pink	Auxiliary suspension

This section covers modifications to the following components:

- Suspension system: The suspension system ensures a smooth ride by absorbing shocks and maintaining vehicle stability. It includes components such as springs, dampers, and control arms.
- Subframe: The subframe supports suspension components, providing structural integrity and alignment.
- Rear axle: The rear axle supports the rear suspension, ensuring proper alignment and stability.
- Brake system: The brake system includes components such as brake pads, rotors, calipers, and brake lines, ensuring effective stopping power and vehicle safety.
- Hardware components: These include various bolts, nuts, and fasteners that secure different parts of the chassis system, ensuring structural integrity.

- Wheels and tires: The wheels and tires are crucial for vehicle traction, handling, and overall performance. This section covers modifications to wheel size, tire type, and alignment.
- Wheel alignment: Proper wheel alignment ensures that the vehicle drives straight and reduces tire wear. This section covers adjustments to camber, caster, and toe angles.
- Wheelbase: The wheelbase is the distance between the front and rear axles. Modifications to the wheelbase can affect vehicle stability and handling.
- Chassis frame: The chassis frame is the backbone of the vehicle, providing structural support for all other components. This section covers modifications to the frame for various upfit applications.
- Steering systems (Steering Column, Mid Shaft): The steering system includes the steering column and mid shaft, which are essential for vehicle control and maneuverability. This section covers modifications to these components.

For more information on the Chassis system, see the the *Rivian Service Manual*, Theory of Operations.

Modifications to Chassis Systems

This section provides critical guidelines and safety warnings for modifying the chassis systems of the vehicle. Adhering to these guidelines is essential for maintaining vehicle safety, performance, and reliability. Unauthorized modifications can compromise the structural integrity, handling, and crash sensor calibration of the vehicle. To ensure your vehicle remains compliant with Rivian's standards and operates safely, follow the detailed instructions below.

Safety Warnings

Do not drill, weld, or modify in any way:

- The front or rear suspension
- The front, mid, or rear skateboard
- The front bumper and crush can assembly. If replacement is necessary, use only an OEM Rivian provided bumper and crush can assembly. Modifying these areas, or using non-Rivian replacement parts, could affect crash sensor calibration.

Modifications of non-structural, aerodynamic devices (such as underbody aerodynamic shields) should not hinder the crash behavior of the vehicle.

Description	Illustration
Skateboard structure above	
Skateboard structure below	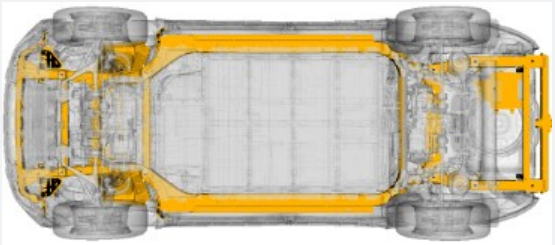
Front bumper	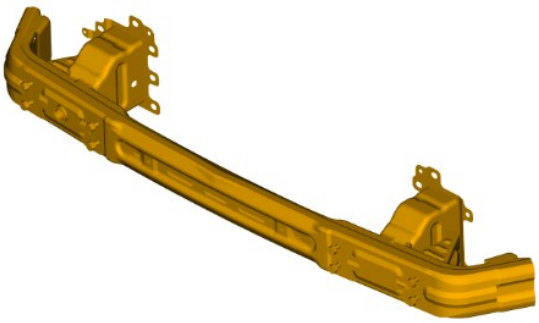

Suspension Systems

The suspension system connects the vehicle body to the wheels, allowing for relative motion between them to absorb bumps and provide a smooth ride. This system is built upon Rivian's skateboard platform, which acts as the vehicle's foundational frame. Its components, including springs and dampers, are engineered to work together to ensure vehicle stability and passenger comfort.

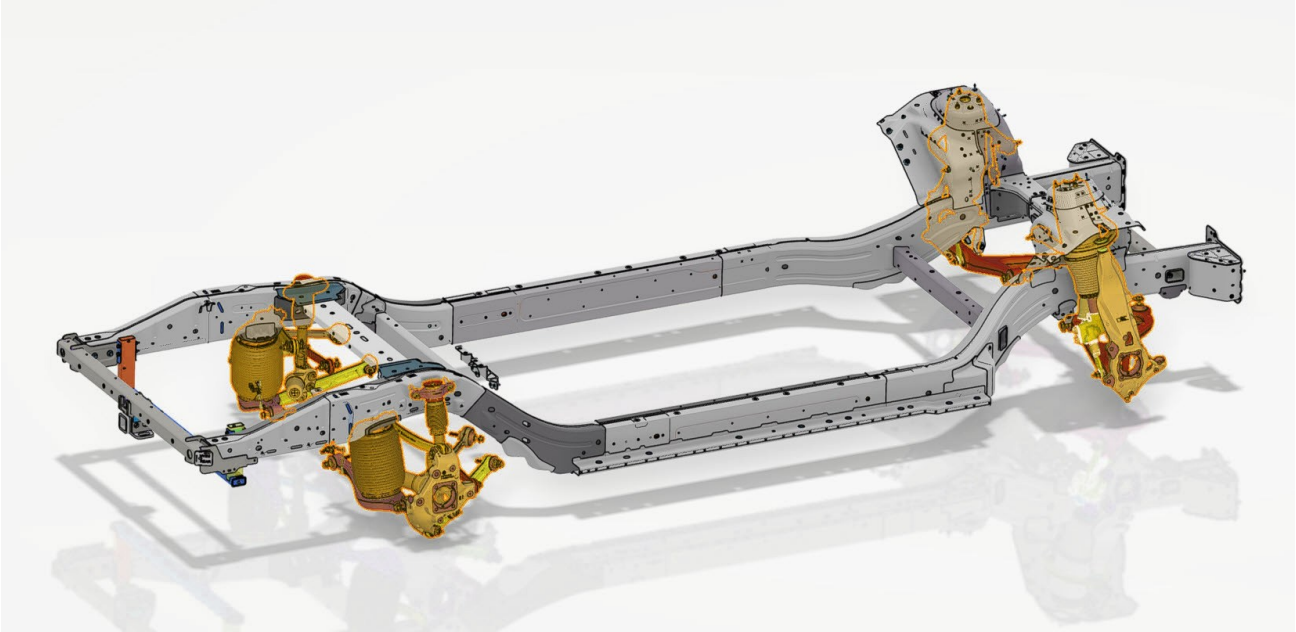

DANGER

Modifying suspension system components can lead to impaired and unstable vehicle handling, increasing the risk of accidents, injuries, and fatalities. Therefore, do not modify any part of the suspension system. This includes components such as springs, dampers, and control arms, which are precisely engineered to ensure vehicle stability and safety.

Subframe

The addition of assemblies, aftermarket products, or any modifications to the front subframe is strictly prohibited. The front subframe is a vital structural component that supports the vehicle's powertrain, suspension, and other critical systems. Unauthorized modifications can compromise the integrity and performance of the vehicle, leading to potential safety hazards, including structural failures and impaired handling.

Maintaining the original design and specifications of the front subframe is essential for ensuring the safety and reliability of the vehicle. Any alterations could void the vehicle's warranty and result in unforeseen issues.

Do not exceed permissible axle load values under any circumstances.

Rear Axle

The addition of assemblies, aftermarket products, or any modifications to the rear axle is strictly prohibited. The rear axle is a crucial structural component that supports the vehicle's suspension and other essential systems. Unauthorized modifications can compromise the integrity and performance of the vehicle, leading to potential safety hazards, including structural failures and impaired handling.

Maintaining the original design and specifications of the rear axle is vital for ensuring the vehicle's safety and reliability. Any alterations could void the vehicle's warranty and result in unforeseen issues.

Do not exceed permissible axle load values under any circumstances.

Brake Systems

The addition of assemblies, aftermarket products, or any modifications to the brakes or the braking system, including the traction control system, anti-lock braking system, and the electronic stability control system, is strictly prohibited. After the vehicle is completely upfitted, the brakes must be fully functional and comply with FMVSS/CMVSS 105 standards.

The brake fluid reservoir must remain accessible and visible for service. Do not modify the brake fluid reservoir. The front and rear brake hoses should not come into contact with the chassis or moving parts. Ensure that there is adequate clearance under all operating conditions. Do not modify the brake hoses.

Brake lines should not be employed to secure or support any components. If any brake system components get damaged during the upfit process, they must be replaced with Rivian OEM parts, and full functionality should be verified.

Maintaining the original design and specifications of the braking system is crucial for ensuring the vehicle's safety and reliability. Unauthorized modifications can compromise the integrity and performance of the braking system, leading to potential safety hazards, including impaired braking performance and increased risk of accidents.

Brake fluid must meet FMVSS 116. Use only Rivian Genuine DOT 4 Low Viscosity brake fluid.

Protection for Multi-Collision Braking

Do not make any modifications to the braking subsystem electronic control unit (ECU). In the event of a crash, the electronic stability platform module aids the driver in applying friction brakes to reduce the vehicle's speed to less than 2 mph (3 km/h) before coming to a standstill, at which point the parking brakes are applied. Modifying the ECU will affect the performance of the Multi-Collision Braking feature, potentially compromising vehicle safety.

Maintaining the original design and specifications of the braking subsystem ECU is crucial for ensuring the vehicle's safety and reliability. Unauthorized modifications can lead to impaired braking performance and increased risk of accidents.

Hardware Components

Installation or removal of hardware components, such as factory installed nuts, clips, and bolts, must be done in accordance with the procedures shown in the *Rivian Service Manual*.

Certain hardware, as described in the *Rivian Service Manual*, cannot be reused. Be sure to discard and not re-use it.

Wheels and Tires

Mount only Rivian-approved wheels and tires to the vehicle.

Mounting and de-mounting the wheels must be done in accordance with procedures laid out in the *Rivian Service Manual*.

The Tire Pressure Monitoring System (TPMS) cannot be modified, including both hardware and software. Maintaining the original TPMS is crucial for ensuring accurate tire pressure monitoring and vehicle safety.

Inflate tires to the tire pressure shown on the Tire Placard Label on the driver door B-pillar.

Wheel Alignment

To prolong tire life, you may make adjustments to the standard wheel alignment values (camber/toe-in, toe-out, etc.). Rivian recommends that you contact aftersalessupport@rivian.com when making these adjustments to ensure optimal performance and safety.

Proper wheel alignment is essential for maintaining tire health, vehicle handling, and overall safety. Consulting with the Rivian Upfit Support Team will help you achieve the best results while adhering to Rivian's standards.

Wheelbase

Do not alter the wheelbase, extend the length of the chassis, or modify the width of the vehicle. Maintaining the original dimensions of the chassis is crucial for ensuring vehicle stability, safety, and performance.

Unauthorized modifications can compromise the structural integrity and handling characteristics of the vehicle, leading to potential safety hazards.

Chassis Frame

No modification is allowed on the chassis frame. Do not drill holes in the chassis frame unless approved by the Rivian Upfit Support Team. Maintaining the integrity of the chassis frame is essential for vehicle safety and performance.

Unauthorized modifications can weaken the chassis structure, leading to potential safety hazards and compromised vehicle reliability.

Color	Component
Grey	R1S frame
Gold	R1S subframes

Steering System

No modifications are allowed to the power steering system or the steering column and the surrounding components (upper and lower shroud). Maintaining the original configuration of these components is crucial for ensuring vehicle safety and steering performance.

Modifications can compromise the functionality and reliability of the steering system, leading to potential safety hazards.

Electrical System

Overview

This section provides information and suggested best practices for mitigating an emergency with a Rivian electric vehicle when handling high-voltage components. See the Rivian R1S Emergency Response Guide for more information.

High-Voltage Battery Removal

Please refer to the *Rivian Service Manual*, Labor Code 301010010.

Electrical Precautions

Ensure that grease does not come into contact with electrical components and connectors. Grease can attract dirt, leading to electrical tracking (short circuits) or increased resistance.

Handle printed circuit boards exclusively at an electrostatic discharge (ESD) workstation. Always hold printed circuit boards by their edges. Wear gloves and additional PPE during handling.

Fire, Electrocution, and Inhalation Hazards

High-Voltage Lithium-Ion Battery Fires in Electrical Vehicles

High-voltage lithium-ion battery fires in electric vehicles differ from gasoline fires due to the chemical reactions within the battery and the presence of high-voltage electricity. While both types of fires are extremely dangerous, electric vehicle fires may present unique risks. Similar to gasoline vehicle fires, high-voltage lithium-ion battery fires can emit toxic and/or flammable gases that pose inhalation hazards. Always wear personal protective equipment (PPE), including a self-contained breathing apparatus (SCBA), and use the appropriate tools.

In case of a high-voltage battery emergency, perform the actions listed below.

First Secure the Vehicle and Disconnect High-Voltage

Make sure the vehicle is parked and secured from rolling. Stabilize the vehicle if it is not upright or is on an unstable surface.

Disconnect the high voltage by severing the cut loop to disconnect the battery from the vehicle. See the R1S Emergency Response Guide for further instructions. You can also access the guide by scanning the QR code on the driver-side door jamb.

Avoid Electrocution

Certain locations on the vehicle are unsafe to cut during a rescue operations or extrication.

De-energize the electric circuit or disconnect any damaged or burning vehicle that is connected to a charger.

Be Careful When Moving or Storing a Vehicle

Use caution when lifting the vehicle or working with submerged vehicles.

Tow the vehicle on a flatbed only.

After extinguishing a fire, store the vehicle away from other vehicles and buildings.

Avoid High-Voltage Dangers

Follow these instructions to avoid high-voltage dangers when working with a Rivian R1 vehicle:

- Always assume the vehicle is energized.
- Never cut or damage the Do Not Cut locations on the vehicle.
- Never touch or let tools come in contact with orange high-voltage cables.
- Do not touch any other exposed parts and cables.
- Use high-voltage insulated tools if possible.
- Wear personal protective equipment (PPE), insulated gloves, and a self-contained breathing apparatus (SCBA).

Voltages

DANGER

- The vehicle has low-voltage (12 V) and high-voltage (450 V) circuits. The high-voltage (HV) system can be energized any time the 12 V battery and first responder loop are connected. To fully disconnect the high-voltage system, refer to the *Rivian Service Manual*, Disable High Voltage, Labor Code 340010017.
- Only technicians who have been trained in High-Voltage Awareness are permitted to perform procedures on Rivian high-voltage systems. Proper personal protective equipment (PPE) and insulating high-voltage gloves with a minimum rating of class 00 (500V) must be worn any time a high-voltage cable is handled. Refer to the *Rivian Service Manual*, Vehicle Best Practices, for additional safety information.
- Ensure that multimeters and leads are capable of handling at least 500 V before performing a procedure that involves high-voltage.
- Never disconnect or cut an orange high-voltage power cable or high-voltage component unless the high-voltage system has been disabled.
- After disabling the vehicle, power is maintained for 30 seconds in the Supplemental Restraints System (airbags and pretensioners) and 1 minute in the high-voltage electrical system.
- Never cut the high-voltage battery enclosure.
- Do not touch, drill, modify, or obscure the high-voltage cables, fasteners, channels, strain relief, ground wire, or high-voltage connectors. Do not modify or move any high-voltage cabling routings in any way. Do not modify the high-voltage grounding paths in any way.
- Service of the high-voltage system on this vehicle is strictly restricted to qualified personnel only. The required qualifications vary by region. Always observe local laws and legislative directives regarding electric vehicle service. Failure to follow the instruction may result in serious personal injury or death.
- To prevent the risk of high-voltage shock, always follow precisely all warnings and service instructions, including instructions to de-energize the system. The high-voltage system utilizes approximately 450 VDC, provided through high-voltage cables to its components and modules. The high-voltage cables and wiring are identified by orange harness tape or orange wire covering. All high-voltage components are marked with a high-voltage symbol.
- De-energizing the high-voltage system does not dissipate the voltage inside the high-voltage battery pack. The battery pack remains live and dangerous. Contact with the high-voltage battery pack internals may result in a serious personal injury or death.
- Powertrain software calibrations must not be modified within the vehicle.

High-Voltage Battery

The high-voltage (HV) battery stores all the energy required for the motor and vehicle electrical systems. The battery is equipped with sensors to detect various conditions that could potentially damage the vehicle or pose a safety risk. In such circumstances, the battery's primary response is to disconnect the high voltage from the rest of the vehicle.

When the battery is not installed in a vehicle, high voltage is not accessible without removing the enclosure cover.

There are multiple high-voltage batteries available on Rivian vehicles. Refer to the *Rivian Service Manual,* Theory of Operations for details.

DANGER

- Always remove the high-voltage battery before performing any procedure that might require using a drill near the high-voltage battery, especially drilling downward from inside the vehicle.
- A high-voltage battery poses a significant high voltage and electrocution risk if the outer enclosure or safety circuits have been compromised or have been significantly damaged.
- If the battery or vehicle displays signs of escaping gases, smoke, flames, excessive heat, sparks or arcing, contact the local emergency department and refer to the R1S Emergency Response Guide. Gases or smoke exiting a lithium-ion high-voltage battery are likely flammable and could ignite at any time.

Electrical Connectors and Harnesses

Be sure to follow these guidelines to stay safe:

- Never pull on a wiring harness or an individual wire to disconnect an electrical connector.
- Never use tools to force connectors apart.
- Ensure that disconnected connectors and sensors are protected from oil, coolant, water, and other contaminants.
- Ensure that electrical items are dry and free of oil or grease before disconnecting and connecting test equipment.
- After reconnecting an electrical connector, lightly pull on it to ensure that it is secured.
- When replacing a component, keep oily hands away from electrical connection areas.
- Ensure that any protection (cover, insulation, etc.) is replaced if disturbed.

Grease for Electrical Connectors

Certain underhood and underbody connectors are protected against corrosion by the application of a special grease during vehicle assembly. When repairing or replacing these connectors, apply the appropriate grease as specified by the *Rivian Service Manual*. Do not use alternative greases, as incorrect grease can migrate into relays, switches, and other components, contaminating the contacts and causing intermittent operation or failure.

Do not apply grease to any connectors that do not have grease applied from the factory.

Emergency Response to Electrical Shock or Battery Exposure

Seek immediate medical assistance if an electrical shock or electrocution has occurred or is suspected.

Under normal conditions, technicians are not exposed to the contents of the high-voltage (HV) battery cells. If materials from a ruptured or otherwise damaged battery come into contact with skin, flush the area immediately with water and wash with soap and water. Avoid inhaling any vented gases. If a chemical burn occurs or if irritation persists, seek medical assistance. For eye contact, flush with significant amounts of water for 15 minutes and consult a physician immediately.

DANGER

- A high-voltage battery poses a significantly high-voltage and electrocution risk if the outer enclosure or safety circuits have been compromised or have been significantly damaged.
- Avoid contact with gases escaping from a damaged battery. Vented gases might irritate the eyes, skin, and throat. Vent gas temperatures can exceed 100°F (600°C). Contact with hot gases can cause burns.

High-Voltage Battery Storage Precautions

WARNING

- Do not store high-voltage batteries below 4°F (-20°C).
- Do not store high-voltage batteries for over 10 days above 95°F (35°C).
- Do not charge or discharge a high-voltage battery below 32°F (0°C).
- Do not store high-voltage batteries for more than 30 days at full state of charge (SOC) or completely discharged.
- Do not weld near high-voltage batteries.

Install the following covers on the high-voltage battery quick-connect covers before storing the high-voltage battery:

- Coolant quick connect covers the coolant connector.
- High-voltage battery quick connect safety cover on the high-voltage connector.
- Low-voltage quick connect safety cover on the low-voltage connector.

NOTE

If either quick connect safety cover is not available, cover the connector with 3M 2480S masking tape or 3M 471 vinyl tape.

High-voltage batteries should be stored in a dry area, in approved packaging or on non-conductive surfaces. To reduce the risk of accidental shorting, ensure that there are no loose metal or other conductive materials near stored batteries.

High-voltage batteries should not be stored longer than 9 months since battery service life likely will be affected. If longer storage is anticipated, contact aftersalessupport@rivian.com for instructions.

High-Voltage Battery Disposal Procedures

The lithium-ion cells in the battery do not contain heavy metals like lead, cadmium, or mercury.

High-voltage batteries should be disposed of or recycled in accordance with local, state, and federal regulations. Regulations regarding disposal of batteries vary by jurisdiction. In the United States, batteries are classified as Universal Waste, and in addition, many individual states have specific regulations regarding disposal of batteries.

High-voltage batteries contain recyclable materials. Rivian strongly encourages recycling. Rivian recommends that all high-voltage batteries be taken to a Rivian Service Center so that they can be evaluated and recycled safely and efficiently.

If disposing of a battery without returning it to Rivian, consult with local, state, and/or federal authorities on the appropriate methods for disposal and recycling.

Vehicle Export Power

Rivian is responsible for designing, validating, approving, and installing Electric Vehicle Export Power Systems.

If your vehicle requires any vehicle export power system, always ask Rivian first about your needs before installing any equipment to the high-voltage system.

What is Electric Vehicle Power Export Equipment (EVPE)?

The equipment, including the outlet on the vehicle, that is used to provide electrical power at voltages greater than or equal to 30 VAC or 60 VDC to loads external to the vehicle, using the vehicle as the source of supply.

What is Required for EVPE?

EVPE requires either bi-directional energy flow from the inverter to the vehicle and/or unidirectional flow from the inverter to the destination, depending on the use case.

EVPE also requires:

- Vehicle enabled for EVPE
- Unidirectional or bidirectional DCAC Inverter
- Wire harnesses
- Communication and signaling
- Cooling system
- Safety requirements, such as Ground-Fault Circuit-Interrupter Protection

High-Voltage Distribution System

Overview

The High-Voltage (HV) Distribution System in the Rivian R1S is a critical component that ensures efficient power management and distribution throughout the vehicle. This system includes the charge port, onboard charger, DC-DC converter, and HV harnesses and connectors. Each of these components plays a vital role in maintaining the vehicle's electrical performance and safety.

- Charge Port: The charge port is the interface through which the vehicle connects to external power sources for charging. It is designed to support various charging standards and ensures safe and efficient energy transfer to the vehicle's battery.
- Onboard Charger: The onboard charger converts AC power from external charging stations into DC power, which is then used to charge the vehicle's high-voltage battery. This component is essential for enabling convenient and flexible charging options.
- DC-DC Converter: The DC-DC converter steps down the high-voltage DC power from the vehicle's battery to a lower voltage, which is used to power the vehicle's low-voltage systems and accessories. This ensures that all electrical components receive the appropriate voltage for optimal operation.
- High-Voltage Harnesses and Connectors: The high-voltage harnesses and connectors are responsible for safely transmitting high-voltage power between various components of the vehicle. These elements are designed to handle high power loads while ensuring insulation and protection against electrical faults.

For detailed operational information and safety guidelines, refer to the *Rivian Service Manual*, Theory of Operations, High Voltage Distribution, Labor Code 34. Adhering to these guidelines is crucial for maintaining the safety and reliability of the High-Voltage Distribution System.

Do Not Cut

Never cut or damage the highlighted areas.

NOTE

The actual location of components and cables may vary.

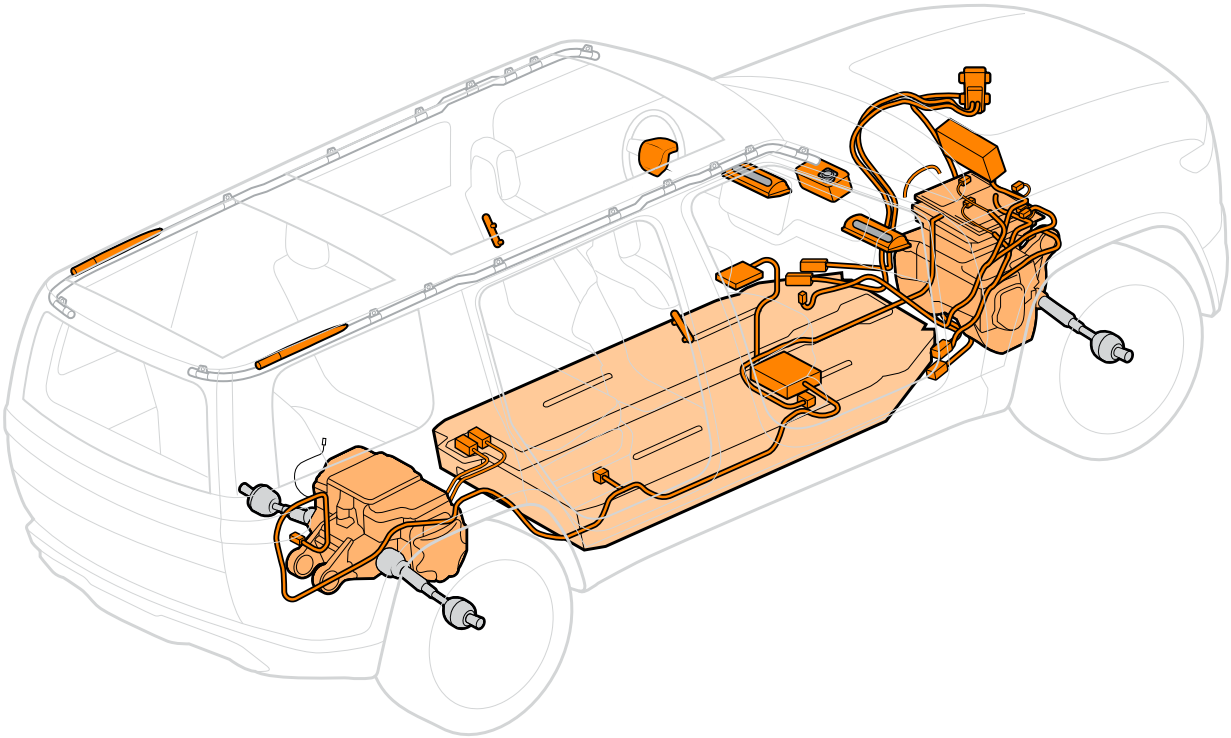

DANGER

- You could be injured, electrocuted, or die if you cut, pierce, or damage the highlighted areas.
- These areas contain lithium ion battery packs, high-voltage cables (up to 450 V), electrical outlet cables (120 V), traditional car batteries (12 V), compressed gas, and triggering devices.

Charge Port

Do not modify the charge port. The charge port is a critical component that ensures safe and efficient energy transfer from external power sources to the vehicle's battery. Unauthorized modifications can compromise the integrity of the charging system, leading to potential safety hazards and reduced charging efficiency. Always adhere to Rivian's guidelines to maintain the safety and reliability of the High-Voltage Distribution System.

Onboard Charger

Do not modify the onboard charger. The onboard charger is essential for converting AC power from external charging stations into DC power for the vehicle's high-voltage battery. Unauthorized modifications can disrupt this conversion process, potentially causing safety hazards, charging inefficiencies, and damage to the vehicle's electrical system. To ensure the safety and reliability of the High-Voltage Distribution System, always follow Rivian's guidelines and avoid any alterations to the onboard charger.

> **NOTE**
>
> Vehicles equipped with CCS1 charge ports can use NACS adapters, but the charge port cannot be updated to NACS without performing other updates to the vehicle.

DC-DC Converter

Do not modify the DC-DC converter. The DC-DC converter is a crucial component that steps down high-voltage DC power from the vehicle's battery to a lower voltage, which powers the vehicle's low-voltage systems and accessories. Unauthorized modifications can interfere with this voltage conversion process, leading to potential safety risks, electrical malfunctions, and damage to the vehicle's systems. To maintain the safety and reliability of the High-Voltage Distribution System, always adhere to Rivian's guidelines and avoid any alterations to the DC-DC converter.

Energy Storage Systems

Overview

The Energy Storage System (ESS), also referred to as the High-Voltage (HV) Battery, is a critical component designed to provide reliable and efficient power for the vehicle's operations. For detailed operational information and safety guidelines, refer to the *Rivian Service Manual*, Theory of Operations, Labor Code 30.

The Energy Storage System comprises several key components:

- High-Voltage Battery Assembly: This is the complete battery unit, including all internal components and housing.
- High-Voltage Battery Housing: This provides structural integrity and protection for the internal components of the battery.
- High-Voltage Battery Busbars: These conduct high-voltage electricity within the battery pack, ensuring efficient power distribution.
- High-Voltage Battery Internal Harnesses and Connectors: These facilitate electrical connections between the various components within the battery pack.
- High-Voltage Battery Fuses and Switching: These components protect the battery and vehicle systems by interrupting the flow of electricity in case of a fault.
- High-Voltage Battery Control Modules: These modules manage the battery's performance, including monitoring the state of charge (SOC) and ensuring safe operation.
- High-Voltage Battery Thermal Management: This system maintains optimal operating temperatures for the battery, enhancing performance and longevity.
- High-Voltage Battery Energy Modules: These are the individual cells or groups of cells that store electrical energy within the battery pack.

Energy Storage System Modifications

Safety Warnings

- Do not grind, cut, drill, or modify in any way the high-voltage battery pack, battery casing, or skateboard midrails that support the battery pack.
- Do not modify orange high-voltage connectors or cables.
- Do not ground welding equipment to the high-voltage battery pack, battery casing, or the skateboard midrails that support the battery pack.
- The high-voltage battery pack has a floating reference, which is designed to have the high-voltage system completely isolated from the vehicle chassis. As such, the high-voltage system is not grounded to the body/chassis in the same way as the low-voltage system. Although the high-voltage battery pack can be disconnected and de-energized, the high-voltage battery pack, including the high-voltage ground, remains live and dangerous.
- Do not make any modifications to high-voltage components as that can directly impact the system integrity and isolation resistance requirements from the vehicle chassis.

High-Voltage Battery Assembly

The battery pack is equipped with two exhaust vents. To ensure proper ventilation and safety, no additional components or obstructions should be placed within 6 in (150 mm) of these vents in the vehicle's underbody. Furthermore, to prevent potential fire hazards, no components that may contain combustible liquids or gases at any time should be added within 12 in (300 mm) of these vents.

No modifications or components are permitted that restrict or confine airflow to the battery pack beyond the original installation by Rivian. If additional ingress or egress paths are to be added to the cargo area, shielding must be installed to divert airflow away from the battery pack and the newly added paths. Any cutouts or openings created between the occupant space and the vehicle's underbody must be sealed to prevent air from passing into the occupant space. When working around the exhaust vents, ensure they are masked and protected from debris to maintain proper ventilation and safety.

High-Voltage Battery Housing

Do not modify the High-Voltage Battery Housing. The High-Voltage Battery Housing is crucial for maintaining the structural integrity and protection of the internal components of the battery. Any modifications could compromise the safety and performance of the battery system, potentially leading to electrical hazards, reduced efficiency, or even catastrophic failure. It is designed to withstand various environmental conditions and impacts, ensuring the longevity and reliability of the battery pack.

High-Voltage Battery Busbars

Do not modify the High-Voltage Battery Busbars. These busbars conduct high-voltage electricity within the battery pack, ensuring efficient power distribution. Any modifications to the busbars could disrupt the electrical flow, leading to potential safety hazards such as short circuits, overheating, or electrical fires. The busbars are designed to handle specific electrical loads and altering them could compromise the battery pack's performance and safety. Proper functioning of the busbars is essential for the overall efficiency and reliability of the vehicle's electrical system.

High-Voltage Battery Internal Harnesses and Connectors

Do not modify the High-Voltage Battery Internal Harnesses and Connectors. These components facilitate electrical connections between the various parts within the battery pack. Any modifications to the internal harnesses and connectors could disrupt these critical connections, leading to potential safety hazards such as short circuits, electrical arcing, or system malfunctions. The internal harnesses and connectors are specifically designed to handle the high-voltage requirements and environmental conditions within the battery pack. Altering them could compromise the integrity and reliability of the entire battery system, affecting the vehicle's performance and safety.

High-Voltage Battery Fuses and Switching

Do not modify the High-Voltage Battery Fuses and Switching. These components are critical for protecting the battery and vehicle systems by interrupting the flow of electricity in case of a fault. Any modifications to the fuses and switching mechanisms could compromise their ability to detect and respond to electrical faults, leading to potential safety hazards such as electrical fires, system failures, or damage to the battery pack. The fuses and switching components are specifically engineered to handle the high-voltage environment and ensure the safe operation of the vehicle. Altering them could jeopardize the overall safety and reliability of the vehicle's electrical system.

High-Voltage Battery Control Modules

Do not modify the High-Voltage Battery Control Modules. These modules are responsible for managing the battery's performance, including monitoring the state of charge (SOC) and ensuring safe operation. Any modifications to the control modules could disrupt their ability to accurately monitor and regulate the battery's functions, leading to potential safety hazards such as overcharging, overheating, or system malfunctions. The control modules are designed to work within specific parameters to maintain the battery's efficiency, longevity, and safety. Altering them could compromise the overall performance and reliability of the vehicle's electrical system.

High-Voltage Battery Thermal Management

Do not modify the High-Voltage Battery Thermal Management system. This system is crucial for maintaining optimal operating temperatures for the battery, thereby enhancing its performance and longevity. Any modifications to the thermal management system could disrupt its ability to regulate temperatures effectively, leading to potential safety hazards such as overheating, thermal runaway, or reduced battery efficiency. The thermal management system is specifically designed to handle the high thermal loads and environmental conditions within the battery pack. Altering it could compromise the overall safety, reliability, and lifespan of the vehicle's electrical system.

High-Voltage Battery Energy Modules

Do not modify the High-Voltage Battery Energy Modules. These modules consist of individual cells or groups of cells that store electrical energy within the battery pack. Any modifications to the energy modules could disrupt the delicate balance required for optimal performance, leading to potential safety hazards such as thermal runaway, cell imbalance, or reduced energy storage capacity. The energy modules are engineered to work cohesively to ensure the battery pack's efficiency, longevity, and safety. Altering them could compromise the overall integrity and reliability of the vehicle's electrical system, affecting both performance and safety.

Low-Voltage Systems

Overview

The low-voltage system is responsible for managing various electrical components that operate at lower voltages compared to the high-voltage battery system. This system ensures the proper functioning of essential vehicle features and enhances overall safety and convenience. For detailed operational information, please refer to the *Rivian Service Manual*, Theory of Operations, Low-Voltage Systems, Labor Code 78.

The low-voltage system includes the components described below.

Low-Voltage Electronic Control Modules

There are two central electronic control modules (ECMs) up front (West and East Zone Controllers) and another ECM in the rear (South Zone Controller). These ECMs manage, monitor, and control various subsystems, including sensors, actuators, and auxiliary systems. This ensures efficient operation and coordination of key vehicle functions.

Do not modify low-voltage electronic control modules.

Wipers and Washers

This component ensures clear visibility by controlling the windshield wipers and washer fluid systems. The windshield wiper/washer system is homologated per FMVSS 104 and should not be modified. If any modifications are made, the system must still meet FMVSS 104. When working on these components, refer to the *Rivian Service Manual*, Labor Code 781430010.

Communications Modules

Connectivity and telematics systems in modern vehicles enable communication and information sharing with external systems such as other vehicles, the cloud, Wi-Fi networks, charging stations, satellites, and cellular networks.

The Rivian telematics and connectivity system enhances the ownership experience by acting as a data pipeline between the vehicle and the Rivian Cloud, enabling software updates for new or improved features. It provides cellular, Wi-Fi®, *Bluetooth*®, and GNSS connectivity, supporting infotainment applications, data streaming, emergency calls, and an in-vehicle Wi-Fi hotspot.

Do not modify the communications modules.

Display Screens

Modern vehicles require interaction and feedback between the vehicle, driver, and passengers. The infotainment system serves as the Human Machine Interface (HMI), providing essential information and control over features like HVAC, drive modes, blinkers, and wipers through voice commands, stalk movements, or touch displays.

The Rivian infotainment system, including the eXperience Management Module (XMM) and other hardware, enhances the in-vehicle user experience by providing an interface between the vehicle and the customer through audio and visual means.

Do not modify the Rivian display screens.

Antennas

Rivian vehicles utilize various antennas in different locations to enable vehicle communications. These include antennas for the Global Navigation Satellite System (GNSS), LTE for cellular connectivity, Wi-Fi, and Bluetooth.

Do not modify any of these antennas.

Exterior Audio

The Acoustic Vehicle Alert System (AVAS) is a pedestrian warning system designed to meet global regulations requiring electric vehicles to produce a minimum noise level for pedestrian safety. Integrated into the vehicle architecture via a Controlled Area Network (CAN) bus, AVAS automatically generates a wide frequency range of sounds that change in pitch and volume based on vehicle speed and acceleration. The system activates when the vehicle shifts out of **P** (Park) and increases in pitch and volume as speed increases.

Do not modify this system.

12 V Battery

This battery provides power to the low-voltage system and ensures the operation of essential components. It is located under the front passenger seat.

Access and Authentication

The Vehicle Access System (VAS) is responsible for authenticating users to a vehicle. Once authenticated, users can remotely lock/unlock and open most vehicle closures, engage the alarm, and access various other features. The VAS achieves this functionality through a combination of hardware and software.

Modifications to Low-Voltage Systems

General Information

Modifications to electronic components, their software, or their wiring can impair the functioning of those electronic components and other networked components. Safety-relevant systems in particular may be affected. Because of this, they may no longer function properly and compromise the operational safety of the vehicle.

There is a heightened risk of accidents and injury. Never carry out any modifications to the existing wiring and electronic components or their software. Have all work on electrical and electronic equipment carried out at a qualified specialist workshop.

IMPORTANT

- Electrical and electronic components must fulfill local and national test requirements as well as ISO 16750 test requirements.
- Refer to the *Rivian Service Manual*, Labor Code 786420010, when installing or removing the 12 V battery.
- Cables must be routed in such a way that there are no kinked points. Do not route cables over sharp edges.
- Cables should be fixed in place to avoid chafing, squeaks, and rattles.
- Consult the *R1S Owner's Guide*.

The upfitter is responsible for functional safety of the body mounting work performed by the upfitter as well as for the observance of the applicable standard and regulations. Furthermore, the upfitter must guarantee compliance with the international standard ISO 26262 concerning functional safety, if applicable.

Please also refer to 49 CFR 567.5 in the US for requirements for manufacturers of vehicles manufactured in two or more stages.

Rivian has no control over the modification or installation process of the electrical content of auxiliary systems and therefore can take no responsibility for such installations. Contact aftersalessupport@rivian.com for further information.

Do not cut, splice, or wire into CAN buses. Similarly, do not cut, splice, or wire into the low-voltage harness that carries safety critical harness signals, such that those for the satellite crash sensors or the control modules. Do not remove or cut these looms as well, as they consist of an outer-reinforcement mesh. The following must not be modified or extended:

- Cables/wire harnesses to the control modules
- Cables/wire harnesses to the airbag, the seat belt retractors, anchors, or buckles

WARNING

It is recommended to follow the guidelines in the electrical sections of the *R1S Upfitting Guide* and the *Rivian Service Manual*. Incorrect design, for example, overloaded ground paths or insufficient mechanical protection of third-party wiring, could lead to serious system or vehicle failure.

Electromagnetic Compatibility

Electromagnetic compatibility describes an electrical system's ability to act neutrally near other systems when operating at full function. The system in question does not interfere with any of the active systems in the vicinity, nor does it suffer any interference related to electromagnetic disturbance.

Electrical interference can occur in vehicle on-board electrical systems because of the various consumers.

Rivian tests all factory-installed electrical and electronic components for their electromagnetic compatibility in the vehicle.

WARNING

If subsequent modifications are made, this may cause a reduction in comfort in some cases (for example, radio noise) or possibly more serious hazards.

When retrofitting electrical or electronic systems, these systems must be tested for electromagnetic compatibility, and this must be documented.

All electrical equipment fitted must be tested in accordance with FCC, CE in the European Union, UL in the US, and CSA and ULC in Canada.

The following standards provide information on this:

- CISPR 12
- CISPR 25
- DIN EN 55012
- DIN EN 55025
- ISO 7637
- ISO 10605
- ISO 11451
- ISO 11452
- UN R 10

High-Voltage Battery to Skateboard Grounding Fasteners

Do not use the skateboard grounding fasteners as additional or auxiliary grounding points for the low-voltage system. Any additional component that requires grounding must be bonded to the vehicle chassis to ensure proper electrical grounding and safety. It is crucial to meet FMVSS 305 isolation requirements to prevent electrical hazards and ensure compliance with safety standards.

Always use the vehicle chassis as the grounding point for any additional components to maintain the integrity and safety of the vehicle's electrical system.

12 V Battery

The 12 V battery is mounted to the floor underneath the passenger seat.

IMPORTANT

Only use a Rivian-approved 12 V battery. Using an unapproved battery can cause false warning lights, vehicle degregation, or a loss of power to critical systems.

Disconnect the 12 V Battery Terminals

See the *Rivian Service Manual*, Labor Code 780010017 for instructions.

Before working on the vehicle, always disconnect the 12 V auxiliary battery terminals and wait at least 5 minutes before starting work. If any of the covers are damaged during upfitting or are missing, order a replacement part and fit it. If you add additional batteries, provide protection on terminals to prevent metal-to-metal contact and arcing.

Connect to the 12 V Port

Tap into the circuits from the 12 V port in the luggage compartment of the R1S to add options.

DANGER

To prevent a circuit overload, it is recommended to block off the 12 V port.

12 V Port and Power Characteristics

- The 12 V port provides a continuous 15-20 A when the vehicle is on.
- When the vehicle is off, the 12 V port can be turned on in Camp Mode.
- The 12 V port operates at 13.5 V until the system goes into Low Voltage Maintenance (LVM) for charging, at which point it increases to 14.1 V.

12 V Auxiliary Port Location

The 12 V auxiliary Port (J019) is located in the luggage compartment. See the *Rivian Service Manual*, Labor Code 781026010.

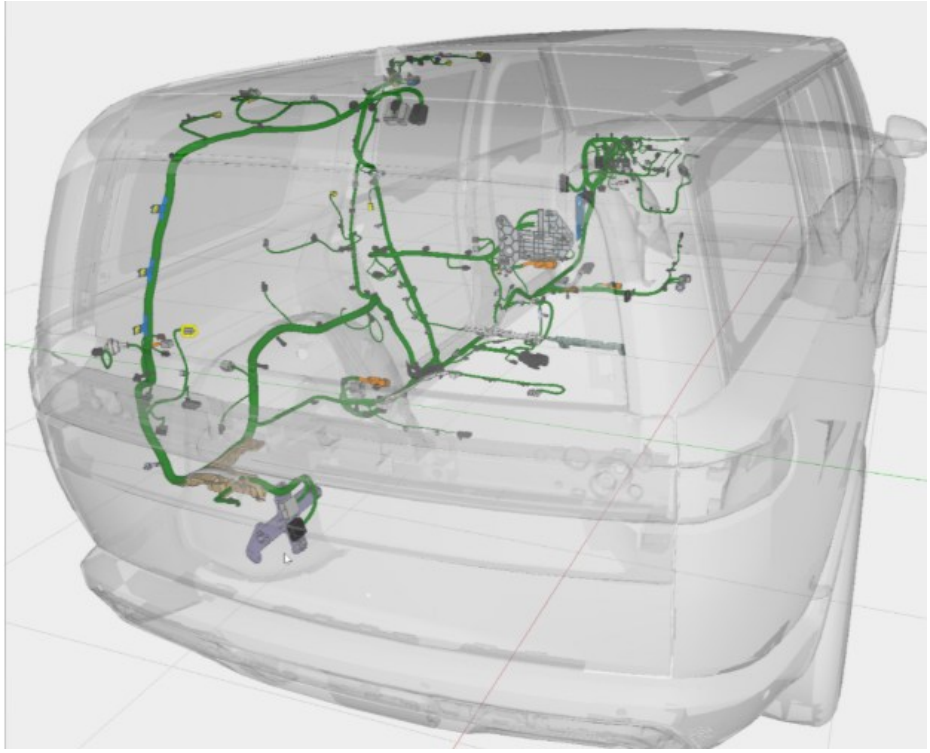

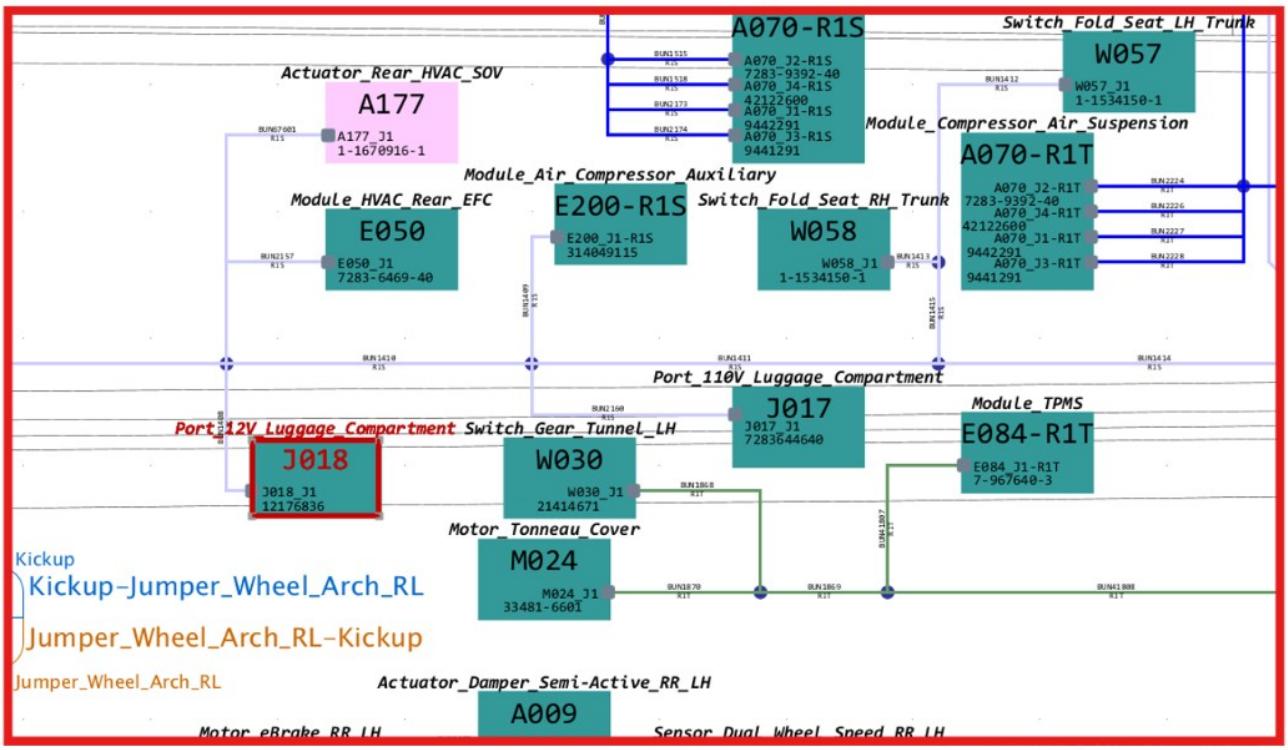

Tap into the 12 V Port

Harness Attributes and Connector Information

Use the parts listed below to tap into the 12 V port at the closest inline connector.

Part	Specification
Harness Mating Connector	Aptiv #13897598
Connector Terminals	#12034047
Recommended Wire Size	14AWG (2.5mm²) PVC or 16AWG (1.5mm²) XLPE min. For extended runs, use a larger gauge wire to prevent excessive voltage drop.

Identify the Correct Port

Locate the 12 V port (J018) in the luggage compartment (*Rivian Service Manual*, Labor Code 781026010).

Obtain the Necessary Connector

Connect to the vehicle's harness using the Aptiv #13897598 mating connector with #12034047 terminals.

Wire your Auxiliary Power Unit (APU) if Needed

If you are using a 12 V Auxiliary Power Unit, connect it to the circuits from the identified 12 V port.

> **NOTE**
> The APU will see operating voltages of 13.5 V, bumping up to 14.1 V during battery charging in LVM.

Consider the Power Requirements

The 12 V port provides continuous 15 A at 13.5 V with a maximum current capacity of 20 A.

Decide on a Wiring Strategy

Choose between wiring back to the charge port to run accessories or creating a cover plate.

Ensure Proper Grounding

Recommended grounding points and connections are located at the Module Zone Controller South (*Rivian Service Manual*, Labor Code 782246010).

Autonomy

Overview

> **NOTE**
> Autonomy is known as Driver Assistance in Gen 1 R1 vehicles.

Autonomy is an Advanced Driver Assistance System (ADAS), which is a collection of features designed to automate certain driving activities and provide useful information about the surrounding environment. These features enhance driver safety, aid in accident avoidance/mitigation, and support autonomy and self-driving capabilities. Rivian's Autonomy incorporates multiple layers of sensors that gather external perception data, internal Controlled Area Network (CAN) communication buses, and Electronic Control Units (ECUs) that process this data. These ECUs use the information to control vehicle functions such as speed and braking and provide visual and audio feedback. For detailed information, refer to 8600 - Driver Assistance, in the Theory of Operations in the *Rivian Service Manual*.

To meet Rivian's standards, all repairs and calibrations involving Autonomy components should be performed by a Rivian Certified Technician at either a Rivian Service Center or Rivian Certified Collision Center. After repair, the Autonomy system needs to be calibrated, however, not all components require calibration. Refer to the appropriate service procedure(s) for detailed and vehicle-specific calibration instructions.

Always refer to the *Rivian Service Manual* for information on removal, installation, fault tracing, and calibration.

> **DANGER**
> - Improper maintenance and calibration of Autonomy components may result in catastrophic failure of the system, which can cause severe injury or death.
> - Modification of Rivian-approved tools or resizing of calibration targets is strictly prohibited. Modifications and resizing can result in improper calibrations that may compromise the safe operation of the vehicle.

> **NOTE**
> Third-party external vehicle films, such as vinyl wrap or Paint Protection Film (PPF), which are not manufactured by XPEL may affect the performance of Autonomy components.

Cameras

Cameras digitize light information for processing by onboard or external computers (ECUs). They are sensitive to lighting, debris, and windshield tinting.

Autonomy Control Modules and Sensors

These components create a digital representation of the vehicle's surroundings using cameras, radars, ultrasonics, and GPS. Signals are processed by two ADAS domain controller ECUs to control vehicle functions and provide feedback.

Radar Sensors

Radars consist of a transmitter, emitter, and ECU. The transmitter emits radio waves that reflect off of objects, and the receiver detects the returned pulse to determine object distance and speed.

Ultrasonic Sensors

Ultrasonic sensors use sound waves for short-range detection, crucial for collision warnings and Park Assist. Sixteen sensors transmit data to the Park Assist Module (PAM) via Park Assist CAN.

Autonomy Sensors and Cameras

Front and Rear

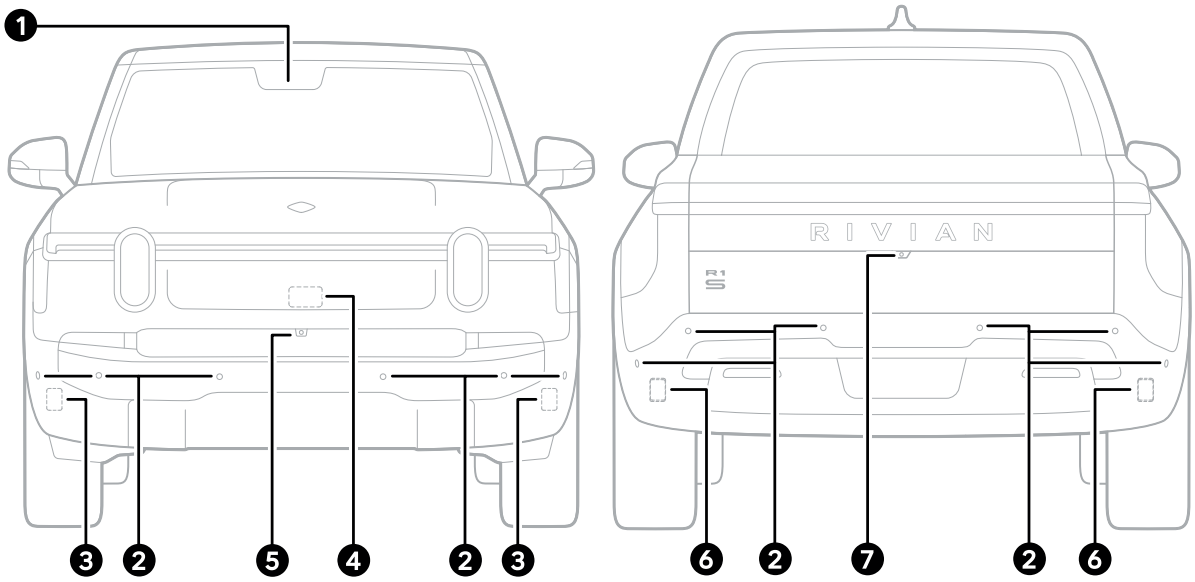

Item	Description
1	Front cameras
2	Ultrasonic sensors
3	Front corner radars
4	Front imaging radar sensor
5	Front surround view camera
6	Rear corner radars
7	Rear surround view camera

The interior camera is located in the rearview mirror facing the driver and is used to detect driver attention to the road.

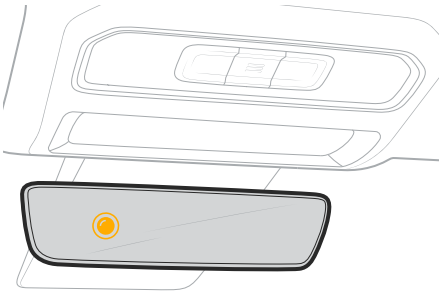

NOTE

If a sensor malfunctions, a red triangle with an exclamation mark appears at the bottom of the driver display.

Driver Side

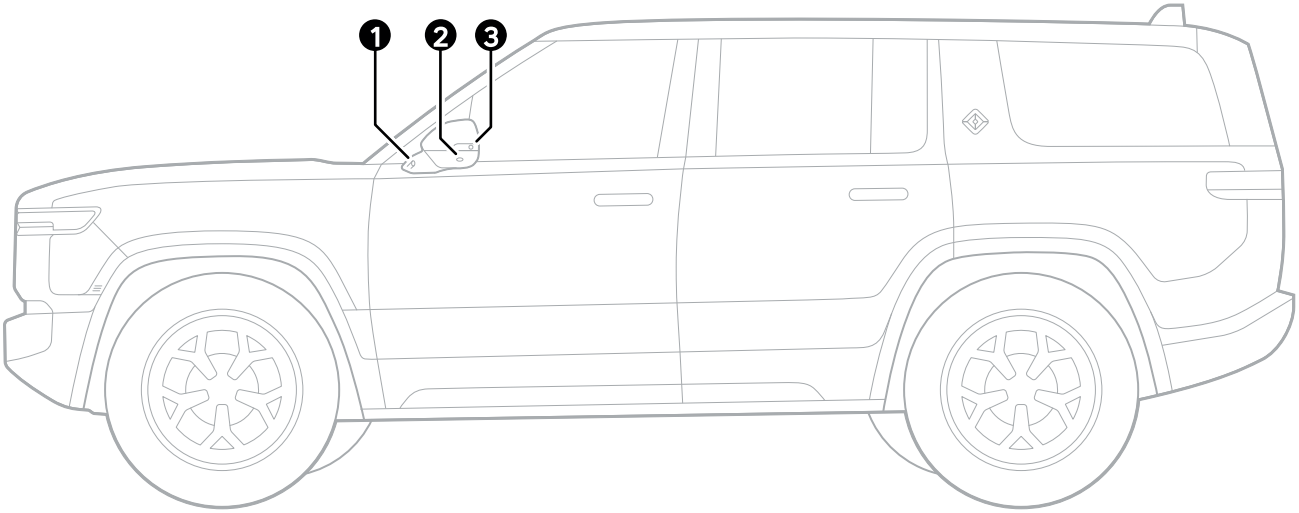

Item	Description
1	Wing camera
2	Surround view camera
3	Lane change camera

IMPORTANT

Keep all camera and sensor areas clean and free of obstructions. Don't apply film, stickers, metal plates, or other equipment that could block the cameras, radars, or sensors. Only use Rivian-supplied paint protective film (PPF).

Automatic Cameras

Different camera views make it easier to park in tight parking spots and provide additional visibility around the vehicle. The vehicle uses ultrasonic sensors to detect distance to nearby objects and automatically activates the front camera at low speeds.

You can adjust Automatic Camera settings on the center display by going to **Settings** ⚙ **> Autonomy > Automatic cameras**.

Toggle the camera to "on" to show a front camera view on the center display under the following conditions:

- When Park Assist Warning detects objects (such as when you pull into a parking spot).
- When shifting from **R** (Reverse) to **D** (Drive).

> **NOTE**
> The front camera view activates when the vehicle speed is 6 mph (10 km/h) or less.

Autonomy View

Autonomy view provides a real-time, 360-degree visualization of your vehicle's surroundings on the driver display. It uses the vehicle's advanced sensors and compute system to detect, classify, and track objects on the road and lanes around your vehicle. It also displays visual warnings and the statuses of various features.

To adjust your driver display view, go to **Settings** ⚙ **> Autonomy > Driver display view**. You can also switch views while driving by pressing the right thumbwheel on your steering wheel.

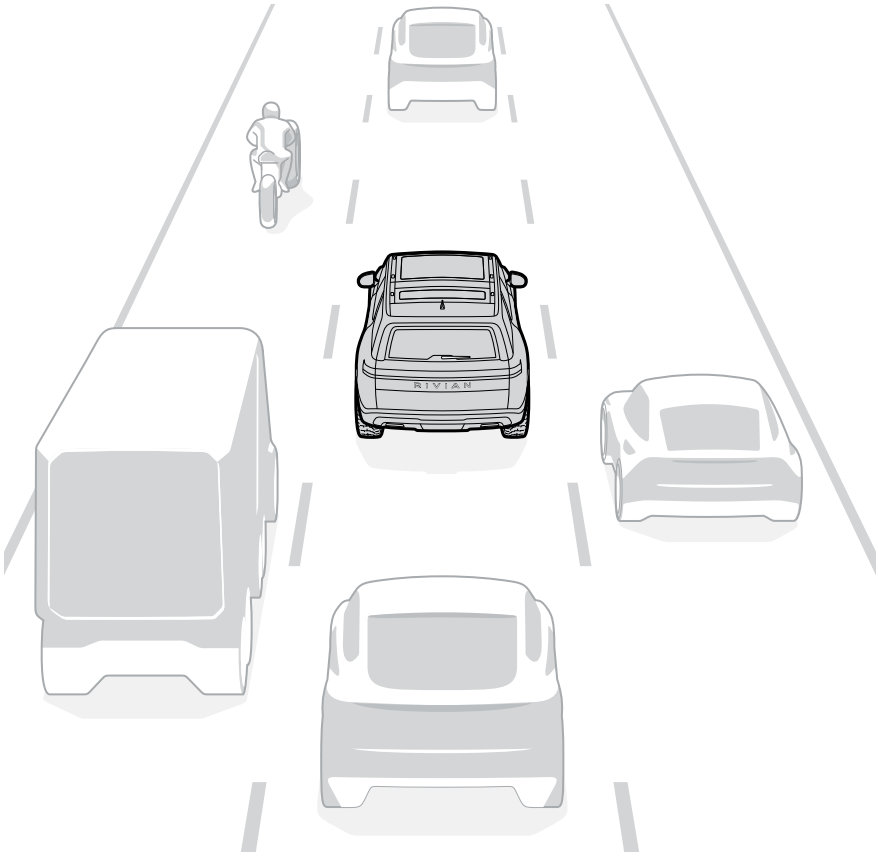

Modifications to Cameras

To ensure the proper functioning of the vehicle's camera systems during upfit modifications, please adhere to the following guidelines:

- Do not block the exterior camera field of view, to maintain clear visibility.
- Avoid placing electronic devices near the cameras, to prevent interference.
- Be careful when drilling through interior panels, to avoid damaging the camera wire harnesses.
- Keep the camera in its current position, to ensure accurate calibration and functionality.
- Do not modify the camera harness, including connectors, to maintain system integrity.
- Avoid placing any light sources within the camera's field of view (FOV) limits, to prevent glare and distortion.
- Do not touch the lens of any camera on the vehicle, to avoid smudges and damage.
- Ensure no objects are placed between the driver and the interior Driver Monitoring System (DMS) camera that could block its FOV.
- Do not place heat sources next to the cameras, to prevent overheating and potential damage.

If a camera is moved during the upfitting process, a calibration must be performed after the upfitting process is complete.

These guidelines are crucial for maintaining the effectiveness of the Autonomy systems during and after upfit modifications.

Camera Calibration Requirements

Front Camera

Camera	Calibration Style	Calibrate When:
Camera, Autonomy, Front	Static or Dynamic	• Camera, Autonomy, Front is replaced or removed and installed • Camera, Autonomy, Front, Bracket is replaced or removed and installed

Surround View System

Camera	Calibration Style	Calibrate When:
Camera, Bumper, Front Camera, Surround, Side Camera, Surround, Rear	Static	• Camera, Bumper, Front is removed and replaced • Camera, Surround, Side is removed and replaced • Camera, Surround, Rear is removed and replaced • Camera and Bracket, Surround, Side, LX and/or Camera and Bracket, Surround, Side, RH is replaced or removed and installed **NOTE** If the upper front fascia or front grille is replaced or removed and installed, check for image clarity on the center information display to determine if calibration is necessary.

Modifications to Autonomy Control Modules and Sensors

To ensure the proper functioning of the Autonomy Control Modules and Sensors during vehicle upfit modifications, observe the following guidelines:

- Do not modify the Autonomy Control Modules and Sensors, including any associated wiring or connectors.
- Ensure that all sensors, including cameras, radars, and ultrasonics, remain in their original positions to maintain accurate calibration and functionality.
- Avoid placing any electronic devices or other objects near the sensors that could cause interference or block their field of view.
- Do not alter the mounting points or brackets of the sensors, to ensure they remain securely in place.

These guidelines are crucial for maintaining the effectiveness and reliability of the Autonomy systems during and after upfit modifications.

Modifications to Radar Sensors

Unauthorized fascia replacements or repainting can interfere with radar function or calibration. Nothing should be placed in front of the center of the fascia or on the corners of the front or rear fascias. This avoids blocking the five radar sensors on the vehicle. This guidance includes, but is not limited to, grille guards, decals, and rear bumper guards.

If the front center radar is uninstalled or reinstalled, a calibration must be performed after reinstallation. For corner radars, calibration occurs while driving.

Radar Calibration Requirements

Radar	Calibration Style	Calibrate When:
Sensor, Radar, Front, Center	Static or Dynamic	• Sensor, Radar, Front, Center is replaced or removed and installed • For front upper fascia removal and install, no calibration is necessary if you confirm radar angle is the same before and after the work is performed

IMPORTANT

All new radar components must be variant coded when installed. Variant coding is not needed if the radar is removed and re-installed. Refer to the *Rivian Service Manual*, Labor Code 8654.

Modifications to Ultrasonic Sensors

Sixteen sensors are arranged around the vehicle, transmitting signals to the Park Assist Module (PAM) behind the center display. They are powered by a connection to the harness from a Power Distribution Unit (PDU) and transmit data through Park Assist CAN. For detailed operational information, please refer to the *Rivian Service Manual*, Theory of Operations, Driver Assistance, Labor Code 8600.

Ultrasonic sensors can be removed and reinstalled as needed without calibration, but sensors should not be swapped between positions or permanently moved.

Occupant Protection Systems

Overview

Occupant protection systems on the Rivian R1S include the following:

- Seatbelts
- Crash Sensors
- Restraints Control Module (RCM)
- Pressure Sensors
- Airbags

Modifications to Occupant Protection Systems

WARNING

Any modifications to the restraint systems or their wiring may lead to these systems malfunctioning. This can result in failure of the restraint system or unintended activation, posing risks of accidents, personal injuries, or fatalities if such systems do not operate correctly. Therefore, modifications to restraint systems or their wiring are strictly prohibited. This prohibition extends to changes to the belt mounting points and their positioning on the B-pillar and C-pillar and any adjustments to genuine Rivian belt system components.

The driver and passenger airbag units, the window airbags, thorax/pelvis side airbags, and the seat belt tensioners contain pyrotechnical elements. The handling, transportation and storage of airbag units are subject to the hazardous materials law regulated by FMCSA under 49 CFR Part 173 in the US, and to the Transportation of Dangerous Goods Act (Transport Canada) in Canada.

The handling, transportation, and storage of airbag units fall under hazardous materials regulations. Only trained personnel following relevant safety guidelines should engage in purchasing, transporting, storing, and fitting or removing potentially explosive substances. All local and federal regulations must be followed.

Modifications in the cockpit area and above the belt line must fulfill the criteria associated with the head impact tests as per FMVSS/CMVSS 201. This applies in particular to the deployment areas of the airbags (wooden trim, additional fittings, mobile phone cradles, bottle holders, etc.). See the illustrations of the airbag deployment areas in the airbags sections for more information.

Painting or treating surfaces is not allowed on specific locations, including instrument panels steering wheel impact absorbers' seams where potential damage could jeopardize optimal performance.

Protective covers should not obstruct thorax/pelvis side airbags functioning or seat mat detection accuracy.

If paint or surface treatment is applied to the instrument panel, the window airbags, the steering wheel impact absorber and the airbag tear seams, chemical reactions can occur on the treated surfaces. This could weaken or damage the materials meaning that the restraint systems no longer operate properly. There is a risk of accident, personal injuries, and death if such systems no longer function correctly. Painting or surface treatment is not permissible on the instrument panel, the window airbags, the steering wheel impact absorber and the airbag tear seams.

Modifications or attachments added on or near the occupant protection systems can lead to malfunction of these systems. Occupant protection systems shall not be modified or obstructed in any way.

Seatbelts

Do not drill in the left or the right retractor assembly.

To prevent seat belt webbing damage, no hardware must cut, punch, or interfere with the seat belt. Avoid sharp brackets near the webbing–all edges must have a minimum radius of 0.02 in (0.5 mm). Avoid parts that may change the belt routing to the occupant.

If drilling near the retractor and pretensioner, the mechanism must be covered to prevent debris from falling into the assembly and causing functional issues.

Do not modify seat belts or seat belt buckles.

Make no modifications to the driver or passenger seats.

Crash Sensors

The side and rear sensors are located in the positions shown below. Do not relocate or reposition any of the side crash sensors. When drilling or grinding in these areas, turn off low-voltage and disconnect the 12 V battery. Modifications or reinforcements in the area of the sensors may affect the deployment of the airbag, seat belt restraints, and high-voltage isolation and result in unwanted or incorrect airbag deployment.

Item	Location
Left Crash Sensor Locations	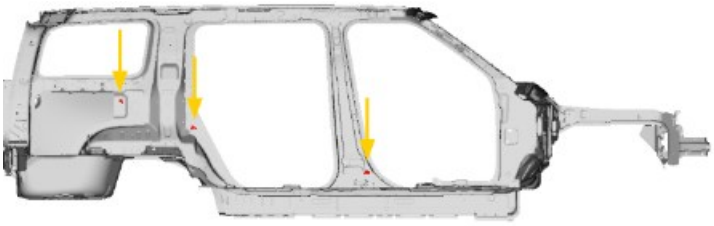
Right Crash Sensor Locations	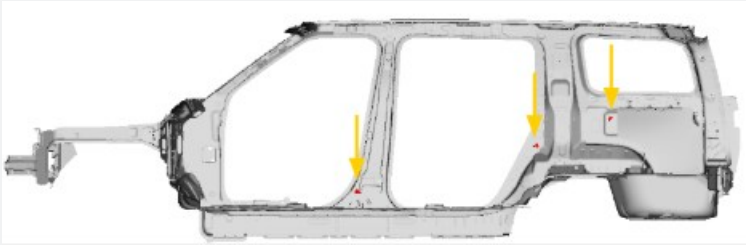

Item	Location
Left B-pillar Crash Sensor	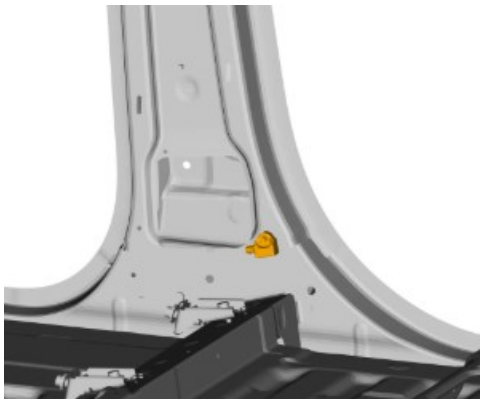
Right B-pillar Crash Sensor	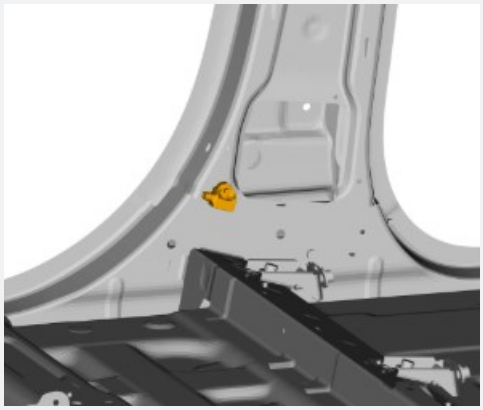
Left C-pillar Crash Sensor	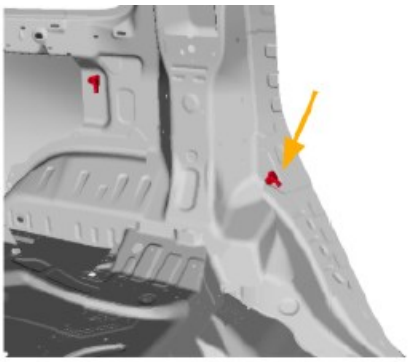

Item	Location
Right C-pillar Crash Sensor	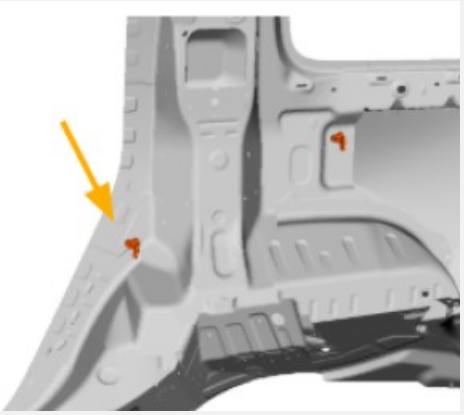
Left D-pillar Crash Sensor	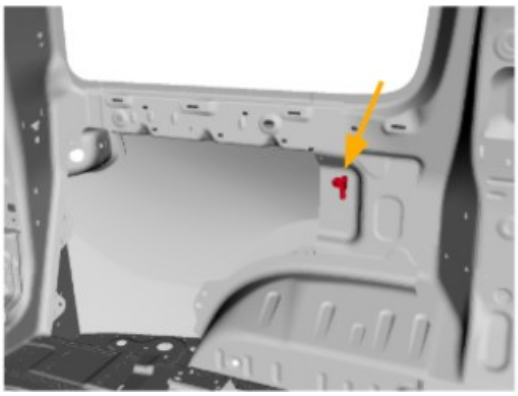
Right D-pillar Crash Sensor	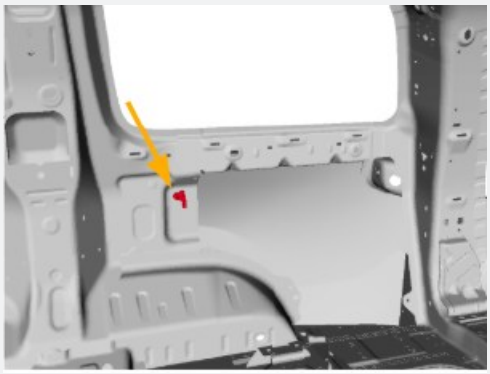

Airbags and Restraints

WARNING

Do not drill into the A-pillar trim, left upper headliner as it will rupture the curtain airbag.

Restraints Control Module (RCM)

The Restraints Control Module (RCM) is located on the cabin floor, underneath the dash and at approximately the center of the vehicle. The RCM is protected by the HVAC trim and the cabin floor.

WARNING

Modifications or reinforcements in the area of the RCM may affect the deployment of the airbag, seat belt restraints, and high-voltage isolation deployment and result in uncontrolled deployments, which can lead to injury or death.

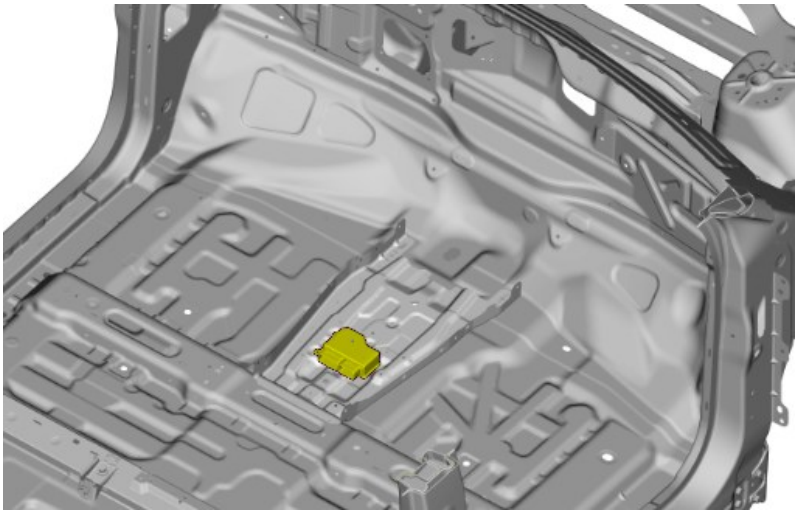

Front Crash Sensors

The front crash sensors are located behind the front fascia (highlighted).

- Modifications or reinforcements in the area of the sensors may affect the deployment of the airbag, seat belt restraints, and high-voltage isolation deployment and result in uncontrolled deployments, which can lead to injury or death.
- Do not drill, cut, weld, or modify the front crossmember (highlighted below) that holds the front crash sensors. Doing so may affect the crash sensor performance.
- Do not relocate or reposition any of the front crash sensors.
- When drilling or grinding in these areas, turn off low-voltage and disconnect the 12 V battery.
- Do not modify or reroute the wiring to the front crash sensors.

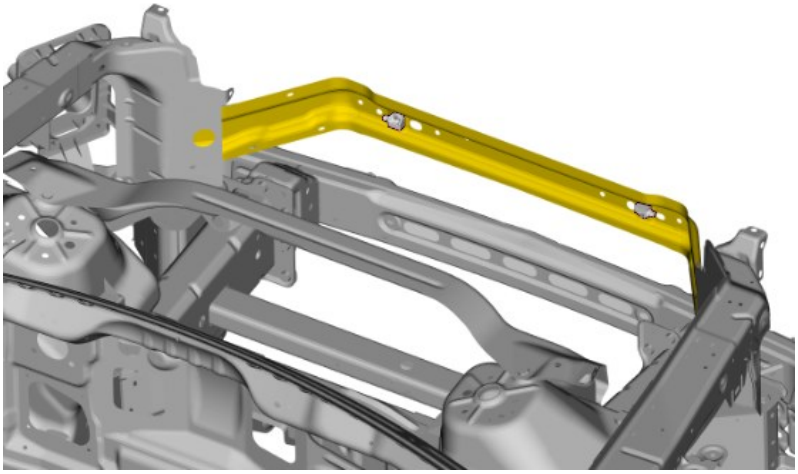

Side Safing Sensor

The side safing sensor is located in the spare tire bed (see illustration).

- Modifications or reinforcements in the area of the sensor may affect the deployment of the airbag, seat belt restraints, and high-voltage isolation deployment and result in uncontrolled deployments, which can lead to injury or death.
- Do not drill, cut, weld, or modify the spare tire bed (shown in gold below) that holds the side safing sensor. Doing so may affect the crash sensor performance.
- Do not relocate or reposition the side safing sensor.
- When drilling or grinding in these areas, low-voltage should be turned off and the 12 V battery should be disconnected.
- Do not modify or reroute the wiring to the side safing sensor.

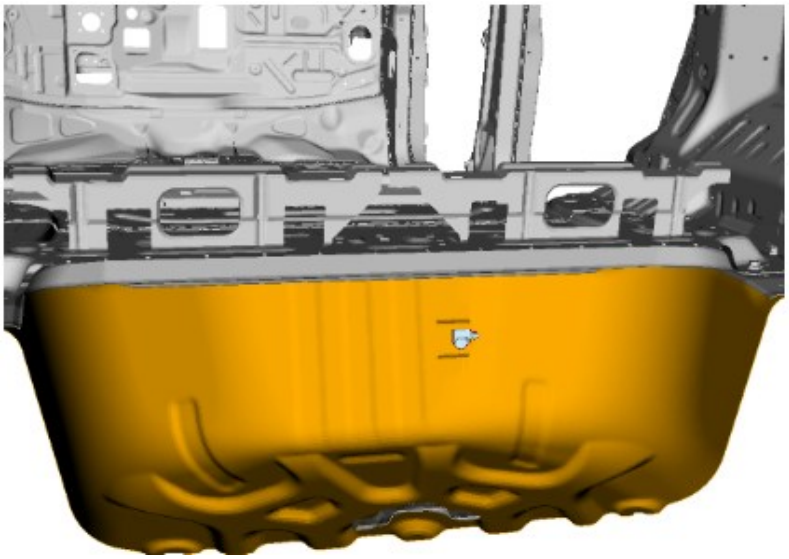

Driver Side Door Pressure Sensor

The driver side door comes equipped with a pressure sensor for the restraints and high-voltage isolation system.

WARNING

Exposure of these components to drilling or grinding operations is not permitted, even when the battery cables are disconnected.

- Modifications or reinforcements around the sensors may affect the deployment of the airbag, seat belt restraints, and high-voltage isolation deployment and result in uncontrolled deployments, which can lead to injury or death.
- Do not relocate or reposition any of the driver door pressure sensors.
- Do not drill, cut, weld, add structure, or modify any of the driver door structure or door trim.
- Do not modify the door seals.

Driver Door Outer View	Driver Door Inner View
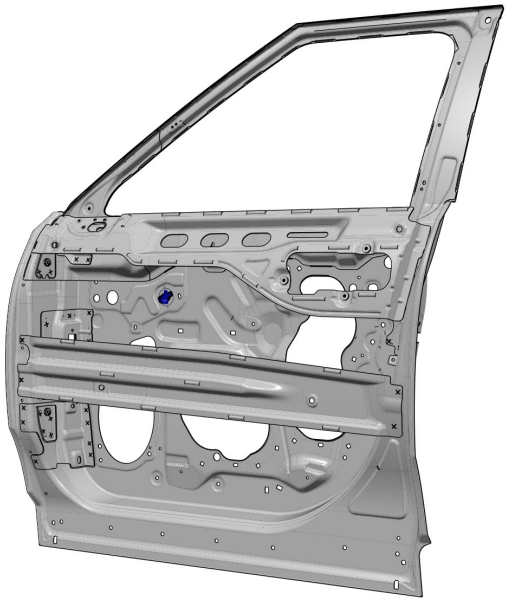	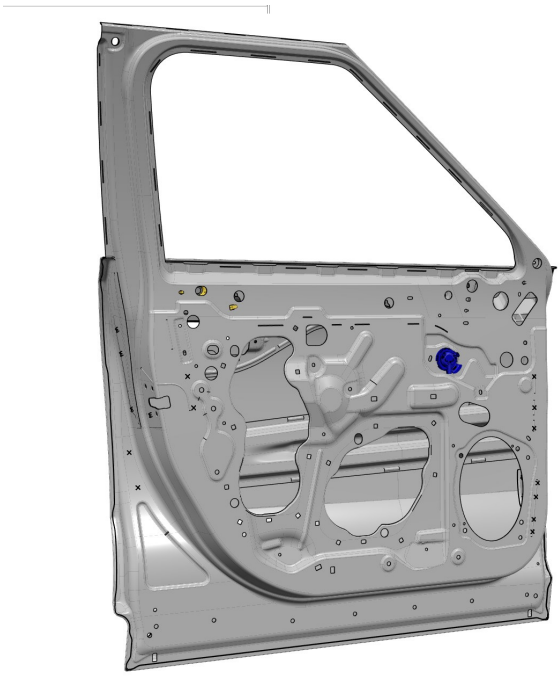

Standard Driver and Passenger Airbags

- Do not place accessories in the deployment zone of the driver or passenger airbags.
- Do not place stickers or decals over the driver or passenger airbag covers, as they may impair the airbag deployment.
- The vehicle comes with a collapsible steering column that works in conjunction with the driver airbag during a frontal collision. Do not modify the steering column, the steering column shroud, or its attachments in any way.

The driver and passenger airbag deployment zones are highlighted below.

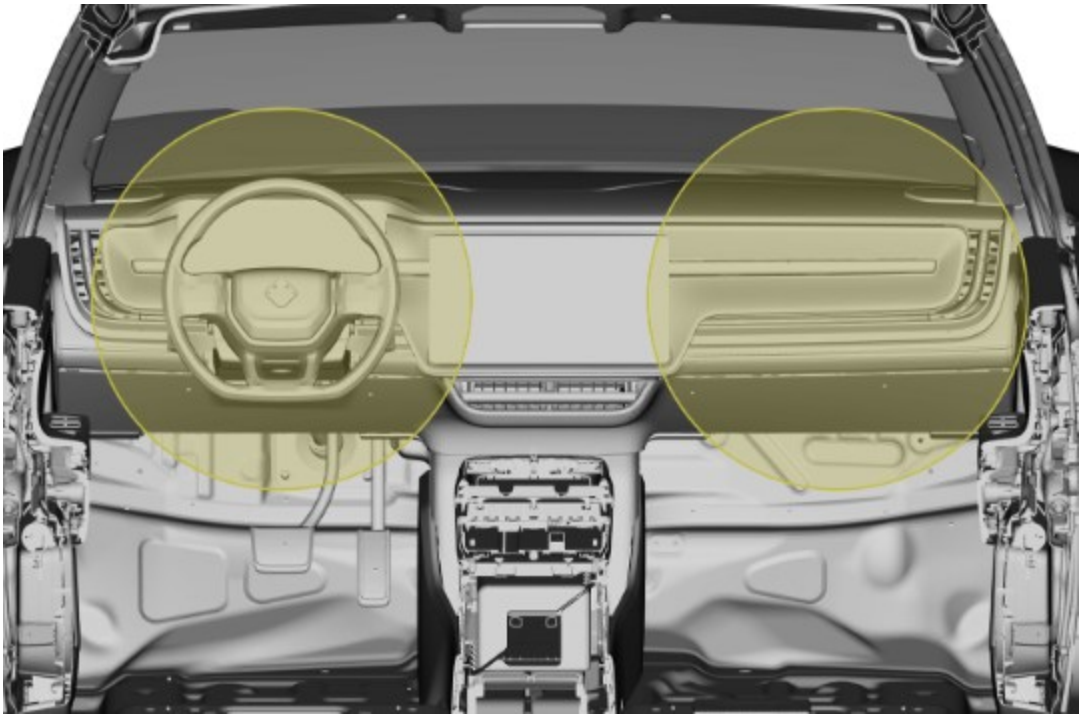

Standard Pelvis/Thorax Side Seat Airbags

- Do not place accessories in the deployment zone of the pelvis/thorax side seat airbags.
- Do not place stickers or decals over the pelvis/thorax side seat airbags covers, as they may impair the airbag deployment.
- The pelvis/thorax side seat airbags work in conjunction with the door, the door trim, and the B-pillar in the event of a collision. Do not drill, cut, weld, add structure, or modify any of the driver or passenger door structure, door trim, or the B-pillar.
- The pelvis/thorax side seat airbags on this vehicle have not been validated for use with swiveling front seats. Swiveling seats are not allowed for the Rivian R1S.
- The upfitter must ensure any seat covers installed are designed to be used with side airbag equipped seats.

Standard Curtain Airbags

- Do not place accessories in the deployment zone of the curtain airbags.
- Do not place stickers or decals over the curtain airbag covers, as they may impair the airbag deployment.
- Do not modify the installation location, position, and attachment of the curtain airbags.
- Do not use anything other than genuine OEM Rivian parts for the upper and/or lower windows of the driver door.
- Do not modify the headliner, sun visor, or A-pillar trim, B-pillar trim, C-pillar, or D-pillar trim on the driver or passenger side of the vehicle. Be careful when removing these items to ensure that the reinstallation of the components does not interfere with the curtain airbag deployment.

This is the driver side curtain and pelvis/thorax side seat airbag deployment zone. The same zones are applicable on the passenger side.

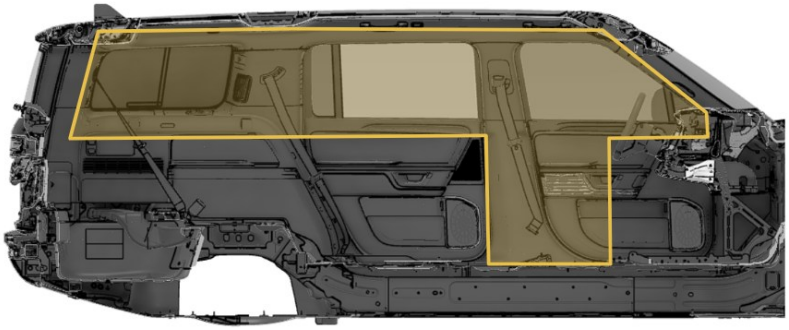

Working with Airbag and Seat Belt Tensioner Units

No modification statement available. Content to follow in a future revision. For immediate support, please reach out to aftersalessupport@rivian.com.

Transporting and Storing Airbag Units and Seat Belt Tensioner Units

No modification statement available—content to follow in a future revision. For immediate support, please reach out to the Rivian Upfit Support Team at aftersalessupport@rivian.com.

Safety Labels and Locations

The labels shown below are for illustrative purposes only and should not be used as a certification reference. They serve as visual aids to indicate location and may not reflect the most current images.

For US vehicle labeling requirements, please visit the National Highway Traffic Safety administration at https://www.nhtsa.gov and the US Environmental Protection Agency at https://www.epa.gov.

For labels specific to other regions or countries, refer to the vehicle labeling regulations for the region in which the upfitted vehicle is intended to be used.

The upfitter may need to place additional labels to be compliant with regulations and standards on upfitted vehicles.

WARNING

Do not remove any labels or move them to a different location. Some label locations are governed by regulations.

NOTE

Label location may vary for different models or variants.

Part Name	Warning/ Regulatory	Country/ Region	Locations Image (reference only)
Vehicle Identification Number Label	Regulatory	US	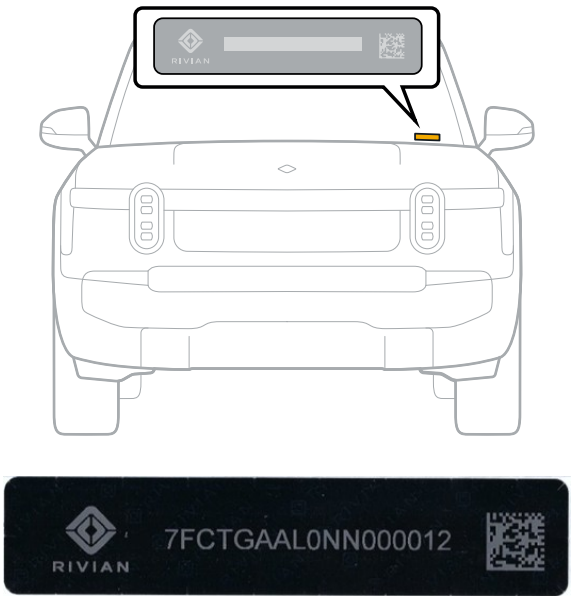

Part Name	Warning/ Regulatory	Country/ Region	Locations Image (reference only)
Certification Label	Regulatory	US	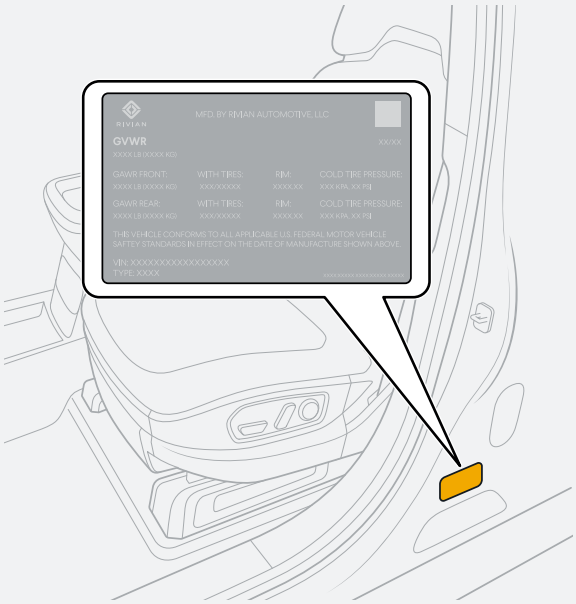 		

Part Name	Warning/ Regulatory	Country/ Region	Locations Image (reference only)
Certification Label	Regulatory	Canada	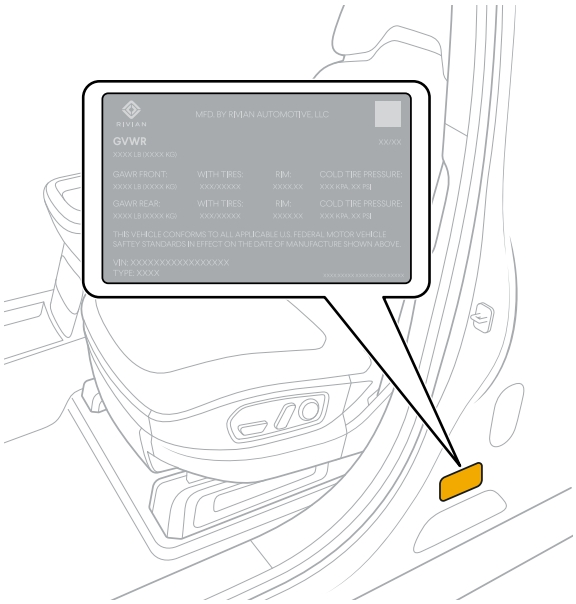

Part Name	Warning/ Regulatory	Country/ Region	Locations Image (reference only)
Emission Label	Regulatory	US Canada	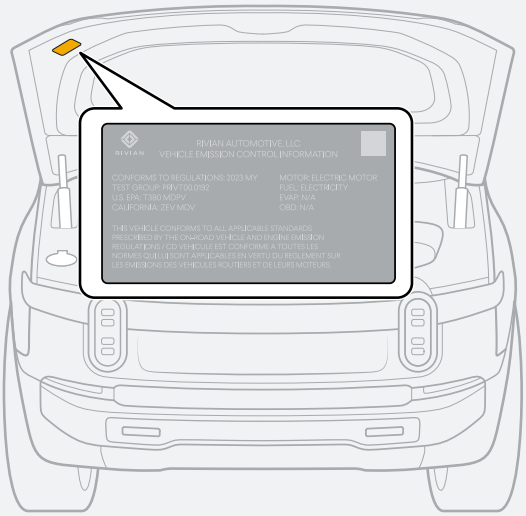

Part Name	Warning/ Regulatory	Country/ Region	Locations Image (reference only)
Tire Placard Label	Regulatory	US	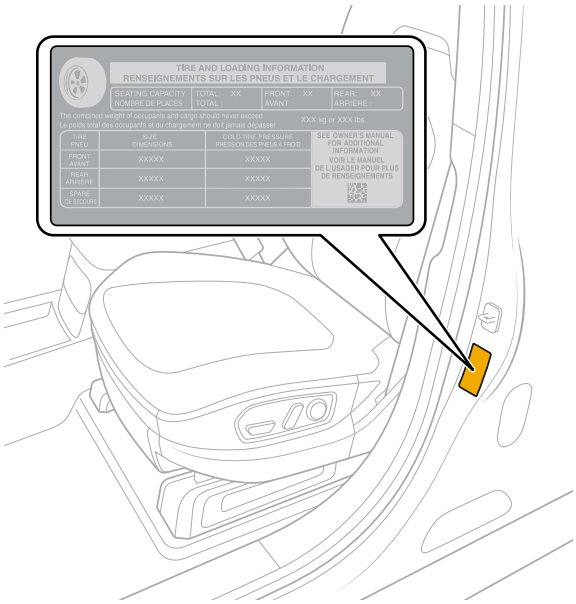 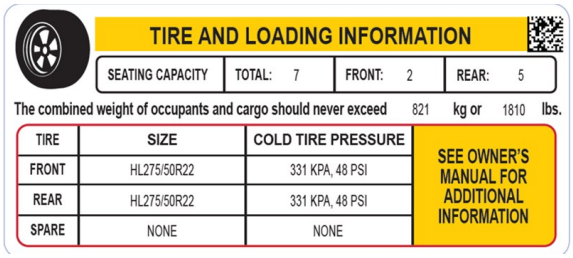

Part Name	Warning/ Regulatory	Country/ Region	Locations Image (reference only)
Reduced Load Carrying Capacity Label	Regulatory	US	The Reduced Load Capacity Label must comply with FMVSS 110 guidelines and be placed within 1 in (25 mm) of the Tire Placard Label. Refer to Weights for further information.
Sun Visor Air Bag Warning Label - Left, show side	Regulatory	US Canada	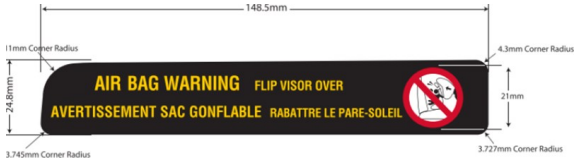
Sun Visor Air Bag Alert Label - Left, stow side	Regulatory	US Canada	
Sun Visor Height Label - Right, show side	Regulatory	US Canada	

Part Name	Warning/ Regulatory	Country/ Region	Locations Image (reference only)
Sun Visor Height Label - Right, stow side	Regulatory	US Canada	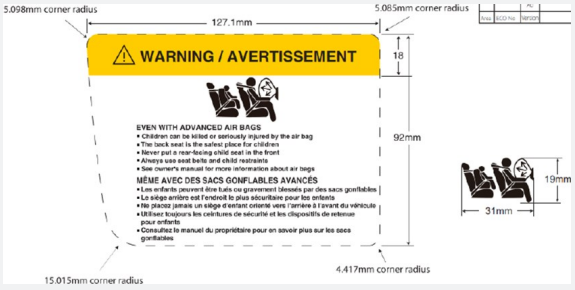
Removable Airbag Warning Label (US/Canada)	Regulatory	US Canada	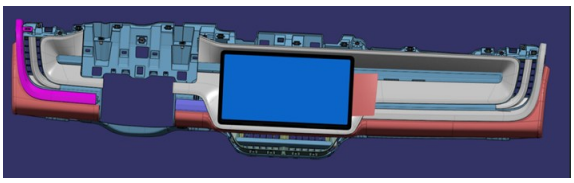 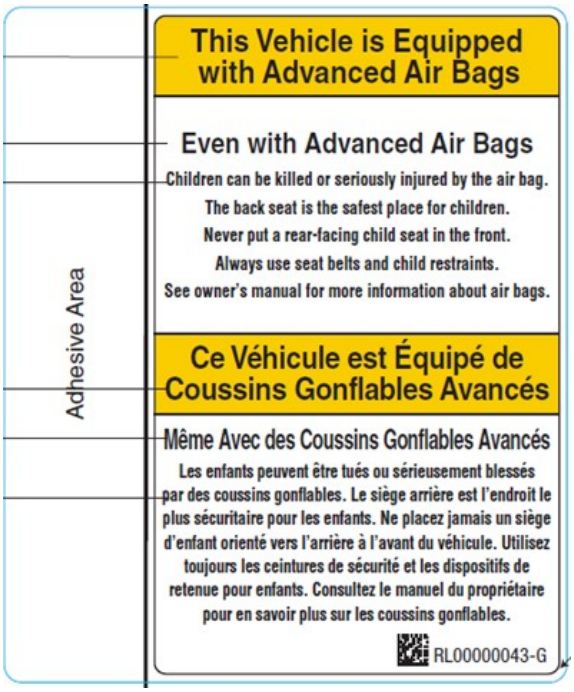

Part Name	Warning/ Regulatory	Country/ Region	Locations Image (reference only)
AC Refrigerant Charge Label	Warning	US Canada	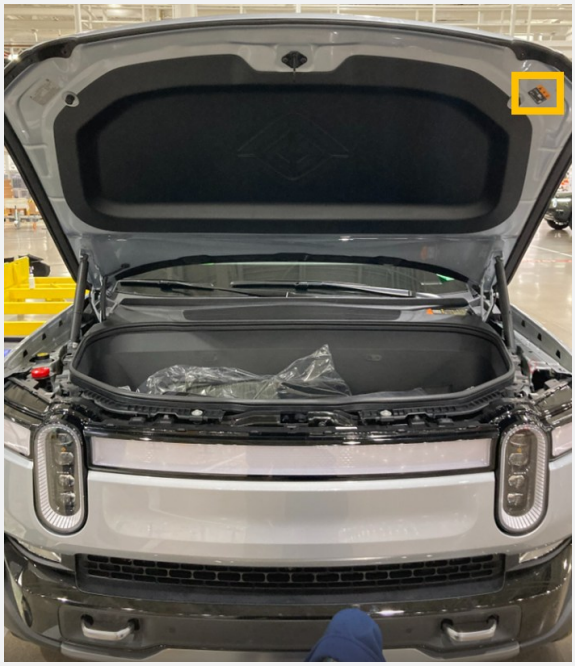 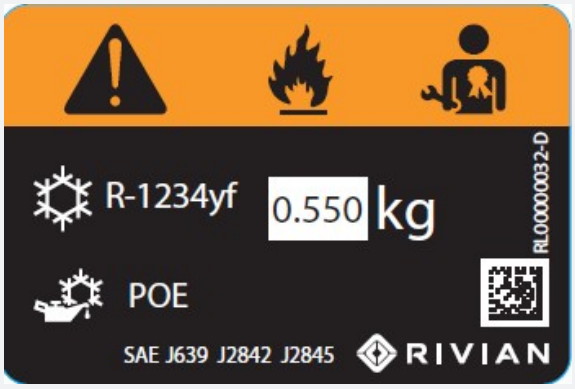

Part Name	Warning/ Regulatory	Country/ Region	Locations Image (reference only)
First Responder Label (R1S)	Warning	US Canada	

Part Name	Warning/ Regulatory	Country/ Region	Locations Image (reference only)

Part Name	Warning/ Regulatory	Country/ Region	Locations Image (reference only)
First Responder Cable Disable Label	Warning	US Canada	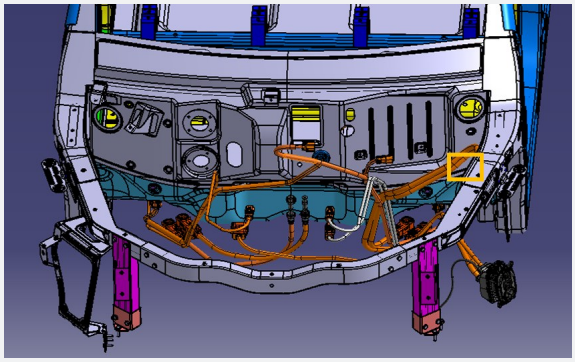

Part Name	Warning/ Regulatory	Country/ Region	Locations Image (reference only)
High-Voltage Warning Label	Regulatory	US Canada	Battery Pack, 450 V 9M C3 Battery Pack, 450 V LFP100 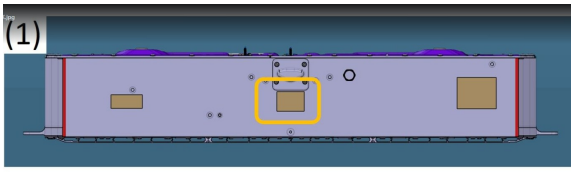 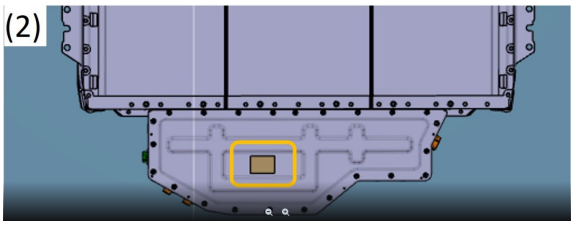 Drive Unit Inverter 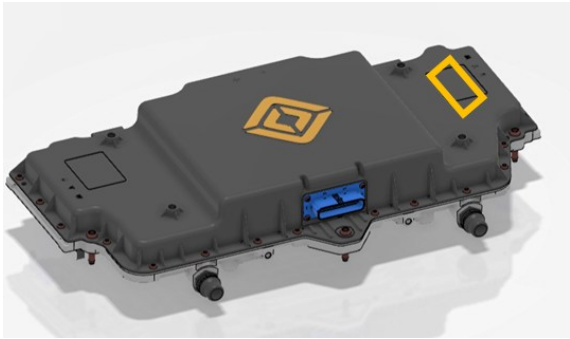

Part Name	Warning/ Regulatory	Country/ Region	Locations Image (reference only)
California Prop 65 Warning Label	Regulatory	US-California	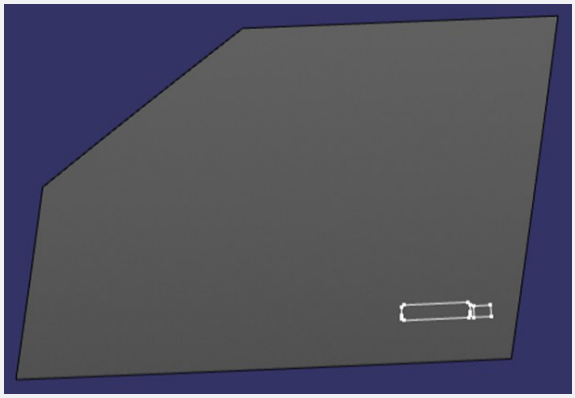 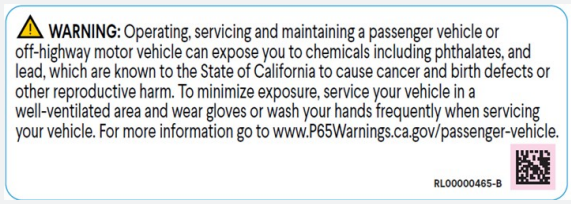 WARNING: Operating, servicing and maintaining a passenger vehicle or off-highway motor vehicle can expose you to chemicals including phthalates, and lead, which are known to the State of California to cause cancer and birth defects or other reproductive harm. To minimize exposure, service your vehicle in a well-ventilated area and wear gloves or wash your hands frequently when servicing your vehicle. For more information go to www.P65Warnings.ca.gov/passenger-vehicle. RL00000465-B

Upfitter Feedback, Queries, and Questions

Rivian's Upfit Support Team can be reached at aftersalessupport@rivian.com