RIVIAN

R1T

Owner's Guide

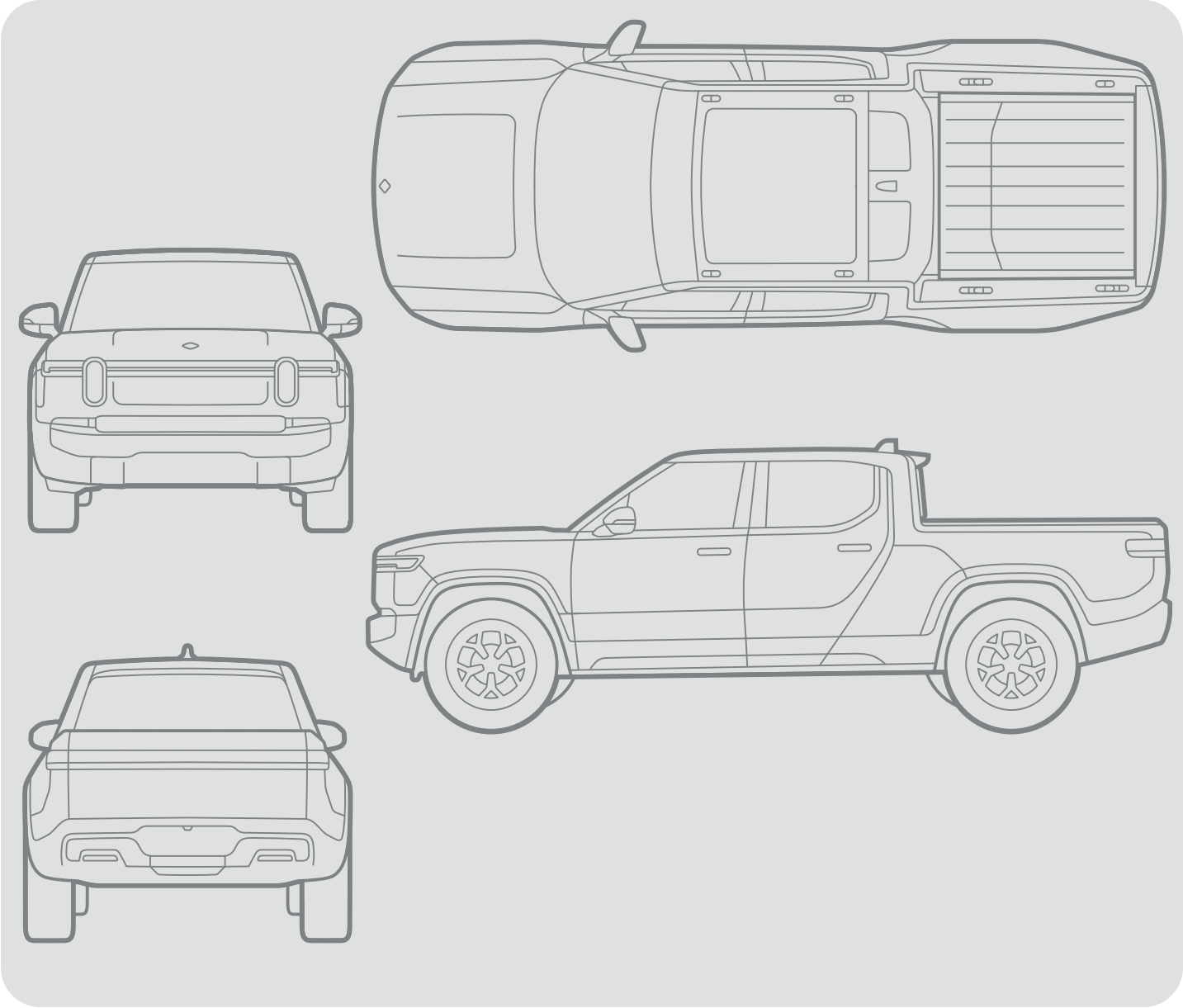

United States
October 2026

Software Version 2026.36
Model Year 2025-2027

RIVIAN

© 2021-2026 Rivian Automotive, LLC. All rights reserved.

All information in this document and all Rivian software is subject to copyright and other intellectual property rights of Rivian Automotive, LLC, its affiliates, or its licensors. This material may not be modified, reproduced, or copied, in whole or in part, without the prior written permission of Rivian Automotive, LLC, its affiliates, or its licensors. Unless indicated otherwise, all trademarks are owned and registered by Rivian Automotive, LLC, its affiliates, or its licensors in the United States and/or other countries. Please visit https://www.rivian.com/legal/brand for Rivian's trademarks and service marks.

Android, YouTube, Google Cast, Google Maps, Pixel, and other marks are trademarks of Google, LLC. All other trademarks are property of their respective owners.

Software embedded or accessed by the vehicle may utilize open source software. Please visit https://www.rivian.com/legal/open-source for more information.

Some features may not be available depending on your vehicle configuration or region.

The images provided in this document are for illustrative purposes only. Depending on the product details and market region, the information in this document may appear slightly different from your product.

Contents

Vehicle Overview **13**
Introduction 13
Symbols Used in This Guide 13
High-Voltage Dangers 14
Exterior Overview 15
Front and Rear Exterior View 15
Truck Bed Exterior View 17
Driver Side Exterior View 18
Front and Rear Lights 19
Side Lights 21
Truck Bed Lights 23
Interior Overview 25
Interior Front View 25
Interior Rear View 26
Power Outlets 27
Power Outlets Overview 27
Accessory Power 30
Updates and Upgrades 31
Vehicle Software Update 31
Key Fob Software Update 33
Upgrades 34
Keys and Access **35**
Rivian Accounts and Keys 35
About Rivian Accounts and Keys 35
Key Types 36
Digital Key 36
Phone Key 39
Key Fob 40
Key Card 43
Lock and Unlock 44
About Locking and Unlocking 44
Passive Entry 45
Tap to Lock or Unlock 46
Press to Unlock at Home 47
NFC Entry with a Digital Key 48
Lock and Unlock on a Display 49

Child Locks ... 50
Manage Lock Sounds ... 51
Vehicle Access ... 52
Doors ... 52
Roomy Entry and Exit ... 55
Kneel Vehicle ... 57
Drive Access and Security ... 59
Multi-Factor Drive ... 59
Profile Authentication ... 60
Theft Protection ... 61
Garages ... 62
Garage Door Opener Brands ... 62
Add a Garage ... 63
One-Touch Open or Close ... 64
Open or Close a Garage Door ... 65
Rename a Garage ... 66
Delete a Garage ... 67
Safety ... 68
Seats ... 68
Adjust the Front Seats ... 68
Seat Climate Control ... 68
Seat Belts ... 69
Head Restraints ... 73
Child Seats ... 76
Getting Started ... 76
Choose a Child Seat ... 77
Install a Child Seat ... 78
Install a Child Seat with LATCH ... 79
Install a Booster Seat ... 82
Remove a Secured Child Seat ... 83
Automatic Locking Retractor (ALR) ... 84
Airbags ... 85
About Airbags ... 85
Airbag Status ... 86
Airbag Locations ... 87
Airbag Functions ... 88
Front Passenger Airbag ... 90
Proper Sitting Position ... 92
Children in Rear Seats ... 94
Deployed Airbags ... 95

Cameras ... 96
Camera Views ... 96
Mirrors ... 98
Side Mirrors ... 98
Rearview Mirror ... 101
Windows ... 102
Open or Close Windows ... 102
Lock or Unlock Passenger Windows ... 103
Sun Visors ... 104
Toll Devices ... 104
Tires and Wheels ... 105
Tire Pressure and Tire Care ... 105
Load Capacity ... 107
Steps for Determining the Correct Load Limit ... 108
Uniform Tire Quality Grading ... 110
Snow Traction Devices ... 111
Tire Markings ... 112
Glossary of Tire Terminology ... 113
Tire Pressure Monitoring System ... 115
Remove the Aerodynamic Wheel Cover ... 117
Climate ... 118
Cabin Climate Control ... 118
About Climate Control ... 118
Center Display Controls ... 120
Rear Cabin Controls ... 124
Rear Display Controls ... 126
Heated Steering Wheel ... 128
Window Defrost ... 129
Seat Climate Control ... 130
About Seat Climates ... 130
Front Seat Climates ... 132
Rear Seat Climates ... 133
Pet Comfort ... 134
About Pet Comfort ... 134
Pet Comfort on the Center Display ... 135
Pet Comfort in Mobile ... 136
Climate Schedule ... 137
About Climate Schedules ... 137
Set Up a Climate Schedule ... 138
Change a Climate Schedule ... 139

Remove a Climate Schedule 139
Climate Hold 140
About Climate Hold 140
Climate Hold on the Center Display 141
Climate Hold in Mobile 142
Roof 143
About the Roof 143
Weather App 144
About the Weather App 144
Phone and Media 145
Phone 145
Bluetooth Pairing 145
Phone App 146
Smartphone Integration 148
Rivian Mobile App 150
Phone Thumb Controls 151
Connectivity 152
Cellular Connectivity 152
Wi-Fi Hotspot 153
Vehicle Wi-Fi 155
Device Charging 158
USB Charge Ports 158
Wireless Charger 159
Audio 164
Sound System 164
Media Sources 168
Video 175
About Video Sources 175
Google Cast 176
YouTube 177
Launch Cam 178
Rivian Assistant 179
Overview and Setup 179
Deactivate Wake Words 181
Settings and Privacy 182
Phone Contact Syncing 184
Google Calendar Syncing 185
Ask Rivian Assistant 186
Driving 187
Basic Vehicle Operations 187

Startup and Sleep 187
Vehicle Data 188
Brakes 189
Gear Selection 190
Exterior Lights 192
Interior Lights 198
Steering Wheel 200
Horn 202
Stalks 203
Wipers 204
Driver Profile Settings 207
Driving Controls 208
Status Indicators 208
Power Gauge 219
Vehicle Hold 220
Emergency Deceleration 221
Electronic Stability Control 222
Display Screens 223
Center Display 223
Driver Display 226
Rear Display 227
Drive Modes 228
About Drive Modes 228
On-Road Drive Modes 230
Off-Road Drive Modes 231
Launch Mode 232
RAD Tuner Mode 233
Drive Mode Settings 236
Gauge View 240
Navigation 241
Overview 241
Charging Stops 242
Trip Preferences 243
Add Stops 244
Send Location from Phone 245
Towing a Trailer 246
Load Capacity 246
Trailer Hitch 247
Trailer Settings 249
Trailer Brakes 251

Manual Cruise Control 252
Off-Road Driving 253
Trip Preparation 253
Tread Lightly! Principles 254
Tips and Techniques 255
Air Down Tires 257
Drive Across Water 259
Negotiate Obstacles 261
Kick Turn 264
Recover the Vehicle 269
Post-Trip Inspection 272
Autonomy 277
Autonomy Introduction 277
About Autonomy 277
Autonomy Sensors and Cameras 279
Autonomy Features 282
Settings and Safety Information 282
Adaptive Cruise Control 289
Highway Assist 292
Universal Hands-Free 296
Lane Change on Command 300
Autonomy Drive Styles 302
Curve Speed Assist 304
Smart Turn Signal 305
Go Chime 306
Lane Safety 307
Settings and Safety Information 307
Lane Departure Warning 310
Lane Keeping Assist 311
Blind Spot Monitoring 312
Collision Mitigation 313
Settings and Safety Information 313
Forward Collision Warning 315
Automatic Emergency Braking 316
Dynamic Brake Support 317
Parking Safety 318
Settings and Safety Information 318
Park Assist Warning 321
Rear Cross-Traffic Warning 323
Light Safety 324

Adaptive High Beams Assist 324
Charging and Range 326
Charging 326
Find a Charger 326
Start a Charge Session 327
Set the Charge Amperage 333
Set the Charge Limit 334
Check Charge Status 335
Check Charge Session Data 336
Stop a Charge Session 337
Set a Charge Schedule 339
Range 341
Range Estimates 341
Energy Monitor 342
Effects on Range 343
Low Battery 345
Battery Life 346
Storage and Security 347
Interior Storage 347
Center Console 347
Storage Drawer 348
Rear Seat Armrest 349
Door Pockets 350
Seat Back Pockets 351
Under-Seat Storage 352
Exterior Storage 353
Protect Your Gear 353
Front Trunk 354
Spare Tire Compartment 357
Tailgate 359
Truck Bed 361
Cargo Storage 362
Gear Tunnel Storage 363
Security 368
About Gear Guard Security 368
Gear Guard Settings 369
Gear Guard Cable 371
Gear Guard Video 372
Gear Guard Alarm 382

Camping and Recreation **384**
Camping Controls 384
About Camping Controls 384
Energy Use 385
Outlets 386
Camp Courtesy 387
Turn Displays Off 388
Flood Lights 389
Vehicle Leveling 390
Show and Tell 392
About Show and Tell 392
Accessories **393**
Air Compressor 393
About the Air Compressor 393
Use the Accessory Kit 394
Use the Air Compressor 396
Inflate Tires and Adventure Gear 397
First Aid Kit 399
About the First Aid Kit 399
Rivian Torch 400
Use the Rivian Torch 400
Torch Settings 401
Charge the Torch 402
Replace the Battery 403
Charging Compartment 404
Powered Tonneau Cover 405
About the Powered Tonneau Cover 405
Operate the Powered Tonneau Cover 406
Extend or Retract with the Button 407
Extend or Retract with the Center Display 408
Reset the Powered Tonneau Cover 409
Clean and Lubricate the Tonneau Cover 410
Operating in Cold Conditions 412
Other Accessories 414
About Other Accessories 414
Service and Maintenance **415**
Exterior Cleaning 415
Car Wash Mode 415
Commercial Car Wash 417
Hand Wash and Wax 418

Exterior Speakers 421
Clean the Road Wheel 422
Clean the Charge Port 424
Interior Cleaning 425
Surfaces 425
Display Screens 426
Floor Mats 427
Cold Weather Care 429
Surfaces 429
Lights 430
Routine Maintenance 431
About Vehicle Maintenance 431
Windshield Washer Fluid 432
Replace Wiper Blades 433
Replace the Key Fob Battery 434
Replace the Cabin Air Filter 436
Refrigerant System 438
Rotate Tires 439
Replace Tires 440
Tire Change 442
About Tire Change 442
Prepare the Vehicle 443
Prepare the Spare Tire 444
Lift the Vehicle - Tire Service Kit 446
Remove and Replace a Wheel 449
Wheel and Tire Swap 452
Lift the Vehicle with a Non-Rivian Jack 454
Flat Tire Repair 459
Seal a Flat Tire 459
Troubleshooting and Help 462
Troubleshooting 462
Restart 462
Jump-Start the 12 V System 464
Manually Open the Hood 468
Manually Release the Charge Plug 470
Calibration Settings 471
Reset the Windows 472
Overheating 472
System Failures 472
Roadside Assistance 473

Transport the Vehicle 473
Help 481
Emergency SOS 481
Rear Door Manual Service Release 482
Legal and Reference 483
Legal 483
Certificates and Conformity 483
FCC Statement 484
Exposure to Radio Frequency Energy 485
Class 1 Laser Product 486
State-Specific Disclaimers 487
Event Data Recorder 488
Data and Privacy 489
Clear Settings 492
Odometer Disclosure 493
Reporting Safety Defects 494
Contact Rivian 495

Vehicle Overview

Introduction

Symbols Used in This Guide

The following are the meanings of symbols used in this guide.

DANGER

Risk of electrocution or electric shock

DANGER

Risk of major injury such as

- fire
- chemical or poison
- crushing
- maiming
- death

WARNING

Risk of minor injury

CAUTION

Risk of

- damage to vehicle or property
- data disruption
- voiding warranty

IMPORTANT

Instructions to successfully complete a task

NOTE

Useful information

High-Voltage Dangers

DANGER

- You could be electrocuted, seriously injured, or die if you attempt to perform your own service or repair on high-voltage systems.
- Rivian vehicles contain high-voltage battery packs, extremely high-voltage cables (400–450 V), electrical outlet cables (120 V), traditional car batteries (12 V), compressed gas, and triggering devices.
- High-voltage components are identified by labels. Don't remove, open, take apart, or modify these components. High-voltage cable or wiring has an orange covering. Don't probe, tamper with, cut, or modify high-voltage cables or wiring. Always assume the vehicle is energized.
- Rivian strongly recommends that you have all service and repair work done at a Rivian-authorized service center, mobile service vehicle, or repair facility.
- Service and repair of high-voltage systems should only be performed by a trained technician with the proper knowledge and tools. It is dangerous to perform your own service or repair work on high-voltage systems. Exposure to high voltage can cause electrocution, severe injury, or death.

Exterior Overview

Front and Rear Exterior View

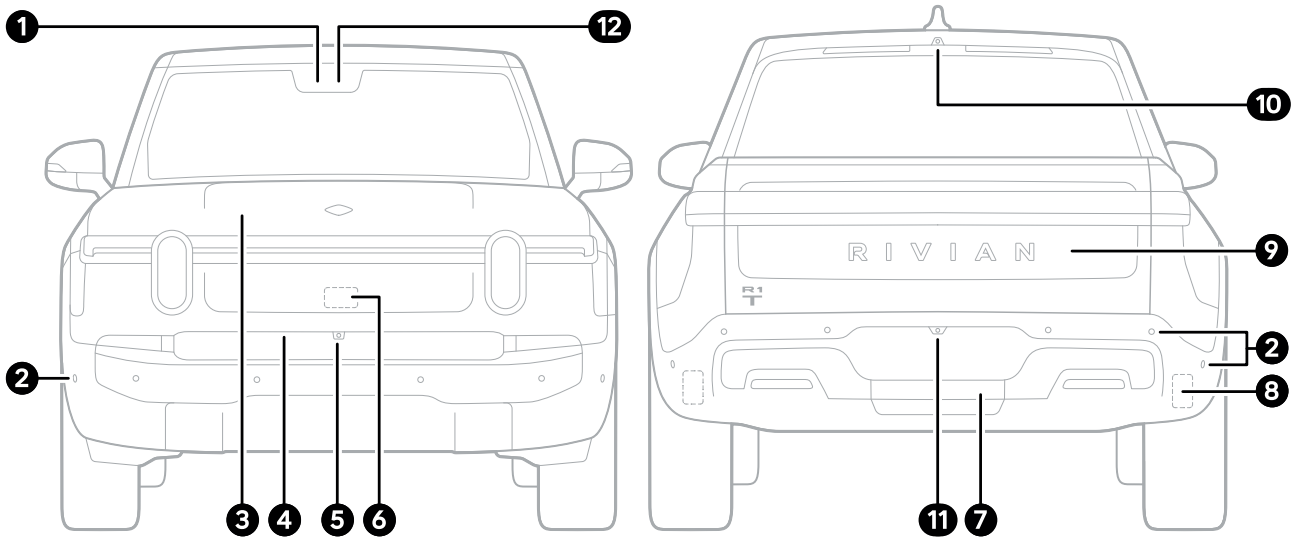

Item	Description
1	Front camera
2	Ultrasonic sensors
3	Front trunk
4	Front trunk button (hidden)
5	Front surround view camera
6	Front radar sensor
7	Towing receiver hitch
8	Corner radars
9	Tailgate
10	Truck bed camera
11	Rear surround view camera
12	Interior camera

NOTE

All vehicles ship with license plate brackets installed on the rear, and installed on the front by request. If your vehicle does not have a front license plate bracket installed, and you would like one, or if it is required by law in your state, please contact Rivian.

CAUTION

Installation of a front license plate bracket requires the use of special tools and fasteners. We do not recommend installing the bracket yourself as improper installation can cause damage to the vehicle.

Truck Bed Exterior View

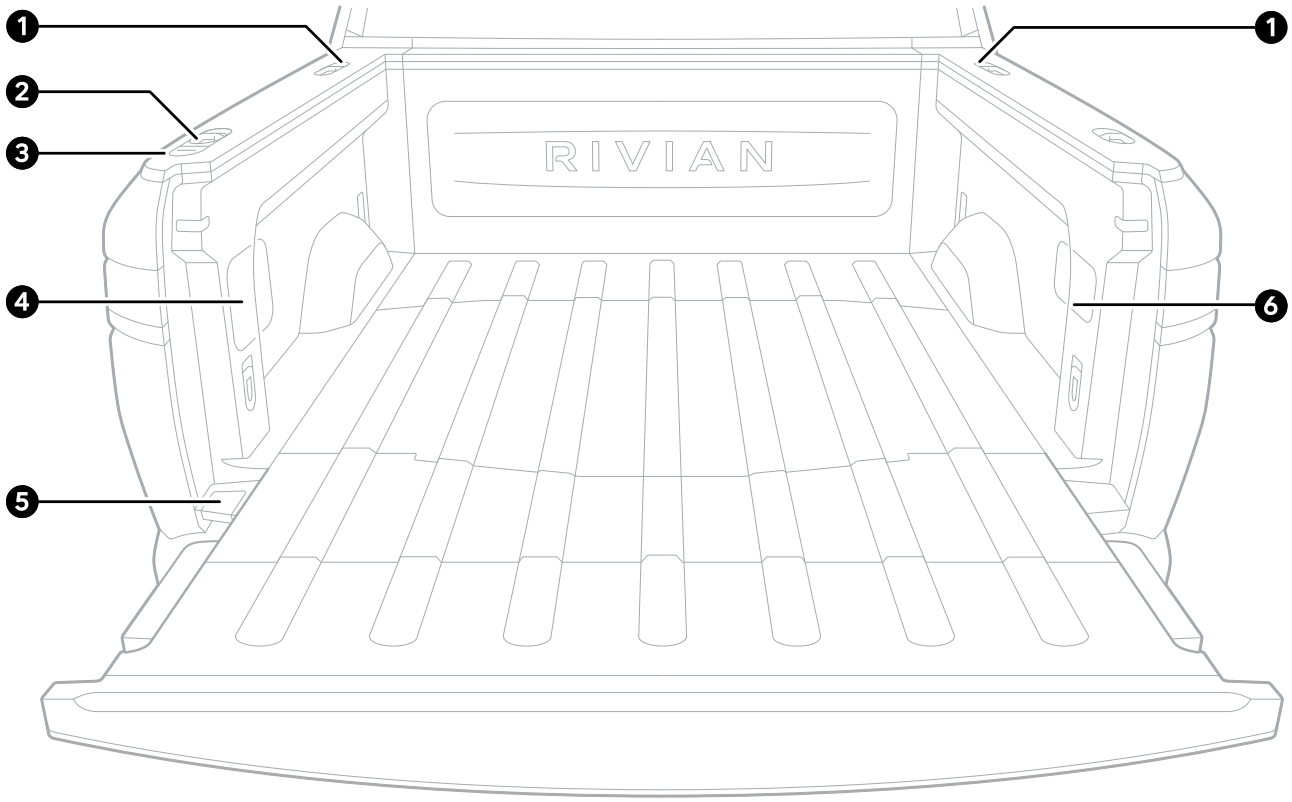

Item	Description
1	Gear Tunnel release buttons
2	Tonneau cover button (if equipped)
3	Tailgate release button
4	Air compressor and Gear Guard cable latches (if equipped)
5	Spare tire compartment lever
6	Power outlets

Driver Side Exterior View

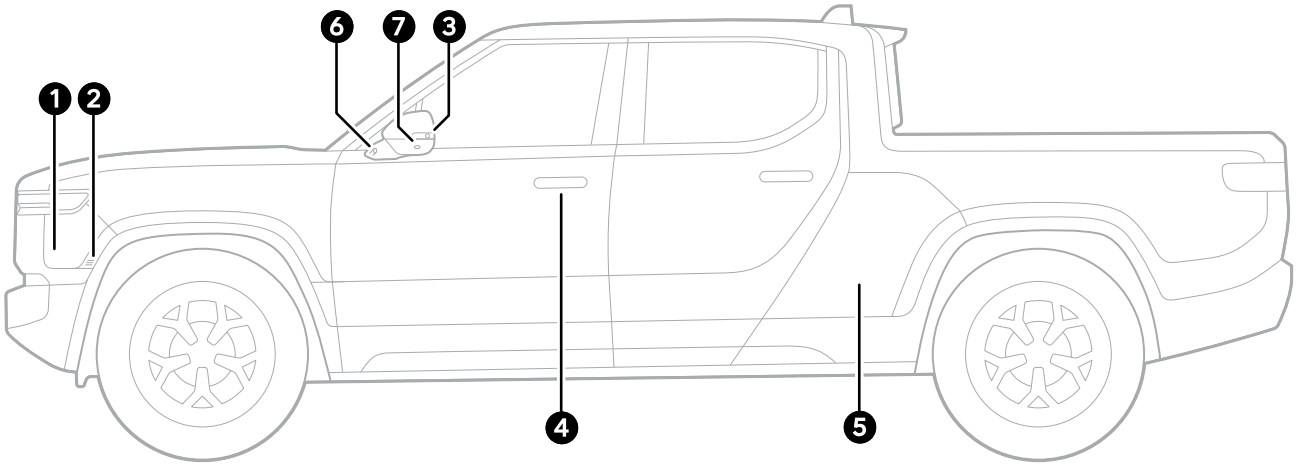

Item	Description
1	Charge port door
2	Charge port door sensor
3	Lane change camera
4	Door handle / key card reader
5	Gear Tunnel
6	Wing camera
7	Surround view camera

Front and Rear Lights

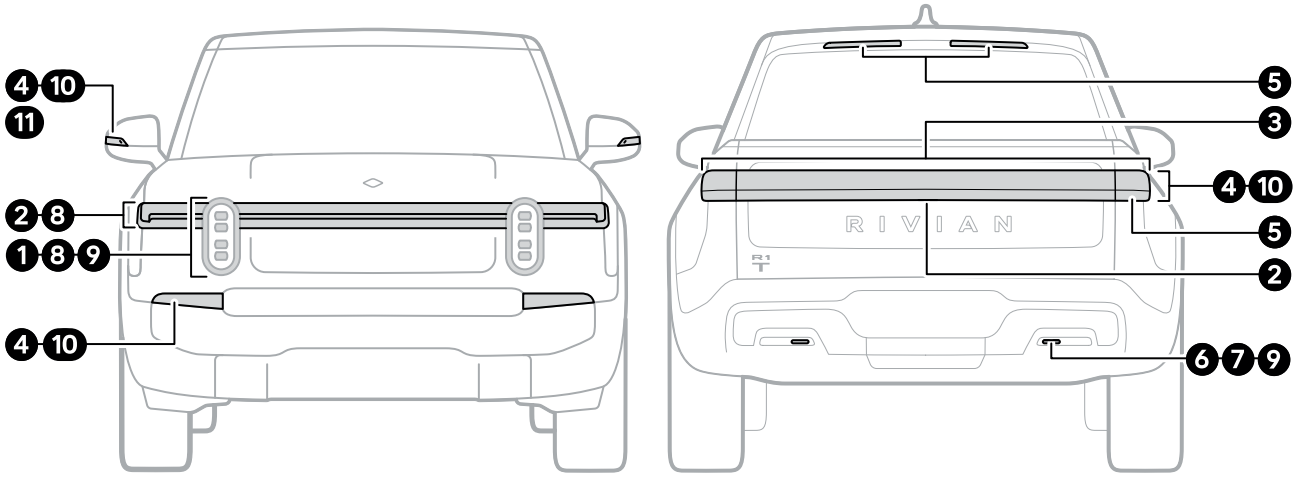

Item	Name	Description
1	Headlights	Lights at the front of vehicle cast a wide beam so you can see the road, objects, and pedestrians at night.
2	Center light bars	The light bars at the front and rear of the vehicle indicate the charge status. When the vehicle is charging, the light bars pulse green one segment at a time. The segments that stay green indicate the charging level. When the vehicle is at full charge, the light bars stay green. When the vehicle is locked, the light bars turn off.
3	Taillights	Red lights at the rear of the vehicle help ensure other drivers can see the vehicle at night.
4	Turn signals	Amber front turn signals and red rear turn signals alert other drivers that you plan to turn or change lanes.
5	Brake lights	Red lights at the rear of the vehicle and red light strips above the rear window alert other drivers when the vehicle slows or stops.
6	Fog lights	Rear fog lights help ensure other drivers can see the vehicle in foggy conditions.
7	Reverse lights	White lights at the rear of the vehicle alert other drivers that the vehicle is in Reverse and may back up.

Item	Name	Description
8	Daytime running lights or parking lights	Lights at the front and sides of the vehicle make it more visible to other drivers while you drive or park it. Daytime running lights are brighter than parking lights.
9	Guide lights	Lights at the front and rear of the vehicle help you and passengers see the surroundings at night.
10	Hazard lights	Amber front and red rear turn signals flash to alert other drivers of a hazard or emergency. In the event of an emergency or malfunction, press the **Hazard Lights** button on the overhead console to turn on the hazard lights and alert surrounding vehicles.
11	Flood lights	Lights behind the side mirrors allow you to easily view the area in front of your vehicle when it's dark outside. Choose **Camping** from the menu, or choose **Vehicle** from the status bar on the center display. Then choose a **Flood Light**, or , to turn a flood light on or off.

Side Lights

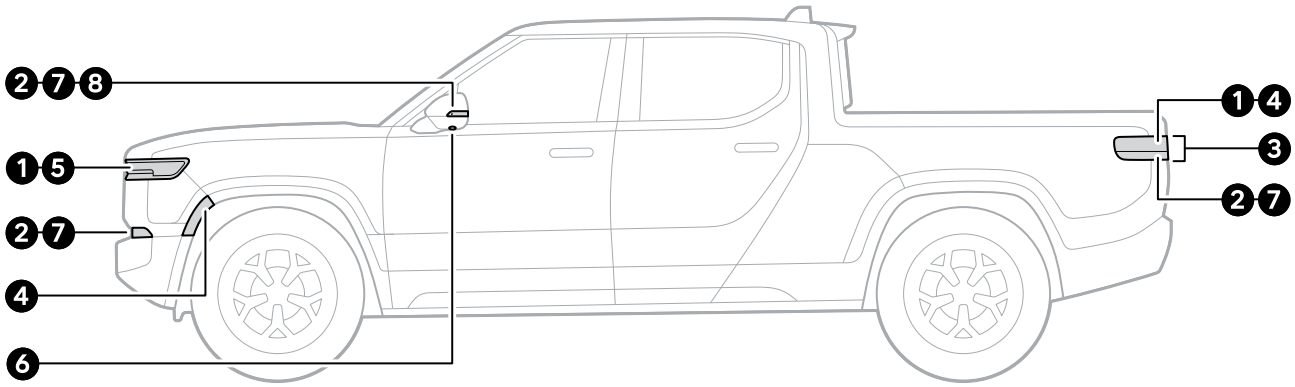

Item	Name	Description
1	Center light bars	The light bars at the front and rear of the vehicle indicate the charge status. When the vehicle is charging, the light bars pulse green one segment at a time. The segments that stay green indicate the charging level. When the vehicle is at full charge, the light bars stay green. When the vehicle is locked, the light bars turn off.
2	Turn signals	Amber front turn signals and red rear turn signals alert other drivers that you plan to turn or change lanes.
3	Brake lights	Red lights at the rear of the vehicle and red light strips above the rear window alert other drivers when the vehicle slows or stops.
4	Front and rear side markers	Lights and reflective markers make the vehicle more visible to other drivers during the day and night.
5	Daytime running lights or parking lights	Lights at the front and sides of the vehicle make it more visible to other drivers while you drive or park it. Daytime running lights are brighter than parking lights.

Item	Name	Description
6	Entry lights	Side mirrors project the Rivian Compass logo to light the ground when you unlock the vehicle. Note the following: • If enabled, the Entry Lights setting turns the entry lights on when you unlock the vehicle. • The lighting sequence setting turns the entry lights on when you unlock your vehicle from close proximity. • If you enable passive entry, the entry lights turn on when you approach the vehicle.
7	Hazard lights	Amber front and red rear turn signals flash to alert other drivers of a hazard or emergency. In the event of an emergency or malfunction, press the **Hazard Lights** button on the overhead console to turn on the hazard lights and alert surrounding vehicles.
8	Flood lights	Lights behind the side mirrors allow you to easily view the area in front of your vehicle when it's dark outside. Choose **Camping** from the menu, or choose **Vehicle** from the status bar on the center display. Then choose a **Flood Light**, or , to turn a flood light on or off.

Truck Bed Lights

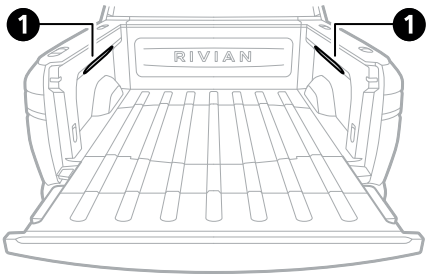

Item	Name	Description
1	Truck bed lights	White truck bed lights in each sidewall illuminate gear and cargo. Turn on the truck bed lights through one of the following: • **Automatic Options:** Open the tailgate, or open or close the powered tonneau cover, if equipped. • **Manual Options:** Choose **Vehicle** from the status bar on the center display, or press the tailgate button on the exterior bed rail while the tailgate is open and unlocked. The truck bed lights turn off under the following conditions: • The tailgate closes. • If equipped, the power tonneau cover closes while the tailgate is closed. • Press the tailgate button on the exterior bed rail while the tailgate is open. • Choose **Vehicle** from the status bar on the center display. • Shift the vehicle from **Park** to **Reverse**, **Neutral**, or **Drive**. If the truck bed lights were automatically turned on, they also turn off under the following conditions: • The timer expires after 2 minutes. • The vehicle becomes locked. If the truck bed lights were manually turned on, they also turn off under the following conditions: • The timer expires after 10 minutes. • Lock the vehicle from the Rivian mobile app. • If you have a key fob, double press the lock button.

Item	Name	Description
		NOTES • After the truck bed lights turn off, you have 30 seconds to turn them on again while the vehicle is locked: press the tailgate button on the exterior bed rail while the tailgate is open. • The truck bed lights won't automatically turn on if you chose Stay off in the Camping app.

Interior Overview

Interior Front View

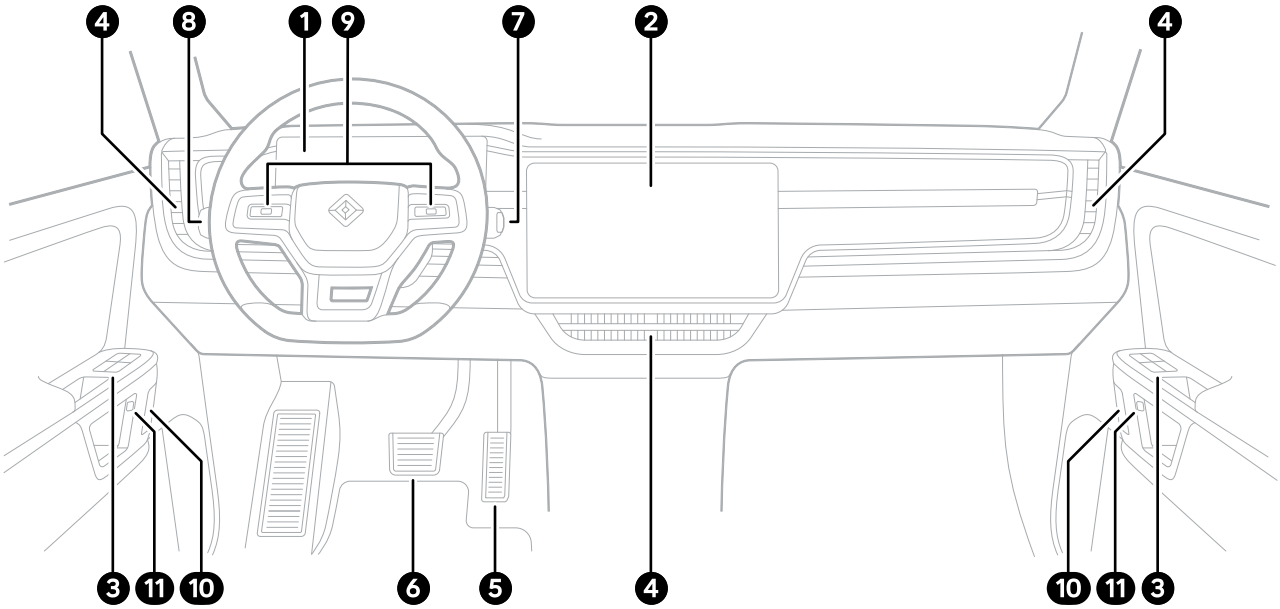

Item	Description
1	Driver display
2	Center display
3	Window controls
4	Vents
5	Accelerator pedal
6	Brake pedal
7	Drive stalk
8	Lights stalk
9	Thumb controls
10	Manual door handles
11	E-latches

Interior Rear View

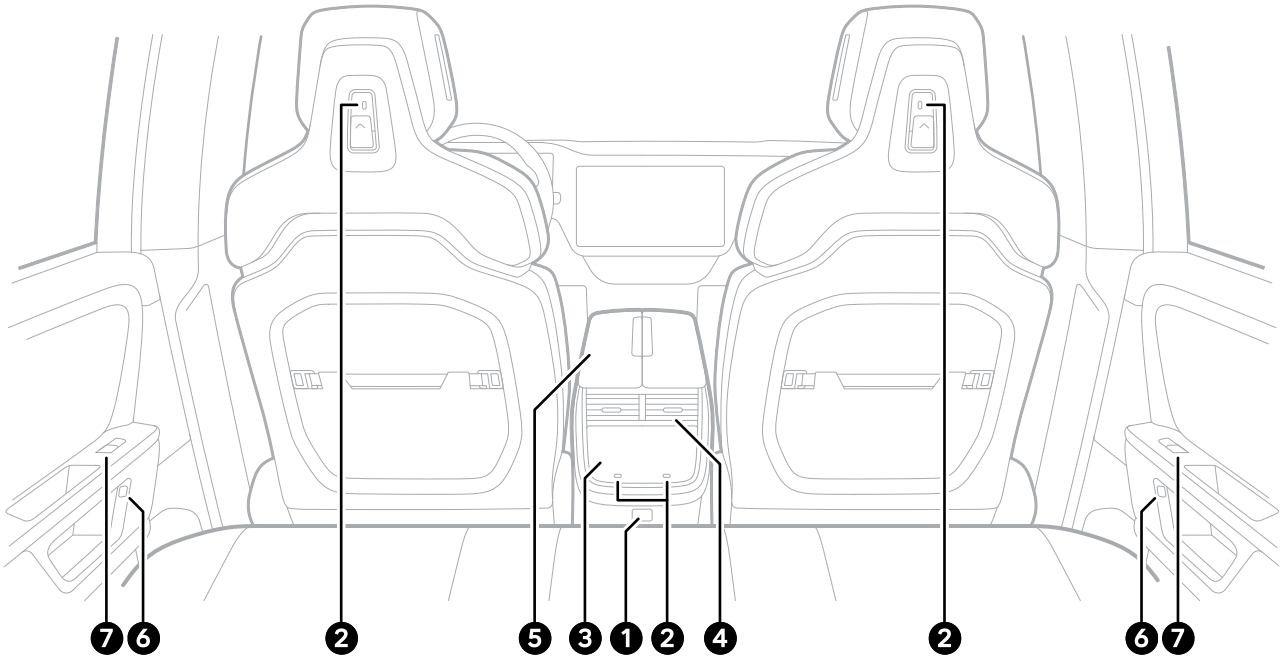

Item	Description
1	Power outlet
2	USB-C outlets
3	Rear display
4	Rear vents
5	Center console
6	E-latches
7	Window controls

Power Outlets

Power Outlets Overview

The following power outlets are available in the vehicle:

- 12 V
- 120 V
- USB-C
- Wireless Charger

NOTES

- Use the USB-C outlets within the storage bin of the center console to charge and store data, such as security footage from the Gear Guard. These USB-C ports can support up to 60 W from a single port, with a total maximum capacity of 67.5 W for two ports.
- Use the USB-C outlets at the back of the head restraints and below the rear display screen for charging only. They are best suited for smaller electronic devices such as a phone or tablet. These USB-C ports can charge a max of 15 W from a single port, with a total maximum capacity of 30 W.
- Depending on your vehicle, not all outlets may be available.

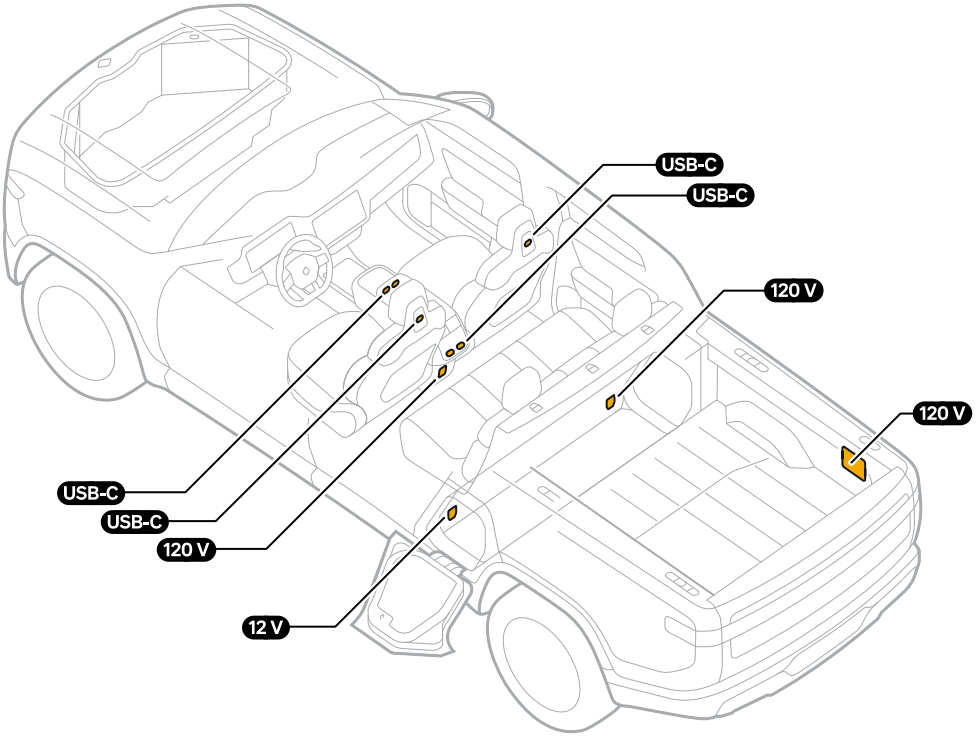

DANGER

Rivian-supplied accessories work best with your vehicle. To reduce risk of fire or a thermal event, use caution when leaving non-Rivian devices plugged in and unattended in the Gear Tunnel.

- Don't let objects obstruct any outlets being used.
- If you use a powered device not supplied by Rivian, turn off and unplug the 120 V outlet before you close the Gear Tunnel doors.
- Objects in the Gear Tunnel may shift as you drive. Use caution when opening the Gear Tunnel doors.

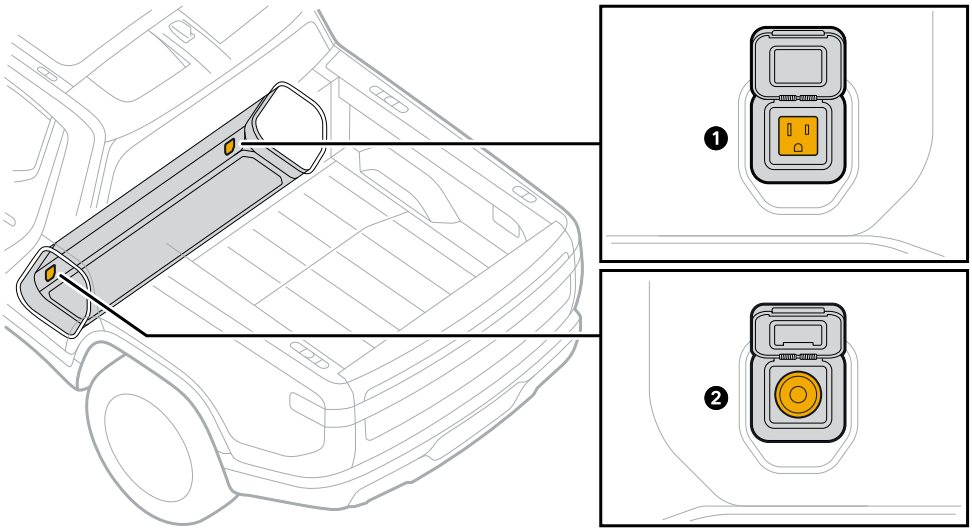

Item	Outlet	Power State
1	120 V	Power is off by default. After you turn them on from the **Energy** app on the center display, they all remain on.
2	12 V	Power is off when the vehicle is not being used and the 120 V outlets are turned off. Power is on while the vehicle is in use. 12 V outlet power can be extended by turning on the 120 V outlets.

CAUTION

- Don't use an outlet to power any device that requires over 1,500 W (1.5 kW) of power. If the 120 V circuits overload, the power cuts off. Unplug devices before you turn the outlets back on.
- Don't use more than one high-powered device at the same time. The 120 V outlets share the 1,500 W (1.5 kW) of power.
- Leaving the 120 V outlets powered on reduces the range of your vehicle, even if no devices are plugged in.

Accessory Power

Accessory power allows you to keep your vehicle powered on even when you walk away from your vehicle, lock the car, or restart the vehicle. A visual indicator appears in the center of the status bar to alert you if the power is on.

> **NOTE**
> Using accessory power reduces your range.

The 12 V and USB-C outlets, as well as the wireless charging pad, are always on when the vehicle is in use.

To send power to the 120 V outlets:

1. Choose **Energy** from the center display, and then choose **Outlets**.
2. You have two options:
   - **Auto:** Choose **Auto** if you want the 120 V outlets to automatically turn on when you use your vehicle and turn off when you leave.
   - **Timer:** Choose **Timer** to set the timer to keep the 120 V outlets on for a certain length of time even if you leave the vehicle. Choose **Update timer** to start the timer. The 120 V outlets turn off when the timer ends.

> **NOTES**
> - The Timer option also keeps the 12 V and USB-C outlets active even if you leave the vehicle.
> - The Auto and Timer options can be active at the same time.
> - While the timer is active, the outlets automatically turn off if the battery range becomes very low.

Updates and Upgrades

Vehicle Software Update

You can improve the functionality of your vehicle by updating its software over a Wi-Fi® or cellular connection.

When a software update is available for your vehicle, the vehicle notifies you and provides status information, such as the following:

- Version number of the software update
- Estimated time the software update will take

Choose **See what's new** to read the update details.

The software update notification offers three installation options:

- **Install Now** to start the software update.
- **Schedule for Later** to choose a time in the future for this update or for all future updates.
- **Not Now** to clear the message and not install the update.

When you choose **Schedule for Later**, you:

- Select an installation time in the picker.
- Optionally, you can turn on **Always auto install at [time]** to set up auto install of future software updates. You can activate or deactivate this setting in **Settings** ⚙ **> Updates** on the center display.
- Have the option to set up **Only install at home** for auto install.

If you have previously set up auto install, the notification displays the scheduled time and allows you to choose:

- **Install Now** to run the install right away.
- **Change Install Time** to select a different time.
- **Got it** to accept the previously scheduled time.

NOTES

- With auto install, the actual installation time may vary by a few minutes.
- The system allows at least 8 hours between the software download and installation to be sure you are aware it's scheduled.

To access or change the software settings or view the progress of a software update, go to **Settings** ⚙ **> Updates** on the center display.

IMPORTANT

Before you update the software for your vehicle, be sure that:

- The battery has at least 35 mi (56 km) of range.
- The vehicle is in **P** (Park).
- The vehicle isn't connected to a DC fast charger.
- Tire Change mode is off.
- System temperatures are not too high or too low.
- The 12 V battery is charged and in good health.
- Pet Comfort is off.
- Vehicle leveling is off.
- All passengers have exited the vehicle (suggested).

If a new system update is available but any of the requirements above are not met, you will receive a notification where you can choose:

- **Go to Updates** to learn more.
- **Got it** to close the notification.

CAUTION

While your vehicle updates the software, don't touch the pedals or buttons. Otherwise this may interrupt the update and disable the vehicle.

Storage access, locking, and security features are unavailable while the vehicle updates the software.

If the vehicle doesn't complete the software update, check the center display for additional information.

Non-Firmware Updates

Non-firmware updates don't require any downtime or a system reboot. As long as you have a Wi-Fi connection, these updates can be received and downloaded easily.

1. If you are not connected to Wi-Fi when a non-firmware update becomes available, you will receive a notification on the center display.
2. Select **Connect to Wi-Fi** to receive the download or **Do this later** to postpone it.
3. If you are connected to Wi-Fi, the update appears on **Vehicle > Updates** on the center display.
4. Select **Connect to Wi-Fi**.
5. Choose a Wi-Fi network and enter your password, if required.
6. The system automatically downloads the update during the vehicle's next sleep cycle.

Key Fob Software Update

Improve the functionality of the key fob by updating its software over a Wi-Fi® or cellular connection.

When a software update is available for the key fob, the vehicle notifies you and provides status information, such as the estimated time the software update will take.

To access software settings, go to **Settings** ⚙ **> Updates** on the center display.

IMPORTANT

Before updating the software for the key fob, do the following:

- Park the vehicle.
- Ensure that you have an extra key with you as a backup. The key fob won't work while the software updates.

Choose **Update Now** to start the update.

CAUTION

While the key fob updates the software, keep it in the vehicle.

If the key fob doesn't complete the software update, check the center display for additional information.

Upgrades

Upgrades give you access to premium features that unlock the full potential of your connected vehicle. Go to **Settings** ⚙ **> Upgrades** on the center display to manage your upgrades. You can also manage them from your Rivian account on a web browser or your Rivian mobile app.

> **NOTE**
> To manage the in-vehicle upgrades experience, ensure that your vehicle has connectivity.

Keys and Access

Rivian Accounts and Keys

About Rivian Accounts and Keys

The vehicle uses the key associated with a Rivian account and ID to identify and authorize a driver. Key types include:

- **Phone keys** - Rivian mobile app keys
- **Digital keys** - Native Apple or Google key technology in a phone or watch device's Wallet app that you can pair with your vehicle
- **Key fobs** - Physical key fobs
- **Key cards** - Physical key cards

To understand how vehicles and keys work with Rivian accounts and IDs:

- All vehicle drivers must have a Rivian account. When you set up a Rivian account either through the Rivian mobile app or in a web browser, the account assigns a Rivian ID.
- Each vehicle allows one driver to identify as the primary owner, and any others to identify as drivers.
  - **Primary owner** - The primary owner has all administrator rights.
  - **Driver** - Drivers have no administrator rights. They can access and drive the vehicle if they have an assigned physical key, or if they've set up a phone, watch, or digital key.
- For phone keys, the owner and any added drivers can set up their phone as a key as long as they are logged into the Rivian mobile app and are associated with a vehicle.
- For devices that support digital keys, the owner of a vehicle sets up the digital key, and the account attaches the associated Rivian ID to that key. Owners can then share the key with other drivers. A driver then links the key to their own account in the Rivian mobile app.
- Owners can add additional physical keys and assign them to other drivers, which associate the driver's Rivian account and ID to the assigned key.

The Rivian ID also saves driver preference information, such as seat position, in the driver profile.

NOTES

- If the owner revokes a driver's access, all digital and phone keys associated with that driver are deleted and any assigned physical keys are reassigned to the owner.
- To remove a physical key from the vehicle for security purposes, contact Rivian.

Key Types

Digital Key

About Digital Keys

Digital keys differ from phone keys by taking advantage of existing key support in the digital Wallet applications of compatible Apple and Android phones and devices. Primary owners of the vehicle set up the first digital key, and can then share the key with other drivers and friends.

Each vehicle supports up to 16 digital keys:

- Eight phone keys (one owner plus seven driver or shared "friend" keys)
- One watch key per phone digital key

> **NOTE**
> Depending on your device type, digital key may not be available. Check with the device manufacturer for compatibility.

Digital Key for Apple

You can use any of the following Apple devices as a digital key:

- iPhone® 11 or later with iOS 18.5.x
- Apple Watch® 6 or later with watchOS® 10.5

After setting up a key, refer to the Apple support site for information on how to use, manage, and share keys.

> **NOTES**
> - You must have an iCloud® account before you can set up a digital key.
> - iPhone 16E, iPhone SE, iPhone XS, and Watch SE support NFC entry only. They do not support passive entry. For passive entry, you can continue to use your Rivian mobile app phone key.
> - You can still unlock and start your vehicle for up to 5 hours with Power Reserve if your iPhone or Apple Watch needs a charge.

Digital Key for Android

You can use any of the following Android devices as a digital key:

- Google Pixel 6 and later, including Google Pixel Fold and Google Pixel 8 Pro
- Samsung Galaxy® S21 and later
- Select Android devices that run Android 12 and later

After setting up a key, search for "Set up or manage a digital car key" on the Android support site for information on how to use, manage, and share keys.

> **NOTE**
> You can still unlock and start your vehicle for a few hours if your Android digital key device needs a charge. Use the power saving feature on the device to prolong the life of the battery.

Set Up a Digital Key

Primary owners of the vehicle set up the first digital key, and can then share the key with other drivers and friends.

- For new vehicle owners, the digital key setup process appears on the Rivian mobile app when you accept ownership of the vehicle. Follow the prompts to complete the setup.
- For existing vehicle owners, look for the invitation to set up a digital key in the Rivian mobile app, or go to **Settings** ⚙ **> Drivers and keys > Upgrade your phone key**. Follow the prompts to complete the setup.

> **NOTES**
> - Not all phones and devices offer a digital key. See Digital Key for Apple and Digital Key for Android for lists of compatible devices.
> - If you currently use a Rivian mobile app phone key, and set up a digital key on the same device:
> - The digital key replaces the phone key if your device supports passive entry.
> - If your device does not support passive entry, and you want to use it, the digital key and phone key can coexist. To use this feature, link the digital key to the Rivian mobile app.
> - If you are the primary owner of the vehicle and migrate from a Rivian mobile app phone key to a digital key, all other drivers who have a paired phone can also upgrade to a digital key, but they're not required to do so.
> - If you do not currently have a Rivian mobile app phone key, and your mobile device is compatible with digital key, the mobile app will prompt you to set up a digital key.

Share a Digital Key

Only primary owners can share a digital key.

- If you are the primary owner of the vehicle, use the key sharing option in your phone's Wallet app to share your digital key with other drivers and friends.
  - For Apple devices, see the "Share your car key" section on the Apple support site for more information.
  - For Android devices, search for "Share a digital car key" on the Android support site for more information.
- If you received and accepted a shared digital key from the primary owner, the first time you approach the vehicle with the key, the vehicle recognizes and pairs with it. You can then use the shared key to unlock, lock, and drive the vehicle.

Start the Vehicle with a Digital Key

When you enter the vehicle with a digital key, simply press the brake and shift into **D** (Drive) to start and drive the vehicle. Some digital key devices, however, do not support passive start. When you attempt to start and drive the vehicle, the driver display will prompt you to place the device on the wireless charger. Place the device on the charger to proceed.

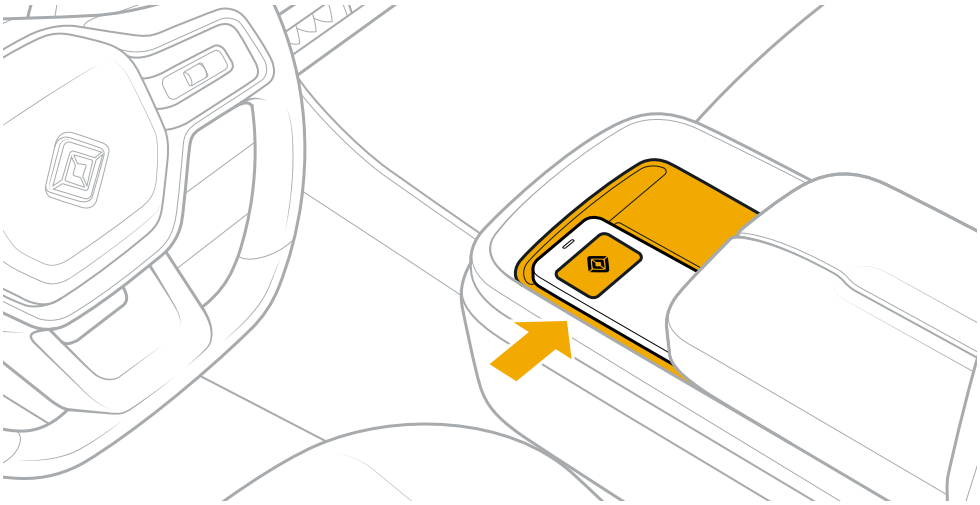

Phone Key

To use your phone to lock or unlock the vehicle, use one of the following methods:

- Select **Lock** or **Unlock** in the Rivian mobile app.
- Use Passive Entry when you are near the vehicle.

> **NOTE**
> You can pair up to four *Bluetooth*® Low Energy smartphones with the vehicle. See Rivian Mobile App for instructions.

Key Fob

About the Key Fob

Key fobs are optional and are available for purchase in the Gear Shop.

Add a Key Fob

To add a key fob and pair it with your vehicle, scan the QR code on the box containing the key fob, or:

1. Open the Rivian mobile app on your phone.
2. Go to **Drivers and keys** and choose **Add Key Fob** to start the pairing process.

Key Fob Buttons

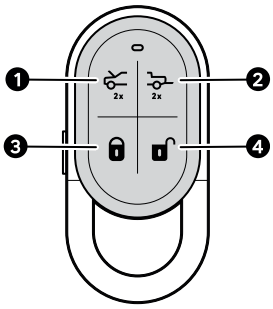

Number	Description	Button Sequence		Function
1	Front Trunk	• •	Double press	Open or close the front trunk.
		• • •	Press then double press	Single press to pause the front trunk when in motion. Double press to change direction.
2	Tailgate	• •	Double press	Open the tailgate.
3	Lock	•	Press	Lock all doors.
		• •	Double press	Lock all doors.
		▬	Hold	Activate panic alarm. Press **Unlock** on the key fob to stop the alarm.
		• ▬	Press then press and hold	Lock all doors and roll up all windows.

Number	Description	Button Sequence		Function
4	Unlock	•	Press	Unlock driver door or all doors. Configure this option from the center display.
		• •	Double press	Unlock all doors.
		• ▬	Press then press and hold	Unlock all doors and roll down all windows.

NOTES

- If the vehicle is asleep, it may take up to 8 seconds to lock or unlock the vehicle with the key fob.
- The vehicle notifies you when a software update is available for the key fob.

LED States

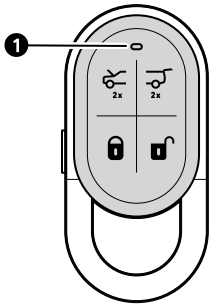

LED Color	State	What It Means
Amber	Quick flash	Vehicle recognizes a key fob button press and receives the command
Amber	Blinking	Software update or pairing mode
Red	Quick flash	Vehicle does not recognize a key fob button press and does not receive the command
Red	Flash twice	Low battery
Red	Solid for 3 seconds	Panic command sent

Start the Vehicle with a Key Fob

To drive the vehicle without a phone key, start it within 60 seconds of unlocking the vehicle with the key fob. If 60 seconds pass before you start the vehicle, touch the key fob to the charging tray on top of the center console for a few seconds. The vehicle chimes to confirm. Once you hear the chime, you can start the vehicle.

> **NOTE**
>
> If the key fob battery is dead, lay the key fob on the charging tray (button side up) until you hear the chime.

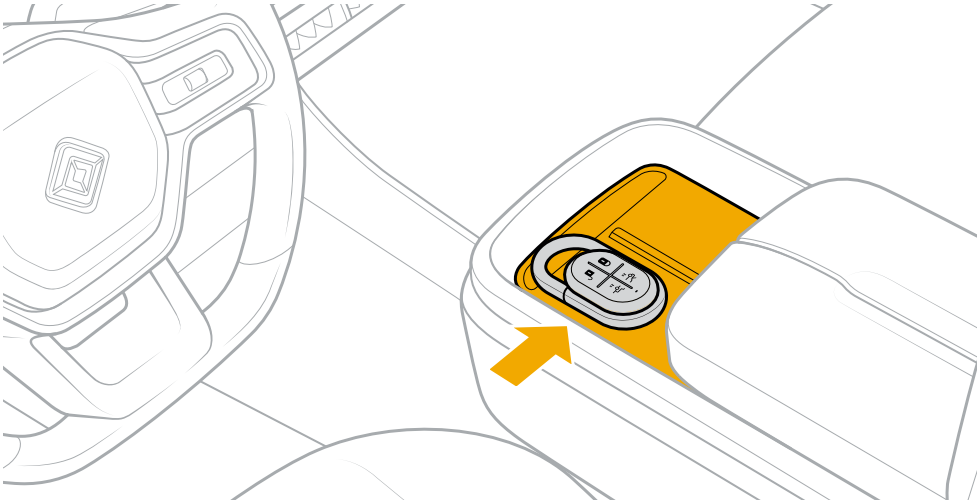

Key Card

To use the key card to lock or unlock the vehicle, touch it to the small indent on the outer end of the driver door handle and wait a few seconds.

NOTES

- The key card lock and unlock only works on the driver door. Passenger doors do not have card readers.
- If the vehicle is asleep, touch the key card to the driver door handle for up to 8 seconds.

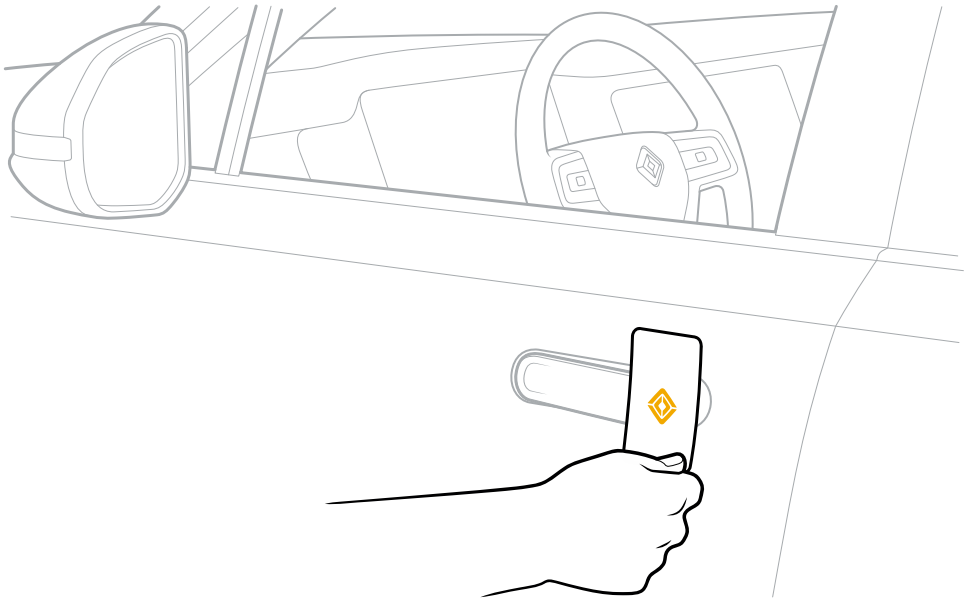

Start the Vehicle With a Key Card

To drive the vehicle without a phone key, start it within 60 seconds of unlocking the vehicle with the key card. If 60 seconds pass before you start the vehicle, touch the key card to the charging tray on top of the center console for a few seconds. The vehicle chimes to confirm. Once you hear the chime, you can start the vehicle.

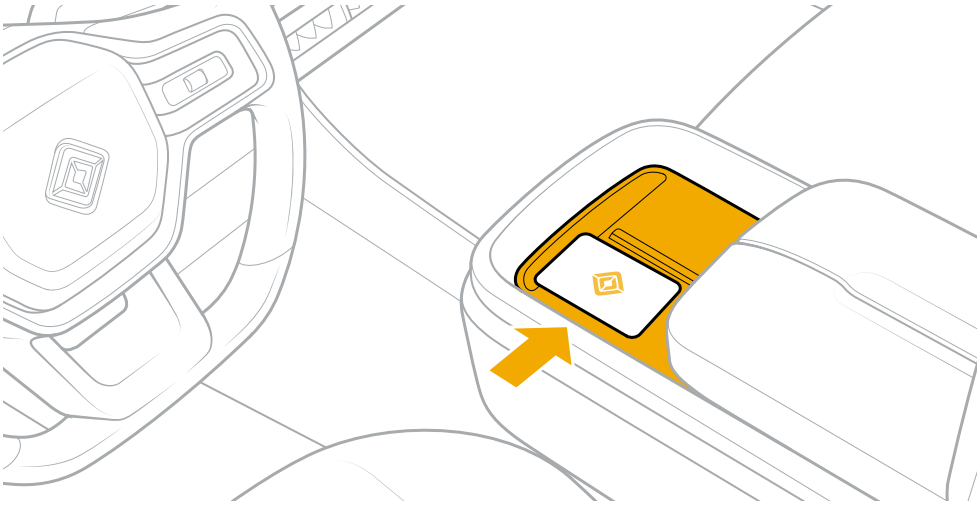

Lock and Unlock

About Locking and Unlocking

Use any of the following keys and methods to lock and unlock the vehicle:

- Choose Lock or Unlock on the digital key within your Wallet app (or in the Rivian mobile app if you have a phone key).
- Press the Lock or Unlock button on the key fob.
- Tap to lock or unlock the driver door handle with the key card or key fob.

> **NOTE**
> To use this function with a digital key, the device must have an NFC (Near Field Communication) chip. See NFC Entry with a Digital Key for more information.

- Choose the Lock or Unlock icon in the center or rear display.
- Use Passive Entry when you are near the vehicle with a digital key, phone key, or key fob. The vehicle automatically unlocks when you approach the vehicle and locks when you walk away.
- Use Press to Unlock at Home on the driver door handle when you have a digital or phone key with you.

Go to **Settings** ⚙ **> Access** to set all locking behaviors.

> **NOTES**
> - In the **Settings** ⚙ **> Drivers and keys** menu, indicators (black dots) identify the key that unlocked the vehicle and the owner of that key.
> - The doors automatically lock when you start driving.
> - If the vehicle receives an active or passive unlock command, and a door is not opened within 2 minutes, the vehicle relocks automatically.

Passive Entry

Passive entry automatically locks or unlocks the vehicle when you are nearby with a digital key, key fob, or phone key. To turn on passive entry:

1. Go to **Settings** ⚙ **> Access** in the vehicle center display.
2. Turn on **Passive entry**.
3. Select the keys to activate.

> **NOTES**
> - Not all digital key devices support passive entry. Check with your device manufacturer for compatibility.
> - If you are using an Android compatible device, you can use passive entry on only one vehicle (whether Rivian or other manufacturer). To use passive entry with your Rivian vehicle, go to the key details in your digital key device Wallet app, and set the device as the default key.

To customize the automatic lock and unlock behavior of these keys at a "home" location that you set, do the following:

1. If you haven't yet set a home location:
   a. Go to **Settings** ⚙ **> Access** in the vehicle center display.
   b. Under "Locking behavior at home," choose **Set Home Location**.
   c. Enter the address and save it.
2. Choose one of the following behaviors for all active passive entry keys:
   a. **Lock and Unlock** (default): Lock and unlock when at home.
   b. **Lock only:** Lock but don't unlock when at home. With this setting, you must actively unlock the vehicle with a key.
   c. **Off:** Do not lock or unlock when at home. With this setting, you must actively lock and unlock the vehicle with a key.

> **NOTE**
> "Lock only" at home applies only to the driver and passenger doors. The storage areas—front trunk, Gear Tunnel doors, and tailgate—continue to unlock and lock with a nearby key fob or phone key.

Tap to Lock or Unlock

Instead of using the key fob buttons to lock or unlock the driver door, hold the back of the key fob against the small indent on the outer end of the door handle and wait a few seconds to lock or unlock the door.

NOTES

- Tap to lock or unlock only works on the driver door. You can't tap to lock or unlock a passenger door.
- Tap to lock or unlock works even if the key fob battery is dead.
- If the vehicle is asleep, touch the key fob to the driver door handle for up to 8 seconds.

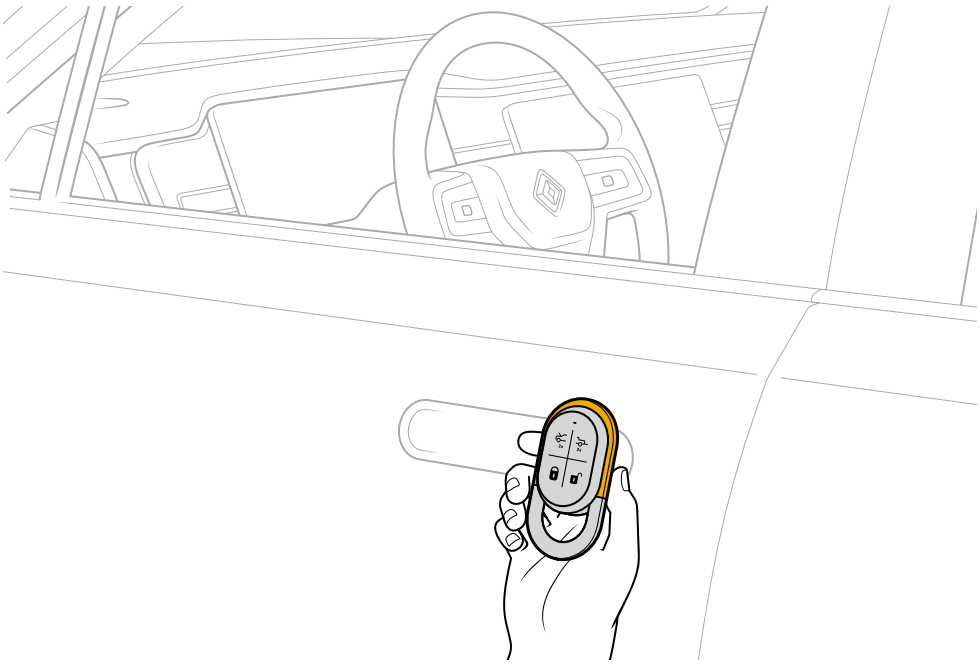

Press to Unlock at Home

If passive entry is turned on, and you have **Lock only** or **Off** set under Locking behavior at home, you would normally need to actively unlock the vehicle when you're at home. To avoid this, you can instead press the sensor on the driver door handle to unlock the door as long as you have your digital key, phone key, or key fob with you.

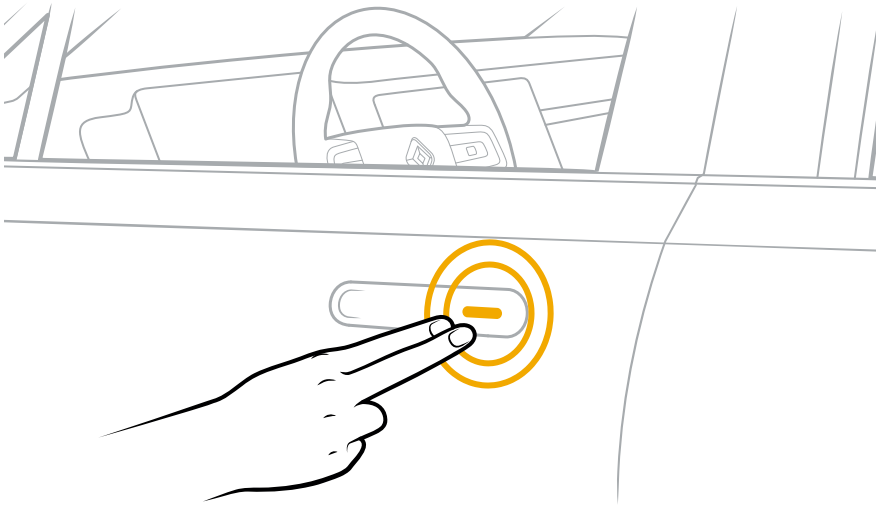

NFC Entry with a Digital Key

Check with your digital key device manufacturer to confirm the device contains an NFC (Near Field Communication) chip. If it does, you can use it to lock and unlock the vehicle driver door at the NFC reader on the door handle. Hold the device within 1.5 in (4 cm) of the small indent on the outer end of the handle.

NOTES

- NFC chips are not visible from the outside of a device.
  - For a phone digital key, the NFC chip is located on the back toward the top center area of the phone.
  - For a watch digital key, the NFC chip is embedded in the head of the watch. See the manufacturer's instructions for the location of the chip and how to use it.
- NFC entry with a digital key only works on the driver door. Passenger doors do not have NFC readers.
- NFC entry works when your device is in Express Mode, which is on by default. If Express Mode is turned off, you'll need to enter your Wallet app password first before using NFC entry.
- If your digital key has a low or dead battery, you must have Express Mode turned on to lock and unlock the vehicle.
- If the vehicle is asleep, hold the digital key within 1.5 in (4 cm) of the NFC reader on the door handle for up to 8 seconds.

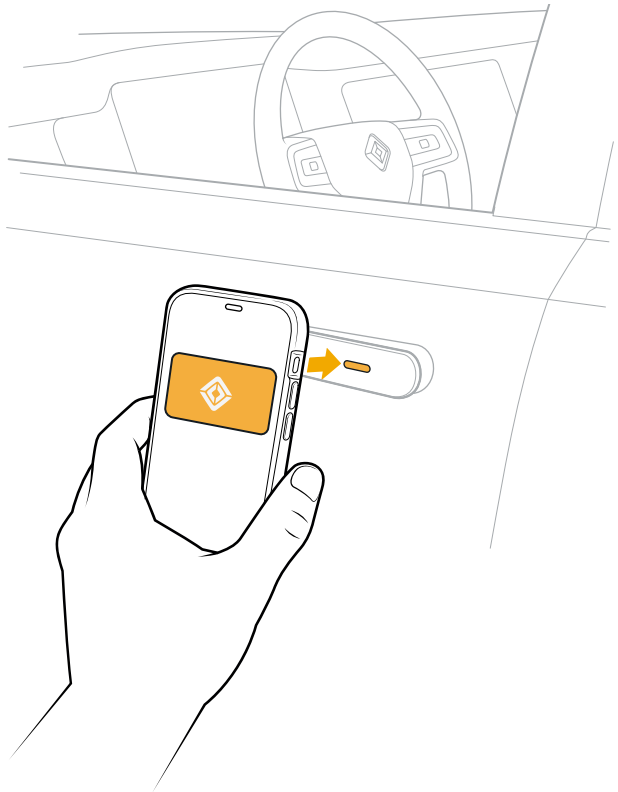

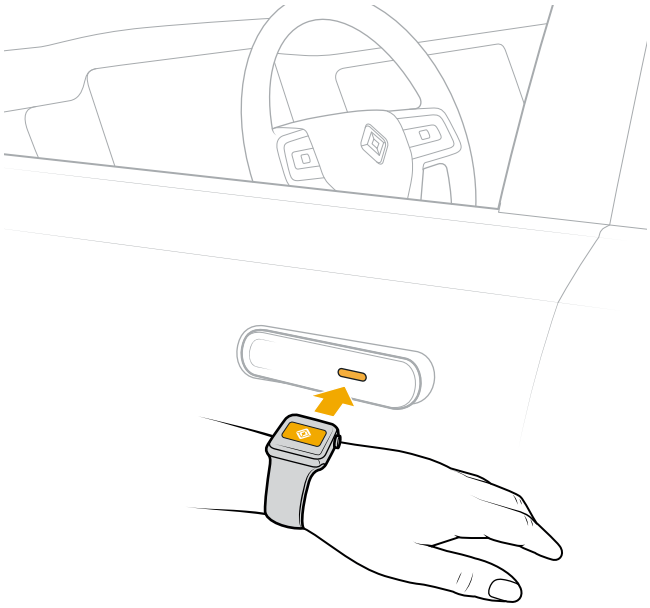

Lock and Unlock on a Display

The lock and unlock icons on the center and rear displays show the lock status of the vehicle doors.

- Choose **Lock** to lock all doors.
- Choose **Unlock** to unlock all doors.

The table below shows the three possible lock and unlock states.

Icon	Status
	All doors are locked.
	One or more doors are unlocked.
	All doors are unlocked.

Child Locks

Child locks are available on either or both of the rear vehicle doors. When engaged, child locks prevent passengers from opening the door from the inside of the vehicle. With child locks in place, you can open the rear vehicle doors from the outside only.

To engage or disengage child locks:

1. Go to **Vehicle** > **Shortcuts** > **Child door locks**.
2. Choose **Edit**.
3. Select one or both doors to turn child locks on or off.
4. Choose **Done**.

The table below shows the two possible lock icons and states.

Icon	Status
	Door is locked.
	Door is unlocked.

You can also manage child locks in **Settings** > **Access** > **Child door locks**.

Manage Lock Sounds

When the vehicle detects a Lock command from a key outside the vehicle, it confirms the lock action with a sound. Available sounds include a bluebird chirp (the default), owl hoot, or a combination of the two. The lock sound is On by default.

To change the lock sound or to turn it on or off:

1. Go to **Settings** ⚙ **> Access** on the center display.
2. Under **Lock sound (exterior)**, select one of the following:
   a. **Bluebird** to use the bluebird chirp.
   b. **Owl** to use the owl hoot.
   c. **Day/Night** to use the bluebird chirp during daytime light conditions, and the owl hoot during nighttime light conditions.
   d. The toggle button to turn the lock sound on or off.

Vehicle Access

Doors

Open a Door from the Outside

When you unlock the vehicle, the exterior door handles present. Pull a handle to open a door.

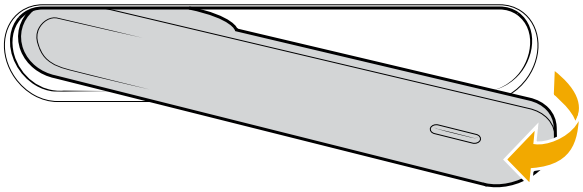

NOTES

- Exterior handles retract and lock when you drive the vehicle.
- In below freezing conditions, it's possible for the door handles to freeze and not present during unlock. To unfreeze and open a handle, press in on the rearward end of it a few times until it "breaks" the ice and opens.
- To open an unlocked door if a handle doesn't present, push the indentation at the back of the door handle, and then pull the handle as usual to open the door.

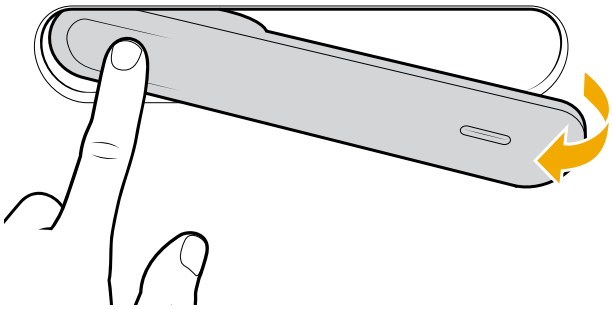

- Doors unlock and exterior door handles present 6 seconds after a collision event ends.

Open a Front Door from the Inside

Press the e-latch or pull the handle to open the door.

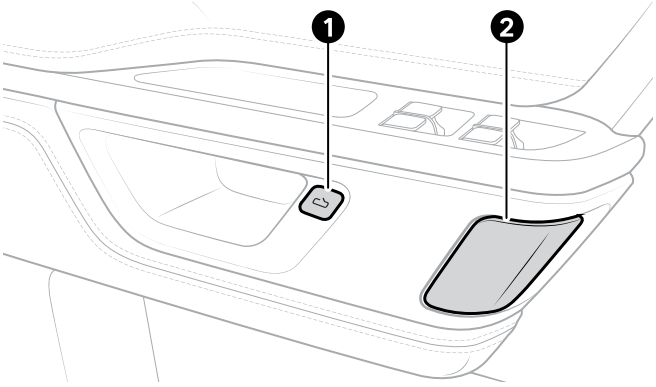

Item	Description
1	E-latch
2	Door handle

Open a Rear Door from the Inside

Press the e-latch to open the door.

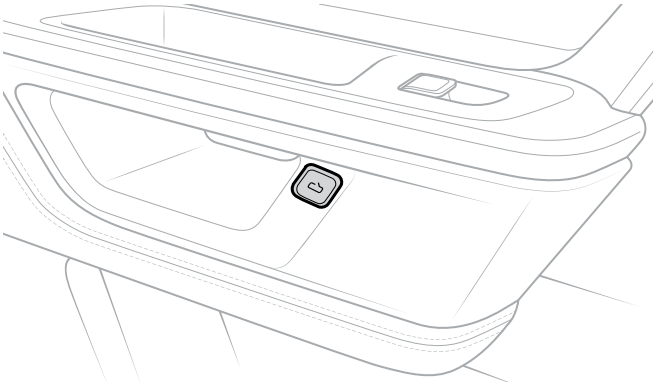

NOTES

- The interior e-latches do not function under the following conditions:
  - When the vehicle is moving above 8 mph (12 km/h)
  - When the child lock is activated on a specific door
  - Between the moment the vehicle detects a collision and 6 seconds after the collision event ends
- Following a collision or power loss of the electrical system, the vehicle power supply and power distribution systems continue to support operation of the interior e-latches.
- To exit the vehicle after a collision or other emergency incident, press the e-latch as you normally would to open the door.
- In the unlikely event the redundant power distribution system can't continue to support operation of the interior e-latches over an extended period of time, you can use the manual service release to open a rear door from the inside.

Roomy Entry and Exit

The roomy entry and exit feature setting allows the driver seat and steering wheel to move automatically at the beginning and end of a drive for easier access. The setting and the entry and exit position are saved to your specific user profile. The roomy entry and exit feature is disabled by default.

IMPORTANT

A notification appears if the seat or steering wheel is not calibrated. If they are not calibrated, the roomy entry and exit setting and automatic driving position adjustments are not available. See Calibrate Driver Seat or Calibrate Steering Wheel to reset calibration.

To set up roomy entry and exit, do the following:

1. Choose **Settings** ⚙ **> Access** on the center display.
2. Choose **Set position** under Roomy entry and exit.
3. After you ensure there is nothing behind your seat, choose **Next** to continue the setup.
4. Use the steering wheel thumb controls to adjust the steering wheel to your desired position.
5. Use the controls on the side of the seat to adjust the seat to your desired position.

WARNING

To prevent any injury or damage, ensure there is no occupant or any object(s) around or behind your seat when setting your entry and exit position.

6. Choose **Remember position** to save your desired steering wheel and seat positions.

NOTE

If you need to stop the automatic seat and steering wheel movement while they're in motion, press any side seat control or the leftmost button on the left side of the steering wheel.

7. After completing the setup, a toggle switch and Change Position and Forget Position buttons appear.

Button	Description
Toggle switch	Enables or disables your roomy entry and exit position.
Change Position	Make changes to your already saved steering wheel and seat positions.
Forget Position	Removes your saved position and turns off roomy entry and exit. If you forget the position and the setting turns off, you will have to setup the position again like you did the first time.
Set Position	Set up the roomy position for the first time or whenever there is no position saved.

NOTES

- The vehicle adjusts to your driving position when you enter the vehicle and press the brake pedal.
- Roomy entry and exit moves the seat to the entry and exit position when the driver unbuckles the seat belt at the end of a drive.

Kneel Vehicle

About Kneel Vehicle

To lower the vehicle to kneel height and make it easier to get in and out of it when you park, use one of the following methods:

- Kneel on demand quick control to lower on demand.
- Kneel in Park setting to lower automatically when you shift into **P** (Park).

Kneel features and behaviors:

- Kneel is available when the vehicle is in All-Purpose, Sport, Conserve, or Snow drive mode, regardless of the Auto ride height setting. Kneel isn't available in off-road drive modes.
- Lowering pauses if one or more doors are opened before Kneel finishes, and resumes if all doors are closed within 60 seconds. If a door remains open longer than 60 seconds, Kneel doesn't resume lowering.
- During lowering to Kneel, press the steering wheel right thumb control button to cancel lowering and return to the previous ride height.
- The vehicle automatically raises from Kneel and returns to its previous ride height after you shift out of **P** (Park) and start driving over 5 mph (8 km/h).

> **NOTE**
> If the vehicle was in High ride height prior to Kneel, it returns to Standard ride height when you start driving.

- If you enable the Kneel on demand quick control, and you don't transition the vehicle into **P** (Park), the vehicle remains in Kneel until you drive over 25 mph (40 km/h). If you do transition the vehicle into **P** (Park), the feature follows the Kneel in Park behavior.
- Certain conditions may prevent Kneel availability, such as a high air suspension compressor temperature. Once the air compressor cools, the vehicle lowers to Kneel the next time you drive over 5 mph (8 km/h) and shift into **P** (Park), or the next time you use Kneel on demand. For information on why Kneel isn't available, choose the **Kneel on demand** quick control.
- When you switch to a driver profile that has different Kneel vehicle settings than the current, or if you switch while Kneel is active, the vehicle adopts the new settings after you drive over 5 mph (8 km/h).

Kneel on Demand

WARNING

To prevent any injury or damage, ensure there is no person or any object(s) under the vehicle when Kneel on demand is active.

Choose the **Kneel on demand** quick control in one of the following situations to lower the vehicle to Kneel height:

- While driving under 20 mph (32 km/h) to start the lowering process prior to parking the vehicle
- If the Kneel in Park setting is not enabled, to lower the vehicle when desired

You can also use the Kneel on demand quick control while parked to raise the vehicle from Kneel to its former ride height.

NOTES

- If the vehicle was in High ride height prior to Kneel, it returns to Standard ride height when you start driving.
- If the Kneel on demand quick control is greyed out, and you want to know why, choose it for more information.

Kneel in Park Setting

WARNING

To prevent any injury or damage, ensure there is no person or any object(s) under the vehicle when Kneel in Park is active.

To automatically lower the vehicle to Kneel height, enable the Kneel in Park setting. With this setting turned on, the vehicle lowers when you shift it into **P** (Park).

Kneel in Park is disabled by default. To change this setting, and save it to your driver profile:

1. Choose **Settings** ⚙ **> Access** on the center display.
2. Choose **Kneel in Park** to enable or disable it.

NOTE

If you manually exit Kneel in Park by changing ride heights or drive modes, Kneel re-engages the next time you drive over 5 mph (8 km/h) and shift into **P** (Park).

Drive Access and Security

Multi-Factor Drive

Multi-factor Drive requires the key owner's approval prior to vehicle start. To enable this setting:

1. Log into the vehicle's primary owner account in the Rivian mobile app.
2. Go to **Security and access** and turn on **Multi-factor Drive**.

To start the vehicle when Multi-factor Drive is turned on:

1. Unlock and enter the vehicle.
2. Press the brake. A notification appears on the driver display, and a request to approve the drive appears on the phone of the key owner.
3. The key owner approves the drive.
4. After the driver display notification clears, start the vehicle.

If the key owner does not receive the approval request on their phone, or if the notification on the driver display does not clear, do one of the following in the driver display notification:

- Choose **Send it again** to resend the request to the phone.
- Choose **Try another way**. This opens a keypad on the driver display requesting a time-sensitive passcode. If you don't know the code, and you are the key owner:
  a. Choose **Where's my passcode** below the keypad.
  b. Scan the QR code with your phone. The passcode appears on your phone.
  c. Enter the passcode into the keypad.

To turn off **Multi-factor Drive**, go to **Security and access** in the Rivian mobile app.

NOTES

- Only the primary owner can turn Multi-factor Drive on and off. The setting applies to all drivers and keys associated with the vehicle.
- To approve a drive, the key owner must have a Rivian account associated with the key, and the key must be paired with the vehicle.
- The key owner can also access the passcode from the **Security and access** screen in the Rivian mobile app. Choose **View time-based passcode**.

Profile Authentication

Enable **Lock profile** in the Rivian mobile app and create a PIN (Personal Identification Number) to add a layer of security to your in-vehicle driver profile. With Lock profile turned on, the vehicle authenticates you and your profile only if it detects a digital or phone key. If it doesn't detect a key, the center display prompts for a PIN. You can also choose to always require a PIN.

> **NOTE**
> Key fobs and key cards are not detected and will always require a PIN when the lock is enabled.

When a profile is locked, the following features unique to the profile are unavailable:

- Navigation locations and history (saved places, recent destinations)
- Notifications on the center display
- Media apps and media content
- Viewing stored camera clips
- Garage and HomeLink® controls
- Most profile-sensitive settings
- Camp mode
- AI memory features and AI-related third-party apps (for example, calendar integrations used by virtual assistants or remote UI agents)
- Personal Wi-Fi® hotspot
- Rivian Assistant

These features remain available: climate controls, seat adjustment, vehicle lock and unlock, profile change toggle, Wi-Fi® and LTE connectivity, *Bluetooth*®, drive modes, Energy app, live camera views, and vehicle storage controls.

To enable Lock profile:

1. In the Rivian mobile app, go to **Security and access > Vehicle security**.
2. Turn on **Lock profile**. Also turn on **Always require PIN to access profile**, if desired.
3. Enter a 4- to 6-digit PIN.
4. Confirm the PIN. Lock profile is now active.

Theft Protection

The vehicle has a built-in security feature that prevents unauthorized drives. Before authorizing a drive, the vehicle checks for a valid key, which it can recognize with a connected device inside the vehicle or with an authenticated vehicle unlock.

For some key types, if the driver doesn't start driving within a given amount of time, the vehicle requires reauthorization. The driver can perform one of the valid unlock commands again to reauthorize and start driving.

Authorization can also end when the security alarm triggers, when you lock the vehicle, when a phone key disconnects, or when other vehicle-specific conditions are met.

WARNING

Don't leave the vehicle unattended and unlocked with your key inside.

Garages

Garage Door Opener Brands

NOTES

- Gates are not currently supported.
- Not all garage door opener brands are supported. Check the ARQ Compatibility Chart to determine if a model you intend to purchase is compatible with your Rivian vehicle.

Supported Garage Opener Brands		
AccessMaster	Allstar	AssureLink
BuildMark	Chamberlain	Craftsman
Do-It	Direct Drive	DTM System
Eazymatic	Genie	Guardian
Hormann	LiftMaster	Linear
Marantec	Master Mechanic	Merlin
Overhead Door	Performax	Raynor
Ryobi	Sommer	Wayne Dalton
Xtreme Garage		

Add a Garage

Use the Add a Garage feature along with your garage door remote to pair an installed garage door opener with the vehicle and optionally to set up a one-touch prompt to access your garage when you approach or leave its location. Do the following:

1. Park near and in front of the garage (not under the door).
2. On the center display, go to **Settings** **> Garages** .
3. Choose (+) to add a garage.
4. Follow the instructions on the screen to add the garage.

NOTES

- For some garage pairings, you may need the following:
  - Access to the installed garage door opener hardware unit
  - Another person to assist you
- You can pair up to 8 garages with a vehicle.

One-Touch Open or Close

If you associate a location with a garage, when you approach or leave the garage, a one-touch prompt appears on the driver display to open or close it with the right thumb control button on the steering wheel. This setting is optional.

If you have multiple paired garages at the same location, use the thumbwheel to scroll and then select the appropriate garage.

Here's how to set it up.

1. Park near and in front of the garage (not under the door).
2. If you are pairing a new garage and remote, associate the location in the last step of the setup process.

> **NOTE**
> To add or delete a location for an existing garage, on the center display, go to **Settings** ⚙ **> Garages** 🏠 , choose the garage, and associate the location.

3. On the panel, choose **Use this Location** to associate a location with the garage, or choose **Maybe Later** if you don't want to add a location.

> **NOTE**
> Setting up a location creates a zone radius from the point where you set up the location. When you approach or leave the garage, the prompt appears on the driver display as long as the vehicle is inside the radius.

Open or Close a Garage Door

1. On the center display, go to **Settings** ⚙ **> Garages** 🏠.
2. Choose the name of the desired garage door to open or close it.
3. If one-touch access prompts are enabled, open or close a garage door when the prompt appears on the driver display.

> **NOTE**
> Enable or disable one-touch prompts for access to your garages within range of their saved locations. Choose **>** to the right of the garage name to enable or disable these prompts.

Rename a Garage

1. On the center display, go to **Settings** ⚙ **> Garages** 🏠.
2. Choose **>** to the right of the garage name.
3. Select **Edit** ✎.
4. Use the keyboard to enter a new name for the garage.
5. Choose **Save**.

Delete a Garage

1. On the center display, go to **Settings** ⚙ **> Garages** 🏠.
2. Choose **>** to the right of the garage name.
3. Select **Remove garage** to delete the garage.

> **NOTE**
> When you delete a paired garage, it removes both the garage and its stored location.

Safety

Seats

Adjust the Front Seats

Use the slide, recline, tilt, and lift controls to adjust the driver and front passenger seats. Save driver seat settings in your driver profile.

NOTES

- Lumbar support adjustment is available on some vehicle packages.
- If the driver seat loses calibration, recalibrate the seat.

Driver Seat

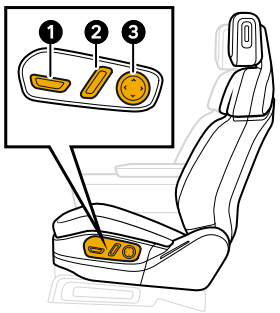

Front Passenger Seat

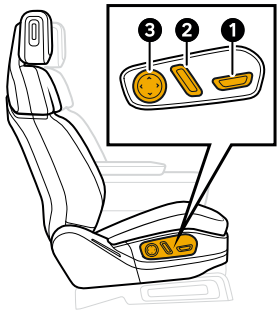

Item	Description
1	Slide, lift and tilt control
2	Recline control
3	Lumbar support adjustment

Seat Climate Control

The driver seat, front passenger seat, left rear seat, and right rear seat can heat. Ventilation may also be included. Refer to Use Seat Climate Control.

Seat Belts

Seat Belt Warnings

DANGER

Adjust the seat to the proper position before operating the vehicle. Make sure the shoulder belt sits firmly across your chest and shoulder. Don't operate the vehicle if there is a gap between the seat belt and your chest.

To avoid risk of injury or death from sudden stops, collisions, or improper use, do the following:

- Use one seat belt per person.
- Fasten seat belts before the vehicle starts to move to avoid risk of injury from sudden stops or collisions.
- Ensure that all seat belts are fastened securely.
- Ensure that the seat belt isn't worn twisted or reversed.
- Wear the seat belt so that it rests over the shoulder without touching the neck. Don't route the belt behind your back.
- Wear the lap belt as low as possible on your hips.
- Sit well back in the seat and in an upright position.
- Don't tamper with or make modifications to the seat belt that will prevent it from taking up slack, such as using comfort clips. A slack seat belt could significantly reduce the effectiveness of the shoulder belt in an accident.
- Take care handling the metal portion of the seat belt as it can become very hot in sunny weather.
- Have a service professional routinely inspect all seat belt parts. In case of an accident, we recommend taking the vehicle to a Rivian certified collision center for a safety inspection. In some cases, seat belt parts in use during an accident may need to be replaced, even if there isn't any visible damage.

Fasten Seat Belts

1. Adjust the seat to an upright position.
2. Sit with your back and hips against the back of the seat.
3. Hold the tongue plate and pull the belt toward the buckle.

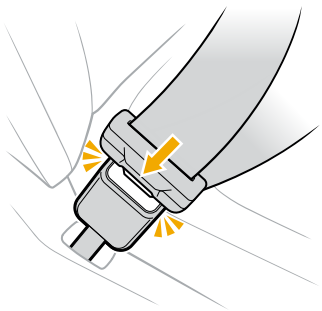

NOTE

Avoid twisting the seat belt, and avoid quick or jerky movements to prevent the belt from locking.

4. Insert the tongue plate into the buckle until you hear a click.

5. Adjust the lap belt to be as low as possible on the hips.

6. Press and hold the shoulder anchor button and slide it up or down to adjust the shoulder belt height.

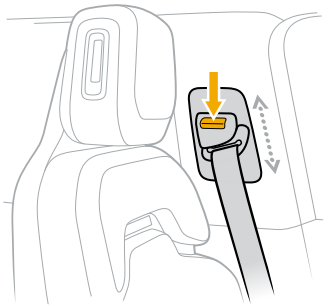

WARNING

The shoulder belt should pass over the middle of the shoulder and across the chest without touching the neck. The seat belts aren't meant to be used with any tension-relieving devices, such as comfort clips. Wearing the belt in an improper position or introducing slack to the belt could significantly reduce its effectiveness in an accident.

Unfasten Seat Belts

1. Press the release button on the buckle.
2. Allow the seat belt to retract slowly to avoid any twists.
3. Ensure that the belt has fully retracted to avoid closing the door on the belt or tongue plate.

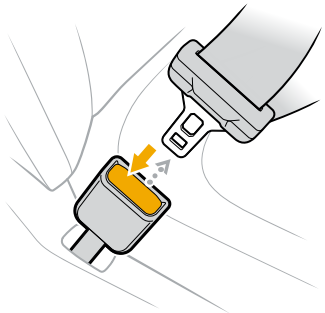

Children

Children should be in the rear seats and properly restrained in a child seat appropriate for their height and weight.

If the child is too big for a child seat, they can be restrained using the seat belt. For proper fit, the shoulder belt should cross over the child's front and not touch the face or neck. The lap belt should be secured as low as possible on the hips and not on the child's waist. See also Child Seats.

Pregnant Occupants

Wear the lap belt securely and as low as possible over the hips, not over the waist. Wear the shoulder belt between the breasts and to the side of the abdomen.

Seat Belt Reminder

- Fasten the seat belts properly when operating the vehicle.
- If occupied seats are unbuckled, the Seat Belt Reminder indicator lights up on the driver display, along with a notification. Under certain conditions, you'll hear an audible warning.
- A child seat or other heavy object placed on a seat could cause the Seat Belt Reminder indicator to remain on even when the seat is unoccupied.

NOTE

If you have a child seat installed, buckle the seat belt to dismiss the chimes.

- An accompanying graphic appears on the driver display to show the seat belt statuses for all seats.

Seat Belt Status	Definition
Solid white circle	Unoccupied seat
Solid grey circle	Buckled seat
Solid red X	Unbuckled seat

Seat Belt Pretensioners

First-row and second-row outboard seat belts are equipped with a seat belt pretensioner. The pretensioners activate along with the airbags during accidents that involve force to the front and sides of the vehicle, including rollover accidents. In these instances, the seat belt pretensioner removes slack in the seat belt to help restrain the occupant. The seat belt pretensioners aren't designed to activate in minor impacts.

If the seat belt pretensioners have been activated or are malfunctioning so that the seat belts can't retract or pull out, the corresponding airbag indicators appear on the driver display. Contact Rivian for assistance or service.

PASSENGER
AIRBAG OFF

CAUTION

Modifications or front-end attachments to the vehicle, such as bars, winches, or snow plows, may affect seat belt pretensioner sensors. Don't modify the vehicle with parts not approved by Rivian.

Seat Belt Maintenance

Use mild soap with water and a soft cloth to clean surface stains on the seat belt. Inspect the seat belts periodically for signs of damage, including wear and tear. Contact Rivian to schedule service for your seat belts.

Don't use bleach or other harsh substances to clean the belts because this can affect their strength and performance. Don't make modifications to the seat belts that would prevent them from properly operating.

Head Restraints

Front Seat Head Restraints

The driver seat and passenger seat are equipped with integrated head restraints. The head restraints aren't adjustable.

Rear Center Seat Head Restraint

To adjust the rear center seat head restraint, pull up on the restraint until it locks in place.

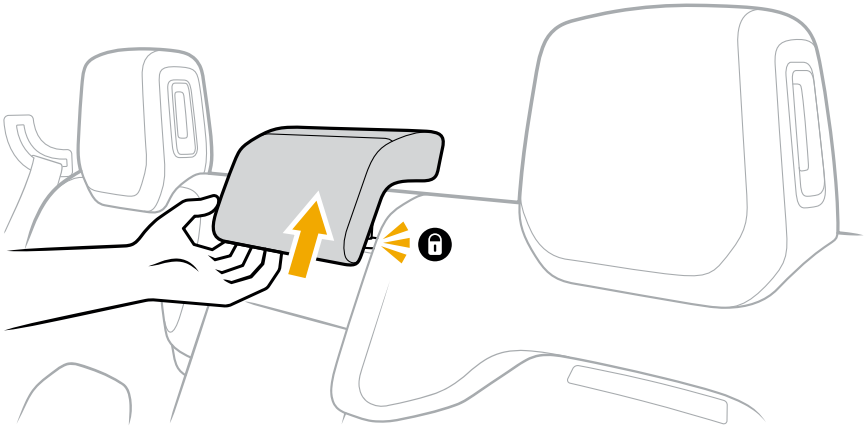

To lower the head restraint, push the button at the bottom of the left head restraint rod while pushing down on the top of the head restraint.

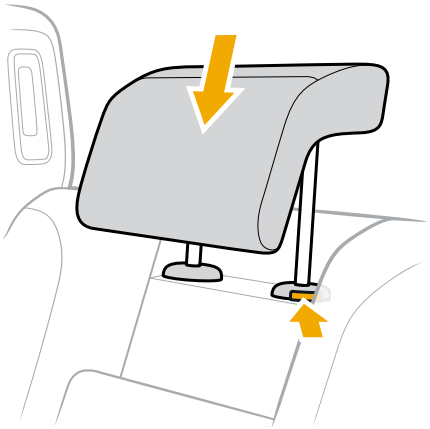

DANGER

Lift the rear center seat head restraint into its locked position before a passenger occupies the seat to help minimize the risk of injuries (including injuries of the neck) in the event of a crash. The driver should not operate the vehicle until the head restraint is in the locked position.

Rear Outboard Seat Head Restraints

The second-row outboard seat head restraints aren't adjustable.

Remove the head restraints from the rear outboard seats by pushing the buttons at the bottom of the head restraint rods and lifting the head restraint straight up.

CAUTION

Removal and re-installation of the rear outboard seat head restraints should only be performed by qualified service personnel.

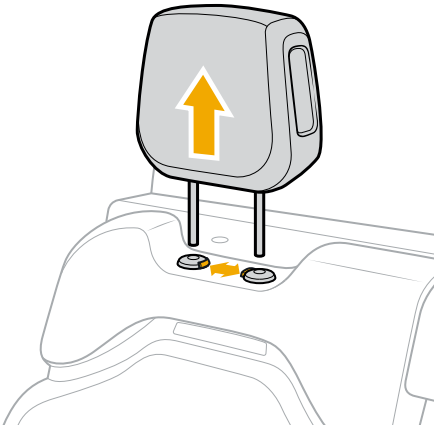

To reinstall the head restraint, align the rods with the holes at the top of the seat and push the top of the head restraint all the way down until it locks in place.

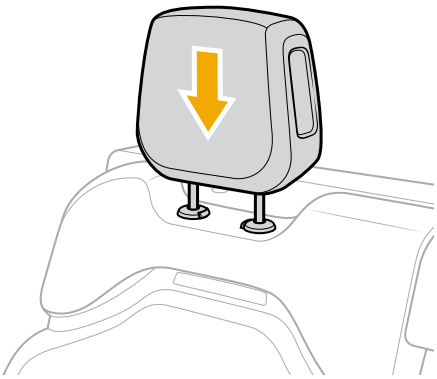

DANGER

Ensure the outboard head restraints are all the way down into the locked position before a passenger occupies the outboard seats to help minimize the risk of injuries, including neck injuries, in the event of a crash. The driver should not operate the vehicle until the outboard head restraints are in the locked position.

Child Seats

Getting Started

All child restraint systems are designed to be secured in vehicle seats by the following:

- Lap belts
- Lap belt portion of a lap-shoulder belt
- Lower anchors (LATCH/ISOFIX)
- Top tether anchors

DANGER

- The National Highway Traffic Safety Administration (NHTSA) requires that infants and small children be seated in an approved and appropriate child seat at all times while the vehicle is in motion.
- Properly secure the child seat before the vehicle is in motion, even if the child seat is unoccupied, because an unsecured child seat can injure passengers.
- Don't install a child seat in any of the front seats to avoid serious injury and death to the child from the deployment of the airbags. According to accident statistics, children are safer when properly restrained in the rear seating positions than in the front seating positions.
- Properly secure child restraints in the vehicle to avoid endangering children in a crash.
- Sunny weather can heat up the metal portion of the seat belts. Use caution when seating a child and touching seat belts in the vehicle.

WARNING

- You can use your Rivian account (user profile) to automatically move the driver seat to a desired position. However, ensure that the front seats are a safe and comfortable distance from a child seat or a child sitting directly behind them in the second row.
- Don't dress children in bulky clothing when seating them in child seats since this may reduce the effectiveness of the restraint system.
- Don't leave children unattended, even if they are secured in a child seat.
- Don't use a child seat that has been involved in a collision, even if it doesn't show any sign of damage.

Choose a Child Seat

Children should sit in the rear seats, properly restrained in child or booster seats appropriate for their height and weight. Use a child seat that meets the Federal Motor Vehicle Safety Standards (FMVSS) and is appropriate for the child's age, height, and weight. Also check child seat usage recommendations with local and state laws, the American Academy of Pediatrics (AAP), and the National Highway Traffic Safety Administration (NHTSA). Compliance documentation can either be found on a sticker affixed to the child seat or in the instructions included with the seat. Follow the manufacturer's instructions when installing a child seat in the vehicle. Before you purchase a child seat, determine if the seat is compatible with your vehicle.

Install a Child Seat

Follow the state and seat manufacturer guidelines for whether to install the child seat rear- or forward-facing. These rules are often based on the child's age, height, and weight.

If a child seat can't be installed securely in the rear-center seating position due to seat size, space limitations, or seat contours, install the child seat on either side position of the outboard seats near the windows. The rear-center seating position may best accommodate a smaller booster seat or an infant bucket seat with a bottom base that fits snugly against the contours of the seat cushions. These types of child seats should be secured snugly with the vehicle's seat belt.

1. Position the child seat either rear-facing or forward-facing on the vehicle's seat.

IMPORTANT

If a forward-facing child seat requires a top tether anchor, route the top tether strap over the center of the head restraint. Then latch the hook onto the tether anchorage behind the seat and tighten the strap.

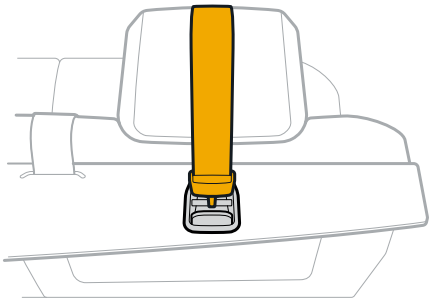

2. Run the vehicle's seat belt through the belt path as instructed by the child seat manufacturer instructions.

> **NOTE**
>
> If installing a seat base that accompanies an infant bucket seat, you may need to clip the seat belt in place with the belt lock off as directed by the seat manufacturer.

3. Insert the tongue plate of the seat belt into the buckle until it clicks.
4. Pull on the lap belt to take up the slack and ensure a tight fit.
5. Pull out the shoulder belt fully from the retractor and then allow the belt to retract. The seat belt locks into place as it retracts.
6. Push the child seat down and toward the back cushion of the vehicle seat, taking out as much slack from the seat belt as possible.

IMPORTANT

Install the child seat snugly so that its base at the belt path cannot move more than 1 in (2.5 cm) from side to side. Ensure that the seat is firmly secured before driving the vehicle.

Install a Child Seat with LATCH

LATCH (Lower Anchors and Tethers for Children) or ISOFIX is a child seat installation option that allows you to install child seats without using the vehicle's seat belts. Instead, the child seats are secured to dedicated anchorage points on the vehicle seats.

Only use the LATCH system to install child seats in accordance with the manufacturer recommendations, including considerations to the child's height and weight. Follow instructions on child seat spacing with LATCH installation. Don't use LATCH in addition to the seat belt installation method. For forward-facing installation, LATCH can provide more stability with the top tether anchorage since it has an additional connection point between the child seat and the vehicle.

IMPORTANT

In the second row of this vehicle, only the two outboard seats support LATCH installation. The middle seat supports child seats that can be restrained with the seat belt only. For additional stability, the top tether anchor may be used along with the seat belt to secure a forward-facing child seat.

The lower anchorages are located between the seat cushion and seat back, and are marked with this symbol:

The upper anchorages are located on the rear seat anchor trim directly behind the seats, and are marked with this symbol:

Install the Lower Anchorage Guide

This vehicle comes with sets of lower anchorage guides. These anchorage guides make the LATCH lower anchor points more visible and hold open the cushions, letting you use less force to clip on the child seat lower anchor attachments.

1. Find the two lower anchor markers corresponding to where you are installing the child seat. The lower anchor bars are located in between the seat cushion and seat back.
2. Grip the square frame of the anchorage guide on both sides and push the part onto the lower anchor bars until the guide sits securely in place. The flanged edges of the anchorage guide should sit flush against the seat back.

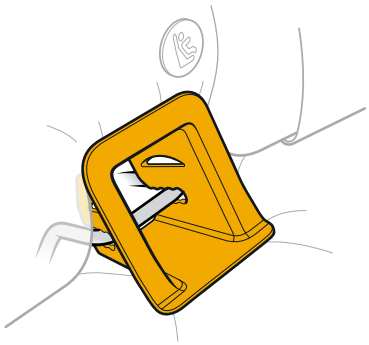

NOTES

- Ensure the anchorage guide is installed as shown, not upside down.
- To remove the anchorage guide, grip the square frame on both sides and pull it straight out.
- Remove the anchorage guide before folding or flipping the seat.

Install the Seat

1. Position the child seat between the two lower LATCH anchors (bars) corresponding to where you are installing the child seat.
2. Connect the lower anchor attachments of the child seat to the lower anchors (bars) located in between the seat cushion and seat back. Avoid twisting the LATCH straps or snagging the vehicle seat belt.

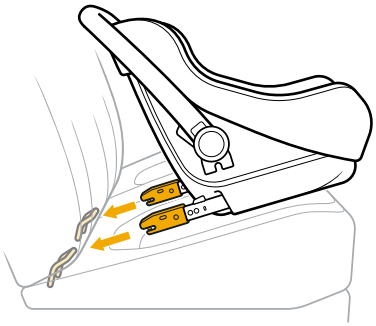

3. For a child seat with tether straps, pull on the tethers to remove any slack. Push the child seat into the bottom and back cushions of the vehicle seat for a tight fit.
4. Attach the top tether hook to the appropriate top tether anchor and tighten the belt to remove any slack.

LATCH Seat Configuration

The second-row seats come with three top tether anchors and four lower anchors (bars), two for each outboard seat.

IMPORTANT

When you install a child seat, ensure that the seat cushion is firmly in place, and not lifted to access the under-seat storage bin.

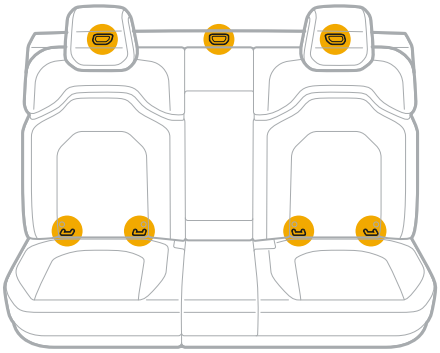

Single Tether

Route the top tether strap over the center of the head restraint.

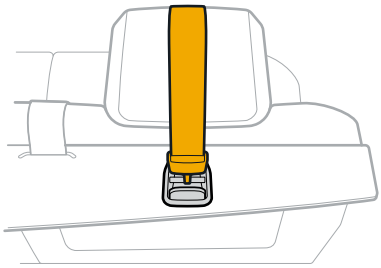

Double Tether

Route the two top tether straps to either side of the head restraint, wrapping the belts as close as possible to the head restraint without twisting them.

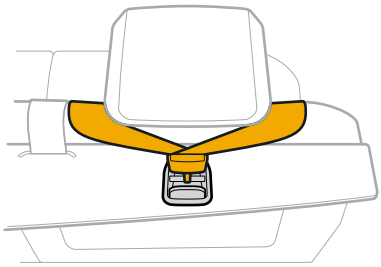

Install a Booster Seat

1. Position the booster seat in the front-facing position on the vehicle's seat and place the child with the back against the booster seat.
2. Run the vehicle's seat belt through or around the booster seat and the child in accordance with the instructions that come with the booster seat. Ensure that the seat belt isn't twisted or reversed.
3. Insert the tongue plate of the seat belt into the buckle until you hear a click.
4. Ensure that the shoulder belt rests over the child's shoulder without touching the child's neck and that the lap belt is as low as possible on the hips.

WARNING

Check the placement of the seat belt for a child in a child seat. In the event of a collision or sudden braking, a high-positioned lap belt may increase the risk of injury to the abdomen or allow the child to slide under the belt.

Don't allow a child to wear the shoulder belt under the arm or behind the back.

Remove a Secured Child Seat

1. Press the release button on the buckle.
2. Guide the seat belt out of the belt path of the child seat.
3. Allow the seat belt to fully retract to avoid any twists. The seat belt returns to normal function, and the locking mechanism deactivates after the seat belt returns to its fully retracted position.

> **NOTE**
> For child seats installed with LATCH, reverse the procedures of LATCH installation to remove the seat. See the child seat manufacturer's instructions for additional details.

Automatic Locking Retractor (ALR)

The Automatic Locking Retractor (ALR) causes the seat belt to lock when pulled out to its full length. ALR can be used to secure a child seat.

Activate ALR

1. Pull out the seat belt completely.
2. Retract the seat belt to the desired length to activate locking the seat belt in that position. Once locked, the seat belt cannot be extended further.

Cancel ALR

Restore the seat belt to normal function by unbuckling and retracting the seat belt fully. Cancel ALR when removing a child seat.

> **NOTE**
>
> ALRs are different from Emergency Locking Retractors (ELRs), which are designed to allow occupants to move freely once the seat belt is buckled, but lock up in the event of an accident. ALRs are only equipped on passenger seats.

Airbags

About Airbags

This vehicle is equipped with supplemental restraint system (SRS) airbags, designed to help protect the driver and passengers from injuries. The airbags supplement the crash protection provided by correctly fastened seat belts. The vehicle is equipped with airbags and shoulder and lap seat belts for the driver and passengers.

The supplemental airbags are not a substitute for wearing seat belts. All occupants, including the driver, should wear their seat belts. Failure to use seat belts increases the risk of severe injury or death in the event of a crash.

The airbags don't require routine maintenance. If it is necessary to modify the airbag system for a person with disabilities, contact Rivian. The modification may affect the function of the advanced airbag system.

How Airbags Work

The airbag system sensors predict the severity of a crash when the crash conditions reach a certain threshold. When the threshold is reached, the specific restraints will deploy. If there is significant vehicle deceleration, the airbags deploy instantly with a loud sound.

Not all collisions deploy the airbags. For example, certain low severity collisions and rear collisions don't deploy the airbags.

The front passenger seat has an Occupant Classification System that determines whether the seat is occupied. Under certain conditions, it deactivates the airbag.

Airbag Status

Before you drive the vehicle, the **Airbag Status** indicator appears in the driver display for a few seconds during the initial function check when you start the vehicle. After the function check, the Airbag Status indicator turns off. The components in the safety system monitored by the indicator are as follows:

- First-row driver and passenger airbags, designed to work with seat belts
- First-row seat belts with pretensioner and seat belt usage sensors
- Seat belts with pretensioners in the second-row outboard seating positions
- Driver seat position sensor
- First-row driver and passenger knee airbags
- First-row side airbag
- First- and second-row roof rail airbags
- First-row passenger occupant classification system
- Front crash sensors
- Side and rollover crash sensors
- Restraints control module
- Restraints warning lamp and tone
- High-voltage disconnect
- Electrical wiring that interfaces with the airbag sensor, seat belts, pretensioners, and high-voltage system
- Chassis stability control sensors

If the airbag system has a fault, the Airbag Status indicator remains on. Contact Rivian for repair.

Airbag Locations

Airbag inflators are positioned around passengers in the cabin.

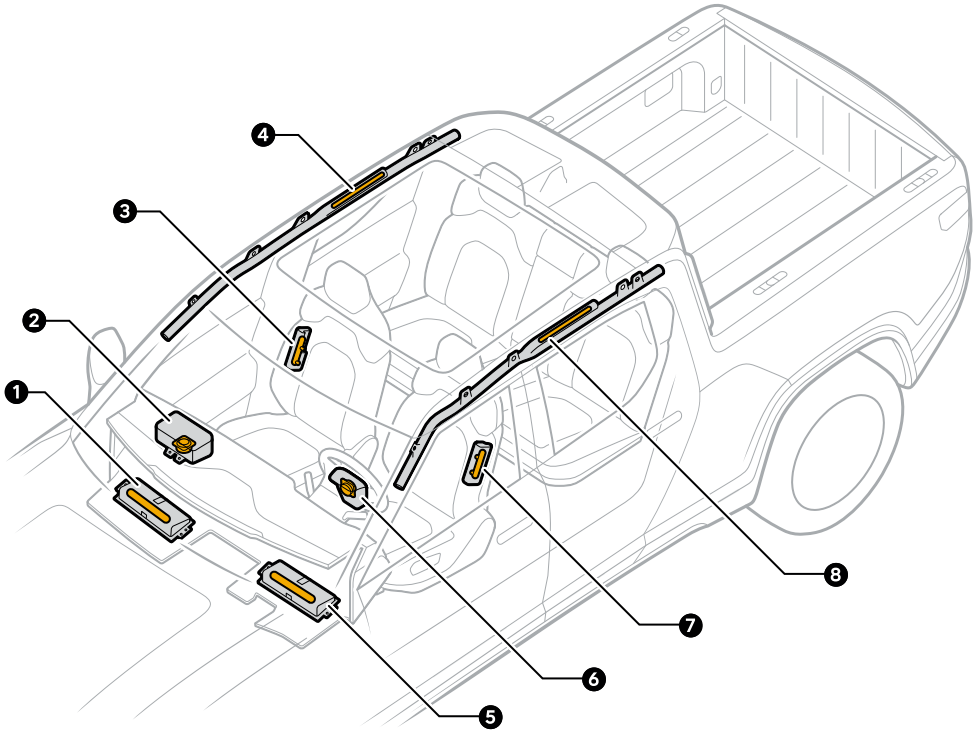

Airbag Inflator	Description
1	Front passenger knee airbag inflator
2	Front passenger airbag inflator
3	Side airbag inflator
4	Roof rail airbag inflator
5	Driver knee airbag inflator
6	Driver airbag inflator
7	Side airbag inflator
8	Roof rail airbag inflator

Airbag Functions

The driver and passenger airbags perform the following functions:

Location	Function
Driver and front passenger airbags	In frontal crashes and crashes with frontal deceleration, the driver and front passenger airbags help protect the front occupants from frontal impacts and other directional impacts.
Driver and front passenger knee airbags	The knee airbags work with the driver and front passenger airbags to help protect the lower extremities of the driver and front passenger. The knee airbags also help position the driver and passenger to improve the effectiveness of the front airbags.
Roof rail airbags	The roof rail airbags inflate along the side windows to help protect the driver and passengers from a significant side impact, certain front impacts, rollover, or near-rollover accidents. The roof rail airbags inflate from the roof rail between the front and rear seats.
Side airbags	The side airbags inflate from the sides of the driver and front passenger seats. These airbags may help prevent injury from side impact and some frontal impacts.

Warnings

Maintain Distance from Side and Roof Rail Airbags

DANGER

Passengers, including children, should not lean against or sleep on the side windows or doors, even if they are in a child restraint. The roof rail and side airbags need room to inflate and could cause severe injury or death if passengers are too close to the airbags. Always wear seat belts, even though you have roof rail and side airbags.

Maintain Proper Positioning

DANGER

- Maintain a distance of at least 10 in (25 cm) between the driver's chest and the driver's airbag, as recommended by the National Highway Traffic Safety Administration (NHTSA).
- Never place a rear-facing child seat in front of an active airbag. The safest place for children 12 years old and under is in the rear seats in a suitable child restraint.

Objects Can Interfere with Airbags

DANGER

- Don't place objects on or near the airbags. Objects in front of the airbags can cause serious injury if the airbags deploy in a severe collision.
- Don't mount equipment or place objects along the interior headliner or on the vertical pillars near the seat belts. Such objects may prevent the side or roof rail airbags from deploying in a severe collision.
- Don't install seat covers. Seat covers could prevent the side airbags from inflating.

Front Passenger Airbag

About the Front Passenger Airbag

Your vehicle is equipped with an Occupant Classification System (OCS) in the front passenger seat.

The OCS is an electronic system designed to determine whether the front passenger seat is unoccupied, occupied by a child, or occupied by an adult—and then determine whether the front passenger airbag should be enabled. The purpose is to reduce the risk of injury or death caused by an inflating airbag to a child seated in the front passenger seat.

If a child is seated in the front passenger seat (with or without a child restraint), the OCS will detect the child and deactivate the front passenger airbag. Rivian highly recommends that all children 12 years old and younger be properly restrained in a rear seat. See Children in Rear Seats.

Adult occupants properly seated in the front passenger seat should not cause the OCS to deactivate the front passenger airbag. However, for smaller adult occupants, the OCS may deactivate the front passenger airbag if the occupant does not sit properly (for example, by not sitting upright, by sitting on the edge of the seat, or by otherwise being out of position). See Proper Sitting Positions. Always ensure that you and all vehicle occupants are properly seated and belted.

Front Passenger Airbag Status

The status of the front passenger airbag is conveyed by a status indicator that illuminates on the center display. The Passenger Airbag Off indicator consists of an icon and the words "PASSENGER AIRBAG OFF."

PASSENGER AIRBAG OFF

- If the Passenger Airbag Off indicator is turned on (illuminated), then the front passenger airbag system is deactivated.
- If the Passenger Airbag Off indicator is turned off (not illuminated), then the front passenger airbag system is active.

The Occupant Classification System (OCS) is designed to deactivate the front passenger airbag under these conditions:

- The front passenger seat is unoccupied.
- The front passenger seat is occupied by a child (with or without a child restraint).
- The front passenger takes their weight off the seat for a period of time.
- There are only lightweight objects on the front passenger seat.
- There is a problem with the airbag system or OCS.

If any of the above conditions are present, the front passenger airbag system is deactivated.

Occupancy Detection

To ensure that the Occupant Classification System (OCS) is properly classifying the front seat occupant, the occupant must:

- Sit upright on the center of the seat cushion, with shoulders and back resting against the seat back, and with legs comfortably extended on the floor.
- Remain seated on the center of the seat cushion for the duration of the trip.

The OCS may not classify the front seat occupant properly if the occupant does any of the following:

- Fails to sit in an upright position.
- Leans against the door or center console.
- Sits toward the front edge of the seat.
- Puts their legs and feet on the dashboard.
- Pulls the seat belt all the way out activating the Automatic Locking Retractor (ALR).

If an occupant of adult size is sitting in the front passenger seat, but the Passenger Airbag Off indicator on the center display is turned on (illuminated), it is possible that the occupant is not sitting properly in the seat. If this happens:

- Have the occupant sit upright on the center of the seat cushion, with shoulders and back resting against the seat back, and with legs comfortably extended on the floor.
- It takes approximately 8 seconds after sitting in the seat for the OCS to accurately report the status of the front passenger airbag on the center display. After 8 seconds, if the airbag status is still incorrect, instruct your passenger to sit properly in the rear seats. Do not allow an occupant to sit in the front passenger seat. Contact Rivian immediately to have the airbag system checked.

Certain conditions can also interfere with the accuracy of the OCS. To ensure that the OCS is properly classifying the front seat occupant, eliminate the following:

- Objects under the seat.
- Heavy objects placed on the seat (luggage, briefcase, large purse, or groceries).
- Objects wedged between the seat back and seat cushion.
- Objects wedged between the seat cushion and center console.
- Heavy objects on the occupant's lap.
- Car seat accessories like seat covers, cushions, heavy blankets, or massagers on the seat structure.

These conditions can interfere with the OCS. If you have eliminated the above conditions, and the airbag status is still incorrect, instruct your passenger to sit properly in the rear seats. Do not allow an occupant to sit in the front passenger seat. Contact Rivian immediately to have the airbag system checked.

Proper Sitting Position

It is critical that vehicle occupants sit properly in their seat. Occupants should sit upright on the center of the seat cushion, with their shoulders and back resting against the seat back, and with their legs comfortably extended on the floor. Follow the proper seating instructions below. Failure to do so can result in serious injury or death.

Correct

Sitting improperly can increase the risk of injury or death, even in low-speed collisions. For example, if an occupant sits out of position on the front edge of the seat cushion, turns sideways, or puts one or two feet on the dashboard, the chance of injury during a crash greatly increases.

Incorrect

DANGER

- Follow the proper seating instructions above. Failure to do so can interfere with the accuracy of the Occupant Classification System (OCS) and result in serious injury or death.
- The status of the front passenger airbag is shown by the indicator light located on the center display. If the airbag status is incorrect, instruct your passenger to sit properly in the rear seats. Do not allow an occupant to sit in the front passenger seat. Contact Rivian immediately to have the airbag system checked. Failure to do so can result in serious injury or death to the occupant.
- Do not make any modifications or alternations to the front passenger seat. Doing so can interfere with the accuracy of the OCS and result in serious injury or death.

Children in Rear Seats

Although your vehicle is equipped with an Occupant Classification System (OCS), both the National Highway Traffic Safety Administration and Rivian highly recommend that all children 12 years old and younger be properly restrained in a rear seat. Doing so reduces the risk of injury or death caused by an inflating airbag to a child seated in the front passenger seat.

It is illegal in many jurisdictions to let a child sit in the front passenger seat. If seating a child in the front passenger seat is legal in your jurisdiction, it is the driver's responsibility to ensure that the front passenger airbag is deactivated. When deactivated, the Passenger Airbag Off indicator turns on (illuminates). Failure to do so can result in serious injury or death to the child.

If you have installed a child restraint in the front passenger seat, and the Passenger Airbag Off indicator is turned off (not illuminated), remove and reinstall the child restraint from the seat following the manufacturer's instructions. Failure to do so can result in serious injury or death to the child.

DANGER

- Although your vehicle is equipped with an OCS, both the National Highway Traffic Safety Administration and Rivian highly recommend that all children 12 years old and younger be properly restrained in a rear seat. Failure to do so can result in injury or death caused by an inflating airbag to a child seated in the front passenger seat.
- Never place a rear-facing child seat in front of an active airbag. Doing so can result in serious injury or death to the child. The safest place for children 12 years old and under in is the rear seats in a suitable child restraint.

Deployed Airbags

You won't be able to drive the vehicle after airbags are deployed or if the vehicle has been in a severe rear crash. An internal safety device automatically shuts off the high-voltage system when the airbags deploy. The vehicle will need to be towed to a repair shop and then repaired to drivable condition.

NOTE

The vehicle has a roof rail airbag on both the driver side and passenger side. The roof rail airbag deploys during certain front or side crashes, or when the rollover sensor predicts a near-rollover or rollover accident. If a front or roof rail airbag deploys, the **Airbag Malfunction** indicator lights up in the driver display. Contact Rivian to have the vehicle serviced.

WARNING

Some airbag system components, such as inflators, may be hot after airbags deploy. To reduce the risk of injury, don't touch the airbag system components after they inflate.

Cameras

Camera Views

Cameras help you avoid obstacles, see what's around the vehicle, and park better. Use the Cameras app to view live feeds from the cameras on your vehicle.

From the app tray, choose **Camera** on the center display.

The vehicle has the following views:

- Front view
- Side view
- Rear view
- Top view
- Truck bed view

Icon	Description
	Displays the front view.
	Displays the left and right side views.
	Displays the rear view.
	Displays the top view.
	Displays the truck bed view.

DANGER

Don't rely solely on digital displays to detect obstacles, as technical limitations or lens obstructions can create dangerous blind spots.

- Be aware that the camera feed may be slightly delayed compared with real-time conditions, so objects could appear on the display later than they appear on the road.
- Always remain attentive to your surroundings.
- Keep your eyes on the road, as camera features are intended to assist and not replace active driver awareness.

Mirrors

Side Mirrors

Adjust the Side Mirrors

1. Go to your driver profile on the center display.
2. Choose **Side mirrors**.
3. Use the thumb controls and buttons on the left side of the steering wheel to adjust the driver-side mirror. Use the controls on the right side of the steering wheel to adjust the passenger-side mirror.
4. Choose **Remember** to save the settings. After you save the settings to your driver profile, the side mirrors will automatically adjust when you unlock the vehicle from the outside.

NOTE

The image below displays the controls for the passenger-side mirror only.

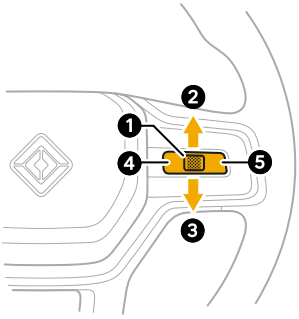

Item	Control	Function
1	Thumb control	Tilt mirror up or down
2	Thumb control up	Tilt mirror up
3	Thumb control down	Tilt mirror down
4	Left thumb control button	Move mirror left
5	Right thumb control button	Move mirror right

Automatically Fold the Side Mirrors

When automatic mirror folding is enabled, the side mirrors fold when the vehicle locks with an external key and unfold when the vehicle unlocks with an external key. To enable it:

1. Go to **Settings** ⚙ **> Mirrors and steering wheel** on the center display.
2. Choose **Auto mirror folding**.

NOTES

- In below freezing temperatures, it's possible for side mirrors to freeze in the folded position. To prevent this, disable automatic mirror folding when freezing conditions are expected.
- Side mirrors automatically unfold if you drive above 15 mph (25 km) even if automatic unfolding is disabled.

Fold Side Mirrors on Demand

1. Choose **Vehicle** on the center display, or swipe in from the left or right edge of the screen to show the panel.
2. Choose fold mirror to fold the mirror. Choose it again to unfold.

Manually Fold the Side Mirrors

If automatic mirror folding is turned on, but you want to control mirror behavior manually in situations such as tight parking spaces or driving off-road, first turn off the auto fold feature. To do this:

1. Go to **Settings** ⚙ **> Mirrors and steering wheel** on the center display.
2. Turn off **Auto mirror folding**.

CAUTION

To avoid damage to the side mirrors, ensure that the automatic fold and unfold option is turned off if you park the vehicle in a tight space. If the side mirror automatic unfold feature is turned on, the side mirrors unfold automatically when you approach the vehicle with a key.

Side Mirror Auto-Tilt in Reverse

Use side mirror auto-tilt to provide better side mirror views of surroundings and curbs when you parallel park the vehicle or back it into a spot. This feature is disabled by default. To enable it:

1. Go to **Settings** ⚙ **> Mirrors and steering wheel** on the center display.
2. Turn on **Side mirror auto-tilting**.

With the feature enabled, both the driver and passenger side mirrors tilt when you shift the vehicle into **R** (Reverse). After you park the vehicle and shift it out of reverse, the side mirrors return to their normal drive position.

Customize the Side Mirror Auto-Tilt Positions

1. Go to **Settings** ⚙ **> Mirrors and steering wheel** on the center display.
2. Under **Side mirror auto-tilting**, choose **Customize**. The mirrors move into the default factory tilt position, or if you customized in the past, into the last saved tilt position.
3. Use the thumb controls on the steering wheel to adjust the mirrors.
4. Choose **Remember** to save the new settings to your driver profile.

To return the side mirror auto-tilt settings to the factory default, choose **Restore**.

Cancel Side Mirror Auto-Tilt in Reverse

To cancel side mirror auto-tilt when the vehicle is in reverse, press the left thumb button on the right side of the steering wheel. If you need to cancel it when you are near a garage associated with the vehicle:

1. Scroll the thumbwheel on the right side of the steering wheel downward until you see the side mirror indicator on the driver display.
2. Press the left thumb button on the right side of the steering wheel to cancel.

Autodimming

Autodimming automatically dims the driver side mirror at night in response to ambient lighting sensors in the rearview mirror (for example, when bright headlights shine from a vehicle behind you).

1. Go to **Settings** ⚙ **> Mirrors and steering wheel** on the center display.
2. Choose **Rearview and sideview mirror autodimming**.

> **NOTES**
> - The side mirror doesn't dim when the vehicle is in **R** (Reverse) or **P** (Park).
> - In some vehicles, the passenger side mirror also dims automatically.

Defrost

Use the climate control system to defrost the side mirrors.

Rearview Mirror

- Position the rearview mirror by adjusting it manually.
- The mirror dims automatically based on the ambient lighting. It does not dim when the car is in **P** (Park) or **R** (Reverse).

CAUTION

Don't spray liquid directly onto the rearview mirror. The electronics inside shouldn't get wet. To clean the mirror, spray cleaning liquid on a cloth and wipe the mirror.

Windows

Open or Close Windows

Using the Window Switches

- To partially open or close a window, push or pull the window switch to the first notch.
- To express open a window, push the window switch down past the second notch and release.
- To express close a window, pull the window switch up past the second notch and release.
- To pause a window while it's in motion, push or pull the window switch.

NOTES

- When a window detects an obstacle while it's trying to express open or close, it partially reverses.
- If a window doesn't fully express close, or an error appears that says a window needs calibration, reset the window. To temporarily force close a window if it doesn't express close completely:
  1. Push the window switch down to the first notch and hold it until the window opens all the way.
  2. Pull the switch up to the first notch and hold it until the window closes all the way.

Using the Key Fob

- Press, release, then press and hold the unlock button to open all the windows.
- Press, release, then press and hold the lock button to engage all locks and close all of the windows.

Lock or Unlock Passenger Windows

To lock or unlock both rear passenger windows:

1. Choose **Vehicle** in the top status bar of the center display.
2. In the Access panel, choose **Shortcuts** in the upper right.
3. Choose **Window Locks**.
   a. The setting locks both rear passenger windows (default).
   b. The ON: REAR indicator appears.
   c. Window Locks highlights to indicate the setting is ON.

To customize the setting and lock one or more passenger windows, including the front passenger window:

1. Choose **Edit** to the right of Window Locks in the Shortcuts menu.
2. On the vehicle image in the Edit Window Locks panel, select the passenger window(s) to lock or unlock.
   - An open lock icon indicates the passenger window lock is set to OFF.
   - A closed lock icon indicates the passenger window lock is set to ON.
3. Choose **Done**.
   a. The setting locks the selected passenger windows.
   b. If all windows are set to lock, the ON: ALL PASSENGER indicator appears on Window Locks in the Shortcuts menu.
   c. If one of the three windows, or one rear and the front window are set to lock, the ON: CUSTOM indicator appears on Window Locks in the Shortcuts menu.

To turn off passenger window locking, choose **Window Locks**. The Window Locks button deselects to indicate the setting is OFF.

NOTES

- Locking a passenger window disables the window switch on the passenger door. It does not disable the switch for that window on the driver door.
- Window Locks remembers the previous setting on vehicle start-up.
- To clear custom settings, in the Edit Window Locks panel, deselect all windows. The next time you turn on Window Locks, the setting returns to the default, locking both rear passenger windows.

Sun Visors

Adjust the sun visors in the following ways:

- Flip up or down
- Rotate outward or inward
- Telescope or slide

With the sun visor in the down position, flip open the cover to use the illuminated vanity mirror.

Toll Devices

To determine where to place a toll device—such as a sticker or transponder—in the vehicle, follow instructions provided by the toll collection company.

> **NOTE**
> Placing a toll device on the interior of the windshield behind the rearview mirror does not interfere with the sensor for the garage door opener.

Tires and Wheels

Tire Pressure and Tire Care

Check the inflation pressure of the tires, including the spare tire (if equipped), monthly with an accurate tire pressure gauge. The recommended cold inflation pressures are listed on the Tire and Loading Information label on the driver door pillar.

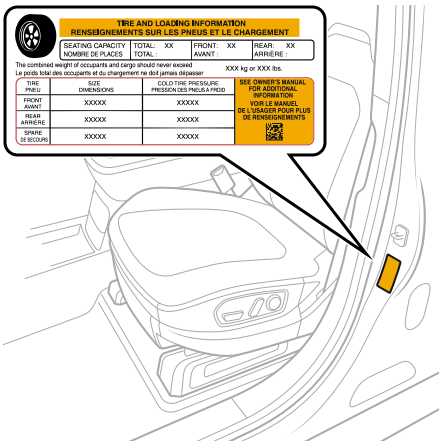

NOTES

- View the tire pressures on the driver display. On the left side of the steering wheel, long-press either thumb control button to cycle through the efficiency graph, tire pressure displays, and navigation map.
- Inflate the tires with the optional onboard air compressor.
- Use the tire mobility kit or optional spare tire if you need to seal or change a flat tire.

Tire Mobility Kit and Spare Tire

Vehicles that don't have a spare tire included or the off-road package come with a tire mobility kit.

Certain vehicles come with a full-size spare tire, a jack, and other service tools.

Wheel Size	Tire Size
20 in	275/65R20
20 in	275/60R20
22 in	HL275/50R22
22 in	305/45R22*

* Only available on some vehicle variants.

DANGER

When mounted on the rear axle, the 22" Super Sport full-size spare is only intended for use in roadside emergencies. Replace the full-size spare as soon as possible to avoid handling and stability risks if mounted on the rear axle. When mounted on the front axle, the 22" Super Sport full-size spare may be used as a full replacement tire.

Load Capacity

The Tire and Loading Information label is on the driver door pillar. The label describes the proper loading for the vehicle with or without a trailer.

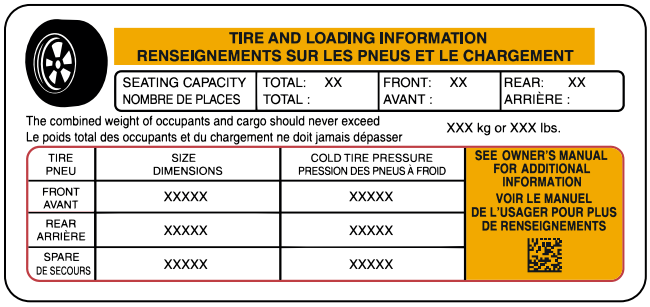

Steps for Determining the Correct Load Limit

1. Locate the statement "The combined weight of occupants and cargo should never exceed XXX kg or XXX lbs" on your vehicle's placard.
2. Determine the combined weight of the driver and passengers that will be riding in your vehicle.
3. Subtract the combined weight of the driver and passengers from XXX kg or XXX lbs.
4. The resulting figure equals the available amount of cargo and luggage load capacity. For example, if the "XXX" amount equals 1,400 lbs (635 kg) and there are five 150 lb (68 kg) passengers in your vehicle, the available cargo and luggage load capacity is 650 lbs (1400-750 (5 x 150) = 650 lbs) or 295 kg (635-340 (5 x 68) = 295 kg).
5. Determine the combined weight of luggage and cargo being loaded on the vehicle. That weight may not safely exceed the available cargo and luggage load capacity calculated in Step 4.
6. If your vehicle will be towing a trailer, load from your trailer will be transferred to your vehicle. Consult this manual to determine how this reduces the available cargo and luggage load capacity of your vehicle.

WARNING

- Don't overload the tires. Overloading can cause tire failure, affect vehicle handling, and increase stopping distance.
- This vehicle is not designed to carry a slide-in camper.

NOTES

- Trailer loads transfer to the vehicle. You must include the trailer load when calculating cargo capacity.
- The R1T Dual with Standard or Large battery packs (Model Year 2025-2026) and R1T Premium (Model Year 2027) can tow up to 7,700 lbs (3,492 kg) using a weight distributing hitch, and up to 5,000 lbs (2,267 kg) using a standard hitch. The R1T Quad, R1T Tri, or R1T Dual with Max battery packs (Model Year 2025-2026) and R1T Quad, R1T Performance, and R1T Premium Long-Range (Model Year 2027) can tow up to 11,000 lbs (4,989 kg) using a weight distributing hitch, and up to 5,000 lbs (2,267 kg) using a standard hitch.
- For the Gross Vehicle Weight Rating (GVWR) of the R1T, see the Certification Label on the B-pillar lower door jamb.

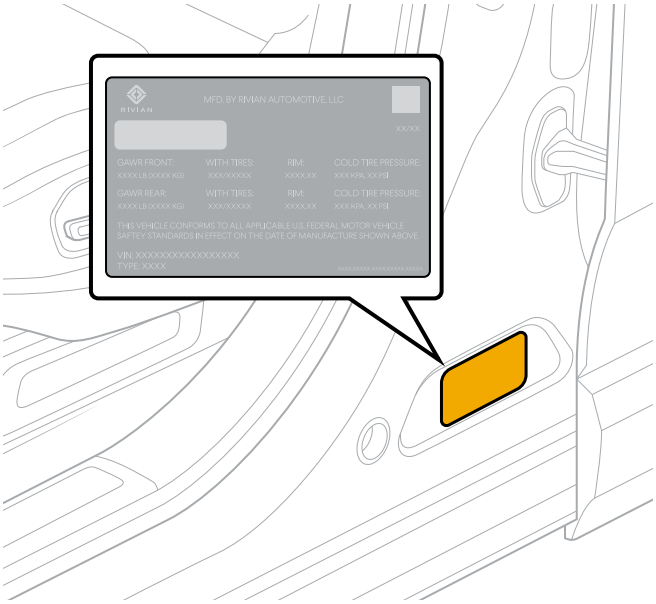
RIVIAN
MFD. BY RIVIAN AUTOMOTIVE, LLC
XX/XX
GAWR FRONT:
XXXX LB (XXXX KG)
WITH TIRES:
XXX/XXXXX
RIM:
XXXX.XX
COLD TIRE PRESSURE:
XXX KPA, XX PSI
GAWR REAR:
XXXX LB (XXXX KG)
WITH TIRES:
XXX/XXXXX
RIM:
XXXX.XX
COLD TIRE PRESSURE:
XXX KPA, XX PSI
THIS VEHICLE CONFORMS TO ALL APPLICABLE U.S. FEDERAL MOTOR VEHICLE SAFTEY STANDARDS IN EFFECT ON THE DATE OF MANUFACTURE SHOWN ABOVE.
VIN: XXXXXXXXXXXXXXXXXX
TYPE: XXXX
XXXX.XXXX.XXXX.XXXX.XXXX

Uniform Tire Quality Grading

Quality grades can be found where applicable on the tire sidewall between tread shoulder and maximum section width. For example: Treadwear 200 Traction AA Temperature A. The U.S. Department of Transportation requires the following information.

Treadwear

The treadwear grade is a comparative rating based on the wear rate of the tire when tested under controlled conditions on a specified government test course. For example, a tire graded 150 would wear under one-and-one-half (1½) times as well on the government course as a tire graded 100. The relative performance of tires depends upon the actual conditions of their use, however, and may depart significantly from the norm due to variations in driving habits, service practices, and differences in road characteristics and climate.

Traction

The traction grades, from highest to lowest, are AA, A, B, and C. Those grades represent the tire's ability to stop on wet pavement as measured under controlled conditions on specified government test surfaces of asphalt and concrete. A tire marked C may have poor traction performance.

WARNING

The traction grade assigned to this tire is based on straight-ahead braking traction tests, and does not include acceleration, cornering, hydroplaning, or peak traction characteristics.

Temperature

The temperature grades are A (the highest), B, and C, representing the tire's resistance to the generation of heat and its ability to dissipate heat when tested under controlled conditions on a specified indoor laboratory test wheel. Sustained high temperature can cause the material of the tire to degenerate and reduce tire life, and excessive temperature can lead to sudden tire failure.

The grade C corresponds to a level of performance which all passenger car tires must meet under the Federal Motor Vehicle Safety Standard No. 109. Grades B and A represent higher levels of performance on the laboratory test wheel than the minimum required by law.

WARNING

The temperature grade for this tire is established for a tire that is properly inflated and not overloaded. Excessive speed, underinflation, or excessive loading, either separately or in combination, can cause heat buildup and possible tire failure.

Snow Traction Devices

If you drive in a location that requires snow traction devices, refer to the following table for the appropriate snow traction device for your tire size.

Rivian recommends this snow tire for 22-inch wheels: Nokian Hakkapeliitta R5 SUV 275/50R22.

Tire Size	Snow Traction Device
275/65R20	Only use government-approved textile-based snow traction devices on the 275/65R20 tires. **CAUTION** Don't use snow chains or cables on the 275/65R20 tires. Metal snow traction devices can damage the vehicle body. Damage caused by snow traction devices is not covered by the New Vehicle Limited Warranty.
275/50R22 275/60R20	• Use low profile (16 mm or smaller) snow cables. • Install the low profile cables on the rear tires. • Ensure the vehicle is in a four-wheel drive mode such as Snow mode.
305/45R22	**CAUTION** Don't use snow socks, snow chains, or cables on the 305/45R22 tires. Metal snow traction devices can damage the vehicle body. Damage caused by snow traction devices is not covered by the New Vehicle Limited Warranty.

CAUTION

Summer tires (tires that do not have both M+S and 3PMS markings) are not recommended for use in winter conditions, with snow traction devices, or at temperatures below 40°F (4°C).

Tire Markings

The following image describes tire markings for a typical tire. The positions of the tire markings may vary by tire manufacturer.

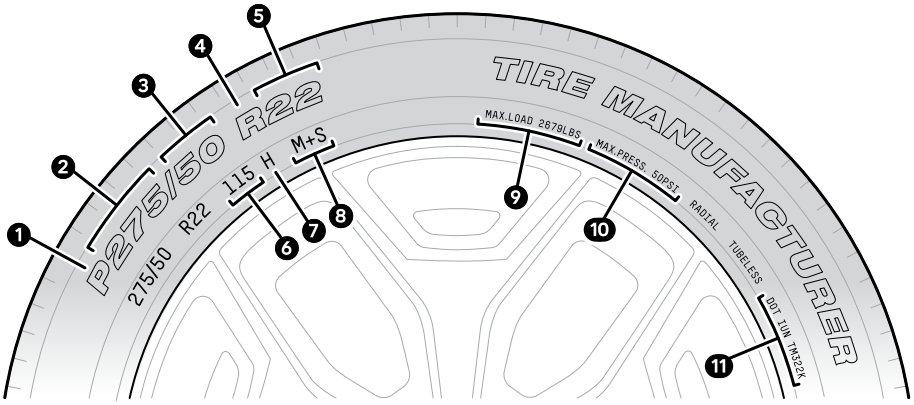

Item	Description
1	Tire type. A "P" marking indicates a passenger tire. An "HL" marking indicates a high load capacity tire.
2	Nominal width in millimeters, measured from the outer edges of the sidewall.
3	Nominal aspect ratio (%). This describes the height of the tire expressed as a percentage of the tire width.
4	Internal construction. The "R" indicates a radial ply tire.
5	Rim diameter in inches
6	Load index
7	Speed symbol
8	Mud and snow grading
9	Maximum load rating
10	Maximum permissible inflation pressure
11	US DOT tire identification number

Glossary of Tire Terminology

Term	Definition
Accessory weight	The combined weight of factory-installed equipment (in excess of standard items that may be replaced).
Bead	The part of the tire next to the rim, constructed of steel wires that are wrapped or reinforced by ply cords.
Bead separation	A breakdown of the bond between bead components.
Bias ply tire	A pneumatic tire constructed of ply cords laid at alternate angles that are substantially less than 90 degrees to the tread centerline.
Carcass	The tire structure, except the tread and sidewall rubber, which bears the load when inflated.
Chunking	The breaking away of pieces of the tread or the sidewall.
Cold tire pressure	The tire pressure when the vehicle has been parked for 3 hours or more, or driven for less than 1 mi (1.6 km).
Cord	The strands that form the plies in the tire.
Cord separation	The parting of cords between adjacent rubber compounds.
Curb weight	The weight of the vehicle with standard equipment and properly filled fluids.
Groove	The space between two adjacent tire tread ribs.
Inner liner	The layers that form the inside surface of a tubeless tire containing the inflating medium.
Inner liner separation	The parting of the inner liner from the cord material in the tire carcass.
Light truck (LT) tire	A tire that a manufacturer designates for use in lightweight trucks or multipurpose passenger vehicles.
Load rating	The maximum load for a tire at the maximum permissible inflation pressure.
Maximum inflation pressure	The maximum permissible cold tire inflation pressure.
Maximum load rating	The load rating for a tire at the maximum permissible cold tire inflation pressure.

Term	Definition
Passenger car tire	A tire intended for use on passenger vehicles and trucks that have a gross vehicle weight rating (GVWR) of less than 10,000 lbs (4,356 kgs).
Ply	A layer of rubber-coated parallel cords.
Ply separation	A parting of the rubber compound between adjacent tire plies.
Pneumatic tire	A mechanical device constructed of rubber, chemicals, fabric, steel, and other materials. When mounted on an automotive wheel, the device provides traction and contains the gas or fluid that sustains the load of the vehicle.
Radial ply tire	A pneumatic tire that contains ply cords that extend to the beads and are laid at alternate angles substantially less than 90 degrees to the tread centerline.
Recommended inflation pressure	The cold tire inflation pressure recommended by Rivian. This information is printed on the tire placard on the inside of the door pillar.
Rim	The metal support for a tire assembly where the tire beads are seated.
Section width	The linear distance between the exteriors of the sidewall of an inflated tire. The distance excludes elevations from labeling, decoration, or protective bands.
Sidewall	The section of the tire between the tread and the bead.
Tire placard	The label that is permanently attached to the inside of the door pillar that describes the original equipment tire sizes, recommended inflation pressures, and loading capacity.
Tread	The section of the tire that contacts the road surface.
Treadwear indicators (TWI)	The projections within the tire grooves that are designed to provide a visual indication of the tire tread wear.
Vehicle maximum load on the tire	The load on an individual tire that is determined by distributing the maximum loaded vehicle weight on each axle and dividing by two.

Tire Pressure Monitoring System

The vehicle is equipped with a Tire Pressure Monitoring System (TPMS) with individual tire pressure display. If one of the tires is significantly under-inflated, a low tire pressure indicator appears on the driver display.

Each tire, including the spare (if provided), should be checked monthly when cold and inflated to the inflation pressure recommended by the vehicle manufacturer on the vehicle placard or tire inflation pressure label. (If your vehicle has tires of a different size than the size indicated on the vehicle placard or tire inflation pressure label, you should determine the proper tire inflation pressure for those tires.)

As an added safety feature, your vehicle has been equipped with a Tire Pressure Monitoring System (TPMS) that illuminates a low tire pressure telltale when one or more of your tires is significantly under-inflated.

Accordingly, when the low tire pressure telltale illuminates, you should stop and check your tires as soon as possible, and inflate them to the proper pressure.

Driving on a significantly under-inflated tire causes the tire to overheat and can lead to tire failure. Under-inflation also reduces fuel efficiency and tire tread life, and may affect the vehicle's handling and stopping ability.

> **NOTE**
>
> The TPMS is not a substitute for proper tire maintenance, and it is the driver's responsibility to maintain correct tire pressure, even if under-inflation has not reached the level to trigger illumination of the TPMS low tire pressure telltale.

TPMS Malfunction Indicator

Your vehicle has also been equipped with a TPMS malfunction indicator to indicate when the system is not operating properly. The TPMS malfunction indicator is combined with the low tire pressure telltale. When the system detects a malfunction, the telltale will flash for approximately one minute and then remain continuously illuminated. This sequence will continue upon subsequent vehicle start-ups as long as the malfunction exists.

When the malfunction indicator is illuminated, the system may not be able to detect or signal low tire pressure as intended. TPMS malfunctions may occur for a variety of reasons, including the installation of replacement or alternate tires or wheels on the vehicle that prevent the TPMS from functioning properly. Always check the TPMS malfunction telltale after replacing one or more tires or wheels on your vehicle to ensure that the replacement or alternate tires and wheels allow the TPMS to continue to function properly.

TPMS Sensor Automatic Learning Process

The vehicle is equipped with TPMS sensors in the valve stem of each wheel. When you start driving, the sensors automatically connect to the TPMS module and begin the automatic learning process, which takes less than 10 minutes. After the learning process finishes, the TPMS sensor transmits the pressure values for each of the front and rear tires to the in-vehicle displays.

Spare Tire TPMS Sensor

The full-size spare tire (if equipped) has a TPMS sensor that remains passive until you install the full-size spare as a driving wheel. After installing the full-size spare tire, you may have to drive for up to 10 minutes to allow the TPMS sensor to complete the automatic learning process.

The compact spare tire (if equipped) doesn't have a TPMS sensor and does not display tire pressure.

NOTES

- To avoid damage to the TPMS sensor, replace the valve stem cap to keep dirt away from the valve and sensor.
- If the tire is warm, fill the tire to 4 psi (27 kPa) above the recommended cold tire placard pressure because the tire pressure decreases when the tire cools. The low pressure warning is not active if the tire is warm and the pressure is above the cold tire placard pressure value.
- You may have to drive above 19 mph (30 km/h) for up to 10 minutes before the vehicle displays a pressure.

DANGER

An under-inflated tire may fail, which could cause a sudden loss of vehicle control that may result in personal injury or death.

CAUTION

- Don't use the Tire Pressure Monitoring System as a pressure gauge when you fill the tires.
- The Tire Pressure Monitoring System isn't designed for aftermarket wheels.
- If you replace the tires, use the same size and style as the tires provided by Rivian.

Remove the Aerodynamic Wheel Cover

WARNING

The brake calipers may be hot after you drive the vehicle. To avoid burns, remove the aerodynamic wheel covers when the wheels and brakes are cool.

Follow these steps to remove the aerodynamic wheel cover.

1. Put your hand into the valve stem opening of the wheel cover and pull the cover away from the wheel.

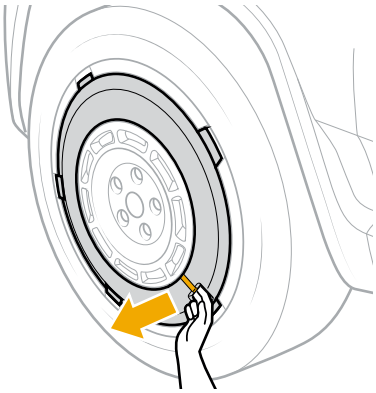

2. Put your hand under the closest tab and pull up firmly. Move to the next tab, pull up on the cover, and continue around the wheel until the cover is removed.

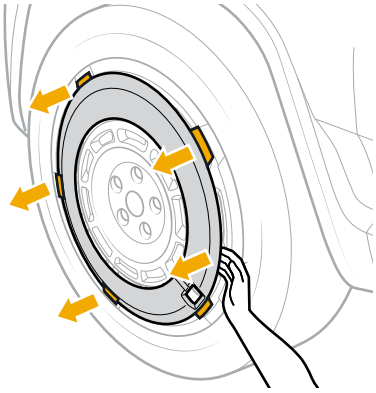

3. To reinstall the aerodynamic wheel cover, place the cover on the wheel and press firmly to secure it.

   NOTE

   Be sure to press between the tabs, not on them.

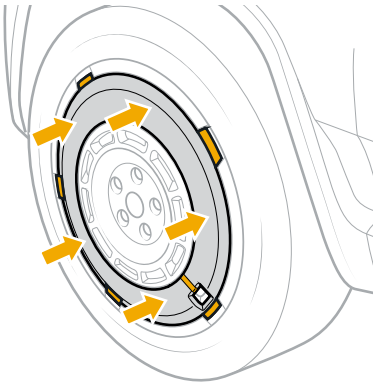

Climate

Cabin Climate Control

About Climate Control

The vehicle offers three climate zones in the cabin:

- Driver seat
- Front passenger seat
- Rear passenger seats

Control the climate for each zone with buttons at the bottom of the center display.

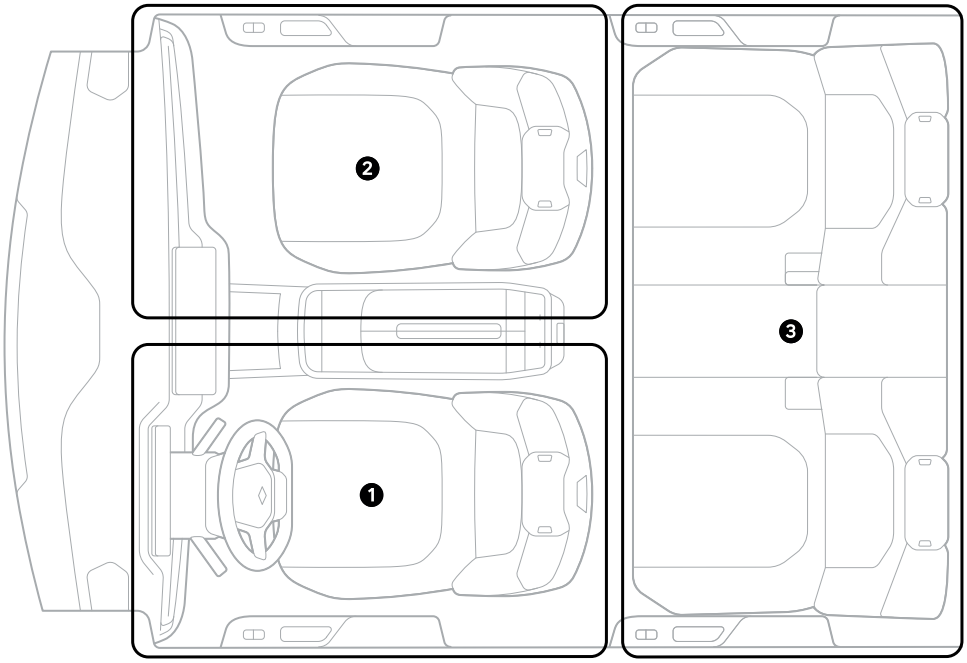

Item	Description
1	Climate zone for the driver seat
2	Climate zone for the front passenger seat
3	Climate zone for the rear passenger seats

For more settings, choose **Fan** at the bottom of the center display.

Control the climate in the rear cabin with the center or rear display.

To turn on climate preconditioning or set the temperature before you enter the vehicle, use the Rivian mobile app or Apple Watch app, if installed and enabled.

Auto Cabin Ventilation

Auto cabin ventilation automatically blows ambient air into the vehicle on extremely warm days to help prevent extremely high temperatures in the cabin while the vehicle is in **P** (Park).

Auto cabin ventilation is enabled by default. If it is active, the vehicle notifies you in the Rivian mobile app.

To turn it off, go to **Settings** **> Climate** on the center display and turn off **Auto cabin ventilation**. You can also turn it on or off in the Rivian mobile app.

> **NOTE**
> While parked, the vehicle may make sounds during any of these conditions:
>
> - Climate preconditioning
> - Vehicle charging
> - Installation of a software update
> - Battery conditioning (heating or cooling) in extreme weather
> - Protection of the displays or vehicle against overheating

Center Display Controls

The table below describes the primary climate controls that appear at the bottom of the center display.

Icon	Name	Description
	Decrease temperature	Decrease the temperature. Choose and hold the blue **Decrease Temperature** button to decrease the temperature to Low.
	Fan	Choose **Fan** to access additional climate controls. • If Heating, Cooling, and Conditioning is turned on, the vehicle displays the current temperature and climate status next to this icon. • If Heating, Cooling, and Conditioning is turned off, the vehicle displays the current fan speed level and controls next to this icon. Adjust the fan speed down (-) or up (+). **NOTE** If Auto is turned on, the vehicle displays Low, Medium, or High as the fan speed level.
	Increase temperature	Increase the temperature. Choose and hold the red **Increase Temperature** button to increase the temperature to High.
	Seat climate	Choose **Seat Climate** to access the following climate settings: • Heat the steering wheel for a limited time. (Available on the driver side only.) • Ventilate the seat. A ventilated seat recirculates the in-cabin air. Choose **Ventilate** to cycle through levels of air ventilation, including off. • Heat the seat. Choose **Heat** to cycle through levels of heat, including off.
	Front defog or defrost	Clear the front windshield. Choose **Front Defog or Defrost** to cycle through defog, defrost, and off.
	Rear defrost	Clear the rear window and side mirrors.

Fan offers additional controls in the Climate Controls and Vent Controls panels.

Climate Controls Panel

The driver and front passenger panels offer the same controls except for the heated steering wheel.

Icon	Name	Description
	Climate power	Turn on power to the climate controls for the front and rear of the cabin. **NOTE** If you turn off Climate Power, it doesn't affect the seats or steering wheel.
	Heat side mirrors	Heat the side mirrors.
	Heat steering wheel	Heat the steering wheel for a limited time.
	Pet Comfort	Use Pet Comfort to maintain the cabin temperature for pets after you leave your vehicle.
(no icon)	Schedule	Use Climate Schedule to prepare the vehicle and its cabin climate conditions prior to the travel departure time on the days that you specify.
(no icon)	Hold	Use Climate Hold to keep the climate controls turned on after you leave your vehicle.
	Heating, cooling, and conditioning	Turn on **Heating, Cooling, and Conditioning** to have the vehicle heat or cool the air based on the temperature you specify. Turn off **Heating, Cooling, and Conditioning** to have the vehicle only blow air. (The air won't be heated or cooled.) At the bottom of the center display, the temperature controls become fan speed controls. **NOTE** You can turn off Heating, Cooling, and Conditioning in extreme weather to save power.
SYNC	Sync	Turn on **Sync** to make the temperature setting of the front passenger-side and rear cabin zones the same as the temperature setting of the driver-side zone. Turn off **Sync** to allow independent temperature control of the various zones.

Icon	Name	Description
AUTO	Air recirculation	Choose **Air Recirculation** to cycle through the following: • **Fresh air:** Allow air from outside into the vehicle. • **Air recirculation:** Recirculate the air inside the vehicle. • **Auto air recirculation:** Automatically allow outside air or recirculate cabin air to enhance cabin comfort.
AUTO	Auto	Turn on **Auto** to have the vehicle control the vents; fan speed; heating, cooling, and conditioning; and air recirculation to achieve the temperature you specify. Adjust the direction of the airflow from the vents. Auto turns off automatically if you turn on **Defrost** or **Defog**, or turn off **Heating, Cooling, and Conditioning**.
	Fan	Adjust the fan speed down (-) or up (+). If Auto is turned on, the options are Low, Medium, and High.

Vent Controls Panel

The controls vary depending on the row you select, Front or Back.

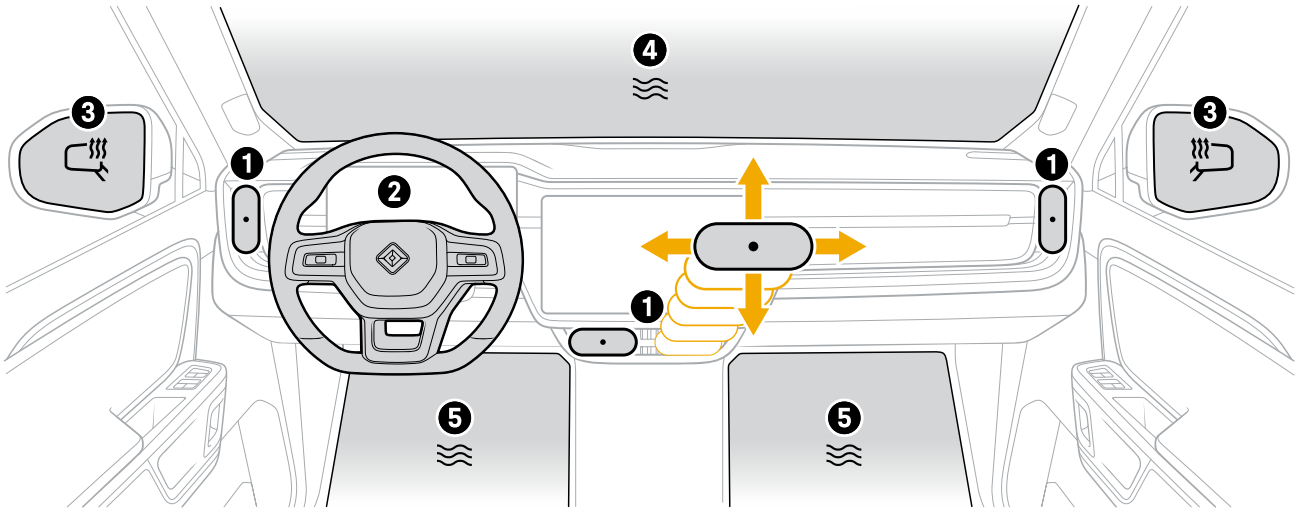

Item	Icon	Name	Description
1		Front center and side vents	Choose **Vent** to turn on each vent. Choose **Vent** and move it to change the direction of the airflow. Use the center display to adjust the vent positioning.

Item	Icon	Name	Description
		Cabin air	The vents blow air. (The air temperature is indicated by the color shown on the center display.)
2	(no icon)	Heat steering wheel	Choose the steering wheel to heat the steering wheel for a limited time.
3		Heat side mirrors	Choose either side mirror to heat the side mirrors.
4		Front windshield vent	Turn on the front windshield vent. If the temperature settings of the driver-side and front passenger-side zones differ, the front windshield vent blows air at the temperature of the driver-side zone. **NOTE** Turning off the front windshield vent shuts off **Defrost** or **Defog**.
5		Front foot vents	Turn on both the driver- and passenger-side foot vents.
	A	Vent preset A	Apply the vent positioning saved in this preset. If you make any changes and want to update the preset, choose **Save preset**.
	B	Vent preset B	Apply the vent positioning saved in this preset. If you make any changes and want to update the preset, choose **Save preset**.
	Front	Front climate	Access the controls for the front cabin.
	Back	Back climate	Access the controls for the rear cabin.
	(no icon)	Heat seat	Choose a seat to access the following climate settings: • Ventilate the seat. A ventilated seat recirculates the in-cabin air. Cycle through levels of air ventilation, including off. • Heat the seat. Cycle through levels of heat, including off.

Rear Cabin Controls

Fan offers climate controls for the rear cabin.

Climate Controls Panel

Choose **Back**, and the Climate Controls panel allows you to adjust the temperature of the rear cabin if Heating, Cooling, and Conditioning is turned on.

Icon	Name	Description
(no icon)	Back Row Temp	The vehicle displays the current temperature of the rear climate zone.
	Decrease temperature	Decrease the temperature. Choose and hold the blue **Decrease Temperature** button to decrease the temperature to Low. **NOTE** This control isn't available under either of the following conditions: • Heading, Cooling, and Conditioning is turned off. • Sync is turned on.
	Increase temperature	Increase the temperature. Choose and hold the red **Increase Temperature** button to increase the temperature to High. **NOTE** This control isn't available under either of the following conditions: • Heading, Cooling, and Conditioning is turned off. • Sync is turned on.

Vent Controls Panel

Choose **Back**, and the Vent Controls panel offers the controls described in the table below.

Icon	Name	Description
Front	Front climate	Access the controls for the front cabin.
Back	Back climate	Access the controls for the rear cabin.
	Rear center vents	Choose **Vent** to turn on both left and right center vents. Manually adjust either vent to change the direction of the airflow.
	Rear foot vents	Choose **Vent** to turn on both left and right foot vents.
	Heat seat	Heat the seat. Cycle through levels of heat, including off.

Rear Display Controls

The rear display offers the Climate Controls panel for the rear cabin, described in the table below.

Icon	Name	Description
	Fan	If Sync is turned on, the vehicle displays **Fan** and the temperature setting of the driver-side zone for the cabin of the vehicle. If Sync is turned off, the vehicle displays the temperature setting of the rear cabin.
SYNC	Sync	The vehicle displays **Sync** if all climate zones are synchronized to the same temperature setting on the center display.
	Heat seat	Heat the seat. Cycle through levels of heat, including off.

NOTE

To lock the rear display so rear-cabin passengers can't access the climate controls, go to **Vehicle** on the status bar on the center display. Choose **Shortcuts** **> Rear display lock**.

Additional Climate Controls

Choose the Climate Controls panel in the rear display to access additional climate controls, described in the table below.

Icon	Name	Description
	Decrease temperature	Decrease the temperature. Choose and hold the blue **Decrease Temperature** button to decrease the temperature to Low.
	Fan	If Sync is turned on, the vehicle displays **Fan** and the temperature setting of the driver-side zone for the cabin of the vehicle. If Sync is turned off, the vehicle displays the temperature setting of the rear cabin.
	Increase temperature	Increase the temperature. Choose and hold the red **Increase Temperature** button to increase the temperature to High.
	Heat seat	Heat the seat. Cycle through levels of heat, including off.
	Vents	Choose **Vent** to cycle through the following: • Turn on the left and right foot vents. • Turn off the foot vents, and turn on the left and right center vents. Manually adjust either vent to change the direction of the airflow. • Turn on the foot vents, and the center vents stay turned on. • Turn off the foot and center vents.

Heated Steering Wheel

The steering wheel offers a heat option. To turn on the heat, use one of the following options on the center display:

- Choose **Seat Climate** and then **Heat Steering Wheel** .
- Choose **Fan** and then **Heat Steering Wheel** in the Climate Controls panel.
- Choose **Fan** and then the steering wheel in the Vent Controls panel.

Icon	Name	Description
	Heat steering wheel	Heat the steering wheel for a limited time.

To heat the steering wheel before you enter the vehicle, use the Rivian mobile app.

NOTES

- The heat turns off automatically after a period of time.
- The heated steering wheel has a separate control. If you turn off Climate Power, it doesn't affect the heated steering wheel.

Window Defrost

The vehicle offers defrost options for the front windshield and rear window areas, as well as a defog option for the front.

To defrost the windows, choose **Front Defog or Defrost** or **Rear Defrost** at the bottom of the center display.

To defog or defrost before you enter the vehicle, use the Rivian mobile app.

Defog or Defrost the Windshield

Icon	Name	Description
	Front defog or defrost	Choose **Front Defog or Defrost** to cycle through the following: • **Defog:** Clear the front windshield of fogging. A blue icon indicates defog. • **Defrost:** Turn on maximum defrost settings and clear the front windshield using heat. The bottom of the front windshield also heats to help deice windshield wipers. A red icon indicates defrost. • **Off:** Turn off maximum defrost settings. The climate settings return to the previous settings.

Defrost the Rear Window and Side Mirrors

Icon	Name	Description
	Rear defrost	Clear the rear window and side mirrors using heat. The bottom of the front windshield also heats to help deice windshield wipers.

NOTE

You can also heat the side mirrors only from the climate controls panel.

Seat Climate Control

About Seat Climates

The driver and front passenger seats can heat or ventilate.

The left and right rear seats can heat.

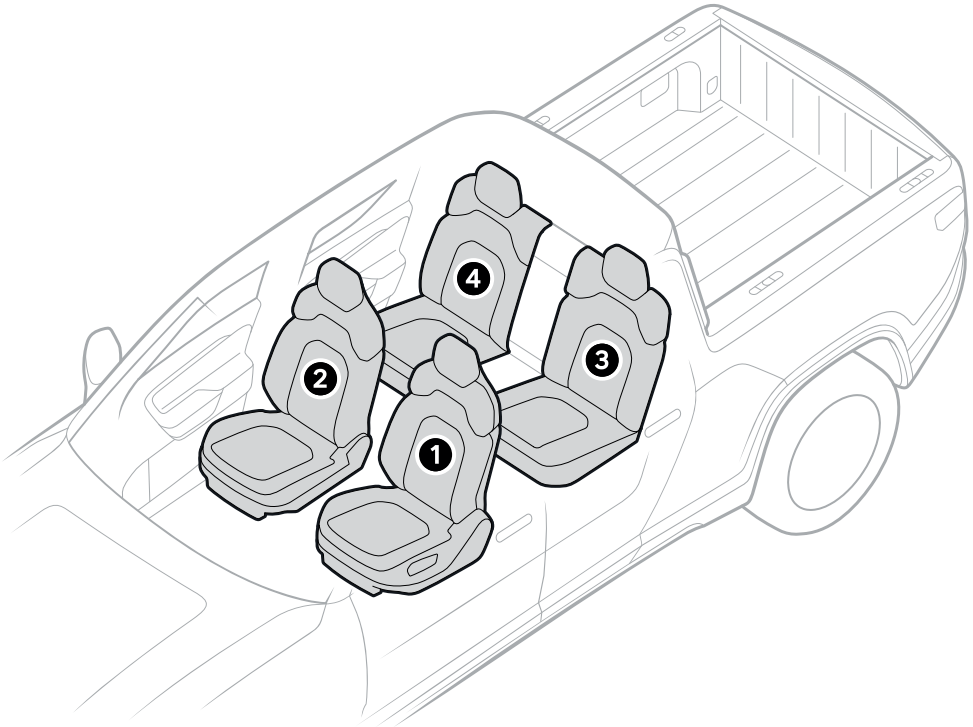

Item	Description
1	Driver seat
2	Front passenger seat
3	Left rear seat
4	Right rear seat

To heat or ventilate seats before you enter the vehicle, use the Rivian mobile app.

NOTES

- If a seat is set to the highest level of heat, the vehicle automatically lowers it to the middle level of heat after 30 minutes.
- If a seat is set to the middle level of heat, the vehicle automatically lowers it to the lowest level of heat after 1 hour.

Front Seat Climates

At the bottom of the center display, choose **Seat Climate** to change the climate settings of the driver or passenger seat.

Icon	Name	Description
	Heat steering wheel	Heat the steering wheel for a limited time. (Available on the driver side only)
	Ventilate seat	Ventilate the seat. Choose **Ventilate** or **Seat Climate** to cycle through levels of air ventilation, including off. A ventilated seat recirculates the in-cabin air.
	Heat seat	Heat the seat. Choose **Heat** or **Seat Climate** to cycle through levels of heat, including off.

NOTES

- Depending on the ambient temperature, the vehicle displays the Seat Climate icon with the **Heat** or **Ventilate** icon but doesn't automatically heat or ventilate the seat.
- Climate Power and seat climates are separate controls. If you turn off Climate Power, it doesn't affect the seats.

Rear Seat Climates

Use the center or rear display to heat the left or right rear seat.

Center Display Controls

Go to **Fan** **> Back**, and choose **Heat Seat** .

Icon	Name	Description
	Heat seat	Heat the seat. Cycle through levels of heat, including off.

Rear Display Controls

On the rear display, choose **Heat Seat** .

> **NOTE**
> Climate Power and seat climates are separate controls. If you turn off Climate Power, it doesn't affect the seats.

Pet Comfort

About Pet Comfort

Pet Comfort maintains the cabin temperature so that pets can remain safely and comfortably in your vehicle after you leave.

When you close all doors to leave, the center display shows the cabin temperature, setting, and information that your pet is comfortable. Passersby can view the center display and know that your pet is safe in your absence.

To turn Pet Comfort on or off, use quick controls or the Climate panel on the center display. You can also use the Rivian mobile app to monitor Pet Comfort or turn it on or off.

WARNING

Use only for pets. Never leave a child unattended in the vehicle.

NOTE

The vehicle must be in **P** (Park) to use Pet Comfort.

Pet Comfort on the Center Display

To turn on Pet Comfort:

1. Choose **Fan** from the menu on the center display.
2. On the Climate panel, choose **Pet Comfort** .
3. Choose **Turn on**, or choose **Cancel** if you decide not to use Pet Comfort.

To turn off Pet Comfort, drive the vehicle or choose **Pet Comfort** on the Climate panel.

You can also use quick controls or the Rivian mobile app to turn Pet Comfort on or off.

When the center display indicates Pet Comfort is active (your pet is safe and comfortable), the e-latches and window switches are disabled.

- If you open the windows and then turn on Pet Comfort, the windows remain open.
- If someone is locked inside, they can quickly press an e-latch four times to enable the door.

NOTES

- You can turn on Pet Comfort when the battery range is greater than 30 mi (48 km).
- After you turn on Pet Comfort, it stays on until the battery is depleted.
- You must turn off Pet Comfort before you start any software updates.

Pet Comfort in Mobile

Use the Rivian mobile app to monitor, turn on, or turn off Pet Comfort when you're away from your vehicle.

The app indicates when Pet Comfort is active.

When Pet Comfort is active, this affects the app as follows:

- Climate preconditioning isn't available.
- Access to doors and openings is available, and you can vent the windows.

The vehicle communicates Pet Comfort issues through the app, push notifications, and text messages.

If the vehicle detects an issue with its climate system or an extreme temperature for a period of time:

- When the app is open, it displays an alert.
- When the app is closed, you receive a text message or push notification about the issue if you have opted into one or both communication methods.

If Pet Comfort is active and the vehicle battery is critically low, with 5 mi (8 km) or less of range available, you receive a push notification.

Climate Schedule

About Climate Schedules

When a Climate Schedule is active, the vehicle prepares the cabin climate conditions prior to the travel departure time on the days that you specify.

Use the Climate Schedule panel on the center display or in the Rivian mobile app to create and manage schedules and turn them on or off.

NOTES

- The vehicle must be in **P** (Park) to use a Climate Schedule.
- If you set a Climate Schedule, and later cancel a planned drive or don't drive the vehicle for a long time, ensure that you turn off the schedule. If you don't turn off the Climate Schedule, the vehicle still sets the climate as scheduled. This results in one of the following:
  - The vehicle loses range if it isn't plugged into a charger.
  - The vehicle uses more energy from the grid if it's plugged into a charger.

Set Up a Climate Schedule

To set up a Climate Schedule:

1. Choose **Fan** from the menu on the center display.
2. On the Climate panel, choose **Schedule**.
3. Choose **Add**.
4. Choose **Edit** to enter a name for the new schedule. Then choose **Save**.
5. Choose the applicable days of the week.
6. Choose the departure time.
7. For the cabin, you have the following options:
   - Choose **Decrease Temperature**.
   - Choose **Increase Temperature**.
   - Choose **Defrost** to defrost the front windshield, rear window, and side mirrors.
8. For the surfaces, you have the following options:
   - Choose **Heat** or **Ventilate**. Only the driver and front passenger seats can ventilate.
   - Select the seats you want to heat or ventilate. Choose **Heat Seat** or **Ventilate Seat**.
   - Choose **Heat Steering Wheel** to heat the steering wheel for a limited time.
9. Energy Usage is disabled by default. If you turn on Energy Usage, the vehicle uses energy from the charger, if available, to maintain range.
10. Choose **Save**.

Change a Climate Schedule

To change a Climate Schedule:

1. Choose **Fan** from the menu on the center display.
2. On the Climate panel, choose **Schedule**.
3. Choose the Climate Schedule you want to change.
4. Make your changes.
5. Choose **Update** to save your changes.

Remove a Climate Schedule

To remove a Climate Schedule:

1. Choose **Fan** from the menu on the center display.
2. On the Climate panel, choose **Schedule**.
3. Choose the Climate Schedule you want to remove.
4. Choose **Delete**.

Climate Hold

About Climate Hold

Climate Hold keeps the climate controls turned on after you leave your vehicle, whether or not the vehicle is occupied. It also disables the interior alarm sensors to prevent remaining occupants from activating the alarm.

During Climate Hold, any occupant in the vehicle can use the center or rear display to wake and use the displays. Climate Hold remains active.

WARNING

Never leave a child unattended in the vehicle.

NOTE

The vehicle must be in **P** (Park) to use Climate Hold.

To turn Climate Hold on or off, use one of the following options:

- Quick controls
- The Climate panel on the center display
- The Rivian mobile app

Climate Hold on the Center Display

To turn on Climate Hold:

1. Choose **Fan** from the menu on the center display.
2. On the Climate panel, you have two options:
   - Choose **Hold** to turn on Climate Hold for the stated time-out duration.
   - Choose **Edit** to change how long you want the climate controls to stay on. Update the time-out duration. Choose **Turn on** to turn on Climate Hold, or choose **Cancel** if you decide not to use Climate Hold.

To turn off Climate Hold, drive the vehicle or choose **Hold** on the Climate panel.

You can also use quick controls to turn Climate Hold on or off.

NOTES

- You can turn on Climate Hold when the battery range is greater than 30 mi (48 km).
- You must turn off Climate Hold before you start any software updates.

Climate Hold in Mobile

Use the Rivian mobile app to turn Climate Hold on or off when you're away from your vehicle.

If Climate Hold is active and the vehicle battery is critically low, with 30 mi (50 km) or less of range available, you receive a push notification and Climate Hold turns off.

Roof

About the Roof

The durable, laminated glass roof blocks more than 99.9% of ultraviolet (UV) light.

WARNING

The roof isn't load-bearing. To avoid damage, don't place any items on top of the roof. To transport items on top of your vehicle, install and use the optional Cargo Crossbars instead.

There are two options:

- **Standard glass roof:** A fixed tint provides a single level of opacity.
- **Dynamic glass roof:** A variable haze offers two states of opacity, on or off. To lighten or darken the roof, choose **Vehicle** from the status bar on the center display. Choose **Roof** to change the opacity state.

Weather App

About the Weather App

Connect+ subscribers have access to the Weather app, which provides real-time weather details and a 10-day forecast for your vehicle's location as well as points of interest on the map.

> **NOTE**
> To access the Weather app and see weather details in Navigation, you must do the following:
> - Subscribe to Connect+.
> - Allow precise location sharing with Navigation.
> - Accept Google Maps terms in Navigation.

To open the Weather app, tap the weather icon in the status bar on the center display (the icon's appearance reflects local time and weather). In the app, you can view daily and hourly forecasts, set a climate schedule, and set a charge schedule.

To see the weather at a destination, go to **Navigation** on the center display and search for the location on the map. The weather will appear in the place details. Tap the weather to see the location's full weather details and forecasts in the Weather app.

> **NOTES**
> - Weather details will automatically update every few minutes or miles driven.
> - You'll see two real-time temperature reports on the center display:
> - Temperature reported by Google is shown in the middle of the screen.
> - Temperature reported by the vehicle's sensors is shown in the top left corner of the screen.

Phone and Media

Phone

Bluetooth Pairing

Choose **Connectivity** on the status bar to manage *Bluetooth*® pairing, including turning it on or off.

Connect to a Phone via Bluetooth

To pair your phone with your vehicle:

1. Choose **Connectivity** on the status bar.
2. Choose **Bluetooth** to enable the vehicle to search for available phones.
3. Choose **Pair a Device** to pair a new phone via Bluetooth.
4. On your phone, go to the Bluetooth settings.
5. On the center display, choose **Next**.
6. When the center display lists your phone, choose your phone.
7. Confirm that the device code on your phone matches the device code on the center display.
8. On your phone, choose **Pair**.

After pairing, the vehicle saves its connection to your phone. You don't have to pair your phone again.

Bluetooth Settings

Access Bluetooth settings through the following:

- **Bluetooth**
- **Media**, **Phone**, and **Settings** apps from the menu on the center display

If you have a saved phone that you want to remove, choose **Expand** and then choose **Forget Device**.

Phone App

To manage phone calls, pair your phone to your vehicle via *Bluetooth*®.

To adjust the volume, choose **Volume** at the bottom of the center display or scroll the left thumb control on the steering wheel.

Make a Call

Choose **Phone** from the menu on the center display. You can make a call using any of the following options:

- **Favorites:** Choose the **Favorites** tab to access a list of your favorite contacts.
- **Recent Calls:** Choose the **Recent Calls** tab to access a list of your recent phone calls.
- **Contacts:** Choose the **Contacts** tab to access a list of your contacts.
- **Messages:** Choose the **Messages** tab to access your messages.
- **Keypad:** Choose the **Keypad** to dial a phone number.

  As you dial a phone number, contacts may appear. You can choose a contact to call.

  During an active call, you can choose **Add Call** and dial a phone number to add another call.

NOTES

- If Rivian Assistant is active, you can use Rivian Assistant to make a call.
- Support for conference or parallel calls may vary, depending on your specific phone and cellular network.

Manage Incoming and Active Calls

To manage incoming and active phone calls, you have two methods available:

- Use the multi-functional thumb control on the left side of the steering wheel. The left controls correspond to the options on the panel that appears on the driver display.
- Use the center display. The top of the panel lists the active calls.

The table below describes the phone controls that can appear on the driver and center displays.

Icon	Name	Description
	Call	• Make a call. • Accept an incoming call.

Icon	Name	Description

	End Call	• End the current call.
		• Reject and send an incoming call to voicemail.
		• If you have a merged call:
		  • Driver display: Choose the red **End Call** to end all calls.
		  • Center display: You can end each call separately.

	Reject and Send to Voicemail	If you have an incoming call, reject and send it to voicemail.
	Hold and Accept	If you have an incoming call, put the current call on hold and accept the incoming call.
	End and Accept	If you have an incoming call, end the current call and accept the second incoming call.
	End Call on Hold and Accept	Center display: If you have two active calls and an incoming call, end the call on hold and accept the incoming call.
	Mute	Mute or unmute your microphone.
	Switch Calls	Driver display: If you have two active calls, switch between them. Center display: If you have more than one active call, choose between calls at the top of the panel. (There is no icon.)
	Merge	Center display: If you have more than one active call, you can merge them.
	Keypad	Center display: On an active call, choose **Keypad** to respond to an automated phone system. **NOTE** To make a call, choose **Phone** from the menu on the center display. Then choose **Keypad** and dial the number on the keypad.

Make SOS or Emergency Calls

SOS or emergency calls don't require the phone to be paired to the vehicle using Bluetooth. See Emergency SOS.

Smartphone Integration

When you pair your phone to your vehicle using *Bluetooth*®, you can choose to grant access to the following:

- **Phone Calls:** Use the center display to make or receive phone calls.
- **Contacts:** Use the center display to access your list of contacts.
- **Media Audio:** Stream audio, such as music or podcasts, from your phone to the vehicle.

> **NOTE**
> If you choose to allow uploading of contact information from your smartphone, contact data is automatically stored on the vehicle. Stored contacts are only visible when the associated phone is connected to the vehicle via Bluetooth.

Choose **Phone** from the menu on the center display to access the following:

- **Favorites:** Choose the **Favorites** ☆ tab to access a list of your favorite contacts.
- **Recent Calls:** Choose the **Recent Calls** tab to access a list of your recent phone calls.
- **Contacts:** Choose the **Contacts** tab to access a list of your contacts.
- **Keypad:** Choose the **Keypad** to display a keypad and dial phone numbers.
- **Switch Devices:** Choose **Switch Devices** to display a list of previously connected devices. Choose the device you want to switch to, or choose **Bluetooth** to access the Bluetooth settings.

Favorites

The center display lists your favorite contacts.

Choose a favorite contact to make an immediate call and display contact information.

Access each favorite contact as follows:

- Choose the contact to make an immediate call.
- Choose **Information** to display contact information.

> **NOTE**
> Use your phone, not the center display, to designate a contact as a favorite.

Recent Calls

The center display lists the following:

- Calls from the call history of the connected phone
- Calls you've made using the keypad from the center display

Outgoing Call appears in front of any calls you made.

Access each recent call as follows:

- Choose the contact or phone number, if available, to make an immediate call.
- Choose **Information** to display contact information, if available.

Contacts

To manage your contacts:

1. Search for a contact or select a letter from the alphabet column.

   > **NOTES**
   > - Choose **Search for contacts** to display a keyboard.
   > - Choose **Sort** to sort the contacts by first or last name.

2. Select a contact.
3. The center display lists the available contact information, which includes phone numbers and addresses.

   Choose a phone number to make an immediate call, or choose an address to open it in the Navigation app.

> **NOTES**
> - Use your phone, not the center display, to add a contact.
> - If **Contacts** is turned off, access your phone and allow it to share your contacts.

Media Audio

Stream audio, such as music or podcasts, from your phone to the vehicle. Choose the media source on your phone.

Rivian Mobile App

The Rivian mobile app, or Apple Watch app, if installed and enabled, is the primary key to your vehicle and offers several options, including the following:

- Add a phone to act as a key.
- Manage the drivers authorized to access the vehicle (vehicle owners only).
- Find a charging location.
- Start a charging session.
- Share an address from your phone to the vehicle.
- Remotely monitor the vehicle.
- Schedule vehicle service.

Download the app from the App Store® or on Google Play.

Phone Thumb Controls

When you receive an incoming call or are on an active call, panels appear in both the driver and center displays. You can manage phone calls on the center display or with the left thumb controls, as described below.

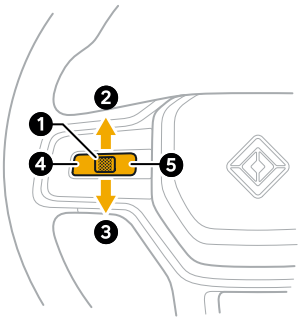

Item	Action	Description
Incoming Call		
1	Press thumbwheel	Perform the highlighted action
1	Long-press thumbwheel	No action
2	Scroll thumbwheel up	Highlight top option in incoming call panel (accept)
3	Scroll thumbwheel down	Highlight bottom option in incoming call panel (decline)
4	Press left thumb control button	No action
5	Press right thumb control button	No action
Active Call		
1	Press thumbwheel	Hang up
1	Long-press thumbwheel	Evoke Rivian Assistant
2	Scroll thumbwheel up	Increase call volume
3	Scroll thumbwheel down	Decrease call volume
4	Press left thumb control button	No action
5	Press right thumb control button	No action

Connectivity

Cellular Connectivity

The vehicle can provide the following when it has cellular connectivity:

- Maps and navigation
- Entertainment
- Live traffic updates
- In-vehicle Wi-Fi® hotspot
- Remote connection with the Rivian mobile app or Apple Watch app, if installed and enabled
- SOS or emergency calls

Choose **Connectivity** on the status bar to manage cellular connectivity, including turning it on or off.

NOTES

- Cellular connectivity is subject to network and carrier service availability.
- Cellular data features require a data subscription. Subscription charges may apply. To learn about the services that are included with the vehicle, check your Rivian account at rivian.com/account.
- Cellular service is supported in certain countries. If the vehicle roams outside of its coverage plan area, cellular service may be unavailable or available for a certain period of time only. Check your Rivian account for messages.

Wi-Fi Hotspot

About the Wi-Fi Hotspot

To have internet access in the vehicle, activate the Wi-Fi® hotspot through your Rivian account at rivian.com/account.

Use the Wi-Fi Hotspot

Choose **Connectivity** on the status bar to manage the Wi-Fi hotspot, including turning it on or off.

Connectivity on the status bar displays the status of the Wi-Fi hotspot.

You can also use the Settings app in the center display.

> **NOTE**
> The Wi-Fi hotspot requires a Connect+ subscription.

The Wi-Fi hotspot icon indicates the status of the Wi-Fi hotspot.

Icon	Description
	The Wi-Fi hotspot is turned on.
	The Wi-Fi hotspot is turned off.

1. Choose **Connectivity** on the status bar.
2. Turn **Hotspot** on or off.

If the hotspot is turned on, view the password, the hotspot name, and the number of connected devices on the center display. On the device you wish to connect to the Wi-Fi hotspot, scan the QR code on the center display or follow these instructions:

1. Go to the Wi-Fi settings.
2. Select the name of the hotspot.
3. Enter the password displayed on the center display.
4. Choose **Join**.

NOTES

- If your devices lose connection to the Wi-Fi hotspot, check the center display for more information.
- The vehicle automatically turns off the Wi-Fi hotspot when you exit the vehicle.
- The Wi-Fi hotspot is available only when the vehicle has LTE connectivity. If the vehicle loses LTE connectivity, it automatically turns off the Wi-Fi hotspot.

Change the Name

1. Access the Wi-Fi® hotspot settings through one of the following:
   - Choose **Wi-Fi Hotspot** and then choose **Hotspot**.
   - Go to **Settings** **> Hotspot**.
2. Choose **Connectivity** on the status bar.
3. Choose **Wi-Fi Hotspot**.
4. Choose **Edit** next to the hotspot name.
5. Enter the new name.
6. Choose **Save**.

Change the Password

1. Access the Wi-Fi® hotspot settings through one of the following:
   - Choose **Wi-Fi Hotspot** and then choose **Hotspot**.
   - Go to **Settings** **> Hotspot**.
2. Choose **Connectivity** on the status bar.
3. Choose **Edit** next to the password.
4. Enter the new password.
5. Choose **Save**.

Vehicle Wi-Fi

About Vehicle Wi-Fi

The vehicle uses a Wi-Fi® connection to do various tasks, including the following:

- Download Over the Air (OTA) software updates for the vehicle.
- Connect remotely to the Rivian mobile app or Apple Watch app, if installed and enabled.
- Access the map and search for locations.
- Stream from the available media options.
- Enable remote diagnostics and offload log data.

Choose **Connectivity** on the status bar to manage vehicle Wi-Fi, including turning it on or off.

You can also use the Settings app in the center display.

Access Wi-Fi Settings

To access the Wi-Fi® settings, go to **Settings** ⚙ **> Wi-Fi**.

If you have a saved Wi-Fi network, you can select that network to automatically join it. You can also find a network or remove any network you no longer want to save.

CAUTION

The vehicle doesn't display a lock icon next to an unsecured network; this indicates the network may be a security risk. Ensure you connect the vehicle to a secured network.

Connect to Wi-Fi

You can connect to known networks at any time. To add a new network, the vehicle must be in **P** (Park).

1. To search for available Wi-Fi networks, choose **Connectivity** on the status bar.
2. Choose **Wi-Fi**.
3. When the vehicle displays a list of available Wi-Fi networks, choose the network you want to join.
4. If the network requires a password, enter it using the keyboard that appears on the center display.

   NOTE

   Your vehicle automatically saves the password so you won't have to enter it again.

5. If the network you want isn't listed, under Other networks, choose **Other...**.

Find a Wi-Fi Network

1. Go to **Settings** ⚙ **> Wi-Fi**.
2. Under Other networks, choose **Other...**.
3. Enter the network name.

> **NOTES**
> - The network name is case-sensitive.
> - The vehicle does not support connecting to Wi-Fi SSIDs containing escape, newline, carriage return, or tab characters.

4. Choose **Search**.
5. Enter the password.

> **NOTES**
> - The password is case-sensitive.
> - Choose **Show** 👁 to view the password.

6. Choose **Join**.

> **NOTES**
> - Ensure your router or extender uses Wi-Fi Protected Access 2-Advanced Encryption Standard (WPA2-AES) encryption for wireless security. The vehicle doesn't support WPA3 encryption. The vehicle doesn't support Temporal Key Integrity Protocol (TKIP) or Wired Equivalent Privacy (WEP) encryption so it won't show or connect to networks using TKIP or WEP.
> - Ensure the Wi-Fi network doesn't use a captive portal, which is used by some cafes or hotels to manage Wi-Fi access. The vehicle may initially connect but it won't support internet access through a captive portal. If you've previously saved a captive portal network, remove it from the list of saved networks to prevent an automatic connection.

Remove a Saved Wi-Fi Network

1. Go to **Settings** ⚙ **> Wi-Fi**.
2. Choose **Manage Networks**.
3. Choose **Delete** 🗑 to immediately delete a saved Wi-Fi network.
4. Choose **Remove**.

The RivianVehicles Network

If your vehicle is near or at a Rivian facility, such as a service center or office, a Rivian-only network named "RivianVehicles" may appear on the list of available Wi-Fi networks. Your vehicle may automatically connect to this secure network.

Your vehicle connects to "RivianVehicles" under the following conditions:

- The vehicle's Wi-Fi is enabled.
- The vehicle is near or at a Rivian facility.
- The vehicle is within range of the "RivianVehicles" network.

You can manually connect your vehicle to "RivianVehicles" if your vehicle is currently connected to a different Wi-Fi network.

Device Charging

USB Charge Ports

Several USB-C power outlets are available in the vehicle cabin.

NOTE

- Use the USB-C outlets within the storage bin of the center console to charge and store data, such as security footage from the Gear Guard.
- Use the USB-C outlets at the back of the head restraints and below the rear display screen for charging only.

Wireless Charger

2024 to Early-2026 Version

Once you power on your vehicle, you can charge your Qi-compatible phone and other rechargeable, battery-operated devices on the high-speed wireless charger located on the upper tray of the center console. Place the phone face-up on the charger to begin charging, aligning the phone against the center rib of the charging pad. You'll see an active charging icon on your device if this is a supported feature. Charging speed may vary depending on the device model, the initial battery level of the device, temperature, and any applications running on the device.

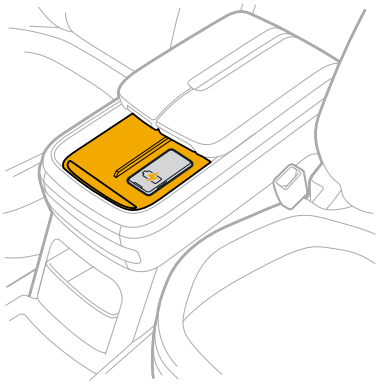

The charger is designed to work with phones encased in most standard phone cases.

While you can charge two phones at the same time, the charging pad is designed to work best simultaneously charging a phone and another small item such as ear buds.

The charging pad has a temperature sensor, and it stops charging if a device or environment is too hot.

CAUTION

- To avoid damage to the charging pad, don't put metallic or magnetic objects on the pad or between the phone and charger. The charging pad is only meant to hold a compatible device with a rechargeable battery, such as a phone.
- Don't leave items such as key cards or credit cards on the pad. While the charging pad will not damage a key card, the presence of a card on the pad will prevent charging.

Troubleshooting

If This Happens	Try This
Device is too hot	• Remove the device from the charger, wait for it to cool down, and try charging again later.
Wireless charger sensor doesn't detect compatible device	• Remove any wallet cases from the phone. • Remove phone cases thicker than 5 millimeters for best phone detection and charging performance. • Remove the device from the charger, wait a few seconds, and place the device back on the pad. • Move the device to another position on the charger to find proper charging positioning.
Device won't charge	• Ensure that the device is a 1.2.4 qi-compatible device (such as iPhone® and Android mobile devices, or pair of earbuds). • Ensure that you're logged into your account on the center display. • Place the phone face-up against the center rib of the charging pad. • Ensure that there isn't an incompatible object on the charging pad (such as key cards, foreign objects, or metal pieces). Remove items such as coins or credit cards from the storage pocket of a phone case. • Respond to any warning on the center display that indicates an unauthorized item on the charging pad.

Early-2026 and Later Version

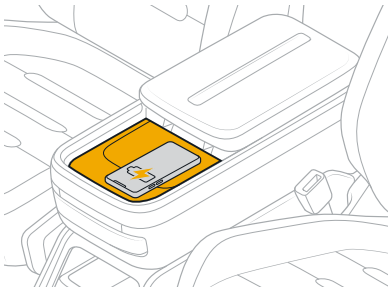

Once you power on your vehicle, you can charge your Qi2- or MagSafe-compatible phone and other rechargeable, battery-operated devices on the high-speed wireless charger located on the upper tray of the center console. Place your device on the pad; magnets (one on the driver side and one on the passenger side) automatically align it for optimal charging. You'll see an active charging icon on your device if this is a supported feature. Charging speed may vary depending on the device model, the initial battery level of the device, temperature, and any applications running on the device.

WARNING

- While the charger is equipped with Foreign Object Detection (FOD) technology, it may not detect very small metallic items, such as coin cell batteries, paperclips, staples, or small pieces of metallic foil. If present, these objects can become extremely hot and cause skin burns or vehicle damage.

CAUTION

- Don't put objects on the pad or between the phone and charger. The charging pad is only meant to hold a compatible device with a rechargeable battery.
- Don't place credit cards, security badges, or passports between your phone and the charger, as the magnets may damage magnetic strips or RFID chips.

NOTES

- If your device or the environment becomes hot, the charger may limit or pause charging to protect the health of your device battery.
- For the best experience, use Qi2- or MagSafe-certified cases. Some MagSafe cases exceeding 3 mm in thickness may interfere with magnetic attachment or reduce the charging speed.

Troubleshooting

If This Happens	Try This
Device is too hot	• Remove the device from the charger, wait for it to cool down, and try charging again later.

If This Happens	Try This
Wireless charger sensor doesn't detect compatible device	• Verify phone compatibility. Ensure your phone supports MagSafe or Qi2 wireless charging. Non-MagSafe phones will not magnetically snap into place unless used with a MagSafe case. • Check case thickness and compatibility. Remove thick, non-MagSafe, or non-Qi2 compatible cases. If your phone's internal magnet is weak, a non-MagSafe case will block the magnetic bond. • Reposition the device. Lift the phone off the pad, wait a few seconds, and place it back down to ensure magnetic alignment.
Device won't charge	• Remove rear attachments and metal. Take off wallet attachments, credit cards, key cards, or cases with integrated metal pieces (such as ring holders, kickstands, or grip plates). • Ensure the vehicle is in ready to drive state. Charging temporarily pauses while the vehicle searches for an NFC key card. When NFC key card scan is in progress, the device will not charge. • Restart the device to clear any temporary phone software glitches that may affect charging.
Device doesn't snap into place (phones and earbuds)	• Verify case is MagSafe or Qi2 compatible. Non-MagSafe devices will not snap to the magnet. If the case is MagSafe or Qi2 compatible and it hasn't snapped into place, try removing the case and trying again (if your device is MagSafe or Qi2 compatible). • Check earbud alignment (multiple magnetic attraction points). Because the charger's magnet ring is large, small devices like earbuds may get pulled toward the outer edges rather than the center coil. Gently move the earbuds around the pad until they snap directly onto the center, where charging begins. • Clear pad surface. Ensure there is no dust, grit, or foreign debris on the charging surface preventing a close fit.

If This Happens	Try This
Charging is intermittent	• Verify that no metallic objects, such as removable grips or ring holders, are attached to the back of the phone. • Remove your phone case and retry.
Charging speed is slow or reduced	• Verify that the device supports Qi2 or MagSafe charging standards. • Check the device's battery level. Charging automatically slows down as the battery approaches full capacity (typically above 80%) to protect battery health. • Allow the device and the charging pad to cool down if warm or hot. The charger limits power output when thermal limits are reached. • Close any resource-intensive apps that are running in the background on the device.

Audio

Sound System

About the Sound System

The sound system delivers surround sound from speakers throughout the cabin.

If you open a door from the inside when the sound system is on, the volume is lowered by 8 dB. The volume level returns to normal when the door is closed if a passenger is in the vehicle.

> **NOTE**
> You can use the Rivian Camp Speaker (if available) to stream music from a device with *Bluetooth*® technology.

Adjust the Volume

You can set different volume levels for various audio sources, including media, phone calls, voice navigation, and Rivian Assistant. To adjust the volume of the audio source that's currently active, do one of the following:

- Scroll the left thumb control on the steering wheel.
- Choose **Volume** on the center display. Adjust the volume for the audio source that is currently active. You can choose **Mute** to mute all audio sources.

> **WARNING**
> Playing the sound system at high volumes can cause hearing damage.

To adjust the volume for other audio sources:

1. Choose **Volume** on the center display to access the volume control for the audio source that's currently active. To access the volume controls for all audio sources, choose the icon of the active audio source above the volume control.
2. Adjust the volume for any audio source. You can choose **Mute** to mute all audio sources.

Adjust Other Audio Settings

To access the other audio settings:

1. Go to **Settings** **> Audio** .
2. Choose **Media** **> Source Selector > Audio** .
3. On the media player select **More** **> Audio Settings**.

Change the Fade and Balance

Fade indicates how much sound the vehicle sends to the back cabin versus the front. Balance indicates how much sound the vehicle sends to the left or right sides of the cabin. You can adjust the fade and balance separately. Choose **Reset** to reset fade and balance to the default settings (both values to center).

Change the Equalizer Settings

To change equalizer frequency settings, adjust the sliders.

To use a preset equalizer setting:

1. Choose **More** and select a standard preset.

> **NOTE**
> When you customize a standard equalizer preset, the settings are automatically stored in your user profile. **Custom** appears next to the preset name along with **Reset**.

2. Choose **Reset** to restore a customized individual preset to the default setting.

To create a custom preset:

1. Choose **More** and select one of the customizable presets—Custom 1 or Custom 2.
2. Adjust the equalizer frequency sliders to fine-tune the sound.
3. To name your custom preset, choose **Edit** and enter the new name.
4. To restore a custom preset to its default settings, choose **Reset**.

Change the Soundstage Center

If your vehicle is equipped with the Soundstage Center setting, control where the audio focuses. Choose **Reset** to reset the focus to the default setting.

Change the 3D Surround Sound

Control the depth of immersion experienced in the surround sound field by the driver and passengers.

Change the Dynamic Sound Adjustment

The sound system raises or lowers the volume based on the vehicle's speed to keep the loudness consistent for the driver and passengers. The available settings are Off, Low (default), and High.

Media Thumb Controls

You can use the left thumb controls in the following ways while *Bluetooth*®, Rivian Assistant, and other audio sources play.

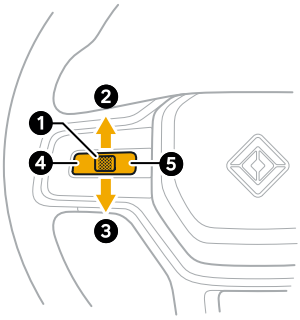

Item	Action	Description
1	Press thumbwheel	Play/Pause
1	Long-press thumbwheel	Evoke Rivian Assistant
2	Scroll thumbwheel up	Increase volume
3	Scroll thumbwheel down	Decrease volume
4	Press left thumb control button	• Previous track • Skip backward a few seconds for some media service providers*
5	Press right thumb control button	• Next track • Skip forward a few seconds for some media service providers*

* Number of seconds depends on the media service provider.

FM Radio Thumb Controls

Use the left thumb controls for FM radio in the following ways.

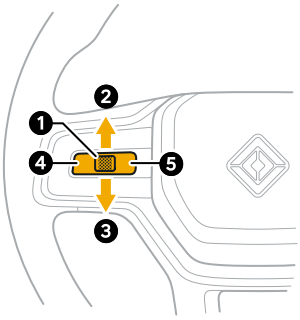

Item	Action	Description
1	Press thumbwheel	On/Off
1	Long-press thumbwheel	Evoke Rivian Assistant
2	Scroll thumbwheel up	Increase volume
3	Scroll thumbwheel down	Decrease volume
4	Press left thumb control button	• Previous local FM station • Previous favorite station if currently playing from your favorites list
5	Press right thumb control button	• Next local FM station • Next favorite station if currently playing from your favorites list

Media Sources

About Media Sources

You can choose from several media sources, including FM or HD Radio™, Apple Music, Audible, SiriusXM®, Spotify®, TIDAL®, and TuneIn®. You can also pair to a device with *Bluetooth*® technology and adjust the audio settings.

With Rivian Premium Audio, Apple Music and Audible offer select content in Spatial Audio with Dolby Atmos®.

> **NOTE**
> Some audio sources require the Connect+ package or a personal Wi-Fi hotspot: Apple Music, Audible, Spotify, Tidal, TuneIn.

1. Choose **Media** on the center display.
2. Open the Media Source Selector.
3. Select a media source.

Media Source Selector

The Media Source Selector is present on the center display when you select **Media** on the center display. When minimized, it displays the most recently used media source. Maximized, it displays all media sources.

1. Select **Media** on the center display to open the Media Source Selector.
2. Select the Media Source Selector to maximize it.
3. Your current favorite sources are displayed under **Favorites** at the top and any remaining media sources are in the **More** area below.
4. Press a media source to select it from either area.
5. To move a media source from More to Favorites, Favorites to More, or within the Favorites area, press and hold your selection and then drag it to where you want it.
6. In the **Favorites**, Radio and Bluetooth are the default media sources.
7. You can also switch media sources in the Media Player by selecting the logo of the currently selected media source in the lower left corner.
8. To minimize the Media Source Selector, tap the center display away from it.

Radio

1. Choose **Media** on the menu from the center display.
2. Open the Media Source Selector.
3. Choose **Radio** to listen to Rivian Digital Radio powered by iHeartRadio.
4. Choose from available stations with the tuner or station list. You can save stations by tapping the heart icon on the media player.

> **NOTES**
> - To enable HD Radio, select **More** on the media player and toggle HD Radio on.
> - The HD Radio logo lights up when you enable HD Radio.

Apple Music

You can listen to Apple Music in your vehicle in the usual way you do from your device.

> **NOTE**
> You must be a paid subscriber to use Apple Music in your vehicle.

Setup

1. Be sure the vehicle is in **P** (Park).
2. Choose **Media** on the menu from the center display.
3. Choose **Apple Music** .
4. Select **Sign in**.
5. Scan the QR code with your device to sign into your Apple account.

Listen

1. Choose **Media** on the menu from the center display.
2. Open the Media Source Selector.
3. Choose **Apple Music** .

Settings

> **NOTE**
> The vehicle must be in **P** (Park) to use Settings.

With Rivian Premium Audio, Spatial Audio with Dolby Atmos® provides an enhanced listening experience. It's on by default, but you can go to **Profile** to toggle it off. Content loads faster when Spatial Audio is off.

You can turn on Content Restrictions to remove explicit material from the menu. Go to **Profile** to toggle it on.

Turn on Dynamic Streaming Quality to adjust the streaming quality based on connectivity speed. When Dynamic Streaming Quality is turned off, Apple Music always plays the highest quality audio available for the selected song.

Turn on In-Vehicle Network Streaming for higher quality stereo playback over cellular.

Audible

Use Audible to listen to your favorite audiobooks. With Rivian Premium Audio, some titles are available with Spatial Audio with Dolby Atmos®, for an enhanced listening experience.

Setup

1. Be sure the vehicle is in **P** (Park).
2. Choose **Media** on the menu from the center display.
3. Open the Media Source Selector.
4. Choose **Audible**.
5. Select **Sign in**.
6. Scan the QR code with your device to sign into your Audible account.

Listen

1. Choose **Media** on the menu from the center display.
2. Open the Media Source Selector.
3. Choose **Audible**.
4. Choose an audiobook or podcast on the Home page.
5. Your selection displays in the media player on the right side of the screen.
6. Choose **Continue Listening** to display audiobooks or podcasts that are in progress.

> **NOTE**
> Podcasts are displayed only if you saved them previously on your Audible mobile app or on a web browser.

7. When you select an audiobook, you can view a list of all chapters you can listen to, showing the current chapter you are listening to.

> **NOTE**
> You can only access Settings and sign in when the vehicle is in Park.

SiriusXM

Connect to SiriusXM® to listen to your favorite music channels, news, sports, and podcasts. You also have access to Pandora stations within the same app.

> **NOTE**
> SiriusXM is delivered via cellular or Wi-Fi® connectivity (not satellite).

Setup

Here's how to get started.

1. Be sure the vehicle is in **P** (Park).
2. Choose **Media** on the menu from the center display.
3. Open the Media Source Selector.
4. Choose **SiriusXM** .
5. To start your SiriusXM free trial, select **Share and Start Listening** in the trial subscription panel on the center display.

Discover and Listen

The SiriusXM app appears on the center display in a grid format.

- For You: Personalized stations based on your listening preferences.
- Categories: Browse through categories including music, sports, news, and talk.
- My Collection: Press and hold a station to add it to your favorites tab. Select **Edit** to manage your favorites.
- Search: Select the microphone icon to search using voice or choose **Type with Keyboard** to enter it manually.
- Media Controls: Use the media player to view the currently playing selection and access relevant playback controls. Press the left and right CH arrows at the bottom of the media player to select channels sequentially.
- Settings: Manage your listener profiles, sports notifications, and other settings.

> **NOTE**
> The Sports category provides not only event coverage but live scores as well.

To listen to SiriusXM after your trial expires:

1. Choose **SiriusXM** in the Media app on the center display and navigate to SiriusXM.
2. Select one of the three options to subscribe to SiriusXM:
   - Text yourself a link
   - Email yourself a link
   - Or call SiriusXM directly

Spotify

> **NOTE**
> You must log in the first time you use the app.

1. Choose **Media** on the menu from the center display.
2. Open the Media Source Selector.
3. Choose **Spotify**.
4. Open your account on your phone or other device.

> **NOTE**
> Your vehicle must be in **P** (Park) and have cellular or Wi-Fi connectivity.

5. Scan the QR code to sign in.

Spotify Queue

Choose **Queue** to view the queue. To add tracks to the queue, open a playlist or album and choose **Add to Queue** next to a track. You can remove tracks from the queue.

Streaming Quality

1. Select **Profile**.
2. Choose the Spotify **Music streaming quality** setting.
3. Select from five streaming levels:
   - Automatic
   - Low
   - Normal
   - High
   - Very High

TIDAL

You can listen to Tidal in your vehicle.

With Rivian Premium Audio, Spatial Audio with Dolby Atmos® provides an enhanced listening experience when Dolby Atmos content is available.

Setup

> **NOTE**
> You must log into a paid account the first time you use the app.

1. Choose **Media** on the menu from the center display.
2. Open the Media Source Selector.
3. Choose **TIDAL**.
4. Open your account on your phone or other device.

   > **NOTE**
   > Your vehicle must be in **P** (Park) and have cellular or Wi-Fi connectivity.

5. Enter the code on your device to sign in.

TIDAL Queue

Choose **Queue** to view the queue.

Streaming Quality

1. Select **Profile**.
2. Select from four Tidal streaming levels:
   - Normal
   - High
   - HiFi
   - Master

> **NOTES**
> - Changes take effect from the next track played.
> - Downloaded content plays at the original quality.

TuneIn

> **NOTE**
> No login is required.

1. Choose **Media** on the menu from the center display.
2. Open the Media Source Selector.
3. Choose **TuneIn**.
4. Select a station to hear it.
5. Choose **Home** to view all available stations.
6. Choose **Recents**, **Favorites**, **Browse**, or **Search** to narrow the selections.

Bluetooth

1. Choose **Media** on the menu from the center display.
2. Choose the Connectivity button.
3. Choose **Bluetooth** .
4. Follow the Bluetooth pairing instructions.

Video

About Video Sources

You can choose from two video sources: Google Cast and YouTube.

> **NOTE**
> Video sources require the Connect+ package.

1. Select **Video** .
2. Select a video source on the left.

Google Cast

When you are parked, you can use Google Cast to view video content from your phone or other connected devices on the vehicle's center display and audio system.

You can connect up to eight devices at a time.

Set Up Google Cast

1. Put the vehicle in **P** (Park).
2. Go to **Video** > **Google Cast** and choose **Set it up**.
3. Select **Accept** for the Terms & Conditions and Privacy notice. You can select **Not now** to exit without setting up Google Cast.
4. Turn on the hotspot if it's off.
5. Scan the QR code to connect to the hotspot.

Use Google Cast

1. On your mobile phone, launch a Google Cast-enabled application.
2. Select **Google Cast**.
3. Select **Rivian** as the target.
4. Tap the screen anywhere to open the video control bar. Use it to:
   a. Increase or decrease volume: Choose the – and + buttons or slide
   b. Increase or decrease brightness: Choose the – and + buttons or slide
5. Other video control bar options include:
   a. Move the control bar to the bottom using the grabber button at the far left.
   b. Choose the expand button to view the top status bar and the bottom app tray.
   c. Select **EXIT** to leave Google Cast.
6. You can also disconnect from Google Cast with your phone.

YouTube

When you are parked, you can view YouTube on the center display.

> **NOTE**
> You can sign into your account in the YouTube app to access all of your personalized content and recommendations.

1. Put the vehicle in **P** (Park).
2. Go to **Video** and choose **YouTube** on the left.
3. Select **Start watching**.
4. Tap the screen anywhere to open the video control bar. Use it to:
   a. Increase or decrease volume: Choose the – and + buttons or slide
   b. Increase or decrease brightness: Choose the – and + buttons or slide
5. Other video control bar options include:
   a. Move the control bar to the bottom using the grabber button at the far left.
   b. Choose the back button to see a previous screen or to exit.
   c. Choose the expand button to view the top status bar and the bottom app tray.
   d. Select **EXIT** to leave YouTube.

> **NOTE**
> You can also watch YouTube through Rivian Assistant and Google Cast.

Launch Cam

If you want to record launch events in Launch Mode, you can set it and view the videos in the Video app.

1. To turn Launch Cam on or off, go to **Video** > **Launch Cam**.
2. Select **Record video during launch events** to turn on Launch Cam.
3. Select **Set up now**.

> **IMPORTANT**
> You must have an external storage device to use Launch Cam. This isn't necessary if you have already added a storage device for Road Cam.

4. You can select **Go to drive modes** to use Launch Mode or other drive modes.

Rivian Assistant

Overview and Setup

Meet Rivian Assistant, your AI-powered, in-vehicle assistant. Use Rivian Assistant to do the following:

- Control vehicle settings, climate control, navigation, media, messaging, and calling.
- Reference the Owner's Guide with your voice.
- Answer general knowledge or follow-up questions.
- Explain in-vehicle alerts or notifications and walk you through troubleshooting steps for vehicle concerns.

> **NOTES**
> - Rivian Assistant is only available to Connect+ subscribers.
> - Rivian Assistant is only available in English.

Opt In

To use Rivian Assistant, you must first agree to the AI Use Terms. Go to **Settings** ⚙ **> Rivian Assistant** on the center display to begin the first-time setup.

> **NOTES**
> - Your vehicle must be parked and connected to the internet in order to complete the first-time setup.
> - If you have Lock profile enabled, you may not be able to access Rivian Assistant until you enter a PIN. (See Profile Authentication.)

Activate Rivian Assistant through one of the following methods:

- Long-press the left thumbwheel on the steering wheel. (See Media Thumb Controls.)
- Tap **Rivian Assistant** on the status bar on the center display.
- Say the wake words "Okay, Rivian" or "Hey, Rivian."

When Rivian Assistant is active, a wave appears on the center display to indicate when Rivian Assistant listens, thinks, speaks, or needs additional information. The Rivian Assistant wave is a visual indicator of Rivian Assistant's activity.

Stop a command or interaction through one of the following methods:

- Press the left thumb control button on the steering wheel.
- Tap **Rivian Assistant** on the status bar.
- Tap the Rivian Assistant wave on the center display.
- Say, "Stop."

Opt Out

To stop using Rivian Assistant, go to **Settings** ⚙ **> Rivian Assistant** and toggle off **Rivian Assistant**.

Delete saved memory in Rivian Intelligence on the Rivian mobile app.

NOTES

- Memory is turned off by default.
- To learn how Rivian Assistant uses your preferences and conversations to create a more personalized in-vehicle experience, review our AI Use Terms (rivian.com/legal/ai) and Data Privacy Notice (rivian.com/privacy/notice).

Deactivate Wake Words

To deactivate the wake words, "Okay, Rivian" and "Hey, Rivian," go to **Settings** ⚙ **> Rivian Assistant** and toggle off **Activate with wake word**.

Once you deactivate the wake words, you can still use Rivian Assistant by long-pressing the left thumbwheel on the steering wheel or tapping **Rivian Assistant** on the status bar and speaking a command.

Settings and Privacy

Rivian Assistant offers customizable privacy and preference settings. Go to **Settings** ⚙ **> Rivian Assistant** to toggle on or off Rivian Assistant and manage the following settings:

Activate with wake word:

- **On:** Enables Rivian Assistant through voice commands, such as "Okay, Rivian" or "Hey, Rivian."
- **Off:** Disables "Okay, Rivian" and "Hey, Rivian" as wake words, requiring steering wheel or center display interaction to talk to Rivian Assistant.

Natural interruption:

- **On:** Enables you to interrupt Rivian Assistant without requiring a wake word, allowing a seamless and natural conversational flow. It increases Rivian Assistant's sensitivity to interruptions.
- **Off:** Requires the use of wake words to interrupt Rivian Assistant once conversation is initiated.

Keep listening:

- **On:** Enables Rivian Assistant to briefly stay active after an interaction, allowing follow-up questions without wake words, steering wheel, or center display interaction.
- **Off:** Rivian Assistant stops listening once a conversation ends.

Chattiness:

- **Minimal:** Choose **Minimal** for a more concise experience, with less conversation and detail.
- **Normal:** Choose **Normal** to receive more details while using Rivian apps or in conversation.

Phone contacts:

- **On:** Enables Rivian Assistant to temporarily upload your phone contacts to the Rivian cloud so it can assist you with placing and receiving calls and messages.
- **Off:** Disables Rivian Assistant from accessing your phone contacts.

Message notification chimes:

- **On:** Enables audible chime alerts for incoming text messages when your phone is paired to Rivian Assistant.
- **Off:** Disables audible chime alerts.

Calendar:

- **On:** Enables Rivian Assistant to connect to your Google Calendar to create, move, and navigate to events.
- **Off:** Disables Rivian Assistant's ability to access your calendar.

Precise location sharing:

- **On:** Allows precise location sharing with Rivian Assistant to provide more localized information and search results.
- **Off:** Disables precise location sharing with Rivian Assistant. Disabling location sharing may affect how Rivian Assistant interacts with navigation and other apps.

Memory:

- **On:** Enables Rivian Assistant to remember preferences and past context from your conversations so responses feel more personalized over time.
- **Off:** Disables Rivian Assistant from accessing saved memory or creating new memory.

> **NOTE**
> Stored memory is saved per driver profile. Delete stored memory in Rivian Intelligence on the Rivian mobile app.

Show history:

- **On:** Enables a live transcription of your last few interactions with the Rivian Assistant. Once enabled, Rivian Assistant's history panel is accessible by choosing **View History**.
- **Off:** No live transcription.

Phone Contact Syncing

You can use Rivian Assistant to make calls and send messages.

> **NOTE**
> Rivian Assistant doesn't currently support group texts.

To sync your phone contacts to your vehicle, do the following:

1. Follow the Bluetooth pairing instructions.
2. Choose **Allow** in the pop-up window on the center display.
3. Go to **Bluetooth** , choose **Expand** next to your device, and toggle on **Phone calls**, **Upload contacts**, and **Text messages**.
4. Go to **Settings** **> Rivian Assistant**, scroll down to Phone contacts, and select your connected device.
5. Enable text message pairing on your phone:

   > **NOTE**
   > If the Show Message Notifications setting does not appear in your Bluetooth settings, choose **More** **>** **Forget Device** on the center display. Then, repeat the steps above.

   - On iOS phones, go to **Settings > Bluetooth > Rivian Audio** and toggle on **Show Message Notifications** and **Sync Contacts**.
   - On Android phones, Bluetooth settings can vary. Confirm that text message access is enabled.
6. Allow a few minutes for your contacts to fully sync with your vehicle.
7. If connection issues occur:
   - Turn your vehicle's Bluetooth off and on.
   - Turn your phone's Bluetooth off and on.
   - Go to **Phone** **> Messages** and choose **Refresh Connection**, if available.
8. Add your most used contacts to your phone's Favorites to help Rivian Assistant find them faster.

If you have a saved phone that you want to remove, choose **Expand** and then choose **Forget Device**.

Google Calendar Syncing

You can use Rivian Assistant to create, move, and navigate to events in your Google Calendar. To add your calendar to your vehicle and the Rivian mobile app:

1. Go to **Settings** ⚙ **> Rivian Assistant**.
2. Scroll down to Calendar.
3. Use your phone's camera to scan the QR code.
4. Add your Google Calendar account to Rivian Intelligence on the Rivian mobile app.

Only one Google Calendar can be linked to each driver profile. Manage or delete existing connected calendars in the Rivian mobile app.

Ask Rivian Assistant

To learn more about Rivian Assistant's capabilities, ask Rivian Assistant "What can you do?"

Driving

Basic Vehicle Operations

Startup and Sleep

The vehicle unlocks the doors and is ready when it detects your approach, or when you unlock it with a key.

After you put the vehicle in **P** (Park) and walk away, the vehicle locks the doors and goes to sleep. Sleep is a low-power mode to preserve range.

> **NOTES**
>
> - If the vehicle detects occupancy, it remains ready and doesn't go to sleep. Occupancy can be detected by weight on the front seats.
> - The vehicle remains ready while it charges.
> - Certain features will use energy when you are away from the vehicle, such as the 120 V outlets, Gear Guard motion cam, Stay on mode in the Camping app, climate preconditioning, or Pet Comfort.

Leave the vehicle plugged in if you don't plan to drive for a long time. When parked, the vehicle uses some energy to maintain battery health. The vehicle maintains the 12 V battery system using a small amount of energy from the high-voltage battery.

Vehicle Data

Go to **Settings** ⚙ **> My R1T** on the center display to do the following:

- Name your vehicle.
- View the odometer.
- View the Vehicle Identification Number (VIN).
- View vehicle package and battery information.
- Contact Rivian.

Battery Health

To view information about the health of your vehicle's battery pack, go to **Settings** ⚙ **> My R1T** and choose **Battery** on the center display.

Name Your Vehicle

Customize your vehicle name on the center display. Go to **Settings** ⚙ **> My R1T** and select the Vehicle name field. You can also name your vehicle in the Rivian app.

> **NOTE**
> If you'd like to add emojis to your vehicle name, use the Rivian app.

Trip Data

Store data from two trips under Trip A and Trip B. Each trip tracks the following information:

- Total distance
- Duration
- Average speed
- Efficiency
- Total energy

To reset your trip data:

1. Go to **Settings** ⚙ **> My R1T** on the center display.
2. Select the trip that you want to reset.
3. Select **Reset Trip**.

Brakes

Regenerative Braking

Regenerative braking happens automatically when you lift your foot off the accelerator pedal. This captures energy and increases range. It also saves wear and tear on the brake pads.

You can choose the following regenerative braking settings from **Drive Modes** **> Regen** in the center display:

- **Standard:** Moderate regenerative braking. Standard is the default setting for all modes except Snow and Soft Sand modes.
- **High:** Stronger regenerative braking. The vehicle slows down faster and captures more energy. High is not available on Model Year 2025 and 2026 Dual Standard vehicles.
- **Low:** Limited regenerative braking. Low is the default setting for Snow and Soft Sand modes.

The brake lights automatically illuminate during regenerative braking to warn other drivers when the vehicle slows down.

NOTES

- Regenerative braking may be reduced temporarily when the vehicle battery is cold, fully charged, or almost fully charged. Press the brake pedal to slow or stop the vehicle.
- Regenerative braking assist is automatically enabled to help maintain consistent deceleration by augmenting regenerative braking when needed. It is not available when you're towing a trailer.

Anti-lock Braking System

The anti-lock braking system prevents the wheels from locking up while you press the brake pedal. This helps you maintain control of the vehicle when stopping suddenly or on slippery or low-grip surfaces.

Electronic Park Brake

When the vehicle stops, put the vehicle in **P** (Park) to engage the electronic park brake to keep the vehicle from rolling.

Gear Selection

DANGER

- Press the brake pedal and ensure the vehicle is stationary before shifting into **P** (Park), **D** (Drive), or **R** (Reverse).
- Ensure the vehicle is in **P** (Park) before you exit the vehicle.
- Follow these instructions to avoid personal injury, death, or property damage.

Use the drive stalk on the right side of the steering wheel to select a gear. The driver display shows the current gear.

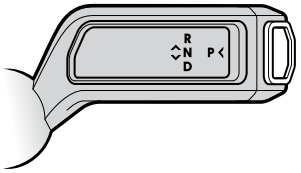

Park (P)

Push the button on the end of the drive stalk to put the vehicle into **P** (Park). Ensure the vehicle is completely stopped before shifting into **P** (Park).

You cannot shift out of **P** (Park) under the following conditions:

- A charge cable is connected to the vehicle.
- The brake isn't pressed.
- The driver isn't in the driver seat.
- An error condition exists. Check for alerts in the driver display.

Reverse (R)

Push the drive stalk all the way up and then release to put the vehicle into **R** (Reverse). Ensure the vehicle is completely stopped before shifting into or out of **R** (Reverse).

Neutral (N)

Push up the drive stalk to put the vehicle in **N** (Neutral). The vehicle can roll freely in **N** (Neutral) after you release the brake.

DANGER

If you want the vehicle to remain in place, press and hold the brake pedal so it doesn't roll.

Drive (D)

Push the drive stalk all the way down and then release it to put the vehicle in **D** (Drive). Stop the vehicle completely before you shift into **D** (Drive).

> **NOTE**
>
> Ensure the vehicle is completely stopped before changing direction from **D** (Drive) to **R** (Reverse) or **R** (Reverse) to **D** (Drive).

Exterior Lights

About Exterior Lights

The vehicle features exterior lights at the front and rear, on the sides, and in the truck bed. The headlights and taillights are on the front and rear of the vehicle.

Headlights and Taillights

Use the light switch on the lights stalk to control the headlights, taillights, and fog lights. In Auto mode, lights turn on automatically when sensors detect that it's dark outside.

- Push the light switch up to select a higher setting and turn on lights. Hold the light switch up to scroll up.
- Push the light switch down to select a lower setting and turn off lights. Hold the light switch down to scroll down.

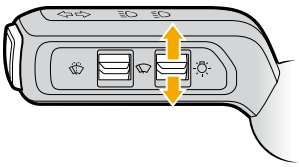

NOTES

- In winter conditions, you may need to remove snow and ice from the headlights.
- The right and left headlights are aimed in an asymmetrical pattern. This improves visibility while driving at night and minimizes the amount of light directed at oncoming drivers. If you notice reduced visibility, contact Rivian. The headlights are not user-serviceable.

The driver display shows the lights turned on or off as follows:

Icon	Name
	Lights + rear fog
	Lights
	Auto (default)
	Parking lights
	Off

If the lights are set to Lights + rear fog, Lights, or Auto, the headlights also feature the following:

- **Dynamic Steering Headlights:** Both the low beams and high beams follow the steering angle to brighten the path while you turn the vehicle.

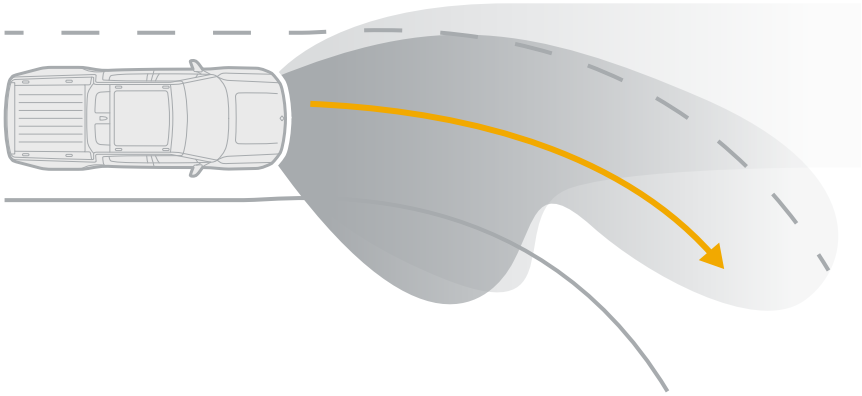

- **Dynamic Low Beams Leveling:** The low beams adjust their beam path so they project light evenly if the vehicle pitches backwards as it accelerates or pitches forward as it slows.

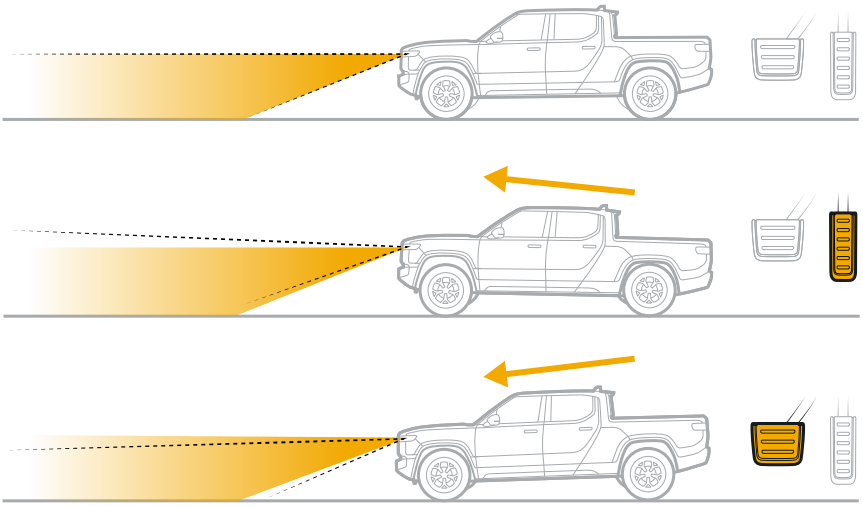

High Beams

High beams increase forward visibility in dimly lit areas.

Control the High Beams

To control the high beams manually, use the lights stalk on the left side of the steering wheel.

Use the Lights Stalk

- Pull the lights stalk toward you to turn on the high beams. High beams stay on as long as you hold the lights stalk. Release the lights stalk to turn off the high beams.
- When the low beams are already turned on, push the lights stalk away from you to turn on the high beams. Push the lights stalk away again to turn off the high beams.

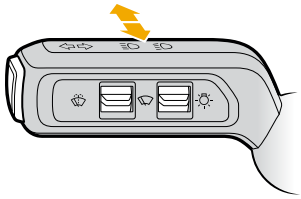

IMPORTANT

Ensure high beams are appropriate for the weather and driving conditions.

Icon	Name
	High Beams
	Adaptive High Beams Assist

Adaptive High Beams Assist

When the headlights are set to Auto, Adaptive High Beams Assist activates high beams in low-light road conditions when the vehicle doesn't detect light from road or street lighting. Adaptive High Beams Assist partially switches off high beams based on the vehicle traffic detected by the front camera. This reduces glare for drivers of oncoming or preceding vehicles.

Use Adaptive High Beams Assist

Adaptive High Beams Assist is enabled by default.

To temporarily turn off Adaptive High Beams Assist, push or pull the lights stalk. To turn on Adaptive High Beams Assist again, push the lights stalk away from you.

On the center display, go to **Settings** ⚙ **> Lighting**. Turn **Adaptive high beams assist** on or off.

Turn Signals

Use the lights stalk on the left side of the steering wheel to control the turn signals.

Lights Stalk Controls

To flash the turn signals for a lane change, lightly push the lights stalk up or down according to the direction of the lane change. The turn signals automatically stop after they flash three times.

To flash continuous turn signals, push until the lights stalk clicks. To stop the turn signals, perform one of the following:

- Move the steering wheel and complete the turn.
- Lightly push the lights stalk up or down.
- Push the lights stalk in the opposite direction of the initial turn until it clicks. This also initiates continuous turn signals for that opposite direction.

Direction of Turn

Push the lights stalk up to indicate a right turn or lane change.

Push the lights stalk down to indicate a left turn or lane change.

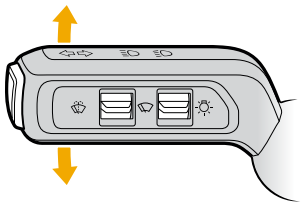

Hazard Lights

Press the **Hazard Lights** button ⚠ on the overhead console to turn on the hazard lights. Press the button ⚠ again to turn the hazard lights off. See Emergency SOS.

> **NOTE**
> Turn signals have priority over hazard lights. If the hazard lights are turned on and you push the lights stalk up or down to indicate a turn or lane change, the turn signals flash and the hazard lights turn off temporarily. After the turn signals stop, the hazard lights resume.

Roadside Lighting

Roadside lighting can animate in specific directions to help guide traffic around your vehicle. To specify the direction, use the Roadside lighting panel.

Roadside Lighting Panel

Access the Roadside lighting panel through one of the following:

- Go to **Vehicle** from the status bar of the center display to open the quick controls panel. Choose **Shortcuts** **> Roadside lighting**.

> **NOTE**
> If the vehicle is in **P** (Park), the Roadside lighting panel opens.

- Press the **Hazard Lights** button on the overhead console to turn on the hazard lights. Shift the vehicle to **P** (Park). The quick controls panel automatically appears (if it doesn't, go to **Vehicle** on the status bar of the center display). Choose the **Hazard Lights** icon .

> **NOTE**
> If the vehicle is in **P** (Park), the roadside lighting options are available.

Roadside Lighting Options

To turn on roadside lighting, choose the appropriate option. To turn off roadside lighting, choose the option again.

Icon	Name
	Pass on the left
	Go around
	Pass on the right

Choose **Close** to exit the Roadside lighting panel.

> **NOTE**
> Roadside lighting options are available only if the vehicle is in **P** (Park). If you shift the vehicle out of **P** (Park), roadside lighting automatically turns off.

Exterior Lights Settings

On the center display, go to **Settings** ⚙ **> Lighting** to access the following settings:

- **Adaptive high beams assist:** Enabled by default. To disable Adaptive High Beams Assist, go to **Settings** ⚙ **> Lighting**, and turn off **Adaptive high beams assist**.
- **Interactive lighting:** Enabled by default. You can turn this setting on or off. If enabled, the light bars react when you lock or unlock the vehicle and you can change the following settings:
  - **Light bar when charging:** Enabled by default. You can turn this setting on or off. If enabled, the light bars indicate the charging status while the vehicle charges. The light bars turn off if the vehicle is locked or sleeps while it charges.
  - **Entry lights:** Enabled by default. You can turn this setting on or off. If enabled, the entry lights turn on when you unlock the vehicle.
  - **Guide lights:** Enabled by default. You can turn this setting on or off. If enabled, the guide lights turn on at night when you lock or unlock the vehicle. Choose how long the guide lights stay turned on after you lock the vehicle.
- **Charge port light when locked:** Disabled by default. You can turn this setting on or off. The charge port light turns on while the vehicle charges. If enabled, the charge port light stays turned on after you lock the vehicle while it charges.

Interior Lights

About Interior Lights

To manually turn the cabin lights on or off, choose **Vehicle** from the status bar on the center display, or use the rear display.

To have the vehicle automatically control the cabin lights, go to **Settings** **> Lighting** on the center display. You have two options:

- **Lights on when door opens:** Choose **Lights on when door opens** to automatically turn on the cabin lights in any row with an open door during low-light conditions.
- **Lights on when you park:** Choose **Lights on when you park** to automatically turn on the cabin lights when you shift the vehicle into **P** (Park) in low-light conditions.

You can adjust the brightness of the overhead lights.

> **NOTE**
> To lock the rear display so rear-cabin passengers can't control the cabin lights, go to **Vehicle** on the status bar on the center display. Choose **Shortcuts** **> Rear display lock**.

Reading Lights

Use touch to control the reading lights.

Touch once to turn on at partial brightness. Touch a second time to increase brightness and a third time to turn off.

Reading lights are located in the following areas:

- Overhead console between the driver and passenger seats
- Sides above the door area for the rear seats

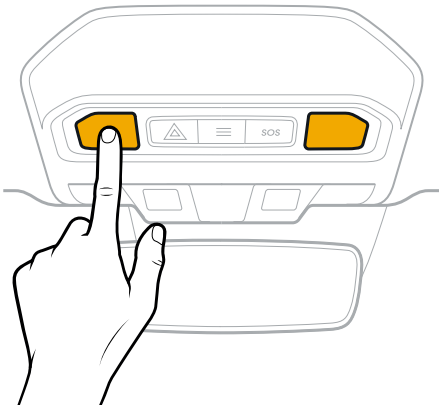

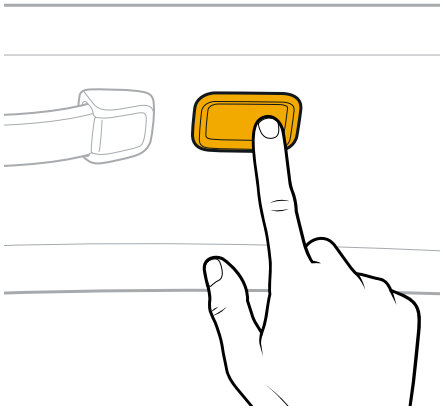

Accent Lights

Accent lights are located in the following areas:

- Front footwells
- Door pockets
- Dashboard
- Center console
- Door trim

To turn accent lights on or off, go to **Settings** ⚙ **> Lighting** on the center display.

When the accent lights are turned on, you can adjust their brightness.

Interior Lights Controls

Center Display

Choose **Vehicle** 🚗 from the status bar on the center display.

Choose **Lights** 💡 to turn the corresponding lights on or off.

Rear Display

Choose **Lights** 💡 to turn the rear cabin lights on or off.

Interior Lights Settings

Go to **Settings** ⚙ **> Lighting** on the center display to access the following controls and settings:

- **Accent lighting:** Turn accent lights on or off.
  - **Accent lighting theme:** You can choose a different lighting theme to change the color of the accent lights.

    Choose the current theme; a panel appears and displays more options. Choose a different theme to preview it.

    By default, the vehicle also plays the corresponding audio; you can choose **Volume** 🔈 to mute it.
  - **Accent lighting brightness:** When the accent lights are turned on, use the slider to adjust their brightness.
- **Overhead light brightness:** Use the slider to adjust the brightness of the overhead lights.
- **Lights on when door opens:** Turn **Lights on when door opens** on or off. If Lights on when door opens is turned on, the vehicle automatically turns on the cabin lights in any row with an open door during low-light conditions.
- **Lights on when you park:** Turn **Lights on when you park** on or off. If Lights on when you park is turned on, the vehicle automatically turns on the cabin lights when you shift the vehicle into Park in low-light conditions.

Steering Wheel

Thumb Controls

The two multi-functional thumb controls on the left and right sides of the steering wheel are contextual. Their behaviors depend on the screen you're viewing. For example, use the thumbwheel to scroll among and select items on the display. Press the left and right thumb control buttons to either side of the thumbwheel to execute certain actions.

The left thumb controls are often used with the media, FM radio, and phone apps.

The right thumb controls can be used to interact with Autonomy features.

NOTES

- On the left side of the steering wheel, long-press the left or right thumb control buttons (4 and 5) to cycle through the following on the driver display:
  - media or phone
  - efficiency graph
  - tire pressure displays
  - navigation map
- On the right side of the steering wheel, press the thumbwheel while driving to switch between "autonomy view" and "maps and navigation view."

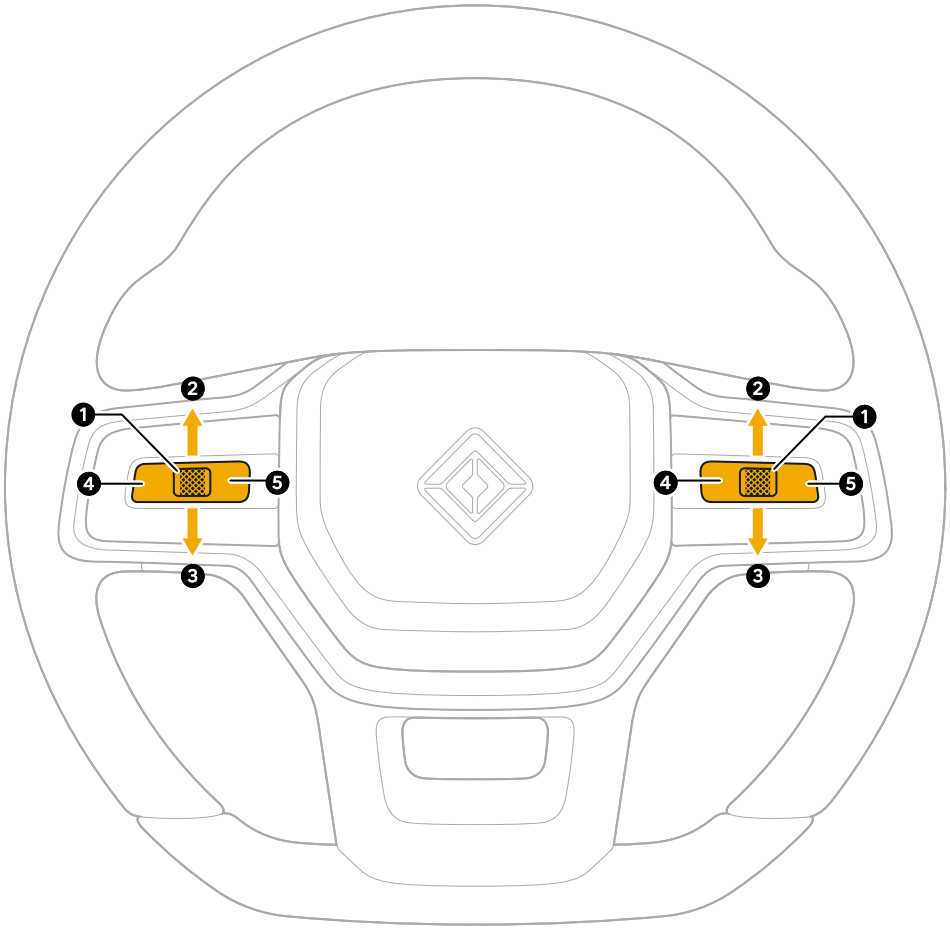

Item	Description
1	Thumbwheel
2	Scroll up
3	Scroll down
4	Left thumb control button
5	Right thumb control button

Adjust the Steering Wheel

Use the Driver Profile button at the top of the center display to adjust the steering wheel. The left thumbwheel adjusts the reach, and the right thumbwheel adjusts the height.

Thumb Control	Action	Result
Left	Scroll up	Move steering wheel away
Left	Scroll down	Move steering wheel closer
Right	Scroll up	Raise steering wheel
Right	Scroll down	Lower steering wheel

- Choose **Remember** on the center display to keep your settings as part of your driver profile.
- Choose **Restore** to return the steering wheel to the last saved position.

Horn

Press the Rivian logo at the center hub of the steering wheel to honk the horn. The horn can function even when the vehicle is powered off.

Stalks

Locate the drive stalk to the right of the steering column. Use it to select a gear, set cruise control, and select Autonomy features.

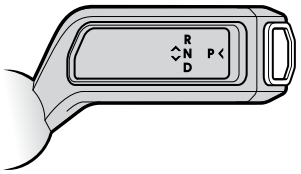

Locate the lights stalk to the left of the steering column. Use it to control the lights, high beams, turn signals, and windshield wipers.

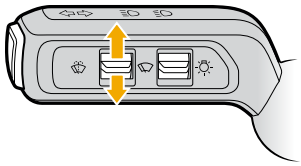

Wipers

Windshield Wipers

Use the wiper switch on the lights stalk to control the windshield wipers. In **Auto** Ⓐ mode, the wipers turn on and off automatically when rain is detected on the windshield.

- Push the wiper switch up to step up through the windshield wiper modes. Hold the wiper switch up to jump to Storm mode.
- Push the wiper switch down to step down through the windshield wiper modes. Hold the wiper switch down to turn wipers off.

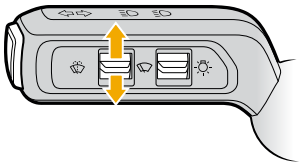

The driver display shows the windshield wiper modes.

Icon	Wiper Speed
////	Storm
//	Downpour
•••	Shower
••	Drizzle
•	Sprinkle
Ⓐ	Auto
⊘	Off

In Auto Ⓐ mode, you can adjust sensitivity levels. See Automatic Windshield Wipers.

Auto	Auto - high sensitivity
Auto	Auto - medium sensitivity
Auto	Auto - low sensitivity

CAUTION

- In cold weather, clear the windshield of any snow and ice, and fully defrost it before you turn on the wipers. If the wipers are frozen to the windshield, this could cause damage to the wipers and wiper motors.
- Don't wax, wash, or coat the windshield with products containing water repellent. These products can affect rain detection, preventing the Auto wiper function from working correctly.

Automatic Windshield Wipers

To adjust the sensitivity of automatic windshield wipers to wipe more or less frequently, use the wiper switch to cycle through the windshield wiper modes and select **Auto** Ⓐ on the driver display. Adjust the wiper sensitivity by cycling through Auto mode.

- Push up on the wiper switch to increase windshield wiper sensitivity.
- Push down on the wiper switch to decrease windshield wiper sensitivity.
- When **Auto** Ⓐ is selected, the vehicle stores your last windshield wiper sensitivity level when the menu on the driver display closes.

The driver display shows the windshield wiper sensitivity levels.

Auto on	Sensitivity icon	Description
A	Auto	Auto - high sensitivity
	Auto	Auto - medium sensitivity
	Auto	Auto - low sensitivity

NOTES

- To avoid splashing passengers when entering or exiting the vehicle, the windshield wipers temporarily pause while the vehicle is in **P** (Park) and either front door is open. Wipers resume when the doors are closed or the vehicle is not in **P** (Park).
- When outside temperatures are near or below freezing, Auto wipers may not operate until you start driving.
- Auto wipers do not operate in Car Wash mode.

Windshield Washers

Press and hold the washer button to wash the front windshield. Release the button to stop spraying washer fluid.

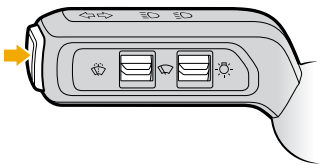

NOTE

Quickly press and release the washer button to do a single wipe with no washer fluid.

Driver Profile Settings

Seat, Steering Wheel, and Mirrors

Save driver seat, steering wheel, and side mirror positions in your driver profile on the center display.

1. Go to your driver profile.
2. Set your preferred driver seat, steering wheel, and side mirror positions.
3. Choose **Remember** to save the settings.

When you open the driver door, the vehicle detects your digital key, phone key, or key fob, loads your driver profile, and moves the seat, steering wheel, and side mirrors into their saved positions.

To apply these saved positions from inside the vehicle, do the following:

1. Shift the vehicle into **P** (Park).
2. Go to your driver profile and choose **Restore**.

NOTES

- Press the leftmost control button on the steering wheel or actuate one of the driver seat controls to stop all automatic adjustments in progress.
- You cannot apply these settings while driving.
- Driver profile won't load with a key card.

Favorite Media App

The vehicle saves last used media apps in the driver profile. When it recognizes a Rivian ID at the start of a drive, the saved media app from the previous drive loads automatically.

NOTE

For Connect+ subscribers, saved apps include Spotify®, Apple Music, Audible, TIDAL®, and TuneIn®.

Driving Controls

Status Indicators

Function Check

After a restart, the vehicle performs a function check. All status indicators light up for a few seconds on either the driver display or the center display when you press the brake or hold the brake to shift out of **P** (Park).

Status indicators are often paired with a notification that explains the indicator and may provide some troubleshooting steps. Notifications disappear from the display screens after a set time. You can access the more critical notifications that require attention by choosing **Notifications** from the status bar at the top of the center display. A yellow dot on **Notifications** indicates that there are active notifications for you to review.

DANGER

If any of the "malfunction" or "system failure" lights stay on or appear after the initial function check, it may be unsafe to operate the vehicle, and the vehicle may not be drivable. Contact Rivian to have the vehicle inspected.

Airbags and Seat Belts

Icon	Name	Description	Location	Active State
	Airbag Malfunction	The airbag system isn't working properly.	Driver display	Solid red
PASSENGER AIRBAG OFF	Passenger Airbag Off	The passenger airbag system is disabled.	Center display	Solid yellow
	Seat Belt Reminder	The driver, front passenger, and/or at least one rear seat belt isn't fastened.	Driver display	Solid or flashing red
	Seat Belt Indicator	The seat belt indicator is visible if occupied seats are unbelted.	Driver display	Solid white circle (unoccupied seat) Solid grey circle (buckled seat) Solid red X (unbuckled seat)

Battery

Icon	Name	Description	Location	Active State
	12 V Battery Warning	The 12 V battery needs to be serviced or replaced.	Driver display	Solid red (replace) Solid yellow (service)
	Traction Battery Failure	The traction battery isn't working properly.	Driver display	Solid red (replace) Solid yellow (service)
	Low Battery	The battery level is low.	Driver display	Solid yellow
	Low Battery Warning	The battery level is nearly out of charge.	Driver display	Solid red
	Electric Motor Failure	The electric motor is faulted.	Driver display	Solid red

Brakes

Icon	Name	Description	Location	Active State
ABS	Anti-lock Braking System (ABS) Malfunction	The ABS isn't working properly.	Driver display	Solid yellow
BRAKE	Brake System Malfunction	The brake system isn't working properly.	Driver display	Solid red
PARK	Parking Brake On	The parking brake is on.	Driver display	Solid red
(P)	Parking Brake System Malfunction	There is a malfunction in wiring external to the electronic control unit for the parking brake.	Driver display	Flashing red
	Limited Regenerative Braking	Regenerative braking may be limited. The capability returns as the level of charge decreases.	Driver display	Solid yellow
(H)	Vehicle Hold On	The vehicle hold is on, allowing the vehicle to automatically stay still without applying the brake. This appears as a large image on the driver display.	Driver display	Solid color (active state color varies, depending on mode)
(H)	Vehicle Hold Malfunction	The vehicle hold system isn't working properly. This appears as a small icon at the bottom of the driver display.	Driver display	Solid yellow

Cabin and Visibility

Icon	Name	Description	Location	Active State
R N P D	PRND	Indicates which gear the vehicle is in: **P** (Park) **R** (Reverse) **D** (Drive) **N** (Neutral)	Driver display	Solid (Active state color varies, depending on day or night mode.)
	Rear Window Defrost/Defog	The rear window defrost/defog is on.	Center display	Solid red when on Solid white when off
	Rear Window Defrost/Defog Malfunction	The rear window defrost/defog system isn't working properly.	Center display	Solid yellow
	Windshield Defrost/Defog	The windshield defrost/defog is on.	Center display	Solid red when defrost on Solid blue when defog on Solid white when off
	Turn Indicators	The turn signal is on in one direction (one flashing indicator), or hazard lights are on (both flashing simultaneously). Fast flashing indicates that a bulb is out.	Driver display	Flashing green

Closures

Icon	Name	Description	Location	Active State
	Charge Port Door Malfunction	The charge port door isn't working properly.	Driver display	Solid red
	Door Ajar Indication	One or more vehicle doors aren't fully closed. When this indicator appears, the image shows which doors are open.	Driver display	Solid red
	Driver Door Malfunction	The driver door isn't working properly.	Driver display	Solid red
	Passenger Door Malfunction	The passenger door isn't working properly.	Driver display	Solid red
	Left Rear Door Malfunction	The left rear door isn't working properly.	Driver display	Solid red
	Right Rear Door Malfunction	The right rear door isn't working properly.	Driver display	Solid red
L	Left Gear Tunnel Door Open	The vehicle is in **D** (Drive) or **P** (Park) with the left Gear Tunnel door open.	Driver display	Solid red
R	Right Gear Tunnel Door Open	The vehicle is in **D** (Drive) or **P** (Park) with the right Gear Tunnel door open.	Driver display	Solid red
	Left Gear Tunnel Door Malfunction	The left Gear Tunnel door isn't working properly.	Driver display	Solid red
	Right Gear Tunnel Door Malfunction	The right Gear Tunnel door isn't working properly.	Driver display	Solid red
	Hood Ajar	The hood isn't fully closed.	Driver display	Solid red
	Hood Malfunction	The hood isn't working properly.	Driver display	Solid red
	Tailgate Open	The tailgate isn't fully latched.	Driver display	Solid red
	Tailgate Malfunction	The tailgate isn't working properly.	Driver display	Solid red

Electronic Stability Control

Icon	Name	Description	Location	Active State
	Electronic Stability Control (ESC) System On	The ESC system is active, improving traction by providing anti-skid support.	Driver display	Flashing yellow
OFF	Electronic Stability Control (ESC) System Off	The ESC system has been turned off.	Driver display	Solid yellow
	Electronic Stability Control (ESC) System Malfunction	The ESC system isn't working properly.	Driver display	Solid yellow
	Electronic Power Steering System Malfunction	The Electronic Power Steering System feature isn't working properly.	Driver display	Solid red when the electronic power steering system is severely impacted Solid yellow when the electronic power steering system is moderately impacted

Lights and Wipers

Icon	Name	Description	Location	Active State
	Automatic Windshield Wiper	The front wipers are being automatically controlled.	Driver display	Solid green
	Automatic Windshield Wiper Mode Malfunction	The automatic windshield wipers aren't working properly.	Driver display	Solid red
	Windshield Washer Fluid Low	The windshield washer fluid level is low.	Driver display	Solid yellow
	Wiper Malfunction	The wiper system isn't working properly.	Driver display	Solid red
	Adaptive High Beams Assist	The high beam headlights turn on and off automatically for oncoming traffic.	Driver display	Solid blue when on Solid grey when off
	High Beams	The high beam headlights are on.	Driver display	Solid blue
	Low Beams	The low beam headlights are on.	Driver display	Solid green when active
	Rear Fog Lights	The rear fog lights are on.	Driver display	Solid yellow
	Marker Lights	The vehicle lighting system is on, specifically marker lighting.	Driver display	Solid green

Autonomy Faults and Warnings

Icon	Name	Description	Location	Active State
	Automatic Emergency Braking Off (AEB)	AEB is turned off.	Driver display	Solid yellow
	Automatic Emergency Braking Malfunction (AEB)	AEB isn't working properly.	Driver display	Solid yellow
	Blind Spot Warning Malfunction (BSW)	BSW isn't working properly.	Driver display	Solid yellow
	Forward Collision Warning Off (FCW)	FCW is off.	Driver display	Solid yellow
	Forward Collision Warning Malfunction (FCW)	FCW isn't working properly.	Driver display	Solid yellow
	Lane Departure Warning (LDW)	LDW isn't working properly.	Driver display	Solid yellow

Other Faults and Warnings

Icon	Name	Description	Location	Active State
	AWD Malfunction	The AWD feature isn't working properly.	Driver display	Solid yellow for moderate issues Solid red for critical issues
	Hydraulic Suspension Malfunction	The hydraulic suspension isn't working properly.	Driver display	Solid yellow for moderate issues Solid red for critical issues
	Alert	There is a general fault.	Driver display	Solid yellow for moderate issues Solid red for critical issues
	Key Fob Battery Missing	The key fob is missing.	Driver display	Solid red
	Key Fob Battery Low	The key fob battery level is low.	Driver display	Solid yellow indicates that the key fob battery is 20% Solid red indicates that the key battery is 10%
	Lock Malfunction	The vehicle locks aren't working properly.	Driver display	Solid red

Icon	Name	Description	Location	Active State
	Low Tire Pressure	One or more tires have low tire pressure.	Driver display	Solid yellow
	Tire Pressure Monitoring System (TPMS) Malfunction	TPMS system isn't working properly.	Driver display	Flashing yellow then solid
	Ride Height Malfunction	Ride height isn't working properly.	Driver display	Solid yellow for moderate issues Solid red for critical issues
SOS	SOS	An emergency call is active.	Driver display	Solid white when an SOS call isn't active Solid red until the SOS call is complete
	System Failure	One or more system failures.	Driver display	Solid red
	Limited Performance Mode	Vehicle drive power is limited.	Driver display	Solid yellow

Power Gauge

Power gauge shows the overall power available, the power currently used to accelerate the vehicle, and the deceleration rate.

- The top half of the gauge represents the vehicle's acceleration, shown in blue.
- The bottom half shows the deceleration rate in green, a combined value of regenerative braking and any supplemental braking from Regenerative Braking Assist.

Power Gauge communicates any restrictions in propulsion or regenerative braking due to environmental conditions or vehicle system faults. It may also show a propulsion limitation when the battery is low.

Regenerative Braking Assist is an automatically enabled feature that helps create a smoother driving experience with more consistent deceleration by augmenting regenerative braking when needed.

The power gauge appears on the driver display when you shift out of **P** (Park). Different icons appear based on the conditions described below.

Icon	Name	Description
	Cold Weather	The snowflake appears with a unique notification because of cold weather impact. Low temperatures may limit propulsion. Regenerative braking may also be limited if Regenerative Braking Assist is disabled.
	Limited Regenerative Braking	The regenerative braking telltale appears when regenerative braking may be limited. Regenerative braking may feel limited at higher speeds, but not be very noticeable. The capability returns as the level of charge decreases. Regenerative Braking Assist reduces the frequency of this scenario.

NOTE

The scenarios below are based on display priority. They assume that Regenerative Braking Assist is malfunctioning or temporarily disabled, such as when the brakes get too hot.

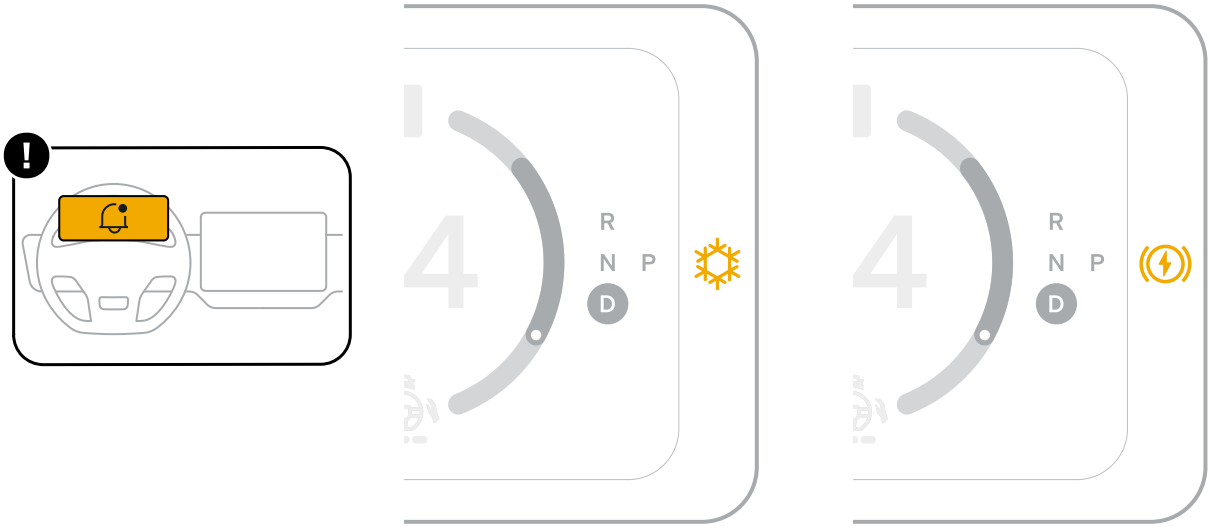

Vehicle Hold

Vehicle Hold brings the vehicle to a stop and holds it stationary without you needing to press the brake pedal. You'll see a Hold icon on the driver display when this feature is on.

If the feature malfunctions, the Vehicle Hold Malfunction status indicator appears at the bottom of the driver display, accompanied by a notification on the center display.

If you take your foot off the accelerator pedal but don't brake, the vehicle slows down and then stops. After 10 minutes, the vehicle automatically shifts into **P** (Park) and engages the electronic park brake. Select a gear to drive again.

When Vehicle Hold is active, the vehicle shifts into **P** (Park) if you exit the vehicle.

> **NOTE**
> To release Vehicle Hold while in **N** (Neutral), press the brake pedal.

Vehicle Hold Not Available

> **CAUTION**
> If the Vehicle Hold feature isn't available, or if you're on a steep grade where Vehicle Hold can't engage, a notification appears on the center display. In these cases, take control by using the brake pedal to bring the vehicle to a stop, and shift to **P** (Park) before you exit the vehicle. See Emergency Deceleration if normal braking functions don't work.

Vehicle Hold Error

> **CAUTION**
> If an error happens while the vehicle is stationary due to Vehicle Hold, the vehicle automatically shifts itself to **P** (Park).
>
> If an error happens three consecutive times when you attempt to shift out of **P** (Park), Vehicle Hold is disabled. Contact Rivian.

Emergency Deceleration

If the brakes don't work properly, press and hold the **P** (Park) button to immediately decelerate. An emergency deceleration notification appears on the driver display.

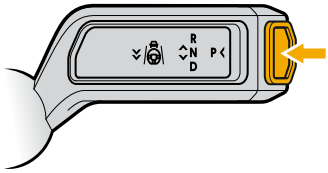

NOTES

- Continue to hold the **P** (Park) button to bring the vehicle to a stop. If the vehicle reaches a standstill, it automatically shifts into Park and applies the parking brake.
- Release the **P** (Park) button to stop deceleration.
- If you press the accelerator pedal while the emergency deceleration is in progress, the emergency deceleration stops.

Electronic Stability Control

The Electronic Stability Control (ESC) system helps the driver maintain vehicle control with the brake system, especially on low-grip surfaces. Electronic Stability Control provides anti-skid support and helps prevent loss of vehicle control.

Traction Control System

The Traction Control System (TCS) adjusts the motor and brake output to optimize vehicle traction and limit wheel slip or spin.

Stability Settings

The Stability settings adjust the Electronic Stability Control system and the Traction Control System. You can choose Stability settings manually from **Drive Modes** on the center display. (Read more about stability settings.)

NOTES

- At the start of your trip, the Electronic Stability Control System and Traction Control System are set to On.
- If you set the system to Reduced or Off, it will default back to On at vehicle restart.
- An indicator appears on the driver display when Stability is Reduced or Off.

WARNING

- Keep Stability on in most driving conditions. Electronic Stability Control and Traction Control optimize vehicle traction and provide anti-skid support.
- Turning off Stability disables both Electronic Stability Control and Traction Control. You must confirm that you want to turn off Stability. Once you leave the vehicle, you may be prompted to confirm the Stability mode.
- In certain environments and driving situations, it may be desirable to turn off Stability. However, if you disable or reduce Electronic Stability Control or Traction Control, this may lead to a loss of control or result in a crash.

Indicator	System Status	Indicator State
	Electronic Stability Control (ESC) System Active	Flashing yellow
	Electronic Stability Control (ESC) System Malfunction	Solid yellow
OFF	Electronic Stability Control (ESC) System Off or Reduced	Solid yellow

Display Screens

Center Display

About the Center Display

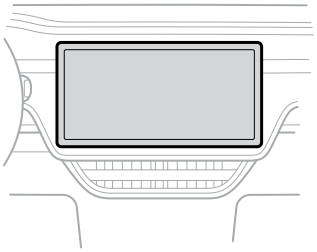

The center display is a touch screen located at the center of the instrument panel.

To set your screen brightness to automatically adjust to ambient light, do the following:

1. On the center display, go to **Settings** ⚙ **> Displays**.
2. Choose **Auto adjust brightness** near the brightness slider.
3. With Auto turned on, use the brightness slider to manually adjust the brightness level with an offset relative to the ambient light. The brightness level continues to automatically adjust, with your offset, until you turn off Auto.

WARNING

If the center display becomes too hot to touch, it alerts you with a message. This can occur when the vehicle cabin temperature rises. Wait until the screen cools before touching the center display.

NOTES

- If the center display has been used to unlock the vehicle while it isn't parked, the vehicle will relock itself after 10 seconds.
- When the vehicle is traveling above a certain speed, the lock and unlock controls aren't available on the center display.

Display Settings

Units

Go to **Settings** ⚙ **> Units** on the center display to customize the units of measure settings.

- **Range in driver display:** For the driver display, select **miles**, **%**, or **both**.
- **Time format:** Select **12-hour** or **24-hour**.
- **Units:** Select **Imperial**, **Metric**, or **Custom** to show a mix of both.
- **Speed:** Select **mph** or **km/h**.
- **Distance:** Select **mi** or **km**.
- **Weight:** Select **lb** or **kg**.
- **Temperature:** Select **°F** or **°C**.
- **Pressure:** Select **psi**, **kPa**, or **bar**.

Language

Go to **Settings** ⚙ **> Language** on the center display to customize the language choices in the vehicle, such as text on the display screens and voice-guided language.

App Launcher

The app launcher is located at the bottom-center of the center display.

- Choose any app in the tray or expanded menu to launch it.
- Swipe the app tray up or down to show or hide the expanded app menu. You can also choose **More** to view more apps, or tap any area outside the expanded app menu to close it.

For quick access to your favorites, you can customize which apps appear in the tray, and in what order, by doing the following:

- Press and hold a favorite in the app tray and drag it to another slot to reorder. You can also choose **Edit** on the expanded app menu to rearrange your apps, and choose **Done** when finished.
- From the expanded app menu, press and hold an app and drag it down to one of the slots in the app tray to replace an existing favorite.

With the expanded app menu exposed, you can drag up a favorite app from the tray to the expanded menu to reduce the number of favorite slots.

> **NOTES**
> - The vehicle must be in **P** (Park) for you to change the app ordering.
> - If the "Show recent app" toggle is set to "on" in Edit mode for the expanded app menu, your most recently used app is shown to the right of the app tray next to the **More** button.
> - New features appear in the app menu with a yellow icon next to them.

Quick Controls

The quick controls panel gives you instant access to commonly used vehicle controls from the center display, such as doors, lights, and exterior mirrors.

1. Choose **Vehicle** on the center display to show or hide the quick controls panel. You can also swipe in from the left or right edges of the screen to show the panel, or swipe in the opposite direction to hide it.
2. Choose **Shortcuts** on the quick controls panel for more vehicle controls.

> **NOTE**
> By default, the quick controls panel appears when you shift the vehicle to **P** (Park). Go to **Settings** > **Access** to change this behavior.

Driver Display

About the Driver Display

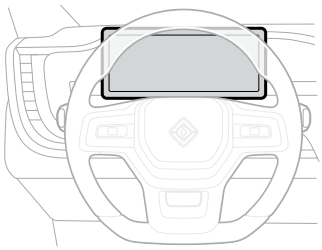

The driver display, which isn't a touch screen, is located behind the steering wheel. It displays information relevant to the driver, including:

- Speed
- Current gear
- Drive mode, ride height, and range indicators
- Status indicators
  - Provide information about the current state of your vehicle
- Power gauge
  - Shows overall power available
  - Appears when you shift the vehicle out of **P** (Park)
- Efficiency graph
  - Displays real-time information about vehicle energy usage
- Tire pressure display
- Media options
- Preferred views
  - Maps and Navigation view
  - Autonomy view for a 360-degree view of surrounding lanes and vehicles

> **NOTE**
> See Thumb Controls for ways to cycle through the different display options, such as the efficiency graph, tire pressure displays, and navigation map.

Driver Display Indicators

The drive mode, ride height, and range indicators appear on the driver display.

Indicator	Description
	Current drive mode (All-Purpose shown here)
	Current ride height
	Remaining range in miles

Rear Display

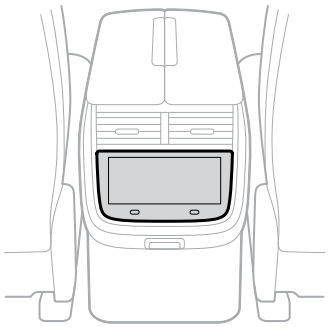

The rear display is a touch screen located at the back of the center console. It shows the climate settings for passengers in the second row and lets them adjust their vents and heated seats. The rear display also allows passengers limited functions to basic vehicle controls and media (including Wi-Fi hotspot and *Bluetooth*® connection), as well as view trip progress for an active navigation session.

NOTES

- You can lock out the rear display from the center display.
- If the rear display is used to unlock the vehicle while it isn't parked, the vehicle relocks itself after 3 seconds.
- When the vehicle is traveling above a certain speed, the lock and unlock controls aren't available on the rear display.

Drive Modes

About Drive Modes

Drive modes optimize your vehicle's driving experience by adjusting the suspension, propulsion system, and accelerator response. Drive mode availability depends on your vehicle's motor type.

Go to **Drive Modes** and choose from the following drive modes to optimize your vehicle's performance for various road conditions and driving activities:

Model Years 2025-2026

Quad	Tri	Performance Dual	Dual with All-Terrain Package	Dual
All-Purpose	All-Purpose	All-Purpose	All-Purpose	All-Purpose
Sport	Sport	Sport	Sport	Sport
Conserve	Conserve	—	—	—
Snow	Snow	Snow	Snow	Snow
All-Terrain	All-Terrain	All-Terrain	All-Terrain	All-Terrain
Soft Sand	Soft Sand	Soft Sand	Soft Sand	—
Rock Crawl	Rock Crawl	—	—	—
Rally	Rally	Rally	Rally	—
Drift	Drift	—	—	—

Model Year 2027

Quad	Performance	Premium with Performance Upgrade	Premium
All-Purpose	All-Purpose	All-Purpose	All-Purpose
Sport	Sport	Sport	Sport
Conserve	Conserve	—	—
Snow	Snow	Snow	Snow
All-Terrain	All-Terrain	All-Terrain	All-Terrain
Soft Sand	Soft Sand	Soft Sand	—
Rock Crawl	Rock Crawl	—	—
Rally	Rally	Rally	—
Drift	Drift	—	—

You can further customize the stability, ride feel, brake regen, and ride height settings for each drive mode. Choose **Reset** to go back to the default settings for the current drive mode.

On-Road Drive Modes

Icon	Drive Mode	Description
	All-Purpose	All-Purpose mode maximizes comfort for daily driving. As the most versatile mode, All-Purpose is recommended in all on-road conditions, including rainy weather. This mode keeps the vehicle at Standard ride height for city driving, and changes to Low ride height at highway speeds for better aerodynamics and increased range. See Ride Height to customize this setting. **NOTES** • In Premium or Dual vehicles, All-Purpose mode automatically switches to front-wheel drive when conditions allow to save energy and maximize range. • In Premium or Dual vehicles, the drive mode resets to All-Purpose after 4 hours since your last drive. • In Performance, Tri, and Quad vehicles, the drive mode resets to All-Purpose after 4 hours since your last drive if you were in an off-road drive mode.
	Sport	Sport mode prioritizes on-road vehicle performance and a responsive driving experience. Sport mode stiffens and lowers the suspension for optimal responsiveness and handling. The vehicle stays in all-wheel drive for maximum power transfer between tires and pavement.
	Conserve	Conserve mode automatically switches between front-wheel drive and all-wheel drive when conditions allow to save energy and maximize range.
	Snow	Snow mode maximizes confidence and control on roads and highways with snow, slush, or ice. A relaxed pedal response and reduced regenerative braking allow for more precise control on low-grip surfaces. Like All-Purpose, this mode keeps the vehicle at Standard ride height for city driving, and changes to Low ride height at highway speeds. See Ride Height to customize this setting. **NOTE** To go off road in snow, use **All-Terrain** mode.

Off-Road Drive Modes

NOTE

Drive mode availability depends on your vehicle's motor type.

Icon	Drive Mode	Description
	All-Terrain	All-Terrain mode prioritizes off-road vehicle performance and capability. All-Terrain mode is a versatile mode for moderate off-road conditions. This mode increases the ride height and softens the suspension for a smoother ride. Learn more about off-road driving.
	Soft Sand	Soft Sand mode maximizes vehicle performance and capability in deep sand. This mode uses unique traction control settings, minimal stability control support, and reduced regenerative braking to optimize vehicle handling.
	Rock Crawl	Rock Crawl mode sets the ride height to High, balancing stability with maximum clearance. It applies the ideal amount of power from each motor to each wheel as you traverse large obstacles. You can turn off Hold in Rock Crawl mode.
	Rally	Rally mode tunes the vehicle for higher off-road speeds on gravel roads. This mode puts the vehicle in Standard ride height and reduces traction control.
	Drift	Drift mode allows more slide while off-road in snow, sand, and loose dirt. This mode delivers increased power to the rear axle while reducing power to the front axle. Traction control is also reduced.

Launch Mode

Model Years 2025-2026

Launch mode provides maximum off-the-line acceleration and race stats for 0-60 mph (0-100 km/h) and quarter-mile race times. Launch mode is designed for use on a closed circuit track in dry road conditions and is available on Performance Dual, Tri, and Quad vehicles.

Model Year 2027

Launch mode provides maximum off-the-line acceleration and race stats for 0-60 mph (0-100 km/h) and quarter-mile race times. Launch mode is designed for use on a closed circuit track in dry road conditions and is available on Premium with Performance Upgrade, Performance, and Quad vehicles.

DANGER

- Distracted or unsafe driving at high speed can cause you to lose control of the vehicle and endanger your safety and the safety of others. It is your responsibility to drive safely and pay attention to the road.
- Launch mode should only be used by a skilled driver in a safe and controlled environment. Never use Launch mode on public roadways, or where traffic or pedestrians are present.
- Before activating Launch mode, ensure that no people or objects are under or in the path of the vehicle.
- Failure to follow these warnings can result in property damage, serious injury, or death.

To activate Launch mode:

1. Go to **Drive Modes** and choose **Sport** mode.
2. Choose **Launch** mode.
3. Swipe up on the **Prepare for launch** control.
4. Follow the prompts on the driver display to proceed.

Launch Cam

You have the option to record your use of Launch mode on Performance, Tri, or Quad vehicles.

To turn Launch Cam on or off, go to **Video** **> Launch Cam**.

After the vehicle records a Launch Cam video, the center display offers two options:

- **Show me:** Choose **Show me** to view the video.
- **Do this later:** Choose **Do this later** to cancel and view the video later in the Video app.

RAD Tuner Mode

With Rivian Adventure Department (RAD) Tuner mode, you can fine-tune vehicle dynamics settings to create your own custom drive modes on Quad vehicles.

DANGER

- When you use RAD Tuner, Rivian cannot guarantee the safety or performance of all configurations available in the vehicle dynamic settings. For example, some setting combinations may result in decreased performance or range efficiency, while other combinations may result in an increased risk of rollover, loss of control, or vehicle damage.
- RAD Tuner should only be used by a skilled driver, someone who is knowledgeable about the vehicle dynamics settings. Become familiar with RAD Tuner starting with small changes at low speeds. It is your responsibility to select the appropriate vehicle dynamic settings for your road conditions and drive within your capabilities. Never use RAD Tuner if you do not know how it may affect your vehicle's safety or performance.
- Although the Electronic Stability Control (ESC) status indicator remains lit when you use RAD Tuner, vehicle stability can greatly decrease with certain RAD Tuner settings. This reduced stability can increase the risk of rollover, and may lead to loss of control or result in a crash. Drive with caution.
  When you activate RAD Tuner, Electronic Stability Control (ESC) may be reduced or disabled, depending on the settings selected. Selecting **On** for the Stability setting activates Electronic Stability Control; selecting **Off** for the Stability setting disables Electronic Stability Control; and selecting **Reduced** for the Stability setting reduces Electronic Stability Control. Reducing or disabling Electronic Stability Control may lead to a loss of control or result in a crash. Drive with caution.
- Failure to follow these warnings can result in property damage, serious injury, or death.

CAUTION

- When you use RAD Tuner, the vehicle's durability may be reduced (depending on the settings selected). Reduced durability may cause components to wear more quickly than expected and cause vehicle damage over time.
- Damage caused by use of RAD Tuner is not covered by the New Vehicle Limited Warranty.

Create a Custom Drive Mode from an Existing Drive Mode

1. Go to **Drive Modes** on the center display.
2. Choose the **RAD Tuner** tab next to Gauges.
3. Choose **Customize** to edit a drive mode.
4. Use the sliders to adjust the settings. Adjustments are automatically saved.

Create a Custom Drive Mode from Scratch

1. Go to **Drive Modes** on the center display.
2. Choose **RAD Tuner Presets** .
3. Choose **Add** ⊕.
4. Use the sliders to adjust the settings.

Change a Custom Drive Mode

For each custom drive mode, you have the following options:

- **Rename:** Allows you to change the name of the custom drive mode.
- **Reset:** Reverts the setting values to the ones at the start of the current drive.
- **Delete:** Allows you to delete the custom drive mode.

Two presets are available by default. For Hill Climb and Desert Rally, you have the following option:

- **Reset:** Reverts the setting values to the factory defaults if you have made changes.

Change Settings

- **Acceleration:** Responsive makes the pedal more sensitive for quick acceleration. Relaxed makes the pedal more progressive for gradual acceleration and better control off-road.
- **Regen:** High regen allows you to slow down quickly when you take your foot off the accelerator pedal. Low regen gives you more of a coasting feel as you slow down gradually.
- **Brake assist:** More brake assist increases braking response to pedal input. Less assist increases modulation and offers finer control over braking power.
- **Steering assist:** Standard is tuned for smooth steering during daily and highway driving. Sport allows more confident steering in high-speed corners. Off-Road offers better feel for traction and grip on off-road surfaces.
- **Ride height:** Raising the ride height increases ground clearance and can improve ride comfort. Lowering the ride height provides a sportier ride with less roll and improves aerodynamics.
- **Torque balance:** Front bias sends more power to the front motors, promoting understeer. Rear bias sends more power to rear motors, sliding the rear out for a playful experience.
- **Wheel slip:** More slip frees up your wheels, allowing them to spin. Less slip promotes traction and precise control.
- **Stability:** With stability on, the vehicle helps hold your line and corner with control. Reduced stability allows the vehicle to get a little sideways, while stability off allows for an even more playful experience.

DANGER

- Keep stability on in most driving conditions. Electronic Stability Control optimizes vehicle traction and provide anti-skid support.
- Turning off stability disables Electronic Stability Control.

- **Damping:** More damping makes the vehicle feel connected to the ground for increased control and a stiffer ride. Less damping delivers a comfortable ride with relaxed handling.
- **Roll stiffness:** Stiffer helps limit body roll, giving flatter and firmer handling. Softer reduces system pressure, allowing more body roll and a comfortable ride on-road and off-road.

Drive Mode Settings

Stability

Choose a Stability setting based on the drive mode.

- **On:** Electronic Stability Control (ESC) and Traction Control System (TCS) provide maximum stability and traction in all driving conditions.
- **Reduced:** Both ESC and TCS activate to help stabilize the vehicle. Reduced allows a small amount of wheel spin.
- **Off:** Completely disables ESC and keeps TCS in its least restrictive setting. Off allows the highest level of wheel spin.

Drive Mode	Available Stability Settings		
All-Purpose	On (default)	Reduced	Off
Sport	On (default)	Reduced	Off
Conserve	On (default)	—	—
Snow	On (default)	Reduced	Off
All-Terrain	On (default)	Reduced	Off
Soft Sand	—	—	Soft Sand (default)
Rock Crawl	On (default)	Reduced	—
Rally	—	Reduced (default)	Off
Drift	—	Reduced	Off (default)

Ride Feel

Choose a Ride Feel setting based on the drive mode.

- **Soft:** Feel more comfortable while traveling over uneven terrain or rough roads.
- **Moderate:** Experience an optimal balance of ride and handling for daily drives.
- **Firm:** Feel more connected to the road.

Drive Mode	Available Ride Feel Settings		
All-Purpose	Soft	Moderate (default)	Firm
Sport	—	Moderate (default)	Firm
Conserve	Soft	Moderate (default)	Firm
Snow	Soft	Moderate (default)	Firm
All-Terrain	Soft (default)	—	Firm
Soft Sand	Soft (default)	—	Firm
Rock Crawl	Soft	—	Firm (default)
Rally	Soft (default)	—	Firm
Drift	Soft	—	Firm (default)

Brake Regen

Regenerative braking happens automatically when you lift your foot off the accelerator pedal. (See Regenerative Braking.)

- **Standard:** Moderate regenerative braking. Standard is the default setting for all modes except Snow and Soft Sand modes.
- **High:** Stronger regenerative braking. The vehicle slows down faster and captures more energy. High is not available on Model Year 2025 and 2026 Dual Standard vehicles.
- **Low:** Limited regenerative braking. Low is the default setting for Snow and Soft Sand modes.

Hold

Hold is on by default in all drive modes. You can turn off Hold in Rock Crawl mode (if equipped).

- **On:** Hold helps to stop the vehicle and keeps it stationary even if you don't have the brake pedal pressed. Press the brake pedal as needed. (See Vehicle Hold.)
- **Off:** Release the brake pedal to roll freely. Press the brake pedal to slow, stop, or keep the vehicle stationary.

Ride Height

Choose a ride height based on the drive mode.

Drive Mode	Available Ride Heights				
All-Purpose	—	High	Standard (default)	Low	—
Sport	—	—	Standard	Low (default)	Lowest
Conserve	—	—	Standard (default)	Low	Lowest
Snow	—	High	Standard (default)	Low	—
All-Terrain	Highest	High (default)	Standard	—	—
Soft Sand	Highest	High	Standard (default)	—	—
Rock Crawl	Highest	High (default)	—	—	—
Rally	—	High	Standard (default)	—	—
Drift	—	High	Standard (default)	—	—

Ride Height changes the distance from the lowest point of the vehicle to level ground.

Ride Height	Distance with 33-in Tire Diameter (275/60R20 or HL275/50R22)	Distance with 34-in Tire Diameter (275/65R20)
Highest	3.54 in (90 mm) higher	3.27 in (83 mm) higher
High	1.57 in (40 mm) higher	1.30 in (33 mm) higher
Standard	Mid-level	Mid-level
Low	1.38 in (35 mm) lower	1.65 in (42 mm) lower
Lowest	1.97 in (50 mm) lower	2.24 in (57 mm) lower

Automatic Ride Height Changes

- The Auto ride height setting is available in All-Purpose, Conserve, and Snow modes, except when towing a trailer.
- When the ride height is set to Auto, the vehicle automatically changes to Low ride height at higher speeds for increased efficiency and energy conservation. The vehicle returns to Standard ride height at lower speeds for increased ground clearance and comfort.
- In All-Purpose, Conserve, or Snow mode, choose **Auto** to turn on or off automatic ride height changes. You can also manually select another available ride height to turn off automatic ride height changes.
- In Premium or Dual vehicles, the Auto ride height setting turns on after 4 hours since your last drive.

NOTES

- The air suspension automatically adjusts to maintain ride height while the vehicle is moving or stopped.
- The air suspension may also adjust to ensure the vehicle appears level. This happens after you stop or put the vehicle in **P** (Park), even if you have left the vehicle.
- The air suspension compressor may continue to run for a few minutes after a drive.

Ride Height Details

- Be aware of conditions that require increased ground clearance when using Low or Lowest ride heights. This includes going over speed bumps, steep driveways, or off-road obstacles.
- In All-Purpose or Snow mode and High ride height, the vehicle lowers to Standard ride height at speeds above 45 mph (72 km/h), regardless of the Auto ride height setting.
- Off-Road modes with Highest ride height are limited to speeds under 20 mph (32 km/h).

Gauge View

To view real-time data from the vehicle, go to **Drive Modes** and swipe left on the center display. You can view driving details, including:

- **Vehicle:** Displays steering direction, plus torque (blue) and regen (green) levels for each motor.
- **Trip:** Tracks trip data such as distance, average speed, duration, and efficiency. Trip also shows total energy used.
- **Compass:** Indicates the direction of travel.
- **Elevation:** Indicates the current elevation and tracks the minimum and maximum elevation.
- **Pitch:** Indicates the angle of vehicle rotation along the transverse (front-to-back) axis.
- **Roll:** Indicates the angle of vehicle rotation along the longitudinal (side-to-side) axis.
- **Tires:** Displays the air pressure of each tire.
- **Motor:** Displays the temperature of each motor.
- **Battery:** Displays the temperature of the high-voltage battery.

Motor and Battery Temperature Details

Fluctuations in motor temperatures are normal during daily use. Higher motor temperatures most often occur during battery preconditioning (even if the vehicle is not in motion). It is normal for motors to heat up during regenerative braking, especially when the vehicle travels down a steep hill or mountain. It is also normal for motor and battery temperatures to rise while the vehicle is towing at maximum capacity.

If the battery is too cold, the vehicle uses the motors to heat the battery. The vehicle temporarily reduces power and restores power after you start driving and temperatures rise.

A notification and status indicator appear on the motor or battery gauges when temperatures are too hot or cold. The Limited Performance status indicator appears on the driver display when power is limited. When the motor or battery temperature gauge turns red, the vehicle temporarily reduces power to prevent overheating. However, the motors and battery cool down quickly, and the vehicle automatically restores power.

Motor temperatures may rise when the vehicle climbs tall obstacles off-road. If this happens, pause briefly to allow the motors to cool before approaching the next obstacle. This ensures that the vehicle has full power to continue climbing.

Navigation

Overview

Open **Navigation** on the center display to do the following:

- Browse and search the map
- Select and start navigation to one or more destinations
- View any needed charging stops for your trip and adjust charger preferences
- Set an address, place, or current location as your Home or Work

Navigation ends your trip when you park your vehicle near the destination.

When you select a destination, the estimated fastest route appears on the map along with up to two alternative routes.

Choose **Map Styles** to the right of the map to toggle on and off the satellite view.

Go to **Settings** **> Navigation > General** to set your navigation preferences such as guidance volume, map view, and traffic overlays.

> **NOTE**
> Saved locations and recent destinations are linked to driver profiles. Each individual driver can set their own Work and starred locations. These locations are then saved to their driver profile. The Home location is shared across profiles.

Choose **Feedback** to share feedback about your navigation experience or charging stations that you view or visit. **Feedback** is available on the map or on a location details screen. A panel appears for you to select categories for feedback. Choose a selected category again to deselect it. Be sure to **Send** your feedback before closing the panel.

> **NOTES**
> - Available categories on the feedback panel differ depending on where you access feedback.
> - Feedback is not available if you're offline or haven't accepted sharing location.

Though not as detailed as when you're online, map and navigation data is still available if you happen to be out of a network area or adventuring off-road.

Charging Stops

You can toggle to hide or show charging stations by choosing **Charger filter** to the right of the map on the center display.

Customize your view of charging stations on the map with filters for Speed, Networks, and chargers to hide (for example, out-of-order sites, charging stations incompatible with Rivian vehicles, or those that need charging adapters).

View information about a charging station by choosing a charger pin. Information includes type of station, location, distance, speed, and availability (if the station provides this status), as well as a charging score. These charging scores, based on plug-in data gathered from Rivian vehicles that visit the site, range from A to F, with A indicating the most reliable. Go to **Details** in the charging station dialog for more information about the station and its score.

If your vehicle doesn't have enough charge to reach a destination, charging stops are added to your trip to ensure sufficient range.

1. Choose **Trip Details** ^ to view Trip Details such as recommended charge times and charge speed. Choose a charging site to see more details.
2. Choose **Go** to begin navigation.

If you prefer not to charge at the charging stops, choose **Remove charging stops** on the Trip Details panel. This removes all charging stops from your route.

NOTES

- Battery range estimate for a route is based on your vehicle configuration, selected drive mode, and the route conditions (such as elevation, weather, and your driving speed).
- As you navigate to a charging stop along a selected route, the vehicle may heat or cool the battery pack to ensure that it reaches its most optimal charging temperature by the time you arrive at the stop. This helps facilitate the fastest possible charge time. When this occurs, you will see a message on the Navigation screen and on the driver display.
- Charging stations that need adapters are indicated on screens such as the navigation map, search results, and Trip Details. Not all models of NACS charging stations are compatible with Rivian vehicles.

Trip Preferences

Plan your trip on the center display and see available charging options along the route.

1. Search for an address or location.
2. Open the Trip Preferences screen with one of the following methods:
   a. On the **Trip Details** screen, choose **Trip preferences**.
   b. Go to **Settings** **> Navigation > Trip preferences**.
3. Choose your preferences such as charging networks, desired destination arrival range, and adapter use. The route preview on the map changes based on your settings.

NOTES

- If you set a high range for your preferred arrival, your trip time may significantly increase. You can opt to keep your preferences for future trips. Otherwise, the Trip Preferences screen resets to system default.
- If you use the slider to change the preferred arrival range and want to reset it back to default, choose **Reset**.

Add Stops

Add multiple stops along your route and during trip planning for a customized navigation experience. You can also use the Rivian mobile app and Google Maps to send a multi-stop trip directly to your vehicle.

From Map

Before a trip, search for an address or location on the center display's map and choose **Trip Details** ^ to access the Trip Details screen.

From Active Navigation Guidance

During an active guidance session, there are several ways to add a stop:

- On the panel for estimated time of arrival, choose **Add** ⊕ to add a new stop as your immediate next destination.
- On the panel for estimated time of arrival, choose **Trip Details** ^ to view the Trip Details screen.

From Charging Overlay

On the center display's map, tap on a charging stop and choose **Add Stop** to add it as a stop. You can toggle on the charging filter to the right of the map to view charging stops, shown as lightning bolts ⚡ on the map.

> **NOTE**
> You can add a stop from the charging overlay before your trip or during active navigation guidance.

Edit Stops

Edit the stops in your list from the Trip Details screen:

- Add more stops by choosing the "Add Stop" search field.
- Reorder a stop by pressing and holding and then dragging the stop up or down the list. You can reorder items in the list before adding a stop.
- Choose **Edit** ✎ at the top of the Trip Details screen for more ways to edit your trip.

Remove Stops

There are several ways to remove a stop from your list:

- On the Trip Details screen, remove a stop by swiping left.
- On the Trip Details screen, choose a stop to view the location details screen and choose **Remove Stop**.
- On the Trip Details screen, choose the **Trash Can** 🗑 that appears once you drag around a stop.
- On the Edit Trip screen, choose the **Trash Can** 🗑 next to a stop.

Send Location from Phone

Share an address or location from your phone to your vehicle. A shared location is available for 24 hours after you send it from the phone.

1. On your phone, search for a place, address, or charging location in the following ways:
   - Rivian mobile app (version 1.9 or later)
   - Apps with maps, such as Google Maps, Apple® Maps, and Yelp
   - Listed or linked addresses from text messages, emails, calendars, and notes
2. To send the location to the vehicle, do the following:
   - From the Rivian mobile app, select a location, and then choose **Send**.
   - From apps with maps, select a location, and then choose the **Share** icon for your phone.
   - From listed or linked addresses, long-press an address to show more options. Then choose **Share**.
3. The Navigation app on the vehicle's center display shows a preview of your route and the option to start navigation.

NOTES

- You can plan a trip from the Rivian mobile app and send the destination to your vehicle. The destination appears on the map with your preferences applied.
- If you share more than one location, the last shared location is sent to the Navigation app.
- If you're already in an active navigation session, you have the option to replace your current destination with the new location sent from your phone.

Towing a Trailer

Load Capacity

The R1T Dual with Standard or Large battery packs (Model Year 2025-2026) and R1T Premium (Model Year 2027) can tow up to 7,700 lbs (3,492 kg) using a weight distributing hitch, and up to 5,000 lbs (2,267 kg) using a standard hitch. The R1T Quad, R1T Tri, or R1T Dual with Max battery packs (Model Year 2025-2026) and R1T Quad, R1T Performance, and R1T Premium Long-Range (Model Year 2027) can tow up to 11,000 lbs (4,989 kg) using a weight distributing hitch, and up to 5,000 lbs (2,267 kg) using a standard hitch.

For all model years, the Tire and Loading Information label on the driver-side door frame describes the load capacity for the vehicle with or without a trailer. Since trailer loads are transferred to the vehicle, include the trailer and cargo weight to calculate the vehicle's cargo capacity. To determine the vehicle's correct load limit, see Steps for Determining the Correct Load Limit.

Rivian recommends a tongue weight that is approximately 10% of the total loaded trailer weight.

CAUTION

- Overloading the vehicle can lead to accelerated wear, adverse performance, or unsafe conditions.
- Tow charging another electric vehicle will damage both vehicles.
- Dinghy towing or flat towing isn't supported.

Trailer Hitch

The R1T features an integrated 2 in (5 cm) Class V receiver and a 7-pin trailer connector located behind the trailer hitch cover under the rear bumper.

To remove the trailer hitch cover:

1. Use a flathead screwdriver to loosen the screws in the trailer hitch cover a quarter-turn counterclockwise.

CAUTION

To avoid breakage, don't fully release the screws. The screws stay attached to the trailer hitch cover.

2. Grip the cover and pull it down vertically to remove it.

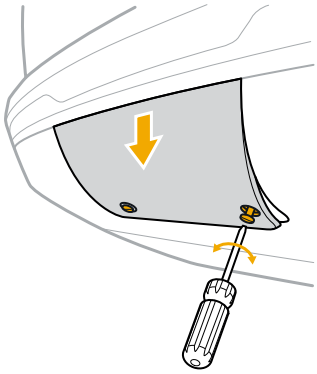

To reinstall the trailer hitch cover:

1. Align the trailer hitch cover tabs with the trailer hitch slot. Ensure that the cover is vertical.
2. Raise the trailer hitch cover vertically to insert the tabs into the vehicle. Push the cover into the trailer hitch slot until it is flush with the bumper.
3. Use a flathead screwdriver to turn both screws a quarter-turn clockwise. Stop tightening when the grooves are parallel to the bottom edge of the hitch cover.

CAUTION

Don't overtighten the screws.

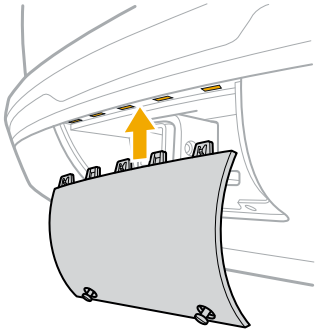

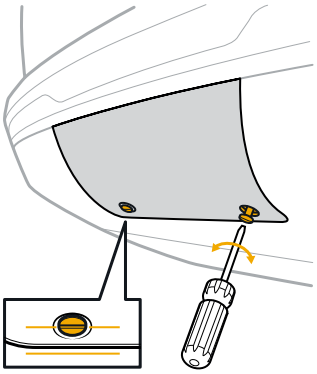

Trailer Settings

Choose a drive mode based on the road conditions where you will be towing a trailer. The following drive modes are optimized to help you tow a trailer safely. Available drive modes depend on your vehicle's motor type.

- All-Purpose
- Snow
- All-Terrain
- Soft Sand
- Rock Crawl

Choose a towing ride height when you prepare and load the trailer to ensure weight distribution is maintained. Changing the ride height while towing a trailer affects the loading conditions and can impact handling and stability, especially at higher speeds or on slippery surfaces.

The vehicle provides maximum available torque and trailer sway control is always on when towing a trailer.

The following features are disabled when towing a trailer:

- Rear ultrasonic sensors
- Auto ride height
- Kneel vehicle upon parking
- Adaptive Cruise Control (Manual Cruise Control is available)
- Autonomy features, such as Highway Assist, Lane Keeping Assist, Automatic Emergency Braking, Blind Spot Monitoring, and Rear Cross-Traffic Warning

Trailer Profiles

Trailer Profiles track the trailer's range impact, estimated trailer weight, efficiency and mileage for up to three trailers. The vehicle switches to the last used profile when a trailer is plugged in. On the center display, go to **Drive Modes** and swipe left on the center display. Then choose **Towing** to view Trailer Profile data or choose a different profile. You can also rename the profile to describe your trailer.

Range at 100% and Trailer Weight are estimated values calculated while towing your trailer. When a Trailer Profile is first set up, the values show "- -" while the vehicle is learning about your trailer configuration and mass.

Certain Autonomy features, such as Adaptive Cruise Control, Highway Assist, Universal Hands-Free, and Lane Change on Command, can be used when an electrical accessory is connected to the trailer hitch, such as a bike or luggage rack. To use these features, choose **Accessory** in Trailer Profiles.

CAUTION

Autonomy features may not work as designed if the connected accessory interferes with detections, or is too heavy or large. It is your responsibility to select the correct profile upon connecting an accessory.

NOTES

- The Accessory option is only available when you have an accessory connected to the trailer hitch.
- Trailer learning occurs automatically as you drive and requires smooth acceleration on relatively flat and straight roads.
- Trailer learning takes longer on curvy roads, or when driving at slower speeds.
- A notification appears when trailer learning is complete.

At the start of every drive, the vehicle detects your trailer mass and aerodynamics characteristics and notifies you if there's a significant difference that affects range.

- **Range at 100%:** This value represents the estimated range of your vehicle while towing your selected trailer if the vehicle is charged to 100%. After learning is complete, this value directly correlates to the range shown on the driver display.
- **Trailer Weight:** Trailer Weight is an estimated value based on the detected weight of your vehicle and trailer combined minus the fixed vehicle weight, which is also called Lightly Loaded Vehicle Weight.

  Trailer Weight = (Detected Vehicle + Trailer Weight) - (Lightly Loaded Vehicle Weight)
  Lightly Loaded Vehicle Weight = Vehicle Curb Weight (your vehicle, completely empty) + 400 lbs (180 kg)

  CAUTION

  Trailer weight is an approximation based on assumed vehicle values. Don't use the estimated weight for trailer setup and loading. Always use external measurement devices to verify the weight of your trailer.

- **Lifetime Efficiency and Distance Towed:** Trip data specific for your trailer.
- **Reset:** Choose **More** ··· in the trailer profile. Reset the **Range at 100%** and **Trailer Weight** if your trailer load or aerodynamics characteristics have changed or you want to reset the estimated values. Reset the **Lifetime Efficiency** and **Distance Towed** to clear the trailer's trip data. Reset both if you're towing a new trailer.

Rear Accessory Mode

When you install an accessory on the trailer hitch, you can hide rear visual alerts and mute audio warnings while the vehicle is in **R** (Reverse). To turn on Rear Accessory Mode, choose **Settings** ⚙ **> Autonomy > Park Assist Warning > Rear Accessory Mode**.

Trailer Brakes

The vehicle supports electric trailer brakes. Support for additional braking systems will be available in a future update.

When the brake pedal is depressed, the trailer brakes are actuated proportional to the gain setting and brake pressure applied.

Trailer Brake Gain

When you connect a trailer that has electric trailer brakes, go to **Drive Modes** > **Trailers** > **Trailer Brake Gain**. Set the Trailer Brake Gain appropriate for your trailer, driving conditions, and terrain.

Before you tow, test the trailer brakes and adjust the gain if necessary. You can also use the Manual Trailer Brake to check the trailer brake function.

Change the Trailer Brake Gain when the surface conditions change.

> **NOTE**
> Trailer Brake Gain is only available on trailers with trailer brakes. If you connect a trailer equipped with lights only, the Trailer Brake Gain control is off.

Manual Trailer Brakes

When towing a trailer with electric trailer brakes, you can apply the trailer brakes independent of the vehicle brakes. Press and hold the right thumbwheel to apply the trailer brakes. The trailer brake pressure gradually increases to the maximum set gain value.

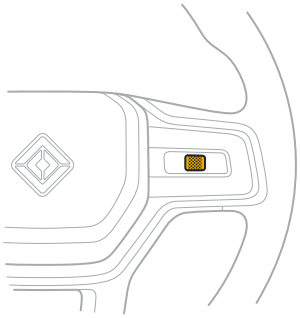

> **NOTE**
> The Manual Trailer Brake only applies the brakes to the trailer, not the vehicle.

Vehicle Hold

Vehicle Hold is available while towing, but is limited on extreme grades. If Vehicle Hold can't keep the vehicle and trailer from rolling, the vehicle automatically shifts to **P** (Park). Always be ready to take control in extreme situations.

Manual Cruise Control

Manual Cruise Control is only available when you're towing a trailer. Manual Cruise Control maintains a set speed and allows you to remove your foot from the accelerator pedal.

WARNING

- When Manual Cruise Control is engaged, always monitor traffic and driving conditions, and be prepared to brake if needed. This feature, along with the speed engagement settings, is designed to support you, the driver, and doesn't replace your attention, judgment, and need to control the vehicle.
- Manual Cruise Control doesn't adjust the set speed according to the posted speed limits. It's your responsibility to adjust the set speed according to the posted speed limit.

To turn on Manual Cruise Control, pull the drive stalk toward you and then release. The vehicle chimes and then maintains the set speed. The set speed appears in a circle at the top of the driver display.

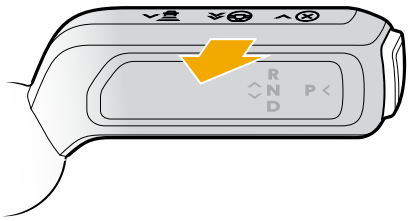

To turn off Manual Cruise Control, push the drive stalk away from you and then release, or press the brake pedal.

Manual Cruise Control disengages when you apply the Manual Trailer Brake or if a trailer sway event occurs. Press the brake pedal or the Manual Trailer Brake to slow down the vehicle.

CAUTION

When Manual Cruise Control is engaged, always monitor traffic and driving conditions. Be prepared to press the brake or accelerator pedal if needed.

- Manual Cruise Control won't maintain an appropriate distance from a vehicle that is ahead of you in the current lane.
- If you drive uphill or downhill while using Manual Cruise Control, the vehicle may not maintain the set speed.

Off-Road Driving

Trip Preparation

Before You Start

If you are new to off-road driving, consider the following suggestions.

- Take an off-road driver training class.
- Go to off-highway vehicle (OHV) parks to practice.
- Research trails to determine the level of difficulty.
- Ride along with experienced drivers to gain skills.

Safety Information

- Check the weather forecast before your trip.
- Obey road closures.
- Avoid traveling alone in remote areas.
- Pack and securely store safety and recovery equipment as recommended by local authorities, 4-wheel drive (4WD) associations, or your training. Such equipment may include a whistle, a fire extinguisher, a safety vest, gloves, and safety glasses.

  You may choose to bring extra food and water, an emergency shelter, a backcountry toilet, and sanitary supplies, appropriate to your trip.
- Don't drive through rapidly moving water. Avoid swift water or currents. See Drive Across Water.

First Aid

- Carry a first aid kit. You can purchase a commercial first aid kit or assemble your own. Consider stocking your kit with extra dressings or a bleeding control kit.
- Maintain your kit and regularly check the expiration date on the kit contents.
- Consider taking a first aid class to be prepared for situations in which help may be delayed.

Communications Gear

- Carry electronic communications equipment.
- Consider using multiple types to allow for compatibility with other trail users.
- Remember to include charging cables and spare batteries.
- Consider bringing a satellite phone.

Tread Lightly! Principles

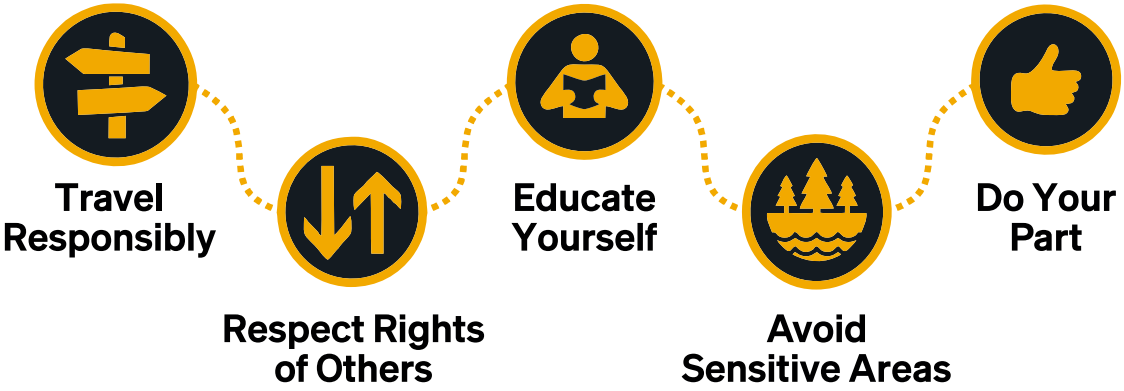

Travel Responsibly

- Travel only in areas open to four-wheel drive vehicles.
- Stay on the trail and avoid actions that may damage the trail.

Respect Rights of Others

- Yield to hikers, bicyclists, and animals. Yield to those passing you or going uphill.
- Respect private property.
- Leave gates as you found them.

Educate Yourself

- Plan for your trip.
- Review maps and regulations.
- Take a skills class.

Avoid Sensitive Areas

- Drive over, not around, obstacles to avoid widening the trail.
- Don't disturb historical artifacts, geographic features, and the natural environment.
- Cross streams at designated fording points, where the road crosses the water.

Do Your Part

- Leave the area better than you found it.
- Haul out trash.
- Minimize the use of fire. Observe fire restrictions.

Learn more about Tread Lightly!

Tips and Techniques

DANGER

- The vehicle should be equipped with all-terrain wheels and tires, front bumper tow hooks, a reinforced underbody shield, and a rear-mounted tow hitch, when you drive off road on technical terrain. Driving without this equipment increases the risk of vehicle damage that can lead to further vehicle damage, tire failure, loss of control, fire, serious injury, or death.
- Perform a post-trip inspection before you return to paved roads and highways. Off-road driving may cause vehicle damage that can lead to further vehicle damage, tire failure, loss of control, serious injury, or death.

Use these tips to drive off road safely and efficiently:

- Drive as slowly as possible, and as fast as necessary.
- Be aware of the vehicle's weight distribution on inclines, and how the angle of slope affects the center of gravity.
- Use smooth progressive inputs for accelerator, brake pedal, and steering. Abrupt inputs can cause loss of traction, stability, or momentum.
- Choose an approach or path to avoid damage to the vehicle and trail. Use a spotter and hand signals when needed.
- Use inertia and momentum carefully. Be aware of the weight of the vehicle and maintain control appropriate to the terrain and surface conditions.
- Keep your hands on the steering wheel. Use safe hand positions to maintain control, such as keeping thumbs and fingers on the outside of the wheel and using the push-and-slide technique to turn rather than overhanding.
- In mud, drive slowly at a steady pace. Maintain momentum and avoid stopping. If possible, check for hidden obstacles and the mud depth. Limit spinning tires as much as possible; however, sometimes some spin can aid momentum.
- In deep snow, maintain momentum and avoid stopping while climbing up gradients as securing the vehicle can be tricky. Some tire spin can help maintain momentum, but try to avoid excessive spin. Be careful of slopes and obstacles hidden by the snow.

NOTE

Drive mode availability depends on your vehicle's motor type.

All-Terrain

- Choose **All-Terrain** mode for general off-road driving or when you're unsure about which drive mode to choose. It is ideal in most conditions, but not optimized to any surface or situation. For example, choose this mode when you don't know what type of terrain you will encounter.
- Reduce tire pressures when wheel slip is likely to occur. See Air Down Tires. Ensure tires are inflated to normal pressures before returning to roads and highways.

Soft Sand

- Choose **Soft Sand** mode in soft, dry sand and sand dunes. Soft Sand optimizes systems such as accelerator pedal response, torque distribution, and traction control.
- Reduce tire pressures. See Air Down Tires. Ensure tires are inflated to normal pressures before returning to roads and highways.
- Keep turns, acceleration, and braking smooth and consistent. Avoid sudden moves or sharp turns.
- Maintain momentum and avoid stopping. Stay afloat and be aware of shifting sand.
- If you need to stop, attempt to stop the vehicle on a downhill, preferably facing forward.
- Pull away from a stop using gradual accelerator pedal inputs to avoid spinning the wheels and sinking them in the sand.

Rock Crawl

- Choose **Rock Crawl** mode for negotiating high-articulation terrain or steep hills. Rock Crawl optimizes the vehicle for very low-speed driving when precise control and wheel placement are required.
- If traction is a concern, reduce tire pressures. See Air Down Tires. Ensure tires are inflated to normal pressures before returning to roads and highways.
- Use slow, progressive accelerator pedal inputs when negotiating obstacles. Choose a safe line.
- Always increase torque slowly when negotiating steep gradients or obstacles.
- Vehicle Hold, in addition to using the brake pedal, can help prevent the vehicle from rolling backwards when you climb steep gradients or obstacles. It may help to turn off Vehicle Hold when driving down hills.
- Motor temperatures may rise when the vehicle climbs tall obstacles off-road. If this happens, pause briefly to allow the motors to cool before approaching the next obstacle. This ensures that the vehicle has full power to continue climbing.
- If you change the Ride Height setting at any time, ensure that you reset Ride Height to the default as soon as possible. This maintains optimum wheel control and stability for the terrain.

Rally

- Choose **Rally** mode for off-road driving when you want the vehicle to feel less restricted. Rally reduces system control over the vehicle. Take care to drive within your capabilities.
- Don't use Rally in or near sensitive areas where Tread Lightly! principles are required.

Drift

- Choose **Drift** mode to slide the vehicle around in off-road environments such as snow, dirt, or sand. Drift shifts power rearward, turns off stability control, and reduces traction control. Take care to drive within your capabilities.
- Don't use Drift in or near sensitive areas where Tread Lightly! principles are required.

Air Down Tires

Reduce the air pressure in your tires before you go off road to improve traction, help prevent tire damage, and minimize trail surface wear.

DANGER

- Off-road driving may cause damage that can lead to tire failure. If you notice damage to a wheel or tire during a post-trip inspection, change the tire prior to driving on the road.
- Increase the air pressure in your tires as soon as possible and always before you return to high-speed driving on dirt or paved roads.
- An underinflated or damaged tire may fail; this could cause a sudden loss of vehicle control that may result in personal injury or death.

CAUTION

- The 20-inch wheels with all-terrain tires are recommended to maximize off-road capability. Use caution when driving off road with other wheel packages to prevent wheel and tire damage.
- To support the vehicle's weight, inflate tires to the recommended minimum tire pressure (or higher) to prevent damage to the vehicle.

The following minimum tire pressure levels are recommended in Soft Sand mode and Rock Crawl mode. These minimum tire pressure levels are also recommended in other off-road drive modes on rough terrain or in deep snow.

Tire Size	Off-Road Tire Pressure (Recommended Minimum)
275/65R20 (20 in All-Terrain)	31 psi (214 kPa)
275/60R20 (20 in All-Terrain)	31 psi (214 kPa)
HL275/50R22 (22 in Sport or Range)	32 psi (221 kPa)

IMPORTANT

It is common practice to reduce the tire pressure when driving off-road in sand, mud, or extremely rocky conditions using the 20-inch wheels with all-terrain tires. Driving with tire pressure below the recommended minimum is at your own risk. Don't reduce the tire pressure below 25 psi (172 kPa) and minimize the time driving with low pressure to reduce the risk of damage to the wheels and tires.

NOTES

- Low tire pressure notifications don't display when the vehicle is in an off-road drive mode.
- Remember to increase tire pressure before you return to the road.
- If equipped, use the air compressor to inflate the tires.
- Use the tire sealant in the tire mobility kit and optional spare tire if you need to seal or change a flat tire.

Drive Across Water

The vehicle can cross water up to 39 in (1 m) deep at up to 5 mph (8 km/h). Follow these guidelines to help prevent damage to the vehicle.

CAUTION

Don't drive in crosscurrents.

Assess the Terrain

- Check the water depth and ground surface before you drive into an area covered in water.
- Be aware of underwater obstacles or debris.

Prepare the Vehicle

- Go to **Drive Modes** **> All-Terrain** (under **Off-Road** on Performance, Tri, and Quad vehicles), and then choose **Highest** under **Ride Height**.
- Ensure all doors and storage areas are closed securely.
- Leave the windows open to ensure an easy exit in case of an emergency.

Cross the Water

- Enter the water slowly and maintain a steady speed without stopping.
- Don't submerge the hood, and avoid driving at a speed that causes water to splash over the hood.

CAUTION

If you need to back up out of the water, keep your speed at 5 mph (8 km/h) or lower.

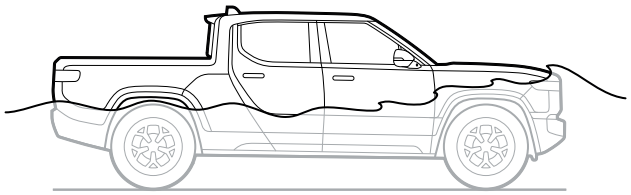

NOTE

The cooling fan and refrigerant compressor may stop temporarily while the vehicle is partially submerged.

- Before driving away from the water, pause at the point where the vehicle exited the water to allow most of the water to drain from the vehicle. This minimizes environmental and vehicle damage.
- Drive a short distance away from the water after crossing and test your brakes to ensure they work properly.
- Press and hold the horn for two seconds to clear any water. Repeat four more times. If the horn doesn't work normally on the fifth press, allow time for the horn to dry out.
- Perform a post-trip inspection before you return to paved roads and highways.

CAUTION

If the vehicle crosses a body of muddy water, we recommend that you clean the vehicle as soon as possible, using either a commercial car wash or hand wash. Mud buildup can affect thermal performance, and hardened mud can cause corrosion or other vehicle damage.

Negotiate Obstacles

DANGER

To maintain stability and reduce the risk of a rollover, vehicle damage, or serious injury when driving on hills:

- Proceed as slowly as possible, yet as fast as necessary.
- Avoid driving or stopping at an angle on hills.
- Avoid side slips whenever possible.

Don't walk below a vehicle on a hill to avoid the risk of serious injury.

CAUTION

To prevent vehicle damage and avoid getting stuck when negotiating obstacles:

- Proceed as slowly as possible, yet as fast as necessary.
- Avoid driving over large obstacles centered under the vehicle.
- Reduce your speed slightly when approaching the crest of a hill or the bottom of a dip while maintaining sufficient momentum to proceed.

Before You Begin

- When negotiating obstacles for the first few times, start slowly to gain confidence.
- Practice on smaller obstacles until you feel comfortable with the proper techniques and necessary speeds.
- Don't be afraid to approach slowly. If you come to a stop and don't ground or excessively jolt the vehicle, you should be able to reverse and try again using slightly more speed or a slightly different approach angle.
- Ensure during these early attempts that you either negotiate obstacles where you are unlikely to get stuck or that you have the equipment to recover the vehicle.
- For optimal comfort and vehicle capability, use Standard or High ride height. Use Highest only in areas where extra clearance is needed.

Ruts and Tracks

- Use a smooth driving technique to reduce jolts in rough tracks.
- Follow existing tire tracks on wet, muddy, or hard ground since they offer the most traction and best chance of successful navigation.
- Avoid existing tire tracks on soft, dry terrain where wheel sinkage occurs, such as sand, since thin, wind-dried crust breaks easily to expose the soft sand underneath.
- If possible, straddle deep ruts where the bottom of the vehicle is likely to contact the ground. This reduces the chance of becoming grounded, in which multiple wheels no longer have traction.
- As you approach the crest of a hill or the bottom of a dip, reduce your speed slightly to prevent damage to the vehicle while maintaining sufficient momentum to avoid getting stuck. Proceed as slowly as possible, yet as fast as necessary.
- Steer carefully in slippery ruts since steering can have a reduced effect. It can be helpful to periodically reduce your grip on the steering wheel to ensure the wheels are centered. You can also check the steering direction in **Drive Modes > Gauge View** on the center display.

DANGER

If the steering direction is not in your intended direction of travel, the vehicle could suddenly veer out of ruts when the depth decreases, flat ground is reached, or traction improves. Steer carefully to reduce the risk of a rollover, vehicle damage, or serious injury.

Ridges, Ditches, Steps, and Rocks

- To prevent damage to the vehicle, drive diagonally over small obstacles (the underbody or bumpers won't touch the ground) and medium obstacles (the vehicle may touch the ground).

  For small obstacles, you can take them at right angles; however, it may cause a jolt.
- Drive with extreme caution over large obstacles (the wheels leave the ground if driven diagonally). Maintain enough momentum to enable the vehicle to continue over the obstacle when you experience loss of traction.

IMPORTANT

It is critical to proceed as slowly as possible, yet as fast as necessary.

- Choose a route that allows you to place a tire over a large obstacle. Choose an approach that allows you to maintain clearance and keep at least three wheels on the ground to push the vehicle forward.

Climbs and Descents

- Approach and climb hills straight up. Use only enough speed to climb the hill and be able to control the vehicle over the crest. Press the accelerator pedal gently to reduce the likelihood of wheel spin.
- On more extreme climbs and descents, and where possible, get out and look at the slope to identify the traction conditions and obstacles ahead. This is particularly important before a descent as you will be unable to see over the hood as you drive over the crest.
- Don't be afraid to tackle the hill slowly and repeat the approach with increased speed until you complete the climb. This allows you to better understand what speeds are suitable when you climb hills in the future.
- A climb is likely to fail when the speed is insufficient or wheel spin slows the vehicle. As soon as you feel like you won't make it, press the brake pedal to stop the vehicle. Put the vehicle in **R** (Reverse) and keep both hands on the steering wheel. Use the side mirrors and the rearview mirror for rear vision. Avoid turning your head to look behind as this can cause you to turn the steering wheel.
  - If Hold is off, slowly ease off the brake pedal until the vehicle starts to move backwards. Maintain enough brake pressure to prevent the vehicle from gaining too much speed. On shallower gradients, regen may help to control the descent speed. If the vehicle begins to slide, ease off the brake pedal and gently press the accelerator pedal to match the wheel speed with the vehicle speed. Be ready to press the brake pedal again as the gradient decreases.
  - If Hold is on, slowly ease off the brake pedal, and then gently press the accelerator pedal until the vehicle starts to move backwards. If the wheels start to slip, increase the accelerator pedal pressure to match the wheel speed with the vehicle speed. If the vehicle starts to speed up too much when there is traction, press the brake pedal to reduce speed.
- Descend hills straight down and keep both hands on the steering wheel. For shallower descents, regen may help to control the vehicle speed. If the speed increases too much, then gradually press the brake pedal to reduce or maintain speed. As with a failed climb, if the wheels begin to slip and the vehicle starts sliding, be ready to press the accelerator pedal gradually to help the wheels catch up with the vehicle speed.

Kick Turn

Kick Turn increases off-road maneuverability for Quad vehicles. Kick Turn uses all four motors to reduce the radius of a turn. This allows the vehicle to rotate in place or while in motion at speeds under 15 mph (24 km/h). Choose **Kick Turn** when you drive off-road in tight spots, including hairpin turns, switchbacks, or when you turn around on a blocked trail.

Kick Turn should be used on flat, smooth, hard-packed dirt roads or trails. Don't use Kick Turn in or near sensitive areas where Tread Lightly! principles are required.

DANGER

- Kick Turn should only be used by a skilled driver in an off-road environment, specifically unpaved surfaces. It is your responsibility to drive safely.
- Become familiar with Kick Turn by starting with small maneuvers at extremely low speeds in open spaces.
- Only use Kick Turn on flat, smooth, hard-packed dirt roads or trails.
- **Never use Kick Turn** in the following conditions:
  - On deep surfaces such as sand or mud.
  - On an incline.
  - Near a drop-off, such as a cliff, hillside, or drainage channel.
  - On public roadways, or where pedestrians, animals, or obstacles are present.
  - Where obstructions in the off-road environment, such as rocks, ruts, or tree roots, may exist.
  - While towing a trailer.
- Before you use Kick Turn, ensure that no people, animals or obstacles are under or in the path of the vehicle.
- Kick Turn can launch rocks, dirt, and loose objects.
- When you use Kick Turn, consider its effects on your vehicle, occupants, and property:
  - Centrifugal forces may act on the vehicle, occupants, and property. To avoid injury and damage, occupants should sit properly in their seats and securely restrain any loose items. (See Proper Sitting Position.)
  - The vehicle's wheels and tires may dig into the ground, increasing the risk of rollover. To maintain stability and reduce the risk of rollover, proceed cautiously while taking note of roadway surfaces.
  - Kick Turn changes the vehicle rotation characteristics of the vehicle and reduces system control over it. During a Kick Turn, the left and right sides of the vehicle rotate in opposite directions, enabling it to spin or rotate by intentionally breaking traction. Drive with caution.
  - Use Kick Turn sparingly. Continuous use of Kick Turn will prematurely wear the tires and other vehicle components. For safety and maximum tire performance, replace your tires when they become worn. Driving with worn tires substantially increases the risk of an accident in reduced traction conditions, such as rain or snow.
- Failure to follow these warnings can result in property damage, serious injury, or death.

CAUTION

- When you use Kick Turn, the vehicle's wheels and tires may dig into the ground and the underbody may make ground contact. Wheels or tires can be damaged by concealed obstacles like rocks.
- Never use Kick Turn on paved roads. Doing so will damage the wheels and tires and may reduce the vehicle's durability. Reduced durability may cause components to wear more quickly than expected and cause vehicle damage over time.
- Performing Kick Turn with low tire pressure (below placard specification) may result in damage to both the vehicle and any accompanying property.
- Damage caused by use of Kick Turn is not covered by the New Vehicle Limited Warranty.

IMPORTANT

Follow the prompts and pay attention to any messages on the driver display. If left unresolved, improper conditions may inhibit Kick Turn functionality.

NOTE

Tire damage caused by frequent use of Kick Turn is not covered by the New Vehicle Limited Warranty.

Use Kick Turn

1. Go to **Drive Modes** and choose **All-Terrain** or **Rock Crawl**.
2. Choose **Kick Turn** on the **Off-Road** drive modes panel.
3. Swipe to enable **Kick Turn** while driving. Kick Turn appears on the driver display until you disable it or shift to another drive mode.
4. Follow the prompts on the driver display to perform a Kick Turn.
   a. To turn left, press and hold both left buttons at the same time.

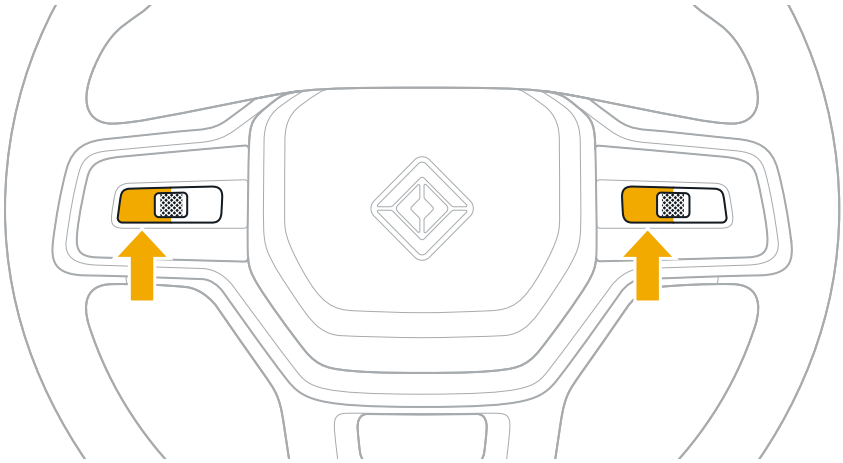

   To turn right, press and hold both right buttons at the same time.

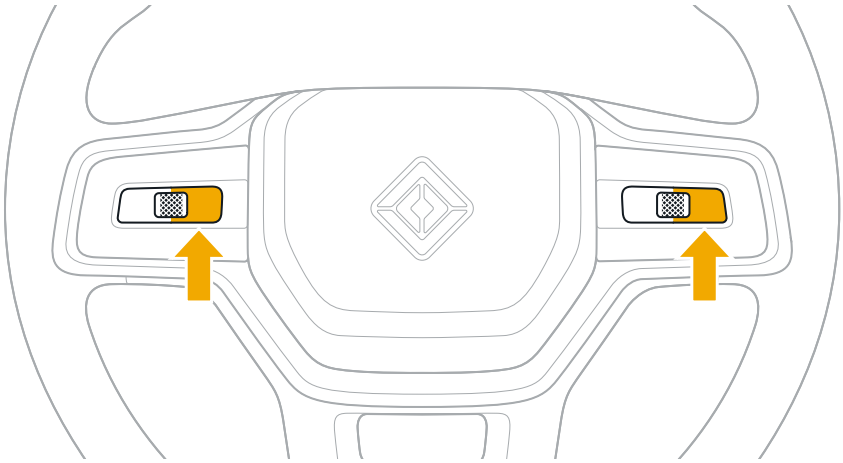

   b. After the initial button press, press the accelerator pedal within 20 seconds to start the Kick Turn.

> **IMPORTANT**
> If you don't press the accelerator pedal within 20 seconds, the Kick Turn times out.

5. The Kick Turn activates for a maximum of 20 seconds at a time, from the initial button press to the completion of the turn. To manually stop the Kick Turn, release the steering wheel button(s) or accelerator pedal.

To turn off the Kick Turn feature, you have two options:

- Choose **Kick Turn** on the Off-Road drive modes panel.
- Change to a different drive mode (other than All-Terrain or Rock Crawl).

Driving Conditions

IMPORTANT

Under certain conditions, Kick Turn may be inhibited or may perform sub-optimally. Such conditions include, but are not limited to, the following:

- The vehicle is in **P** (Park), **N** (Neutral), or **R** (Reverse) instead of **D** (Drive).
- The vehicle speed exceeds 15 mph (24 km/h).
- The slope of the terrain exceeds 10°.
- The vehicle is traveling over excessively uneven terrain.
- The steering wheel is turned excessively.
- The tires of the vehicle have too much grip on the terrain.
- The vehicle is experiencing abrupt movements or changes in direction or speed.
- The steering wheel buttons are pressed and held incorrectly or for too long.
- The vehicle is at or exceeds the load limit. See Steps for Determining the Correct Load Limit for more information.

Recover the Vehicle

DANGER

- The vehicle should be equipped with all-terrain wheels and tires, a reinforced underbody shield, front bumper tow hooks, and a rear-mounted tow hitch, when you drive off road on technical terrain. Driving without this equipment increases the risk of vehicle damage that can lead to further vehicle damage, tire failure, loss of control, fire, serious injury, or death.
- Tow hooks are for vehicle recovery use only. Don't use these tow hooks for recreational towing or trailer transport, and don't use them as stationary tie-down points if you transport the vehicle.
- Recovering a vehicle from a stuck situation can be difficult and may damage the vehicle. Only attempt to recover the vehicle if you are trained to do so. Choose the safest method of recovery possible.
- Don't attempt to recover the vehicle unless its wheels and tires are free to rotate. Ensure the vehicle isn't in **P** (Park).
- If the vehicle is deeply mired or it is submerged to or past the axle, don't attempt to recover the vehicle by yourself. Seek assistance from a professional vehicle recovery service.
- Prior to recovering the vehicle, ensure your recovery plan is within the capability of your equipment. Use a suitable calculator to predict the recovery load prior to starting a recovery.
- Wear gloves, eye protection, and any other appropriate protective equipment when recovering the vehicle.
- Stay clear of the vehicles when equipment is under load. Use a recovery damper as a safety precaution to arrest the rope or cable if there is a snap.
- If you need to get out of the vehicle, exit on the uphill side if the vehicle is stopped sideways on a hill. Stay clear of the rollover path.

Recovery Connections

If your vehicle is equipped with tow hooks on the front bumper, use a recovery bow shackle to connect the strap loops to the tow hooks to recover the vehicle from the front. You can also connect a recovery hook to the tow hooks.

NOTE

Connecting to the front tow hooks may scratch the bumper and tow hooks. You can use protective tape or paint protection film to minimize damage.

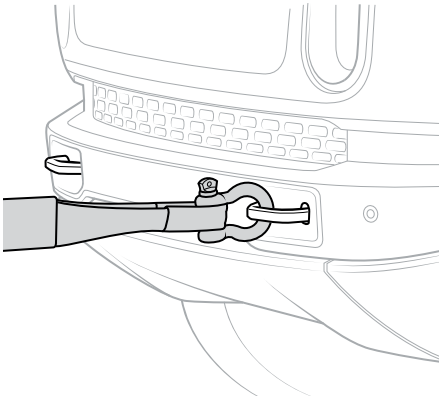

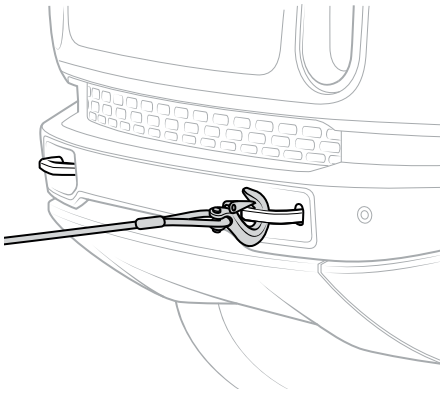

To recover the vehicle from the rear, use the tow hitch receiver insert included in the vehicle recovery kit (available separately). Refer to the instructions included with the recovery kit. You can also connect to the safety chain loop on the tow hitch.

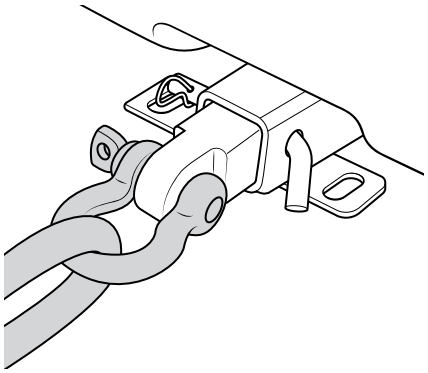

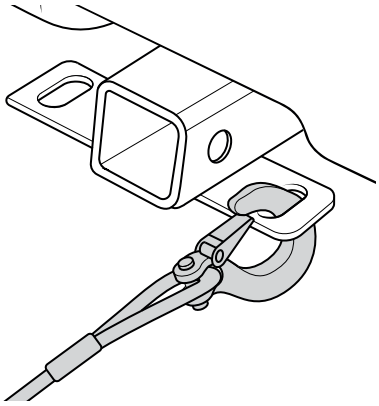

Recovery Guidelines and Angles

Attach the equipment to ensure that the force is applied within the recommended ranges as follows.

> **NOTE**
> The illustrations are not to scale.

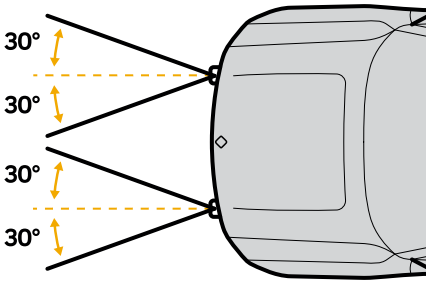

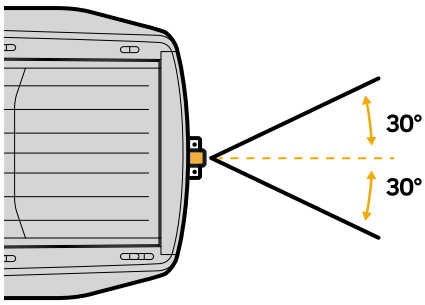

- For a single-line pull, stay as straight as possible. The angle on a single-line pull can't exceed 30° in any direction to prevent damage to the vehicle.
- If you use the safety chain loop on the tow hitch, the angle can't exceed 30° in any direction to prevent damage to the vehicle. Ensure that you connect to the side that allows you to pull away from the tow hitch.

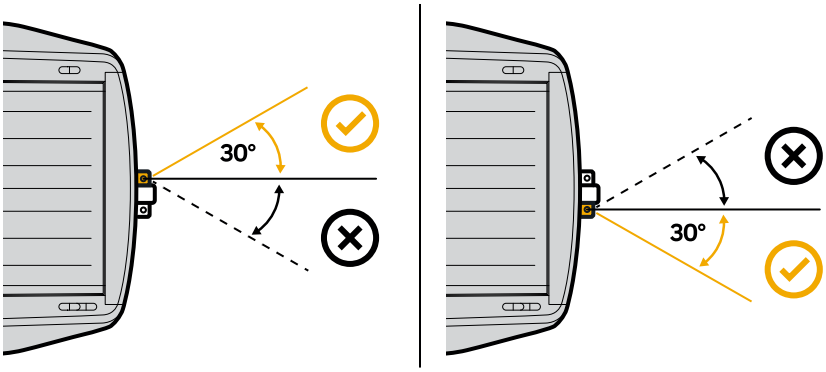

For off-road recovery, we recommend that you use both of the front tow hooks to distribute the load. You can use a bridle or a double-line pull with a bridle.

- If you use a bridle, connect to the front tow hooks with less than a 45° angle to prevent damage to the vehicle.

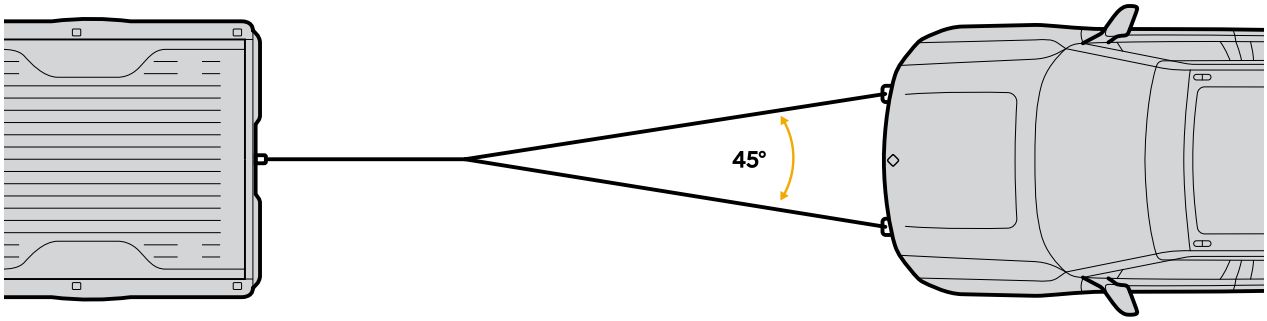

- If you use a double-line pull, connect to the vehicle using a snatch block, and then back to the other vehicle. The angle on a double-line pull can't exceed 30° to prevent damage to the vehicle.

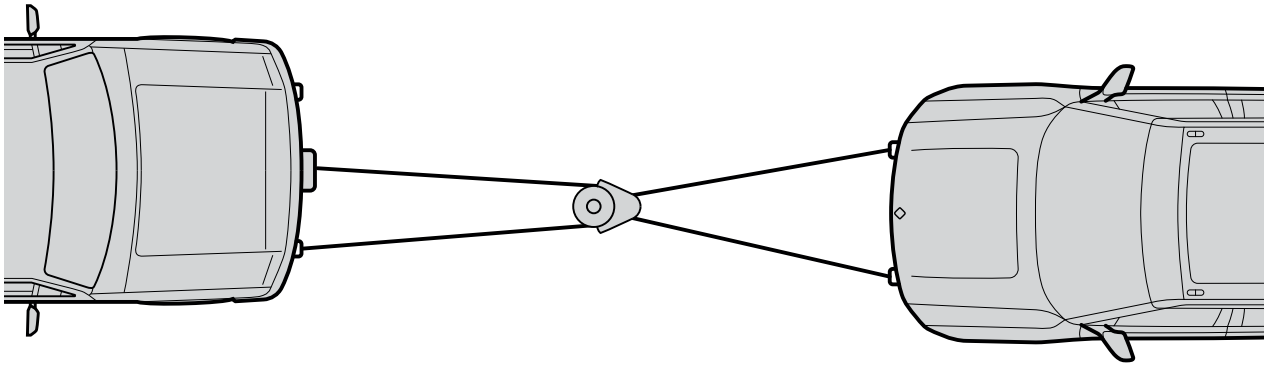

Post-Trip Inspection

Before returning to paved roads and highways, inspect the vehicle as follows.

Exterior Body

- Inspect the exterior and remove anything picked up from the trail, such as brush, foliage, or debris.
- Check the wheel arches. Remove any obstructions that block wheel movement.
- Inspect the vehicle fascias for significant damage. Ensure that all fascias are securely attached to the vehicle.

Steering and Suspension

DANGER

Off-road driving may cause vehicle damage that can lead to further vehicle damage, tire failure, loss of control, serious injury, or death. If you notice damage to the steering and suspension, contact Rivian before driving on the road.

- Turn the steering wheel to exercise the steering system and inspect the steering components on both front wheels.
- Verify that the caster bolts on the front wheel lower control arms are in place and that there are no signs of damage. Compare the bolts on the right and left sides to ensure they match.

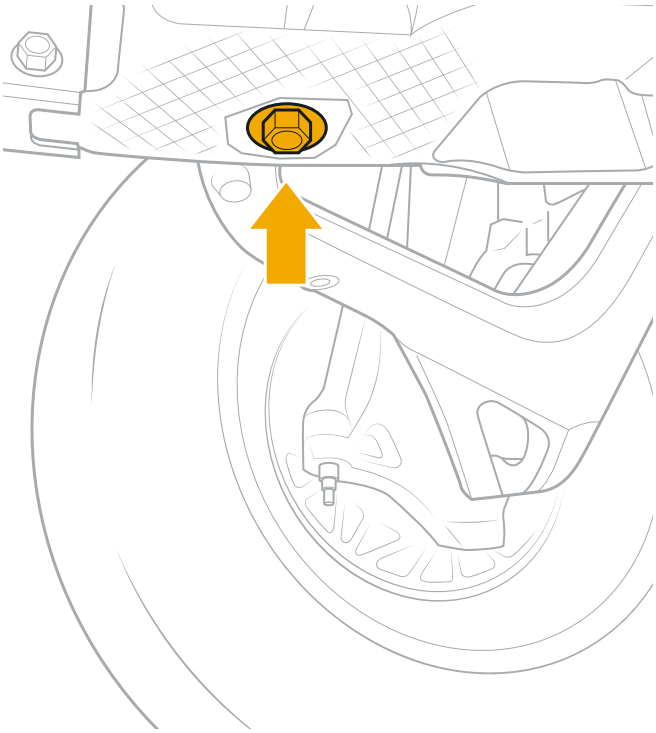

- Inspect the front steering tie rods. Ensure that they are straight and that there are no signs of damage. Remove any brush or debris that may restrict movement or cause damage to the drive shaft.

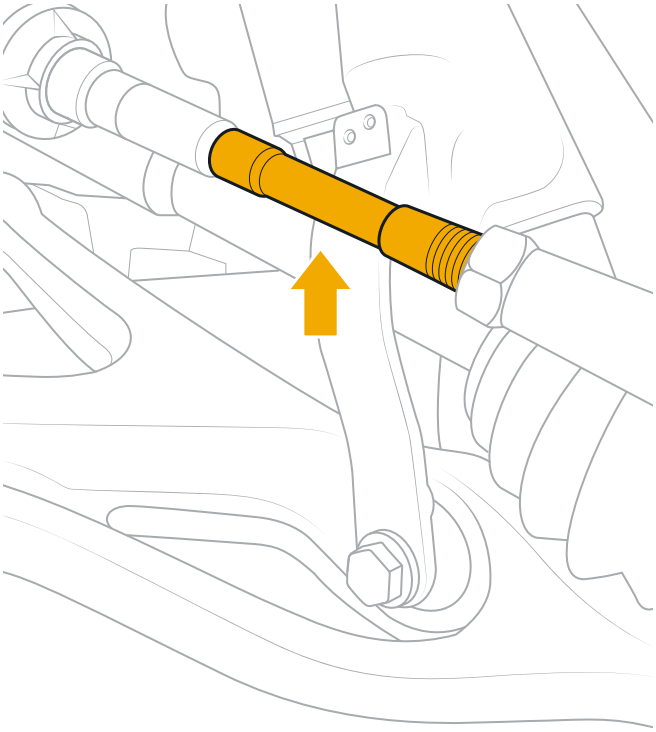

- Verify that the hydraulic lines and bolts on the rear wheels are in place and that there are no signs of damage.

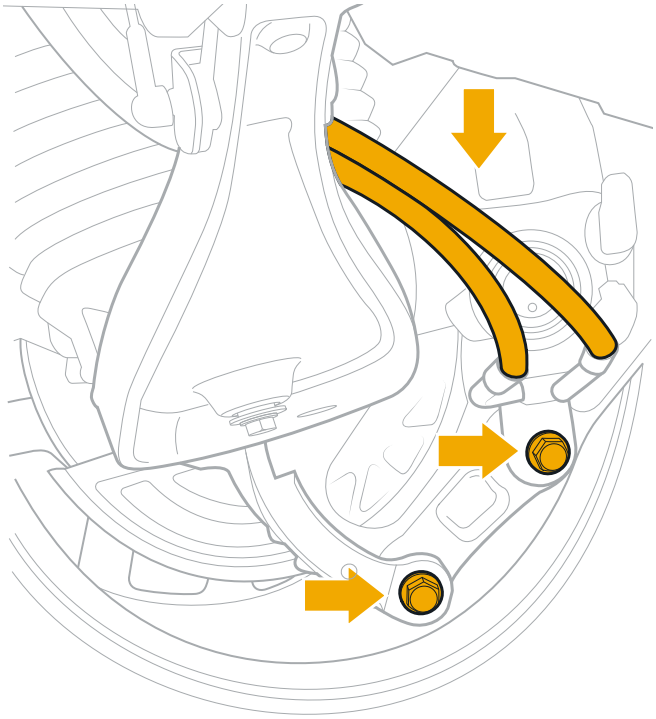

Wheels and Tires

DANGER

Off-road driving may cause vehicle damage that can lead to tire failure, loss of control, serious injury, or death. If you notice damage to a wheel or tire, change the wheel or tire prior to driving on the road.

- Inspect the sidewalls and tread of the tires for damage. If the sidewall is damaged, install a spare tire and repair the damaged tire as soon as possible.
- Inspect the wheels for significant damage.
- Check the torque of the lug nuts.
- Ensure the wheel center caps are secure.
- Check the air pressure in your tires.

Windows and Wipers

- Clean all windows to ensure visibility.
- Check that the wipers are working.

Sensors and Cameras

Inspect and clean the sensors and cameras. If you find damage, use the Rivian mobile app or contact Rivian to schedule service.

Lights and License Plates

- Verify that the exterior lights are intact and working. Clean the lights with a damp cloth as needed. If you find damage, use the Rivian mobile app or contact Rivian to schedule service.
- Clean the license plates and the license plate lighting as needed.

Front Active Grille Shutter

- Use the Rivian Torch to inspect the active grille shutter for any obstructions, such as mud, dust, or debris.
- To check the functionality of the active grille shutter and inspect the radiator fins:
  1. Turn on the climate system.
  2. Lower the temperature to start cooling the cabin.
  3. Check to see if the active grille shutter opens.
  4. Look past the open active grille shutter and see if the radiator fins have any obstructions.
- If there is an obstruction, use low-pressure running water to clear the obstruction as soon as possible.

CAUTION

Don't use high-pressure water to avoid damage to the air intake system.

- If you can't clear the obstruction, use the Rivian mobile app or contact Rivian to schedule service.

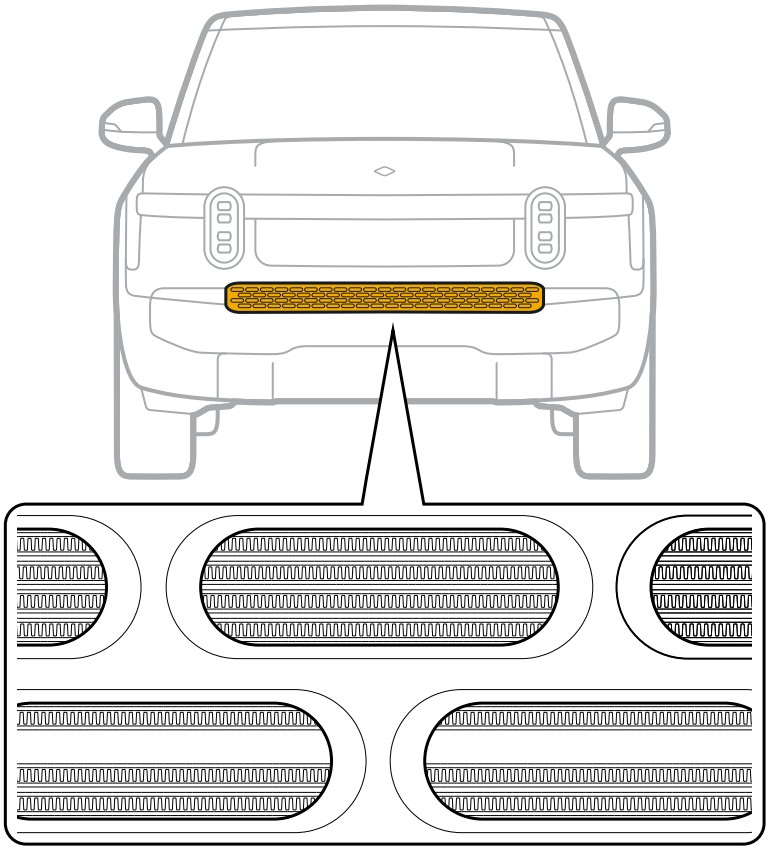

Underbody and Tow Hitch

- Check for any puddles underneath the vehicle after an extended period of time. If you find a puddle, use the Rivian mobile app or contact Rivian as soon as possible to schedule service.
- Inspect the underbody of the vehicle. Verify that all underbody panels are securely attached to the vehicle.
- If you find any new contact points where the underbody came into contact with the ground or an obstacle, use the Rivian mobile app or contact Rivian as soon as possible to schedule an inspection.

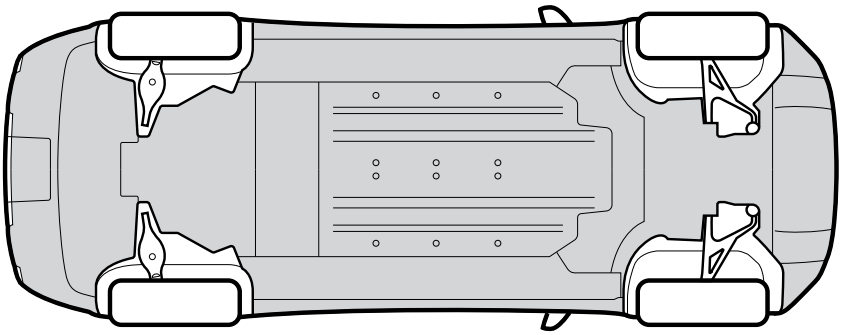

- If you find significant damage from an impact to the underside near the left rear bumper, use the Rivian mobile app or contact Rivian to schedule an inspection.

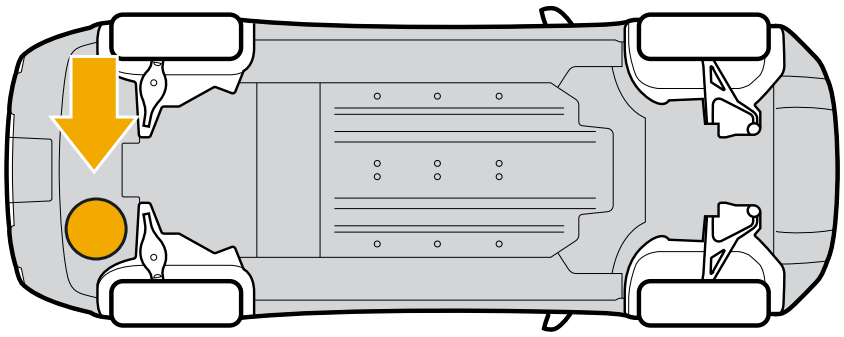

- Ensure the tow hitch is perpendicular to the fascia. If it is bent, use the Rivian mobile app or contact Rivian to schedule service.

Autonomy

Autonomy Introduction

About Autonomy

Autonomy features are designed to help with driving tasks, help prevent collisions, and help increase your safety while on the road.

> **NOTE**
> Depending on your vehicle model year and subscription status, not all features are available.

Autonomy Features

- **Adaptive Cruise Control (ACC):** Maintains a set speed and automatically accelerates and brakes to keep an appropriate distance from vehicles ahead of you in the current lane.
- **Highway Assist (HWA):** Performs all the ACC functions and steers the vehicle to keep it centered in the current lane.
  - Available only on controlled-access divided highways.
  - Requires Driver Attention Detection to be enabled, which is designed to confirm that you're attentive to the road.
- **Universal Hands-Free (UHF):** Performs all the HWA functions and allows you to go hands-free for an extended period of time in certain driving situations.
  - Available on all types of roads with clearly marked lanes.
  - Requires Driver Attention Detection to be enabled, which is designed to confirm that you're attentive to the road.
- **Lane Change on Command (LCC):** Performs lane changes in the direction of the turn signal while Universal Hands-Free is engaged.
- **Autonomy Drive Styles:** Allows you to customize the driving behavior of Highway Assist, Universal Hands-Free, Adaptive Cruise Control, and Lane Change on Command.
- **Curve Speed Assist (CSA):** Adjusts the vehicle's speed to provide additional safety and comfort when you drive on curvy roads.
- **Smart Turn Signal (STS):** Automatically turns off your turn signal after you complete a manual lane change on highways.
- **Go Chime:** Provides an audible notification when the vehicle ahead of you drives away at a stop, and you're not looking ahead.

Lane Safety

- **Lane Departure Warning (LDW):** Alerts you if the vehicle moves too close to lane markers or crosses the lane markers without a turn signal on.
- **Lane Keeping Assist (LKA):** Momentarily steers the vehicle toward the center of the lane if the vehicle moves too close to the lane markers or crosses them without a turn signal on.
- **Blind Spot Monitoring (BSM):** Shows a live camera view of your blind spot with the activation of a turn signal, and warns you when it detects vehicles in your blind spot with audible alerts and a flashing indicator in your side view mirrors.

Collision Mitigation

- **Forward Collision Warning (FCW):** Detects and warns of potential frontal collisions with other vehicles or pedestrians.
- **Automatic Emergency Braking (AEB):** Automatically applies the brakes to help mitigate or prevent a collision if you don't react in time to a warning.
- **Dynamic Brake Support (DBS):** Provides additional braking if you don't press the brake pedal hard enough to prevent an imminent collision.

Parking Safety

- **Park Assist Warning:** Warns you if an object is too close to the vehicle during low-speed parking maneuvers.
- **Rear Cross-Traffic Warning (RCTW):** Warns you of vehicles approaching from the sides behind your vehicle when in **R** (Reverse) or rolling backward in **N** (Neutral).

Light Safety

Adaptive High Beams Assist: Activates based on traffic and light conditions. Turns on the high beams when needed and reduces glare for drivers of oncoming or preceding vehicles.

Autonomy Sensors and Cameras

Front and Rear

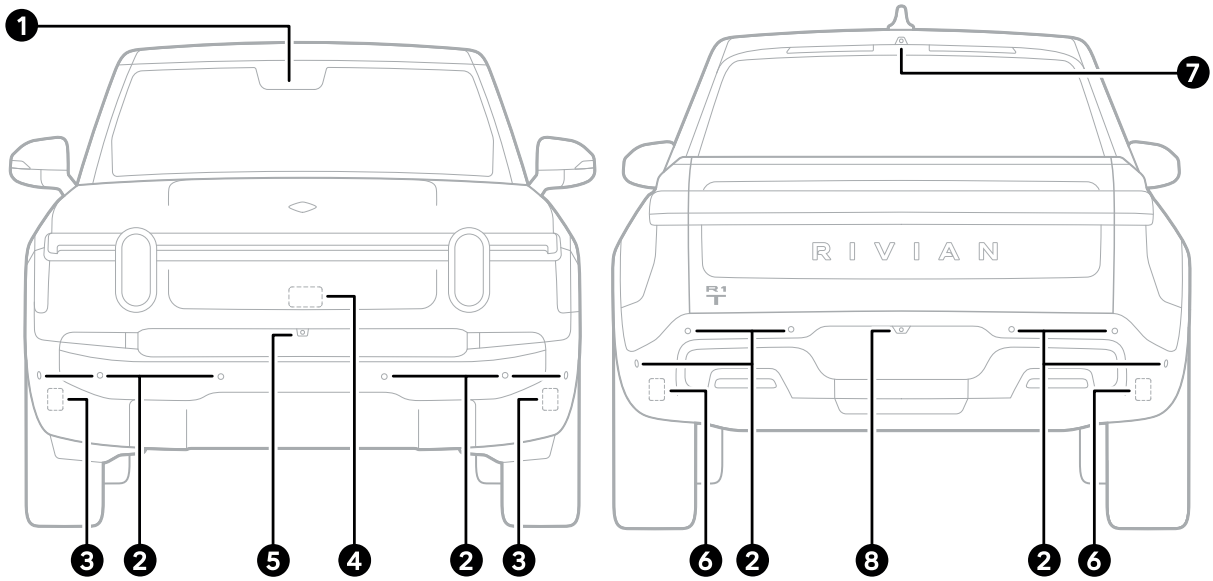

Item	Description
1	Front cameras
2	Ultrasonic sensors
3	Front corner radars
4	Front imaging radar sensor
5	Front surround view camera
6	Rear corner radars
7	Truck bed camera
8	Rear surround view camera

The interior camera is located in the rearview mirror facing the driver and is used to detect driver attention to the road.

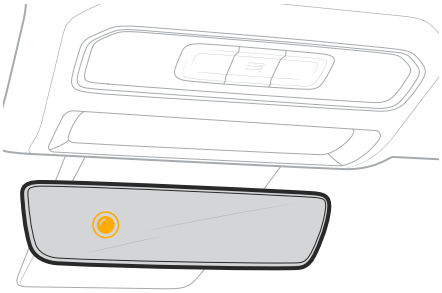

NOTE

If a sensor malfunctions, a red triangle with an exclamation mark appears at the bottom of the driver display.

Driver Side

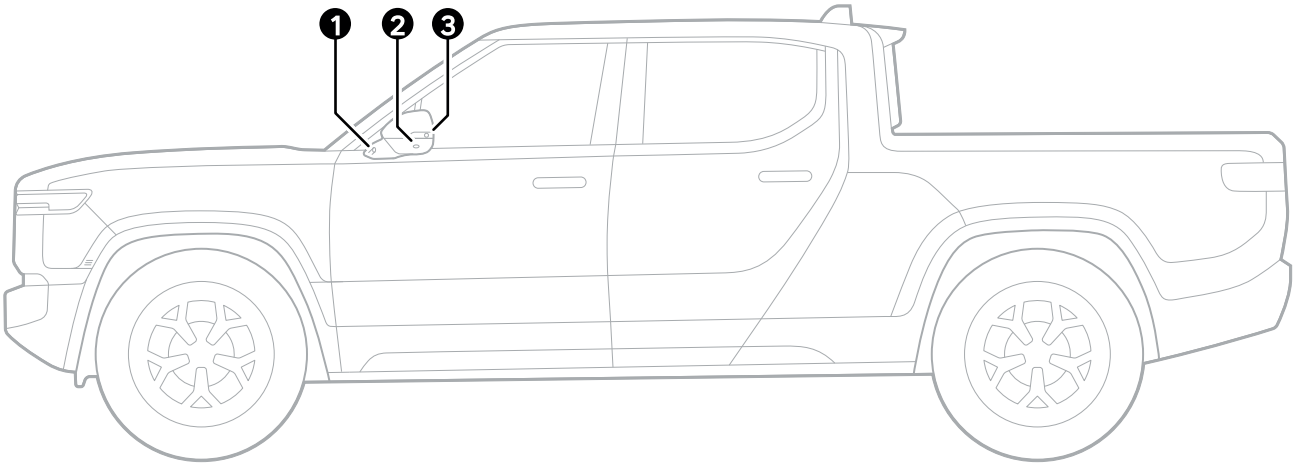

Item	Description
1	Wing camera
2	Surround view camera
3	Lane change camera

IMPORTANT

Keep all camera and sensor areas clean and free of obstructions. Don't apply film, stickers, metal plates, or other equipment that could block the cameras, radars, or sensors. Only use Rivian-supplied paint protective film (PPF).

Automatic Cameras

Different camera views make it easier to park in tight parking spots and provide additional visibility around the vehicle. The vehicle uses ultrasonic sensors to detect distance to nearby objects and automatically activates the front camera at low speeds.

You can adjust Automatic Camera settings on the center display by going to **Settings** ⚙ **> Autonomy > Automatic cameras**.

Toggle the camera to "on" to show a camera view on the center display under the following conditions:

- When Park Assist Warning detects objects, such as when you pull into a parking spot (front camera).
- When shifting from **R** (Reverse) to **D** (Drive) (front camera).
- When in **R** (Reverse) and the tailgate is down (truck bed camera).

> **NOTE**
> The front camera view activates when the vehicle speed is 6 mph (10 km/h) or less.

Autonomy View

Autonomy view provides a real-time, 360-degree visualization of your vehicle's surroundings on the driver display. It uses the vehicle's advanced sensors and compute system to detect, classify, and track objects on the road and lanes around your vehicle. It also displays visual warnings and the statuses of various features.

To adjust your driver display view, go to **Settings** ⚙ **> Autonomy > Driver display view**. You can also switch views while driving by pressing the right thumbwheel on your steering wheel.

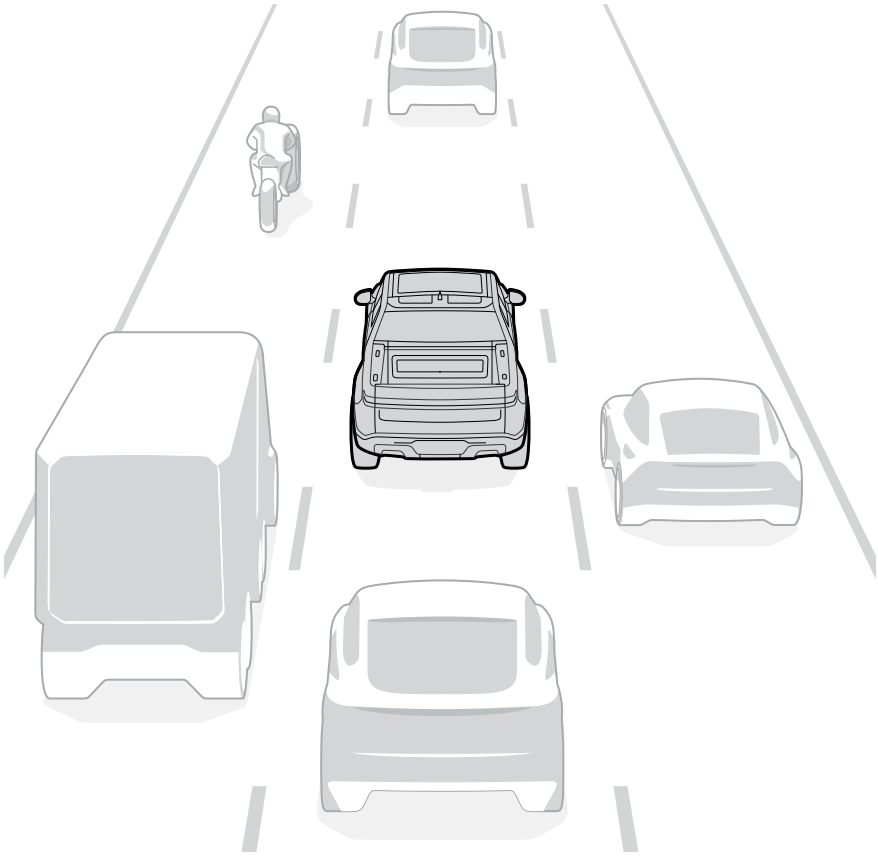

Autonomy Features

Settings and Safety Information

When you drive in traffic, Adaptive Cruise Control, Highway Assist, and Universal Hands-Free bring the vehicle to a complete stop and automatically resume in response to the vehicle in front. Highway Assist and Universal Hands-Free steer to keep the vehicle centered in the lane. Curve Speed Assist provides additional safety and comfort when driving on curvy roads. Lane Change on Command helps automatically and safely perform lane changes at your request while Highway Assist or Universal Hands-Free is engaged on highways. Smart Turn Signal automatically turns off your turn signal after a manual lane change is detected on highways. Go Chime provides an audible notification when the vehicle ahead of you drives away at a stop, and you're not looking ahead.

NOTES

- In areas where a posted speed limit is not detected, if you engage Adaptive Cruise Control, Highway Assist, or Universal Hands-Free while driving below the minimum activation speed, the feature will engage at 5 mph (8 km/h).
- Adaptive Cruise Control, Highway Assist, Universal Hands-Free, and Lane Change on Command are unavailable when you're towing a trailer. Refer to Manual Cruise Control.
- Refer to Trailer Profiles and Rear Accessory Mode for information on using Autonomy features with an accessory connected to the trailer hitch.
- Lane Change on Command won't perform lane changes into an upcoming merge, mandatory interchange, or mandatory exit lane.
- Lane Change on Command won't perform lane changes out of a mandatory exit lane if you're approaching an exit.
- Lane Change on Command may bring the vehicle back to the original lane if the lane change can't be completed because of road or traffic conditions.

IMPORTANT

- The features Adaptive Cruise Control, Highway Assist, Universal Hands-Free, and Lane Change on Command may be unavailable or may disengage if the radars are blocked, or the front camera visibility is reduced from a blockage, blur, or glare. In these cases, a chime sounds, and a notification appears in the driver display.
- Chassis, suspension, or tire modifications not approved by Rivian may affect the performance of the Autonomy features.

WARNING

- When Adaptive Cruise Control, Highway Assist, Universal Hands-Free, or Lane Change on Command is engaged, always monitor traffic and driving conditions, and be prepared to brake or steer if needed. These features, along with the speed engagement settings, are designed to support the driver and don't replace the driver's attention, judgment, and need to control the vehicle. These features won't prevent collisions in all situations.
- Adaptive Cruise Control, Highway Assist, and Universal Hands-Free don't adjust the set speed according to the posted speed limits. It's your responsibility to adjust the set speed according to the posted speed limit.
- When Highway Assist or Universal Hands-Free is engaged or Lane Change on Command is performing lane changes, the system periodically reminds you to keep your hands on the wheel.
- Universal Hands-Free doesn't follow navigation prompts or make turns in turn lanes.
- Universal Hands-Free doesn't slow or stop for upcoming traffic lights or stop signs. It is your responsibility to follow traffic rules.
- Highway Assist and Universal Hands-Free may not always be able to keep the vehicle centered in the lane. Be prepared to take over.
- Some state and local laws may require you to keep your hands on the steering wheel at all times. Only remove your hands from the steering wheel if Highway Assist or Universal Hands-Free is engaged, it is safe to do so, and it is permitted by state and local laws.

DANGER

- Adaptive Cruise Control, Highway Assist, Universal Hands-Free, and Lane Change on Command may disengage without warning due to road conditions, environmental conditions, or a system malfunction. Always be ready to take control of the vehicle.
- When Highway Assist or Universal Hands-Free is engaged, the system may ask you to pay attention to the road if the Driver Attention Detection system recognizes that you're not attentive.
- When the vehicle is about to enter a zone not supported by Universal Hands-Free, the system informs you to keep hands on the steering wheel.
- During a lane change, if the vehicle is neither able to complete the lane change nor return to the original lane, the feature issues warnings and disengages. Be prepared to take over control of the vehicle immediately.
- Failure to promptly take control of the vehicle may result in property damage, injury, or death.

Settings

Go to **Settings** ⚙ **> Autonomy** to toggle on or off settings for the following features.

For Adaptive Cruise Control and Highway Assist on divided highways:

- **On:** Engages Adaptive Cruise Control, Highway Assist, or Universal Hands-Free at the posted speed limit. This applies when the speed limit is higher than the current vehicle speed.
- **Off:** Engages Adaptive Cruise Control, Highway Assist, or Universal Hands-Free with the current vehicle speed as the set speed.

> **NOTE**
> This feature works on divided highways where there is traffic going in different directions, separated by a barrier.

> **WARNING**
> Use caution and control the vehicle as appropriate, such as on curvy roads where you may need to reduce your speed. When you're not driving on a divided highway, Adaptive Cruise Control and Universal Hands-Free engage with the current vehicle speed as the set speed regardless of the setting.

For Driver Display Views:

- **Autonomy view:** Shows a real-time, 360-degree visualization of your vehicle's surroundings on the driver display.
- **Maps and navigation:** Shows a map view and any active navigation session.

For Lane Change on Command:

- **On:** Enables Lane Change on Command to actively help you change lanes on the highway when you signal.
- **Off:** Disables Lane Change on Command.

For Exceed Set Speed (during Lane Change on Command):

- **On:** Allows the vehicle to temporarily exceed your Universal Hands-Free set speed during a Lane Change on Command maneuver by up to 5 mph (8 km/h).
- **Off:** Disables the Exceed Set Speed option, making your Universal Hands-Free set speed the maximum allowable feature speed.

For Smart Turn Signal:

- **On:** Enables Smart Turn Signal to automatically turn off your turn signals after a manual lane change on highways.
- **Off:** Disables Smart Turn Signal.

For Go Chime:

- **On:** Enables Go Chime to provide an audible notification when the vehicle ahead of you drives away at a stop, and you're not looking ahead.
- **Off:** Disables Go Chime.

Driving Conditions

WARNING

- Under certain conditions, Adaptive Cruise Control, Highway Assist, Universal Hands-Free, Lane Change on Command, and Curve Speed Assist may not work as expected.
- Adaptive Cruise Control, Highway Assist, and Universal Hands-Free may either brake when not required, or may not brake for vehicles and objects.
- Lane Change on Command may perform a lane change even when there is a vehicle close to you in the adjacent lane, or not perform a lane change when the lane is clear.

Severe Weather

WARNING

- Severe weather affects the performance of Adaptive Cruise Control, Highway Assist, Universal Hands-Free, Lane Change on Command, Go Chime, and Curve Speed Assist. Use your judgment when driving in heavy rain, snow, or other environmental conditions that reduce visibility around the vehicle.
- Adaptive Cruise Control, Highway Assist, Universal Hands-Free, and Lane Change on Command may disengage without warning in severe weather, extreme temperatures, or if there is glare on the front camera.
- Do not use Adaptive Cruise Control, Highway Assist, Universal Hands-Free, Lane Change on Command, and Curve Speed Assist on slippery, unpaved, wet, or snowy roads.

Sharp Curves and Steep Grades

WARNING

Roads with sharp curves or steep grades affect the performance of Adaptive Cruise Control, Highway Assist, Universal Hands-Free, Lane Change on Command, and Curve Speed Assist. Always be prepared to take control of the vehicle if needed.

Adjacent Vehicles and Merging Lanes

WARNING

- Adaptive Cruise Control, Highway Assist, and Universal Hands-Free don't accelerate or decelerate in response to vehicles or objects in adjacent lanes. Always watch for vehicles in adjacent lanes, especially when your driving lane merges into another lane.
- Lane Change on Command minimally adjusts speeds for vehicles in front of you in the adjacent lanes.
- Be prepared to take control of the vehicle if needed.

Road Conditions

WARNING

- The vehicle may not detect a speed limit or detect an incorrect speed limit on certain road segments that include, but are not limited to, on-ramps, exit ramps, and construction zones.
- Highway Assist and Universal Hands-Free may not perform as expected through road construction zones. Be prepared to take control of the vehicle if needed.
- Curve Speed Assist may not work as expected when you're traveling on uneven or loose surfaces such as gravel or sand.
- If the lane lines aren't clear, Smart Turn Signal may not work, and Lane Change on Command may not perform lane changes or perform incorrect lane changes.
- Lane Change on Command may perform erroneous lane changes in construction zones that use barriers (such as cones, barrels, or other types of barriers) to temporarily define the lane.
- Universal Hands-Free may not react promptly to road users around blind corners, intersection crossings, and narrow driving situations.

Driving Conditions

WARNING

Adaptive Cruise Control, Highway Assist, Universal Hands-Free, and Lane Change on Command may not work as expected under certain driving conditions. Such conditions include, but are not limited to, the following:

- When you closely follow a vehicle ahead of you in the driving lane, or if a vehicle suddenly cuts into the driving lane.
- When a vehicle or object is partially in the driving lane, such as in a merge, split, or turn lane.
- When you change lanes and the vehicle detects a stationary or slow-moving vehicle or object ahead.
- In a busy urban or residential area with rapidly changing road conditions, pedestrians, cyclists, intersections, and roundabouts.
- If a motorcycle that is splitting lanes is approaching your vehicle from either side.
- If a motorcycle is splitting the lane with your vehicle over long periods of time.
- If large vehicles such as buses or semi-trucks are driving closely behind you or in your blind spot areas.

CAUTION

Autonomy features may not work as designed if an accessory connected to the vehicle interferes with detections, or is too heavy or large. It is your responsibility to select the correct profile upon connecting an accessory.

The following shows examples of the Autonomy icons in their various states. When the icon appears near the speedometer while you're driving, grey represents an "available" state, and blue represents an "active" state. The car icon can also change to grey while a feature is still active if the system doesn't detect a vehicle ahead.

Icon	Function
	Highway Assist Available
	Universal Hands-Free Available
	Adaptive Cruise Control Active
	Adaptive Cruise Control Active and Highway Assist Available
	Adaptive Cruise Control Active and Universal Hands-Free Available
	Universal Hands-Free Active
	• Highway Assist Active • Universal Hands-Free Hands-On Mode Active

Adaptive Cruise Control

Adaptive Cruise Control (ACC) maintains a set speed and automatically accelerates and brakes to keep an appropriate distance from vehicles ahead of you in the current lane.

Operating Conditions

- You're not in an off-road drive mode or towing a trailer.
- Lane lines are clearly visible upon engaging the feature.
- You're traveling within the activation speed range: 5 to 85 mph (8 to 136 km/h).

If you're traveling under the minimum activation speed, you can't activate Adaptive Cruise Control unless there is a vehicle in front of you within a certain sensing range, and the steering wheel is not turned.

Engage Adaptive Cruise Control

To engage Adaptive Cruise Control while driving, pull the drive stalk toward you and then release. The vehicle chimes to alert you that Adaptive Cruise Control is engaged. The set speed and Adaptive Cruise Control icon appear near the speedometer on the driver display.

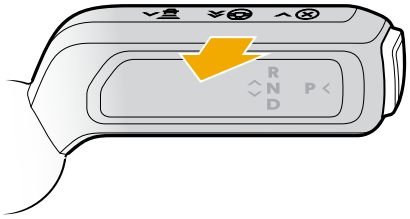

NOTES

- Regenerative braking slows down the vehicle after you disengage Adaptive Cruise Control.
- Adaptive Cruise Control disengages immediately if you open any door, unbuckle the driver seat belt, or if you shift the vehicle out of Drive.
- The vehicle can automatically adjust the ride height based on the vehicle speed. Refer to Automatic Ride Height Changes.

Change the Speed and Following Distance

After you engage the Adaptive Cruise Control, you can adjust the set speed and minimum following distance with the controls on the right hand side of the steering wheel.

NOTE

You can also press the accelerator pedal to temporarily accelerate above the set speed, and release the accelerator to resume Adaptive Cruise Control.

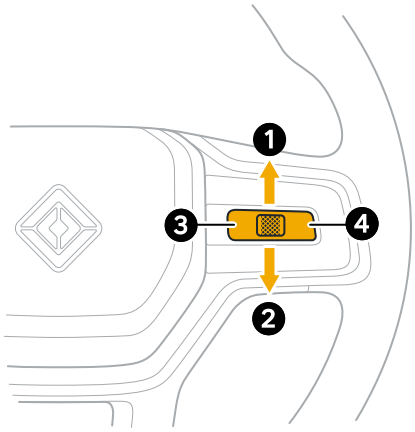

Item	Control	Function
1	Thumbwheel up	Increase speed • **Single scroll:** Increase by 1 mph (1 km/h) • **Quick scroll:** Increase by 5 mph (10 km/h)
2	Thumbwheel down	Decrease speed • **Single scroll:** Decrease by 1 mph (1 km/h) • **Quick scroll:** Decrease by 5 mph (10 km/h)
3	Left thumb control button	Select a milder Autonomy Drive Style.
4	Right thumb control button	Select a spicier Autonomy Drive Style.

NOTES

- You can also use the drive stalk to set a new Adaptive Cruise Control or Highway Assist speed. Accelerate to a new speed, pull the drive stalk toward you, and then release.
- If the "Speed Limit" option is selected in the Set Speed setting, you can pull the drive stalk toward you for 0.5 seconds and release to update the set speed to the posted speed limit when you're driving on a divided highway.

Disengage Adaptive Cruise Control

To disengage Adaptive Cruise Control, push the drive stalk away from you and then release, or tap the brake pedal.

Adaptive Cruise Control Hold

When Adaptive Cruise Control is engaged and the traffic stops in front of you, Adaptive Cruise Control stops the vehicle. If you are stopped and not looking ahead for an extended period of time, the vehicle pauses Adaptive Cruise Control. To resume Active Cruise Control, tap the accelerator pedal, or pull the drive stalk toward you once.

> **NOTE**
>
> If Adaptive Cruise Control decelerates the vehicle to a complete stop and then remains stopped for 10 continuous minutes, Adaptive Cruise Control disengages and automatically shifts the vehicle to **P** (Park).

Highway Assist

On select highways, Highway Assist (HWA) performs all the Adaptive Cruise Control (ACC) functions and steers the vehicle to keep it centered in the current lane. Highway Assist requires you to keep your hands on the steering wheel and relies on Driver Attention Detection to confirm that you're looking at the road ahead.

Driver Attention Detection

Driver Attention Detection uses the interior camera to track head and eye movements and confirm your attention to the road, enabling Autonomy features such as Highway Assist and Universal Hands-Free. Driver Attention Detection processes interior camera images in-vehicle, and only certain data, such as the detected direction of the driver's gaze, is recorded and shared with Rivian.

Images and videos are not recorded or shared unless you allow data sharing for the interior camera. See "Driver Attention Detection" in Data and Privacy.

Certain head and face coverings such as some sunglasses, hats, or other types of clothing that obscure facial or head features may interfere with system performance. To improve camera performance, do the following:

- Ensure that the rearview mirror is clean and properly positioned.
- Adjust your seating position as needed.
- Remove any objects that cover your face or eyes.

Driver Attention Detection is on by default. You can update your Driver Attention Detection settings on the Data and privacy screen on the center display.

Operating Conditions

- You're not in an off-road drive mode or towing a trailer.
- You're centered in your lane.
- There are clear lane lines visible to the system.
- GPS has confirmed that the vehicle is on a supported highway.
- The Highway Assist Available icon is present on the driver display.
- Your hands are on the steering wheel.
- You're traveling within the activation speed range: 5 to 85 mph (8 to 136 km/h).

If you're traveling under the minimum activation speed, you can't activate Highway Assist unless there is a vehicle in front of you within a certain sensing range, and the steering wheel is not turned.

Engage Highway Assist

If the Highway Assist Available icon appears near the speedometer while you're driving, you can engage Highway Assist. The icon changes states when the feature is engaged.

To engage Highway Assist, pull the drive stalk toward you twice within 2 seconds and then release. The vehicle chimes to alert you that Highway Assist is engaged. Highway Assist automatically steers the vehicle to keep it centered in the lane.

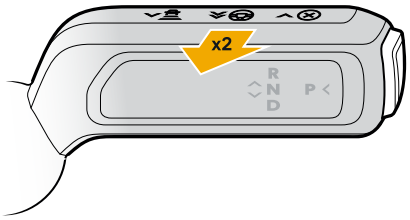

State	Stalk Action	Speed	Result
Highway Assist available	Pull toward you two times	Slowly	Highway Assist engages
Highway Assist unavailable	Pull toward you two times	Slowly	Adaptive Cruise Control engages

NOTES

- If you turn the steering wheel while Highway Assist is engaged, the system switches to Adaptive Cruise Control at the set speed.
- Adaptive Cruise Control and Highway Assist reduce the vehicle's speed when cornering.
- The Highway Assist Available icon doesn't appear if you aren't centered in the lane.
- Highway Assist only functions on certain divided or controlled-access highways.
- If Highway Assist is unavailable when you try to engage it, the vehicle chimes and notifies you that the feature is unavailable.

Co-Steer

While Highway Assist is engaged, you can use the steering wheel to make minor adjustments in certain situations such as leaving room for a motorcycle, moving away from a truck in an adjacent lane, or avoiding a pothole. When you let go of the steering wheel, the vehicle will re-center in the lane with Highway Assist still engaged.

IMPORTANT

The following will cancel Highway Assist engagement:

- Jerking the steering wheel
- Over-steering
- Steering into an unsupported lane, such as a split or exit lane
- Departing the lane without a turn signal engaged

Highway Assist Re-engage

To change lanes manually when Highway Assist is active:

1. Engage the turn signal.
2. Turn the steering wheel in the indicated direction, and center the vehicle in the desired lane.

As you perform the move, Highway Assist automatic steering disables, but Adaptive Cruise Control remains active. When you center the vehicle in the new lane, the turn signal automatically shuts off, Highway Assist automatic steering re-enables, and a chime sounds to confirm.

CAUTION

When manually changing lanes in Highway Assist:

- You are responsible for steering the vehicle and must have your hands on the wheel.
- The vehicle continues to control acceleration and braking. Always monitor your surroundings and be prepared to take over control.
- The vehicle won't react to vehicles in the adjacent lane. It is your responsibility to determine the safety of a lane change.

The vehicle cancels Highway Assist and transitions into Adaptive Cruise Control when you do one of the following:

- At the start of a lane change, turn the steering wheel in a direction other than the indication of the turn signal
- Take too long to complete a lane change
- Move into a lane that doesn't support Highway Assist (such as a mandatory exit lane)

Disengage Highway Assist

To disengage Highway Assist, push the drive stalk away from you, or press the brake pedal.

Driver Take Over Request

In certain road conditions or when system failures occur, Highway Assist provides audible and visual notifications for you, the driver, to take control. If you don't take control of the vehicle within a certain period of time, Highway Assist continues to provide warnings and starts decelerating. While the vehicle is decelerating, you can either push the drive stalk away from you one time and release, or press the brake pedal to take full control of the vehicle. If you don't take control of the vehicle, Highway Assist brings the vehicle to a complete stop and then automatically turns on the hazard lights. Highway Assist then remains unavailable until you shift out of **P** (Park) to start a new drive cycle.

Universal Hands-Free

Universal Hands-Free steers, accelerates, and brakes your vehicle on roads with marked lanes, allowing you to let go of the steering wheel for extended periods, as long as you're looking at the road. Universal Hands-Free relies on Driver Attention Detection to confirm that you're attentive to the road ahead of you.

Driver Attention Detection

Driver Attention Detection uses the interior camera to track head and eye movements and confirm your attention to the road, enabling Autonomy features such as Highway Assist and Universal Hands-Free. Driver Attention Detection processes interior camera images in-vehicle, and only certain data, such as the detected direction of the driver's gaze, is recorded and shared with Rivian.

Images and videos are not recorded or shared unless you allow data sharing for the interior camera. See "Driver Attention Detection" in Data and Privacy.

Certain head and face coverings such as some sunglasses, hats, or other types of clothing that obscure facial or head features may interfere with system performance. To improve camera performance, do the following:

- Ensure that the rearview mirror is clean and properly positioned.
- Adjust your seating position as needed.
- Remove any objects that cover your face or eyes.

Driver Attention Detection is on by default. You can update your Driver Attention Detection settings on the Data and privacy screen on the center display.

Operating Conditions

- Your hands are on the steering wheel at the time of Universal Hands-Free engagement.
- Your attention to the road is confirmed by Driver Attention Detection.
- There are no upcoming sharp curves, turns, or stop signs.
- You're not driving in a parking lot or an intersection.
- You're not in an off-road drive mode or towing a trailer.
- There are clear lane lines visible to the system.
- You're centered in your lane.
- You're traveling within the activation speed range: 5 to 85 mph (8 to 136 km/h).

> **NOTE**
> If you're traveling under the minimum activation speed, you can't activate Universal Hands-Free unless there is a vehicle in front of you within a certain sensing range and the steering wheel is not turned.

Engage Universal Hands-Free

When Universal Hands-Free is available on a marked local roads as indicated by the Universal Hands-Free icon near the speedometer, pull the drive stalk toward you twice within 2 seconds and then release. The icon changes states when the feature is engaged.

DANGER

- Universal Hands-Free is an advanced Autonomy feature designed to support the driver, but does not replace the driver's attention, judgment, and need to control the vehicle.
- Universal Hands-Free doesn't make your vehicle autonomous or self-driving. Stay alert at all times at road conditions. Always be prepared to take control of the vehicle if needed.
- Universal Hands-Free isn't a point-to-point system and doesn't make turns or follow navigation instructions. If you're in a turn-only lane, you must take control of the vehicle and steer it appropriately.
- Universal Hands-Free doesn't automatically stop at traffic lights and stop signs. Notifications may appear, and you must take the appropriate action in these scenarios. It is your responsibility to follow traffic laws.
- Universal Hands-Free doesn't automatically update the set speed as the speed limits change. It is your responsibility to monitor the posted speed limits and adjust the set speed.
- Don't use Universal Hands-Free in unsupported conditions such as when a trailer is connected, the vehicle tows heavy loads, or clearly marked lanes aren't present.
- Don't use Universal Hands-Free on slippery, unpaved, wet, or snowy roads.

Co-Steer

While Universal Hands-Free is engaged, you can use the steering wheel to make minor adjustments in certain situations such as leaving room for a motorcycle, moving away from a truck in an adjacent lane, or avoiding a pothole. When you let go of the steering wheel, the vehicle will re-center in the lane with Universal Hands-Free still engaged.

IMPORTANT

The following will cancel Universal Hands-Free engagement:

- Jerking the steering wheel
- Over-steering
- Steering into an unsupported lane, such as a split or exit lane
- Departing the lane without a turn signal engaged

Disengage Universal Hands-Free

Disengage Universal Hands-Free in one of the following ways:

- Push the drive stalk away from you.
- Tap the brake pedal.

NOTES

- Universal Hands-Free may provide visual and audible cues prompting you to pay attention to the road ahead if it detects driver distraction, such as when your head and eyes are directed away from the road.
- Universal Hands-Free may prompt you to keep your hands on the steering wheel in certain situations, including, but not limited to high curves and poor weather conditions.
- Universal Hands-Free is unavailable if Driver Attention Detection is turned off, malfunctioning, or blocked.

Driver Take Over Request

Universal Hands-Free may ask you to take over or keep your hands on the steering wheel by providing audible and visual notifications in the following cases:

- When you're approaching an intersection, traffic light, or stop sign.
- When you're approaching a high curvature, a road with unclear lane lines, or other driving or road situations where the feature is not supported.
- When one or more systems has degraded, preventing hands-free use.
- In some severe weather conditions.

If you don't look at the road when prompted or don't take control of the vehicle within a certain period of time, Universal Hands-Free continues to provide warnings and starts decelerating the vehicle. During this time, you can push the drive stalk away to take full control of the vehicle. If you don't take control, Universal Hands-Free brings the vehicle to a complete stop and then automatically turns on the hazard lights. Universal Hands-Free and Highway Assist then remain unavailable until you shift out of **P** (Park) to start a new drive cycle.

DANGER

- Always remain attentive and take control of the vehicle to perform the appropriate action as necessary. It is your responsibility to follow traffic rules.
- In certain scenarios, Universal Hands-Free may not function as expected and may instead:
  - Position the vehicle incorrectly on roads without lane markings
  - Unexpectedly slow down for double-parked cars, especially on narrow roads
  - Steer into an undesired lane in situations including, but not limited to, splits, intersections, or a lane next to an exit on highways
  - Not slow down promptly or drive around a vehicle or an object that partially blocks the driving path
- Universal Hands-Free won't do the following:
  - Drive the vehicle through high curvature roads such as roundabouts and sharp turns
  - Detect special-use lanes such as bike lanes, bus lanes, and emergency lanes
  - Detect and react to oncoming or crossing vehicles, uncommon objects, or odd-shaped objects including, but not limited to, open doors, barrels, poles, debris, and trailers
  - React promptly to road users around blind corners, crossing intersections, and narrow driving situations
  - Automatically update the set speed as the speed limits change
  - Slow down or stop for speed bumps, upcoming traffic lights, or stop signs
  - Steer in response to temporary lane lines marked by cones, barrels, or similar construction materials
  - React to special crossing scenarios such as railway crossings
  - Follow navigation prompts or make turns in turn lanes

Lane Change on Command

Lane Change on Command automatically performs lane changes at your request while Universal Hands-Free is engaged. Lane Change on Command may bring the vehicle back to the original lane if the lane change can't be completed because of road or traffic conditions.

Operating Conditions

- Universal Hands-Free is engaged.
- You can also use Lane Change on Command if you are traveling between 20 to 50 mph (32 to 80 km/h). In this case, a vehicle must be detected in the lane into which you want to move, and must be traveling at an appropriate distance and speed, for your vehicle to make the lane change.

Engage Lane Change on Command

To request a lane change, turn on the turn signal in the intended direction of lane change by pushing the lights stalk up or down to the second click.

When Lane Change on Command starts performing the lane change, animations appear on the driver display to indicate the status of the lane change. After a lane change successfully completes, the turn signals automatically turn off.

Lane Change on Command provides visual cues if the adjacent lane is blocked by a vehicle. In order to create the necessary gap, your vehicle may do the following:

- Slow down, indicated by chevrons going toward the vehicle graphic on the driver display
- Accelerate closer to the vehicle in front than the selected gap distance, indicated by chevrons going away from the vehicle graphic on the driver display

If the feature is unable to find a gap and complete the lane change in 30 seconds, the lane line in the driver display flashes red, and the vehicle chimes, indicating a timeout. If there is a large difference between your speed and that of vehicles in the target lane, the lane change request may also be rejected. You can request a new lane change after the timeout.

When you request a lane change into a lane that isn't supported by the feature, such as mandatory exit, merge lane, or shoulder of the highway, the lane line in the driver display turns red momentarily, and the vehicle chimes.

NOTES

- If you turn the steering wheel during the lane change, Lane Change on Command disengages, and the system switches to Highway Assist Re-engage.
- While a lane change is in progress, if you turn off the turn signals or change the turn signal direction, the vehicle will either complete the lane change or return to the original lane depending on the vehicle's position during the lane change.

Exceed Set Speed Threshold

You have the option of allowing the vehicle to temporarily exceed your set speed for Universal Hands-Free when performing a Lane Change on Command. When this feature is enabled, your vehicle may exceed the set speed by up to 5 mph (8 km/h) to find a gap in the adjacent lane. This option reduces the number of times that your vehicle attempts to change lanes behind a slow-moving vehicle in the target lane, allowing your vehicle to speed up and change lanes into a more probable gap.

To toggle this option on or off, go to **Settings ⚙ > Autonomy > Exceed set speed**.

Disengage Lane Change on Command

You can disengage Lane Change on Command in the following ways:

- Disengage Universal Hands-Free.
- Turn the steering wheel while Lane Change on Command is engaged.
- Toggle Lane Change on Command to "Off" in **Settings ⚙ > Autonomy**.

CAUTION

- Lane Change on Command is designed to detect vehicles in adjacent lanes; however, it is your responsibility to visually check that the target lane is clear before you request a lane change.
- Always monitor the surrounding areas, and be prepared to take over control of the vehicle at any time.
- There may be scenarios where the vehicle can neither complete the lane change nor return to the original lane.
- Lane Change on Command may not slow down the vehicle quickly enough if the vehicle in front of you brakes aggressively.
- Lane Change on Command may perform erroneous lane changes if clear lane lines are not visible. Scenarios include, but are not limited to, faded or missing lane lines, or lane lines covered by cones, barrels, other objects or debris.
- Lane Change on Command may not work as expected when an accessory such as a trailer, bike rack, or cargo basket is attached to the tow hitch.

Autonomy Drive Styles

Autonomy Drive Styles allows you to customize the driving behavior of Highway Assist, Universal Hands-Free, Adaptive Cruise Control, and Lane Change on Command.

Choose among the following options:

- **Mild:** A relaxed driving experience
- **Medium:** A balanced ride
- **Spicy:** A more dynamic drive

Autonomy Drive Styles adjusts the following:

- The gap your vehicle maintains from the vehicle ahead, and in the target lane, while making a lane change
- How quickly your vehicle accelerates to reach the set speed
- How early your vehicle brakes in response to the vehicle ahead to maintain a safe gap
- How quickly your Rivian performs a lane change

To change Autonomy Drive Styles, press the thumb control buttons on the right side of the steering wheel.

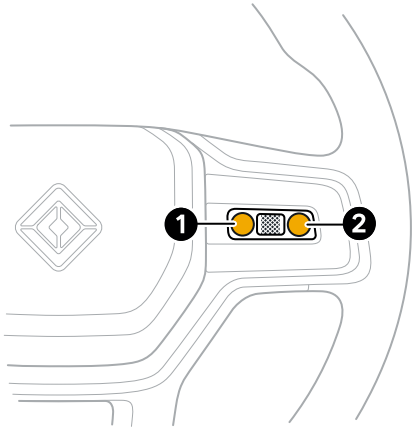

Item	Control	Function
1	Left thumb control button	Cycle down among the drive styles (Mild is the minimum)
2	Right thumb control button	Cycle up among the drive styles (Spicy is the maximum)

IMPORTANT

The Spicy drive style is unavailable under the following conditions:

- Snow Mode is selected as the vehicle drive mode.
- Slippery road conditions are detected when the ambient temperature is close to freezing.

CAUTION

- Autonomy Drive Styles requires driver input and doesn't automatically change based on factors including, but not limited to, weather, road conditions, tire conditions, or traffic conditions.
- Autonomy Drive Styles doesn't limit or change the set speed.

NOTE

The system remembers the last selected Autonomy Drive Style, which is applied again upon engagement of Adaptive Cruise Control, Highway Assist, or Universal Hands-Free.

Curve Speed Assist

Curve Speed Assist (CSA) provides additional safety and comfort to Adaptive Cruise Control, Highway Assist, and Universal Hands-Free when driving on curvy roads. Curve Speed Assist adjusts the vehicle's speed based on road curves and the driver's steering input.

Operating Conditions

- You're not in an off-road drive mode or towing a trailer.
- You're traveling within the activation speed range: 5 to 85 mph (8 to 136 km/h).

Engage Curve Speed Assist

Chevrons appear in front of the vehicle graphic on the driver display to indicate that Curve Speed Assist is engaged, and that your vehicle is slowing down.

NOTE

Curve Speed Assist operates only when Adaptive Cruise Control is on and not during manual driving.

WARNING

- In certain conditions such as a high-speed approach to a curve or a road with sharp curves, Curve Speed Assist may not reduce speed sufficiently. Don't rely solely on Curve Speed Assist to control the vehicle.
- Curve Speed Assist doesn't monitor posted speed limits.
- Curve Speed Assist is designed to support the driver and doesn't replace the driver's attention, judgment, and need to control the vehicle.

Smart Turn Signal

Smart Turn Signal automatically turns off the continuous turn signal after you complete a manual lane change on highways and settle in the new lane.

NOTES

- If you're unable to complete a lane change within 20 seconds of initiating the turn signal, Smart Turn Signal automatically turns off the signal.
- Smart Turn Signal turns off the turn signal after a lane change regardless of the navigation selection or lane type (such as a turn-only lane).
- Smart Turn Signal may not turn off the turn signal if you make a lane change through a merge or split lane.
- If lane markings aren't clear, Smart Turn Signal may not turn off the signal. To manually turn off the turn signal, push the stalk in the opposite direction as the intended turn signal:
  - Up for a right turn
  - Down for a left turn

Operating Conditions

- You're traveling under the speed of 108 mph (175 km/h).
- You're traveling on a major highway.
- Lane markings are clearly visible.

Go Chime

Go Chime provides an audible notification when the vehicle ahead of you drives away at a stop, and you're not looking ahead.

NOTES

- Go Chime does not react to traffic light changes.
- Go Chime may not provide a warning in the following scenarios:
  - In stop-and-go situations when Highway Assist, Universal Hands-Free, or Automatic Cruise Control is active
  - In rolling stop-and-go conditions
  - If the vehicle in front moves very slowly or very little

WARNING

- Go Chime is an Autonomy feature and should not be relied on solely for vehicle detection. It is your responsibility to monitor traffic conditions before driving away from a stop
- Go Chime may not work as expected under certain conditions. Go Chime may chime when not required, or may not chime when the vehicle in front moves away. Such situations include, but are not limited to, the following:
  - The vehicle in front is too much to the left or right of your vehicle.
  - The vehicle in front is too far from your vehicle.
  - The front camera or radar is obstructed or blocked by dirt or debris.

Operating Conditions

- Go Chime alerts only work when the vehicle is fully stopped.
- Go Chime may provide a warning when you've been at a stop for an extended time with Highway Assist or Automatic Cruise Control engaged.

Lane Safety

Settings and Safety Information

Lane safety features include Lane Departure Warning, Lane Keeping Assist, and Blind Spot Monitoring. These features use sensors and cameras on the side view mirrors and behind the rearview mirror to help keep you safely centered in your lane and warn you of vehicles in your blind spot when you change lanes.

IMPORTANT

Keep the windshield and area around the front camera in good condition and clear of any obstructions. Lane safety features may not detect an unintentional lane departure if the front camera is blocked or malfunctions.

WARNING

Lane Keeping Assist, Lane Departure Warning, and Blind Spot Monitoring are designed to support the driver and don't replace the driver's attention, judgment, and need to control the vehicle. You're still required to keep your hands on the steering wheel at all times, even with these features turned on. Visually check that no vehicles are present in your blind spots to safely change lanes.

Settings

Go to **Settings** ⚙ **> Autonomy** on the center display to manage the lane safety features.

- **Lane Departure Warning:** Toggle on to receive warnings if you drift too close to lane markers or outside your lane without a turn signal engaged.
  - **Alert Timing:** Choose how early you'd like to be alerted on lane departure.
  - **Alert Type:** Choose sound, steering wheel vibration, or both types of alerts.
- **Lane Keeping Assist:** Toggle on to get a steering wheel nudge and keep your vehicle in your lane. Lane Departure Warning needs to be on for Lane Keeping Assist to be on.
- **Blind Spot View:** Toggle the live blind spot camera on or off when you activate a turn signal.
- **Blind Spot Warning:** Toggle the audio alert on or off. If turned on, the audio alert chimes if you have a turn signal on and there is a vehicle detected in the blind spot on the side of the turn signal.

NOTE

If Lane Keeping Assist is on, you may receive alerts to keep control of the steering wheel. Alerts are a combination of visual notification on the driver display, audio chimes, and steering wheel vibrations. Alerts gradually increase in length and intensity if your hands aren't on the steering wheel.

Driving Conditions

Lane safety features may not work as expected in certain environments and driving situations. The features may either not warn or provide a false warning under such conditions that include, but are not limited to, the following:

Severe Weather

WARNING

Severe weather conditions such as strong direct sunlight, heavy fog, snow, rain, or extreme temperatures.

Blocked or Damaged Equipment

WARNING

- The front camera or sensors are blocked with things such as mud, dirt, rain, snow, or ice, stickers, or metallic objects.
- The windshield has become fogged or damaged.
- The radar is out of position.

Road Conditions

WARNING

- Sharp curves, hilly roads, or uneven road surfaces.
- Unclear road markings because of faded line marks and shadows over roads.

Tow Hitch

WARNING

A trailer, bike rack, or cargo basket is attached to the tow hitch.

Driving Conditions

WARNING

- During lane changes.
- On uneven roads or roads with different lane heights.
- When a fast-approaching vehicle passes.
- When a motorcycle, bicycle, or small car is in the blind spot.
- When you drive past non-moving objects on a narrow road, such as trees or parked cars.

Lane Departure Warning

Lane Departure Warning (LDW) uses an audio alert, steering wheel vibration, and alert graphic on the driver display that shows if the vehicle moves too close to lane markers or crosses the lane markers without a turn signal on.

The Lane Departure Warning status indicator appears on the driver display if the feature malfunctions.

Operating Conditions

- You're not in Snow mode or an off-road drive mode.
- Lane markings and road edges are clearly visible.
- You're traveling within the activation speed range: 44 to 108 mph (71 to 174 km/h).

Lane Keeping Assist

Lane Keeping Assist (LKA) momentarily steers the vehicle toward the center of the lane if the vehicle moves too close to the lane markers or crosses the lane markers without a turn signal on.

Operating Conditions

- You're not in Snow mode or an off-road drive mode.
- Lane markings and road edges are clearly visible.
- You're traveling within the activation speed range: 44 to 108 mph (71 to 174 km/h).
- You're not towing a trailer.
- Lane Departure Warning is turned on.

Blind Spot Monitoring

Blind Spot View (BSV) and Blind Spot Warning (BSW) are monitoring features that assist you in making lane changes and turns more safely.

- Blind Spot View shows a live camera view when you activate a turn signal. On the driver display, a camera view flies in from the direction of the turn to show the blind spot area to the side of your vehicle. A red border shows around the live camera view, depending on the proximity of vehicles in your blind spots.
- Blind Spot Warning alerts you when it detects vehicles in your blind spots to either side of your vehicle. A warning indicator also appears on the side view mirrors. The indicator flashes, and an audible alert plays.

The Blind Spot Warning status indicator appears on the driver display if the feature malfunctions.

Operating Conditions

- You're not in an off-road drive mode or towing a trailer.
- Another vehicle is detected within the blind spot sensing range on either side of your vehicle.
- The speed difference between your vehicle and the vehicle in your blind spot is less than 12 mph (20 km/h).
- You're traveling within the activation speed range: 6 to 108 mph (10 to 174 km/h).

Collision Mitigation

Settings and Safety Information

Collision mitigation features include Forward Collision Warning, Automatic Emergency Braking, and Dynamic Brake Support. These features warn you of potential frontal collisions and apply the brakes in attempt to prevent an imminent collision if you don't react in time.

IMPORTANT

Keep the windshield, headlamps, front camera, and front radar in good condition and clear of any obstructions. Automatic Emergency Braking may not detect people or cars ahead if the front camera or front radar sensors are blocked or malfunctioning.

WARNING

- Forward Collision Warning, Automatic Emergency Braking, and Dynamic Brake Support are features designed to support the driver and don't replace the driver's attention, judgment, and need to control the vehicle.
- Forward Collision Warning and Automatic Emergency Braking may unexpectedly alert the driver and/or apply braking as a response to certain traffic conditions such as road debris, traffic signs, overhead passes, guardrails, bridges, tunnels, metal plates on the road, and other non-moving objects. In these scenarios, if it is safe to do so, the driver can press the accelerator pedal firmly to override the Automatic Emergency Braking.

Settings

Go to **Settings** ⚙ **> Autonomy** on the center display to manage the collision mitigation features.

For Forward Collision Warning:

- **On or Off:** Toggle on to get a warning of potential collisions with people and vehicles ahead of you.
- **Alert Timing:** Choose how early you'd like to receive the alert.

For Automatic Emergency Braking:

- **On or Off:** Toggle on to allow the vehicle to apply the brakes, helping mitigate or prevent a collision.

NOTES

- Both Forward Collision Warning and Automatic Emergency Braking are on by default.
- If you turn a feature off, the feature defaults back to on when you restart the vehicle.
- Forward Collision Warning must be on for you to turn on Automatic Emergency Braking.

Driving Conditions

Forward Collision Warning, Automatic Emergency Braking, and Dynamic Brake Support may not work as expected in certain environments and driving situations. The features may either not warn or provide a false warning under such conditions that include, but are not limited to, the following:

Severe Weather

WARNING

Severe weather or low visibility conditions such as nighttime, strong direct sunlight, heavy fog, snow, rain, or extreme temperatures.

Road Conditions

WARNING

- Unpaved roads, high curvature roads, and off-road terrain.
- Steep grades, rapid grade changes, or uneven road surfaces.

Driving Conditions

WARNING

- Abrupt cut-ins.
- Driving too close to the vehicle in front.
- Turning vehicles ahead.
- Narrow vehicles or objects such as motorcycles, bicycles, lamp posts, or trees.

Forward Collision Warning

Forward Collision Warning detects and warns of potential frontal collisions with other vehicles or pedestrians. The Forward Collision Warning status indicator appears on the driver display if the feature is turned off in Settings, or if the feature malfunctions.

Operating Conditions

- You're not in an off-road drive mode.
- You're traveling within the activation speed range: 7 to 112 mph (10 to 180 km/h).

Automatic Emergency Braking

Automatic Emergency Braking applies the brakes to help mitigate or prevent a collision if you don't react in time to a warning and imminent collision. The Automatic Emergency Braking status indicator appears on the driver display if the feature is turned off in Settings, or if the feature malfunctions.

Automatic Emergency Braking won't brake in any of the following conditions:

- You accelerate hard.
- You turn sharply.
- Your vehicle is not within certain operating speeds.
- The vehicle determines that there isn't a potential for frontal collision.

If Automatic Emergency Braking is currently braking the vehicle, any of the following conditions disengage the feature:

- You accelerate hard to override the Automatic Emergency Braking.
- You turn sharply.
- You apply the brake pedal hard and then release it.
- The vehicle determines that there is no longer a potential for frontal collision.

WARNING

- Automatic Emergency Braking gives priority to the driver's braking if you're able to react quicker than the feature can engage.
- The brake pedal moves downward when Automatic Emergency Braking engages. Ensure that the brake pedal isn't obstructed in any way for Automatic Emergency Braking to function.
- Automatic Emergency Braking can't prevent all collisions. Depending on the situation, the feature may not engage, or it may reduce the speed of a collision without preventing it entirely. Automatic Emergency Braking isn't a replacement for driver attention and control.

Operating Conditions

- You're not in an off-road drive mode.
- You're traveling within the activation speed range: 7 to 112 mph (10 to 180 km/h).
- You're not towing a trailer.
- Forward Collision Warning is turned on.

Dynamic Brake Support

Dynamic Brake Support provides additional braking if you don't press the brake pedal hard enough to prevent an imminent collision while Automatic Emergency Braking is active.

Operating Conditions

You're traveling within the activation speed range: 7 to 112 mph (10 to 180 km/h)

NOTES

- Dynamic Brake Support only becomes available once you enable Automatic Emergency Braking.
- To deactivate Dynamic Brake Support, release the brake pedal while the feature is active.

Parking Safety

Settings and Safety Information

Parking safety features include Park Assist Warning and Rear Cross-Traffic Warning. These features help you park your vehicle and back out of a parking spot by warning you of close objects and approaching cross traffic when you're in **R** (Reverse).

WARNING

Park Assist Warning and Rear Cross-Traffic Warning are features designed to support the driver and don't replace the driver's attention, judgment, and need to control the vehicle.

Settings

Go to **Settings** ⚙ **> Autonomy** on the center display to manage the parking safety features.

- **Park Assist Warning Audible Warnings:** Enable or disable the audible warnings for Park Assist Warning at any time during the drive cycle.

NOTE

You can't disable the Park Assist Warning visual warnings.

- **Rear Accessory Mode:** Toggle on to hide the rear visual alerts and mute audio warnings when the vehicle is in **R** (Reverse) and is connected to an accessory. Rear Accessory Mode is automatically enabled when you select **Accessory** in the Trailer Profiles menu.
- **Rear Cross-Traffic Warning:** Toggle on to hear a chime if there is a cross-traffic vehicle behind your vehicle, traveling within the activation speed range.

Driving Conditions

Park Assist Warning and Rear Cross-Traffic Warning may not work as expected in certain environments and driving situations. The features may not warn or provide a false warning under such conditions that include, but are not limited to, the following:

Low Speed

WARNING

The system will not chime when the vehicle is traveling at a speed less than 1 mph (1 km/h).

Cameras and Radars

WARNING

- Ensure that the cameras and radars are not covered with snow, mud, rain, dirt, stickers, or metallic objects.
- Ensure that the radar sensor is not out of position.
- Don't damage, replace, or modify the rear bumper.
- In freezing temperatures, clean the radars after a car wash.
- If the front cameras and radars are blocked, front and side warnings are unavailable.

Open Doors

WARNING

- The Park Assist Warning feature doesn't detect objects on the side of the vehicle when any of the cabin doors are open.
- If the tailgate is down, a trailer is attached, or if the rear sensors are blocked, the rear and side warnings are unavailable.

Tow Hitch

WARNING

Park Assist Warning doesn't sense non-electrical tow hitch attachments such as a trailer, bike rack, or cargo basket. If there are tow hitch attachments that are not connected to the electrical connector, you will receive continuous warnings if you don't enable Rear Accessory Mode.

Environmental Conditions

WARNING

Extreme temperatures and severe weather such as heavy rain, snow, or other environmental conditions can reduce visibility around the vehicle and reduce sensor performance.

Road Conditions

WARNING

- On certain uneven surfaces.
- Obstructing objects or closely parked vehicles that may block the field of view.
- Excessive noise or vibration from nearby construction equipment, such as jackhammers and heavy-duty air compressors.

Driving Conditions

WARNING

- When a fast-approaching vehicle passes.
- When there are slow moving pedestrians, pets, or objects such as shopping carts.
- Occasionally when passing guard rails, tunnels, trees, or parked cars.
- Detecting vehicles in the next lane on narrow roads.

Park Assist Warning

Park Assist Warning is a low-speed feature that assists with reverse and parking maneuvers. Ultrasonic sensors measure distances around the vehicle. When you shift to **D** (Drive), the front camera view for the automatic cameras appears on the center display when an object is detected in front of your vehicle, or as you pull into a parking spot. The feature provides a warning on the driver display and an audible warning if an object is too close to the vehicle.

Park Assist Warning can detect the following ranges around the vehicle:

- Front or rear up to 57 in (1.45 m)
- Sides up to 29 in (0.75 m)

The system displays warnings for objects detected within the sensor range as follows:

- When you shift from **P** (Park) or **N** (Neutral) to **D** (Drive), Park Assist Warning triggers only when an object is detected in the front of the vehicle at a distance of approximately 30 in (0.75 m).
- When you shift into **R** (Reverse), the driver display shows a top down view of the vehicle and warnings are provided for objects detected in the sensor range.
- Park Assist Warning provides audible warnings for objects that are detected in the vehicle path.
- When in **D** (Drive), chime warnings are only provided for objects detected in front of the vehicle and the front sides of the vehicle.
- When in **R** (Reverse), chime warnings are only provided for objects detected behind the vehicle and the rear sides of the vehicle.
- Park Assist Warning provides warnings for objects detected on the sides only when the vehicle is moving.
- When an object is first detected in the vehicle's path, the system will chime once. As the object moves closer, the frequency of the chime increases. When the object is detected at the closest distance, the system provides a continuous chime.
- Park Assist Warning will not chime when the vehicle is traveling at a speed less than 1 mph (1 km/h).
- If you open any of the cabin doors, it disables the visual and chime warnings for the sides of the vehicle.
- If you open the tailgate, it disables the visual and chime warnings for the rear and sides of the vehicle.
- If the vehicle remains stationary for approximately 10 seconds, the side warnings will go away.

WARNING

- Park Assist Warning is not a substitute for careful and attentive driving. Don't depend on Park Assist Warning alone to determine whether there is an approaching vehicle or if the area is free of people and objects. Visually check that there are no children, pedestrians, bicycles, animals, or objects present in your blind spots. Depending on Park Assist Warning alone can result in serious injury or damage to the vehicle.
- Park Assist Warning may not detect children, pedestrians, bicycles, animals, or objects that are below the bumper or are out of the range of the sensors.
- The system doesn't detect objects that are too close or too far away from the sensors.

Operating Conditions

- You're traveling at a speed of 6 mph (10 km/h) or less.
- All doors are closed.
- The tailgate is closed.
- You're not towing a trailer.
- None of the cameras and radars are blocked.

NOTES

- If Park Assist Warning is unavailable due to a malfunction, a notification appears on the left side of the driver display one time during a drive cycle.
- Park Assist Warning is disabled when you plug an accessory into the vehicle's electrical trailer connector. See Trailer Profiles and Rear Accessory Mode for information.

Rear Cross-Traffic Warning

The Rear Cross-Traffic Warning provides a visual warning on the center and driver displays, and provides an audible warning of vehicles approaching from the sides behind your vehicle. The feature activates when the vehicle is in **R** (Reverse) or rolling backward in **N** (Neutral).

The system uses rear radar sensors to detect vehicles approaching from either side when backing out of a perpendicular or angled parking space.

WARNING

- The detection range for Rear Cross-Traffic Warning may vary, depending on the approaching vehicle's speed.
- The rearview camera image may not appear on the center display when vehicle is rolling backward in **N** (Neutral).

NOTE

A notification appears on the driver display when the Rear Cross-Traffic Warning is unavailable due to a system warning or malfunction.

Operating Conditions

- You're not in an off-road drive mode or towing a trailer.
- Your vehicle is traveling in **R** (Reverse) or rolling backward at a speed between 0 to 6 mph (0 to 10 km/h).
- The approaching vehicle is within approximately 82 ft (25 m) to the left or right side of your vehicle.
- The relative speed between your vehicle and the approaching vehicle is in the range of 2 to 18 mph (4 to 30 km/h).

Light Safety

Adaptive High Beams Assist

Adaptive High Beams Assist activates high beams in low-light road conditions when the vehicle doesn't detect light from road or street lighting. Adaptive High Beams Assist partially switches off high beams based on the vehicle traffic detected by the front camera. This reduces glare for drivers of oncoming or preceding vehicles.

Adaptive High Beams Assist is enabled by default.

To disable Adaptive High Beams Assist, go to **Settings** ⚙ **> Lighting**, and turn off **Adaptive high beams assist**.

To re-enable Adaptive High Beams Assist, go to **Settings** ⚙ **> Lighting**, and turn on **Adaptive high beams assist**.

Settings and Safety Information

To enable Adaptive High Beams Assist, go to **Settings** ⚙ **> Lighting**, and turn **Adaptive high beams assist** on.

> **NOTES**
> - Ensure the windshield and camera behind the rearview mirror are clean and clear of any obstructions.
> - Adaptive High Beams Assist doesn't turn on when the vehicle travels less than 20 mph (32 km/h).

Operating Conditions

- The lights are in Auto mode.
- Adaptive High Beams Assist is turned on.
- Ride height is Standard, Low, or Lowest.
- Activation speed is 25 mph (40 km/h).
- Deactivation speed is 20 mph (32 km/h).
- The ambient light level is dark.
- The vehicle detects no streetlights.

Driving Conditions

IMPORTANT

Adaptive High Beams Assist may not work as expected in certain environments and driving situations. The feature may either partially turn off high beams in error or not partially turn off high beams as expected under such conditions that include, but are not limited to, the following:

- Environmental conditions, such as mud, dirt, snow, ice, or slush, block the front camera.
- Weather conditions, such as heavy rain or snow, reduce visibility.
- Extreme temperatures affect the vehicle.
- Fog as well as scratches, cracks, and damage to the windshield reduce visibility.
- Oncoming or preceding vehicles have damaged or broken headlights or taillights.
- Roads have sharp curves or steep grades.
- Roads have reflective road or street signs.

Charging and Range

Charging

Find a Charger

The most convenient way to charge the vehicle is with a Rivian Wall Charger installed at home (available separately). You can also use your Rivian Portable Charger, which plugs into a power outlet.

Charge the vehicle during trips with any of these options:

- **Rivian Adventure Network:** The Rivian Adventure Network provides DC fast chargers on popular routes across the USA and Canada. The network extends into more remote destinations.
- **Rivian Waypoints:** Rivian Waypoints provide AC chargers at public locations, such as shops, restaurants, hotels, and parks.
- **NACS DC fast chargers:** Model Year 2026-2027 vehicles can be charged at NACS DC fast chargers, such as Tesla Superchargers. To charge Model Year 2022-2025 vehicles at NACS DC fast chargers, use the Rivian NACS DC adapter.
- **Third-party public chargers:** You can charge the vehicle at any public charger with a J1772, CCS1, or NACS plug, provided you have the correct adapter. Public chargers may need third-party payment or may have use restrictions. Follow the instructions at the charger.

> **NOTE**
> For Model Year 2026-2027 vehicles, certain Tesla AC chargers may be incompatible with the NACS charge port. Refer to the charger documentation to confirm compatibility before attempting to charge.

Use Navigation to identify locations to charge your vehicle. When you use the Navigation app, the vehicle prepares the battery for fast charging. To manually prepare the battery for fast charging, go to **Energy** ⚡ **> Charging > Prepare for fast charging** on the center display.

Charging stations with Plug and Charge enabled allow you to start a charge session without any manual setup at the charger. Your vehicle's primary owner account will be automatically billed after a Plug and Charge session.

- Ensure a valid payment method is saved to the primary owner account before using a Plug and Charge station.
- Use the Navigation app to identify charging stops that support Plug and Charge.
- Charge session receipts can be found in the mobile app.

Purchases and payments for charging are subject to Rivian's Charging Terms and Conditions located at https://www.rivian.com/legal.

Start a Charge Session

CCS1 Charge Port (Model Year 2025 and Earlier)

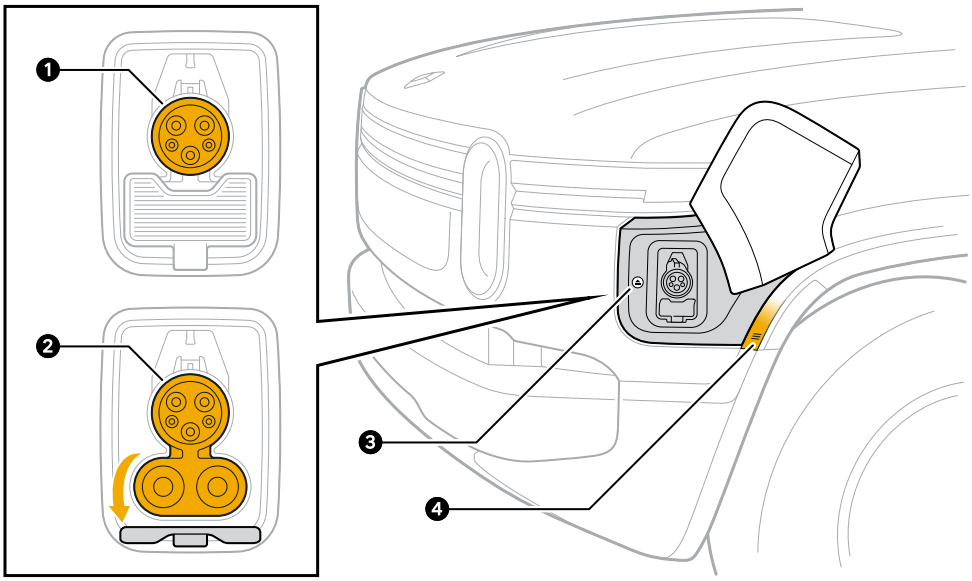

Item	Description
1	J1772 charge port (AC charging)
2	CCS1 charge port (DC fast charging)
3	Stop charge button
4	Charge port door sensor

DANGER

Ensure that the charge port and the charge plug don't contain any foreign debris before you start a charge session. Failure to do so can result in property damage, serious injury, or death. Foreign debris may cause a charging error or overheating. In rare circumstances, extreme overheating can cause a fire. If you find foreign debris, contact Rivian.

CAUTION

- When charging your vehicle, use a charger that matches the plug type of the vehicle. Use an adapter only as necessary, when a compatible charger is not available.
- Adapters are not meant for daily use. Using an adapter to regularly charge the vehicle may cause damage to the adapter and to the vehicle.
- Only Rivian-provided NACS DC adapters are authorized for use on the Tesla Supercharger network; use of third-party or incorrect adapters can result in vehicle or property damage.
- Don't use a third-party NACS AC adapter to charge the vehicle at a DC fast charger. Charging with incompatible equipment can result in vehicle or property damage.
- Don't use an extension cord or cable at a DC fast charger, such as a Tesla Supercharger. Using an extension cord can result in vehicle or property damage.
- Using a non-J1772 AC charger with an adapter can cause overheating that affects the vehicle's AC charging performance.
- Any damage caused by the use of unauthorized or incompatible charging equipment is not covered by the New Vehicle Limited Warranty.

Start a charge session as follows:

1. Park at the charger and put the vehicle in **P** (Park).
2. Open the charge port door with one of the following methods:
   - Go to **Energy** ⏻ **> Charging > Open charge port** on the center display.
   - Touch the charge port door sensor.
   - Choose **Open charge port door** in the Apple Watch app (if installed and enabled).
3. Get the charge cable.
   - If using a public charger, follow any third-party instructions to release the charge cable and start charging.
   - If using your Portable Charger, plug it into a power outlet before you insert the plug into the vehicle.
   - If using a DC fast charger, pull down the vehicle's DC charge port cover before you insert the plug into the vehicle.
   - If using a NACS DC fast charger, connect the NACS DC adapter to the plug before you insert the plug into the vehicle.
4. Align the charge plug to the vehicle's charge port. Fully insert the plug into the port. The vehicle starts to charge automatically.

NOTE

A notification appears on the center display, driver display, and mobile app if the charge session is disrupted or charging is slowed.

NACS Charge Port (Model Year 2026 and Later)

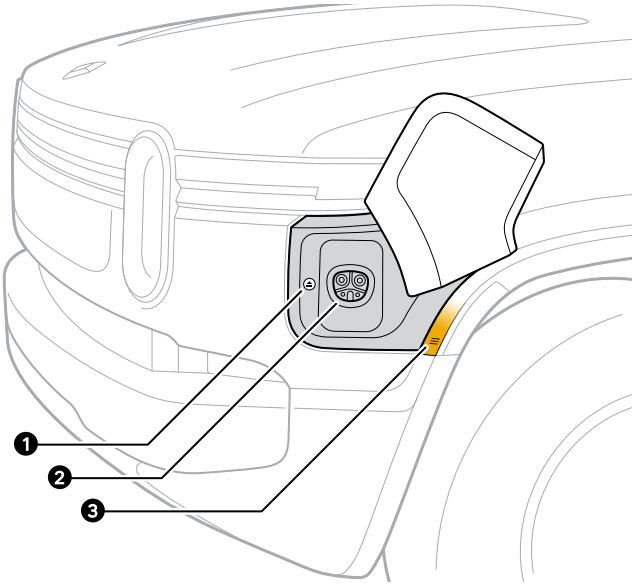

Item	Description
1	Stop charge button
2	NACS charge port
3	Charge port door sensor

DANGER

Ensure that the charge port and the charge plug don't contain any foreign debris before you start a charge session. Failure to do so can result in property damage, serious injury, or death. Foreign debris may cause a charging error or overheating. In rare circumstances, extreme overheating can cause a fire. If you find foreign debris, contact Rivian.

CAUTION

- When charging your vehicle, use a charger that matches the plug type of the vehicle. Use an adapter only as necessary, when a compatible charger is not available.
- Adapters are not meant for daily use. Using an adapter to regularly charge the vehicle may cause damage to the adapter and to the vehicle.
- Don't use an extension cord or cable at a DC fast charger, such as a Tesla Supercharger. Using an extension cord can result in vehicle or property damage.
- Any damage caused by the use of unauthorized or incompatible charging equipment is not covered by the New Vehicle Limited Warranty.

Start a charge session as follows:

1. Park at the charger and put the vehicle in **P** (Park).
2. Open the charge port door with one of the following methods:
   - Go to **Energy** ⏻ **> Charging > Open charge port** on the center display.
   - Touch the charge port door sensor.
   - Choose **Open charge port door** in the Apple Watch app (if installed and enabled).

3. Get the charge cable.
   - If using your Portable Charger, plug it into a power outlet before you insert the plug into the vehicle.
   - If using a public J1772 AC charger, follow any third-party instructions to release the charge cable. Connect the J1772 adapter to the plug before you insert the plug into the vehicle.

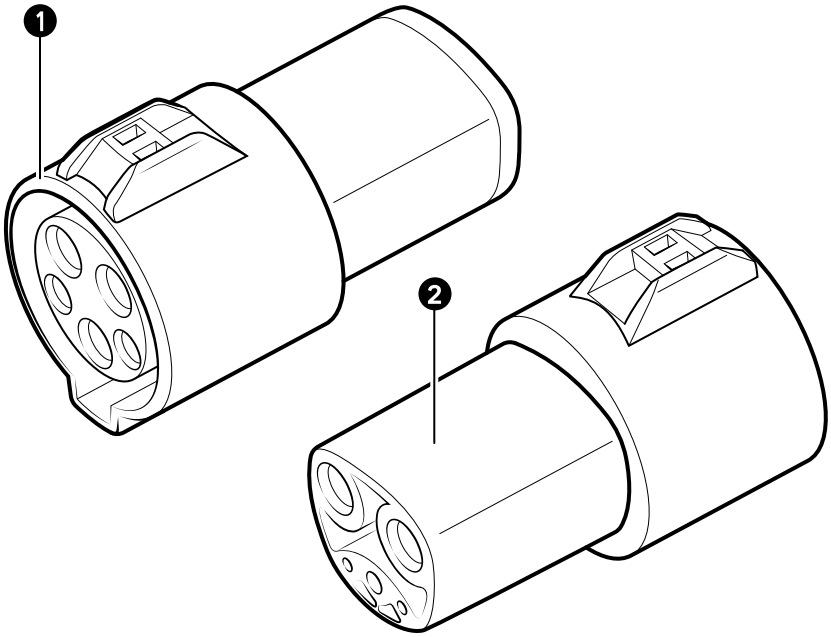

Item	Description
1	J1772 AC inlet (connects to J1772 AC charge cable plug)
2	NACS outlet (inserts into vehicle charge port)

- If using a CCS1 DC fast charger, connect the Combo CCS1 DC adapter to the plug before you insert the plug into the vehicle.

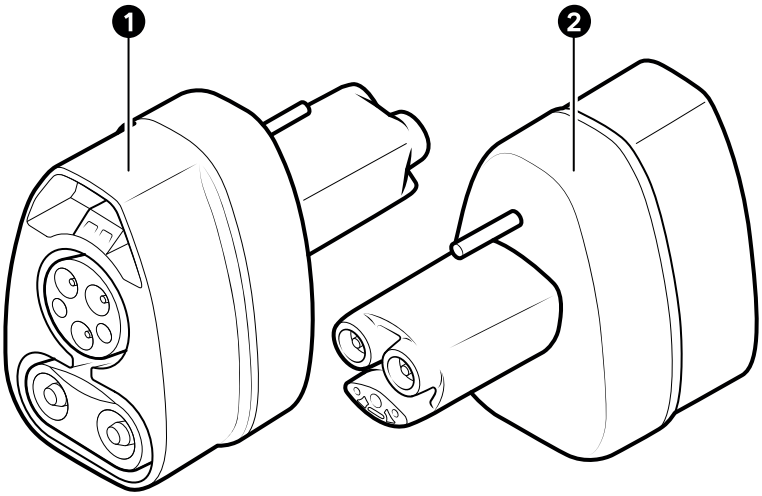

Item	Description
1	Combo CCS1 DC inlet (connects to CCS1 charge cable plug)
2	NACS outlet (inserts into vehicle charge port)

4. Align the charge plug to the vehicle's charge port. Fully insert the plug into the port. The vehicle starts to charge automatically.

> **NOTE**
> A notification appears on the center display, driver display, and mobile app if the charge session is disrupted or charging is slowed.

Set the Charge Amperage

To reduce the level of current that the vehicle draws while charging, change the amperage setting.

1. Go to **Energy** ⚡ **> Charging** and tap **Amps**.
2. Select the appropriate amps value.

NOTES

- If you set the charge amperage when you set a charge schedule, the vehicle saves the setting for future scheduled charge sessions (an active charge schedule isn't required to change the charge amperage).
- If you set the charge amperage before an unscheduled charge session, the setting will apply when you start the charge session.
- If you set the charge amperage during an active charge session, the setting will apply for the rest of the active session.
- When the vehicle completes its charge session, the amperage setting resets to the maximum value if you haven't set a charge schedule or you're away from the saved location.

Set the Charge Limit

You can set the charge limit to optimize range, charge time, and battery health depending on your driving needs. Follow any charge limit guidelines in the center display, the mobile app, or the Apple Watch app (if installed and enabled).

1. Go to **Energy** ⏻ **> Charging > Level**.
2. Tap and slide the charge limit bar to set a custom charge limit between 50% and 100%.

NOTES

- Charging speed slows when the battery is almost fully charged.
- Regenerative braking may be reduced temporarily when the vehicle battery is fully charged or almost fully charged.
- For Model Year 2025 and 2026 Dual Standard vehicles, charge to 100% at least once every two weeks or every 500 mi (800 km) to ensure optimal range estimation, charging speed, and regenerative braking. If it has been too long since you fully charged the battery, a notification will appear and the charge limit will be automatically set to 100%.

Check Charge Status

The light color around the stop charge button indicates the charge status.

Light Color	Charge Status
White (solid)	Ready
White (pulsing)	Starting to charge
Green (pulsing)	Charging
Green (solid)	Charge complete
Blue (solid)	Charge scheduled
Red (solid)	Not working

IMPORTANT
If the light is red, unplug the charger and plug it in again. Refer to the charger instructions for additional details and contact Rivian if it still doesn't work.

The light bars at the front and rear of the vehicle indicate the charging status.

- When the vehicle is charging, the light bars pulse green one segment at a time. The segments that stay green indicate the charging level.
- When the vehicle is at full charge, the light bars stay green.
- When the vehicle is locked, the light bars turn off.

The battery icon indicates the charging status:

- Lightning bolt indicates charging is in progress.
- Green battery icon indicates charging is complete.

To view charging information, go to **Energy** ⚡ **> Charging** on the center display, the mobile app, or the Apple Watch app (if installed and enabled).

Check Charge Session Data

To view charging information, go to **Energy** ⏻ **> Charging > Graph** on the center display or the mobile app.

While the vehicle is charging, you can view the estimated range and detailed charge session data on the vehicle displays or in the mobile app.

Charge session data includes the following:

- End time or time left to charge
- Energy added (mi, km, or kWh)
- Charge rate (mi/hr, km/hr, or kW)
- Charging cost, if applicable

> **NOTE**
> Time to charge varies depending on the following:
>
> - Power voltage
> - Current
> - Air temperature outside the vehicle
> - Battery temperature and preconditioning

Stop a Charge Session

IMPORTANT

- When you use a DC fast charger, stop charging before you remove the charge plug from the vehicle's charge port.
- When using a charging adapter, stop charging before you remove the charge plug with the adapter from the vehicle's charge port.
- When you use the Rivian Portable Charger, Rivian Wall Charger, Rivian Waypoints, or a public AC charger, the charge plug is locked while the vehicle is charging. The charge plug unlocks when charging stops if the vehicle is unlocked. Unlock the vehicle before you remove the charge plug if the vehicle is locked or charging is not complete.

Stop a charge session as follows:

1. Unlock the vehicle.
2. Press the stop charge button or choose **Energy** ⚡ **> Stop charging** on the center display, the mobile app, or the Apple Watch app (if installed and enabled).
3. Press the button on the plug handle. Pause briefly, and then pull on the handle to remove the charge cable.

NOTES

- **For Model Year 2022-2025 vehicles:** If you're using the NACS DC adapter, press the button on the top of the adapter to release the latch, and remove the charge plug with the adapter from the vehicle. Then, press down on the tab below the NACS adapter port and pull the charge plug out of the adapter.
- **For Model Year 2026-2027 vehicles:** If you're using the J1772 adapter or the Combo CCS1 DC adapter, remove the charge plug with the adapter from the vehicle's charge port. Then, press the button on top of the charge plug and remove the adapter from the plug.

4. If you're charging a Model Year 2022-2025 vehicle with a DC fast charger, push the DC charge port cover up before closing the charge port door.

> **NOTE**
> Always ensure the DC charge port cover on a Model Year 2022-2025 vehicle is closed after charging and before turning on Car Wash Mode.

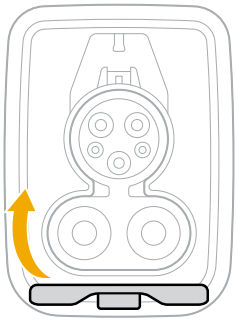

5. Return the charge cable to its storage location.

> **NOTE**
> Store the charge cable neatly to prevent a tripping hazard. Keep the cable loosely coiled and avoid sharp bends.

Set a Charge Schedule

A charge schedule helps you benefit from off-peak electricity rates or to stagger charging times between multiple vehicles.

Set a Custom Charge Schedule

A custom charge schedule allows you to choose your preferred charging hours.

1. If you're using the center display, park at your charging location. This location will be automatically saved to the schedule.
2. Go to **Energy** ⚡ **> Charging > Schedule** on the center display or **Energy** ⚡ **> Schedule** on the mobile app.
3. Toggle charge scheduling on.
4. Select the **Custom** tab.
5. Select **Edit schedule**.
6. Choose **Daily** or **Weekdays**.
7. Set the times to start and stop charging.
8. If you're using the mobile app, you can select your charging location from the map.
9. Save the custom charge schedule. You can edit the schedule on the center display or the mobile app.

> **NOTES**
>
> - The custom charge schedule will only be active at the saved location.
> - Editing a custom charge schedule outside of the saved location will replace the saved location.

Set an Off-Peak Charge Schedule

An off-peak charge schedule prioritizes charging when energy demand is lower, often resulting in lower electricity rates.

1. Go to **Energy** on the mobile app.
2. Select **Get Started** under "Charge off-peak and save" and follow the setup guidance. Ensure you have the following information ready:
   - Your charging location. The off-peak charge schedule will only be active at the saved location.
   - The name of your utility provider (if the charge location is supported by multiple providers).
3. Review the recommended off-peak charge schedule and utility plan.
4. Save the recommended schedule, or explore schedules for other utility plans (if available).

> **NOTE**
> To experience the full benefits, ensure you're enrolled in the recommended utility plan. Contact your utility provider directly if you need to change your plan.

5. To view the off-peak charge schedule on the vehicle center display, go to **Energy > Charging > Schedule** and select the **Off-Peak** tab.

> **NOTES**
> - Only one charge schedule can be active at a time.
> - If you set up a custom schedule and an off-peak schedule, both schedules should have the same saved location.
> - The active charge schedule pauses when you're away from the saved location.
> - You can charge immediately at the saved location with one of the following methods:
> - Connect your vehicle to a charger and select **Charge Now** on the center display.
> - Turn off the active charge schedule.
> - If you set the charge amperage when you set a charge schedule, the vehicle saves the setting for future scheduled charge sessions.

Range

Range Estimates

Range is an estimated value measured in either the distance the vehicle can travel before it needs to charge or the percentage of battery charge remaining.

The range estimate in the driver display is calculated based on your vehicle configuration and your driving history in each drive mode.

For Model Year 2025 and 2026 Dual Standard vehicles, charge to 100% at least once every two weeks or every 500 mi (800 km) to ensure optimal range estimation, charging speed, and regenerative braking. If it has been too long since you fully charged the battery, a notification will appear and the charge limit will be automatically set to 100%.

Compare range estimates as follows:

1. Go to **Energy** ⚡ **> Charging** on the center display.
2. Choose **Range based on** under **Energy**.

> **NOTE**
> You can also choose **Reset History** to clear your driving history and restore default data.

Use the Energy monitor to review your driving efficiency and energy usage.

1. Go to **Energy** ⚡ on the center display or the mobile app.
2. Choose **Energy monitor**.

View your efficiency in the driver display as follows:

1. Long-press the left or right thumb control buttons on the left side of the steering wheel.
2. Cycle through the tire pressure values and navigation map until you see the efficiency graph.

Set the units to show range in the driver display as distance, percentage, or both:

1. Go to **Settings** ⚙ **> Units**.
2. Under **Range in driver display**, choose **mi**, **%**, or **Both**.

Energy Monitor

Use the Energy monitor to review your driving efficiency and energy usage.

- **Projected range impact:** Provides the vehicle's expected range loss during driving over a one-hour period and parked over a 24-hour period. You can view the impact in distance or energy. Follow the tips to reduce your range impact.
- **Energy use:** Displays a graph of the energy used during the current drive, last hour, or last 15 minutes. Drive includes propulsion which will likely account for most of the energy use while driving. Parked displays the energy use from remaining systems and excluding propulsion.
- **Session details:** Provides a breakdown of energy usage by propulsion, climate, outlets, and electronics.

To view the Energy monitor, go to **Energy** ⚡ **> Energy monitor** on the center display or the mobile app.

Effects on Range

To extend range, do the following:

- Inflate tires to the recommended pressure. (See Tire Pressure and Tire Care.)
- Use regenerative braking instead of the brake pedal to slow the vehicle.
- Choose **Conserve** mode for longer distances, if equipped. (See On-Road Drive Modes.)
- Choose **Lowest** ride height at higher speeds, if equipped, and **Low** ride height at lower speeds for increased range and efficiency. (See Ride Height.)
- Keep the windows closed.

Be aware of the following factors that may reduce range:

- Excessive speed
- Aggressive acceleration
- Extreme temperatures
- Steep hill climbs
- High wind conditions
- Towing and cargo (see Trailer Settings)
- Off-road drives and off-road drive modes (see Off-Road Drive Modes)
- Driving habits
- Road quality
- Heating and cooling the cabin
- Charging accessories (such as phones or laptops) and other loads plugged into the outlets

Cold Weather

Driving or parking in cold weather can temporarily reduce your vehicle's range. When you charge the vehicle or prepare it for DC fast charging, the battery warms up and regains the available range. Sometimes range is also restored when you drive the vehicle.

You'll be notified on the driver display, center display, and in the mobile app when your vehicle is parked in conditions that make it more susceptible to range loss and when range has decreased due to the battery becoming cold.

Go to **Energy** ⏻ **> Charging** on the center display to see the cold weather range impact. On the energy bar, the amount of temporarily unavailable range will be displayed in blue. The notification bar will state the amount of range reduction in miles.

To prevent range loss or recover range, do the following:

- Charge your vehicle to warm the battery.
- Plug in and set up a climate schedule to prime the battery for your next drive.

For more advice on managing your vehicle's energy in cold weather, go to https://rivian.com/support/article/r1-winter-driving-tips.

Low Battery

When the vehicle battery is low, charge as soon as you can. The vehicle gradually reduces its power consumption when the vehicle battery is very low.

Battery Status	Recommendation	Effect on Vehicle
Battery low	Find a charger. Choose **Conserve** mode (if equipped).	Battery icon turns yellow.
Battery very low	Find a charger. Choose **Conserve** mode (if equipped).	• AC outlets are disabled (unless the **Auto** option is enabled). • On-demand battery conditioning is disabled.
Battery almost empty	Charge the vehicle.	Battery conditioning stops.
Battery empty	Bring the vehicle to a safe stop if a charger is not in range and contact Rivian.	Propulsion system begins to shut down. Accessory power features (such as climate control, phone charging, and outlets) are only available for a short time before the vehicle shuts down completely.

CAUTION

- If your battery is almost empty, charge the vehicle immediately.
- If you leave the vehicle unplugged for an extended time, it may require a jump start or replacement of the 12 V battery.
- If you leave the vehicle unplugged for an extended time, it may damage the vehicle battery permanently.
- If you can't charge the vehicle, contact Rivian.

DANGER

Never attempt to open or tamper with the vehicle battery. Contact Rivian for battery service.

Battery Life

To maximize battery life beyond the vehicle warranty, do the following:

- Avoid completely draining the battery.
- Accelerate moderately. Drive at a steady speed.
- Use your Rivian Wall Charger or a Rivian Waypoints Charger whenever possible.
- For long-term parking, keep the vehicle in a garage or shaded location whenever possible. Extreme heat and cold accelerate battery aging.
- Avoid leaving the vehicle parked for a long time at a very low state of charge.
- Leave the vehicle plugged in if you don't plan to drive for a long time. When parked, the vehicle uses some energy to maintain battery health. The vehicle maintains the 12 V battery system using a small amount of energy from the high-voltage battery.

The vehicle battery may lose some capacity over its lifetime. See your vehicle warranty for details.

Storage and Security

Interior Storage

Center Console

The center console is located between the driver and passenger seats. It serves as a storage compartment for small belongings. You can charge your devices on the wireless charger included on the center console. There are also several power outlets available in and around the center console.

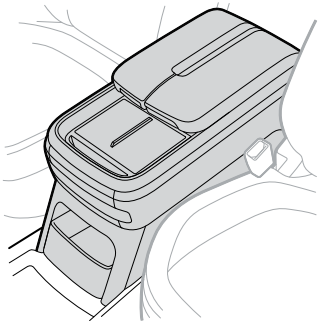

> **NOTE**
> Depending on your vehicle's trim, the center console may vary in design.

Cup Holder

Press the metal trim on the forward edge of the center console to pop out the cup holder for use.

Storage Bin

Press either of the buttons at the front and center of the console to access the storage bin. Fold the open doors back into place and push down to close the storage bin.

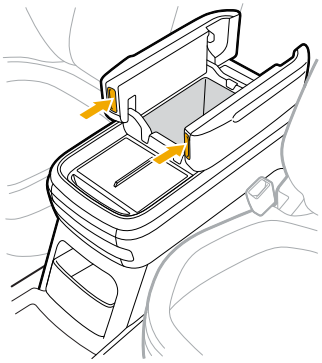

Storage Drawer

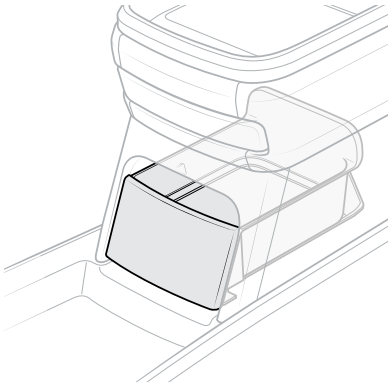

If your vehicle is configured with a storage drawer, locate it in the Accessory Dock of the center console. The drawer is spring-loaded and can be used as a place to store your belongings.

If your vehicle is configured with a Camp Speaker, see the Camp Speaker Guide for usage instructions.

CAUTION

Only store items in the drawer of the Accessory Dock and not in the cavity of the dock.

Uninstall the Storage Drawer

If you swap out the storage drawer for a Camp Speaker, you must uninstall the drawer so that it will be released from its dock.

1. On the center display, go to **Settings** ⚙ **> Dock** and unlock the storage drawer to release it.
2. Pull the storage drawer straight out to remove it.

Rear Seat Armrest

When the middle seat in the second row is not occupied, you can pull down the rear seat armrest. The rear seat armrest contains two cup holders. Remove the cup holder liner to clean it.

When the armrest is down, you can access the Gear Tunnel from inside the vehicle cabin by sliding up the door behind the armrest.

> **NOTE**
>
> Since contents in the Gear Tunnel may shift when the vehicle is in motion, open the Gear Tunnel door only while the vehicle is parked.

Press the button behind the cup holders to access a small storage bin on the rear seat armrest. Push the lid back in place to close the bin.

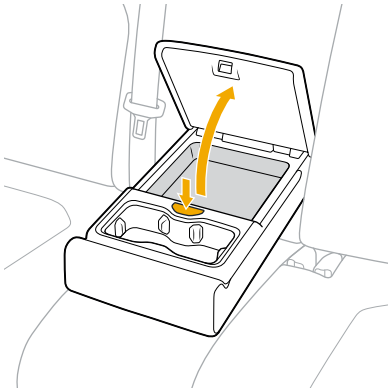

Door Pockets

Front and rear doors contain hinged storage pockets to hold your belongings. Pull the pocket away from the door to expand it and store larger items. The front door pockets can hold a larger one-liter water bottle.

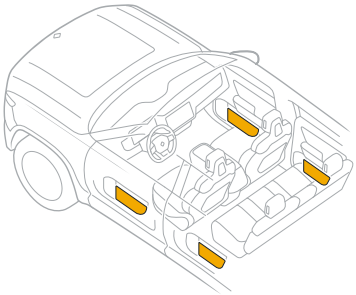

NOTE

Don't put bulky items in the door pockets that could prevent the door from closing, or that could touch the side of the seat when you close the door. Securely seal all liquid bottles or containers before you place them in door pockets to prevent spills.

Seat Back Pockets

The vehicle's front seats provide seat back pockets that expand to hold your belongings.

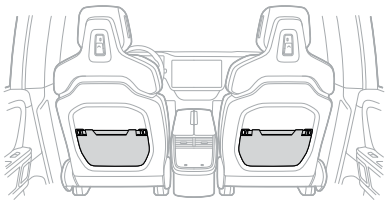

> **NOTE**
> Don't store bulky items that may hinder the movements of passengers in the back row or the proper installation of child seats.

Under-Seat Storage

Front Row

A storage drawer is located under the driver seat. If your vehicle includes a storage drawer for the front passenger, it is located under the front passenger seat. To access the storage drawer, pull the latch. To close it, push the drawer back in.

> **NOTE**
> The maximum weight capacity of the under-seat storage drawer is approximately 0.5 lb (230 g).

Back Row

A storage bin is located under the seats in the back row. Store objects such as reusable grocery bags and flat, lightweight sports equipment.

To access the bin, grab the plastic trim near the back cushion and flip up the seats.

Push the seat firmly back into place to secure it before seating passengers or driving the vehicle.

> **NOTE**
> The size of the back row storage bins may vary, depending on your vehicle's trim.

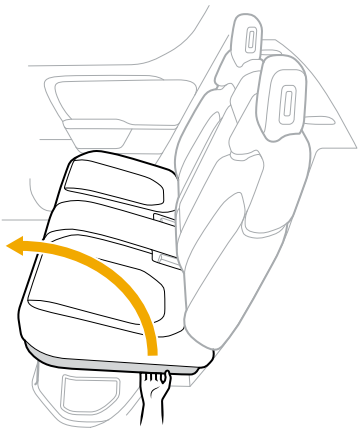

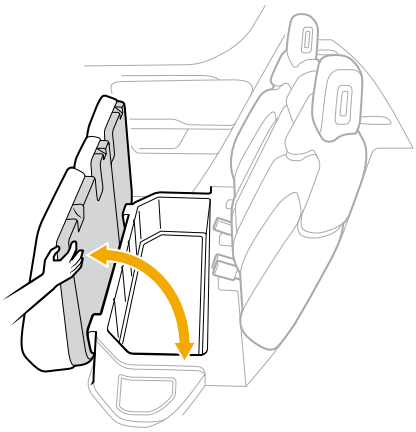

> **CAUTION**
> Don't store bulky or heavy items that may damage the storage bin if they roll or move around significantly while the vehicle is in motion. Stored items should fit inside the bin and allow the bin to close securely.

Exterior Storage

Protect Your Gear

Secure your gear and protect it from the elements in the storage locations listed below.

Storage Location	Lockable?	Waterproof?
Front trunk	Yes	Yes
Spare tire compartment	Yes	No
Gear Tunnel	Yes	Yes
Tonneau cover	Yes	No

Front Trunk

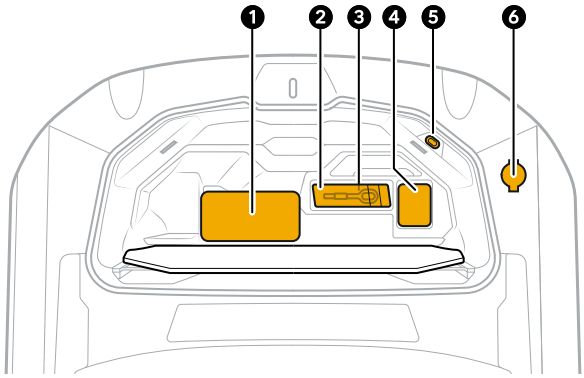

Item	Description
1	Portable Charger
2	Accessory kit bag (optional)
3	Tow eye
4	First aid kit
5	Entrapment button
6	Windshield washer fluid

Use the Front Trunk

WARNING

Be sure that no people or objects are in the path of the hood while it is opening or closing, to reduce the risk of pinching or other injury, or damage to the vehicle.

Open or close the hood to access the front trunk using one of the following:

- Key fob
- Button on the front fascia
- Center display
- Entrapment button inside the front trunk

Open or Close the Front Trunk with the Key Fob

Press the front trunk button on the key fob twice to open or close the hood.

> **NOTE**
> To pause the hood while it opens or closes, press the front trunk button once. To reverse the door, press the front trunk button twice again.

Open or Close the Hood with the Front Trunk Button

Follow these steps to use the front trunk button to open the hood:

1. Unlock the vehicle.
2. Press the button on the front fascia once.

> **IMPORTANT**
> Before you drive the vehicle, close the hood completely so that it is flush with the vehicle. If you drive the vehicle with the hood open, the vehicle significantly limits the maximum speed for safety reasons.

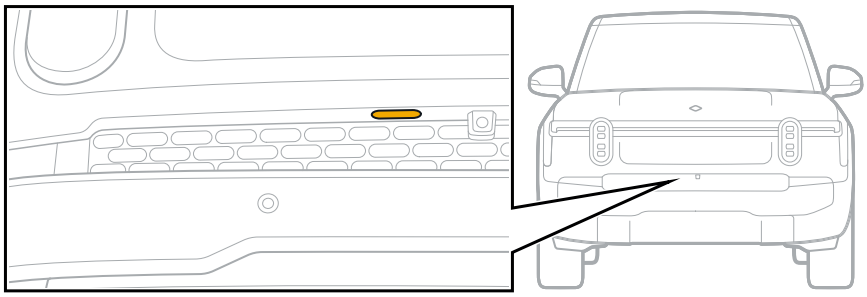

Use the Front Trunk Entrapment Button

IMPORTANT

Don't go into the front trunk. It isn't intended to hold people.

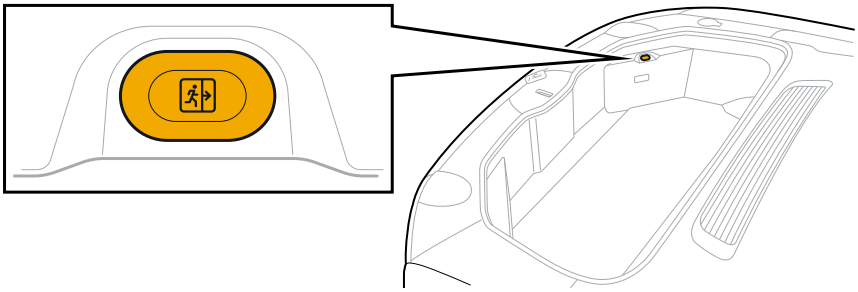

The entrapment button inside the front trunk glows in the dark for visibility. If someone is trapped inside the hood, that person can press the entrapment button to open the front trunk. The entrapment button won't work if the batteries are dead. Refer to instructions on how to open the hood manually for details.

IMPORTANT

The entrapment button partially releases the hood door if the vehicle is driving faster than 3 mph (5 km/h) to allow air into the front trunk. If someone presses the entrapment button, a notification appears on the driver display. Prepare to park the vehicle immediately. After you park the vehicle, open the hood.

Spare Tire Compartment

To access the spare tire compartment for additional storage in the truck bed:

1. Ensure that the truck bed is empty, and that there aren't any objects on the spare tire compartment lid.

> **NOTE**
> Unlock and remove the rear Cargo Crossbar if needed.

2. Open the tailgate.
3. Lift the release lever to open the spare tire compartment lid.
4. Push the spare tire compartment lid to a vertical position to open it fully.

> **NOTE**
> If you purchased a spare tire, see Change a Tire for detailed spare tire removal and installation instructions.

> **WARNING**
> To avoid risk of contamination, do not use the spare tire compartment to store consumable items including personal care products, food, and bottled water.

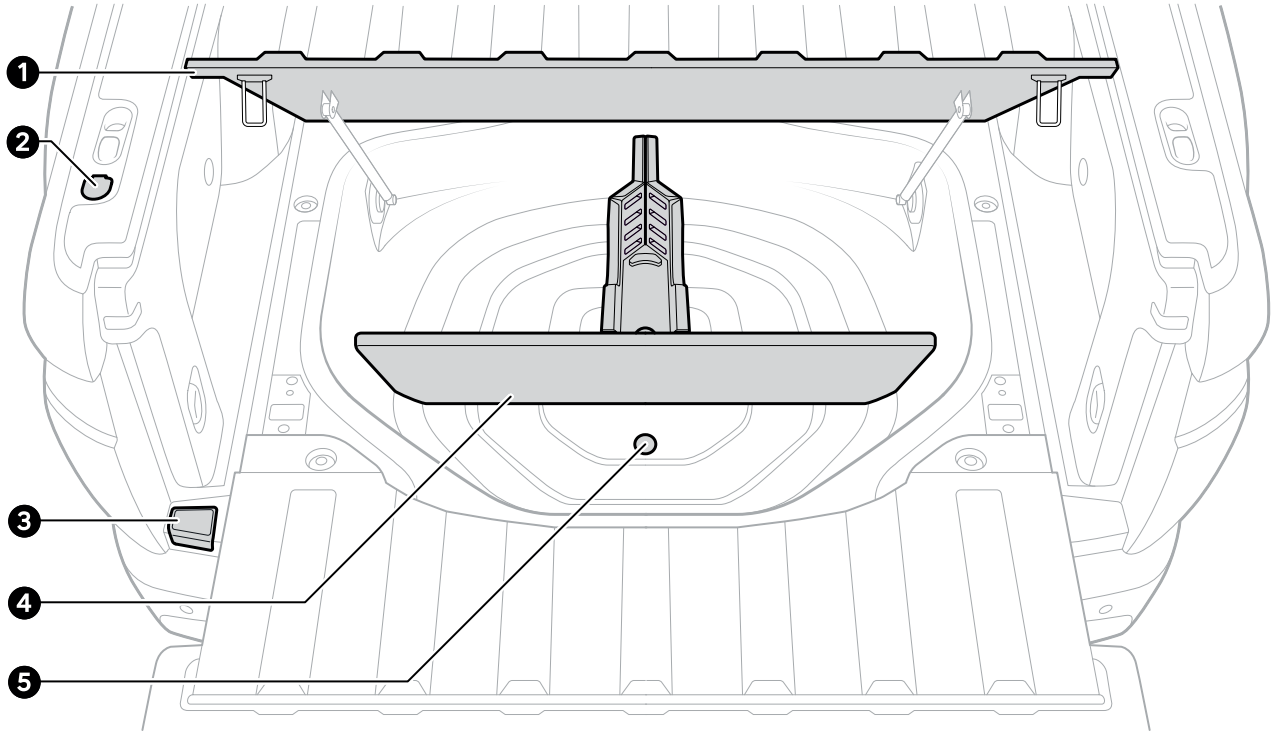

Item	Description
1	Spare tire compartment lid
2	Tailgate release button
3	Spare tire compartment release lever
4	Storage divider
5	Drain plug

Tailgate

The tailgate folds down flat and locks or unlocks simultaneously when you lock or unlock the vehicle.

Use the Tailgate

Open the tailgate with one of the following:

- Key fob
- Button on the exterior bed rail
- Center display
- Rivian app
- Entrapment button inside the truck bed

> **NOTE**
> The only way to close the tailgate is to manually close it.

> **CAUTION**
> - Don't exceed the weight limit of 1000 lbs (453 kg) on the open tailgate.
> - Remove any items from the tailgate before closing. Items can slip underneath the tailgate gap cover.

Open the Tailgate with the Key Fob

Press the tailgate button on the key fob twice to unlatch the tailgate.

Open the Tailgate with the Tailgate Button

Press the tailgate button on the exterior bed rail to open the tailgate. The tailgate unlatches and slowly opens.

> **NOTE**
> Since the tailgate uses gravity to open, it won't open if the car points downhill. In this case, you'll need to open the tailgate manually after you press the button.

If you have a power tonneau cover, use this button.

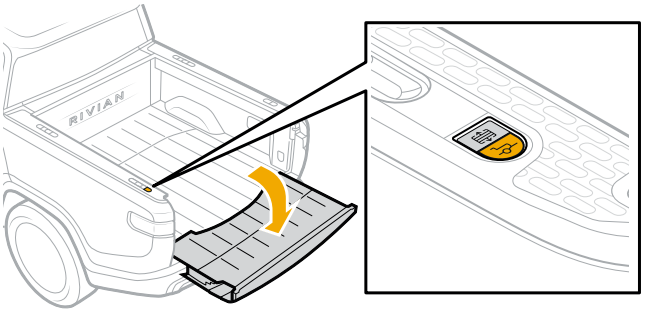

If you don't have a power tonneau cover, use this button.

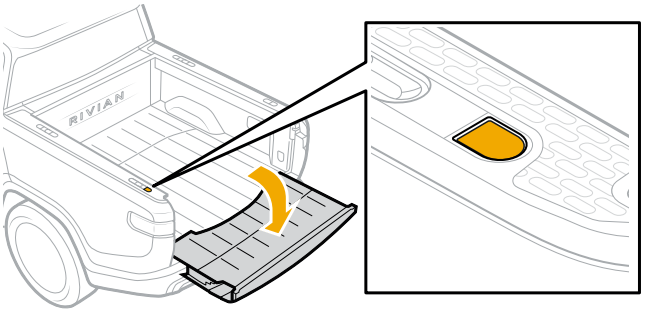

Open the Tailgate with the Center Display

To open the tailgate with the center display, do the following:

1. Go to **Access and Security** on the center display.
2. Choose the tailgate button.

Open the Tailgate with the Rivian app

To open the tailgate with the Rivian app, do the following:

1. Press the tailgate button on the app.
2. Choose **Confirm**.

Open the Tailgate with the Entrapment Button

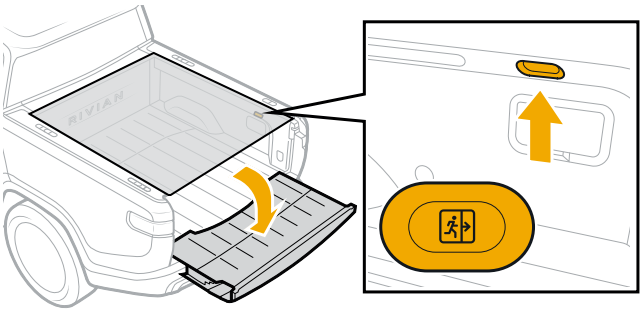

The entrapment button in the truck bed glows in the dark for visibility. If the vehicle is parked and someone is trapped inside the truck bed, they can press the entrapment button to open the tailgate.

IMPORTANT

The entrapment button won't release the tailgate if the vehicle is in Drive, Neutral, or Reverse. If someone presses an entrapment button, a notification appears on the driver display. Prepare to park the vehicle immediately. After you park the vehicle, open the tailgate.

Truck Bed

CAUTION

The truck bed won't remain dry if you drive in water that's higher than the truck bed floor. If you plan to drive your Rivian R1T in deep water or snow without a tonneau cover, ensure that the equipment in your truck bed can withstand contact with water.

Cargo Storage

There are four integrated cargo tie-downs in the truck bed. The vehicle has accessory ports on the truck bed rails and on its roof.

CAUTION

- Carefully handle all cargo to avoid breaking or damaging the glass roof panels. Avoid securing items to the roof accessory ports.
- Objects secured to the vehicle may shift as you drive. Secure your cargo to avoid damage or loss of objects.

Accessory Ports

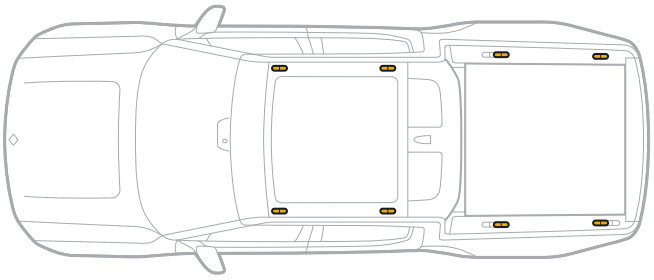

The accessory ports allow you to install the optional Cargo Crossbars. The crossbars are compatible with other optional accessories such as bike mounts, rooftop tents, and kayak mounts. The accessory ports can also be used as tie-down points for cargo.

Cargo Tie-Downs

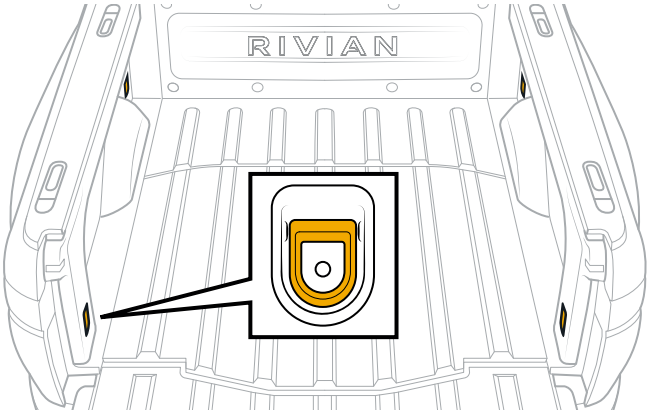

The integrated cargo tie-downs are located in the corners of the truck bed walls. Use the cargo tie-downs to prevent cargo from moving and sliding. Secure cargo to both sides and distribute weight evenly across the bed.

Gear Tunnel Storage

The Gear Tunnel storage offers a compartment for holding equipment or other items.

Open the Gear Tunnel Storage

Park the vehicle before you access the Gear Tunnel storage.

IMPORTANT

- Objects stored in the Gear Tunnel storage may shift while you drive. Use care when you open the Gear Tunnel storage.
- Don't go into the Gear Tunnel storage; it isn't intended to hold people.
- Don't drive with your pets in the Gear Tunnel storage; it isn't intended to hold pets.

1. Use one of the following options to open the Gear Tunnel storage:
   - Buttons on the rails of the truck bed
   - Center display
   - Rivian mobile app
   - Entrapment buttons inside the Gear Tunnel storage
2. Lower the Gear Tunnel door until it opens completely.

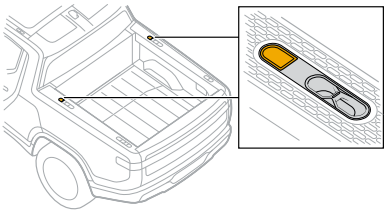

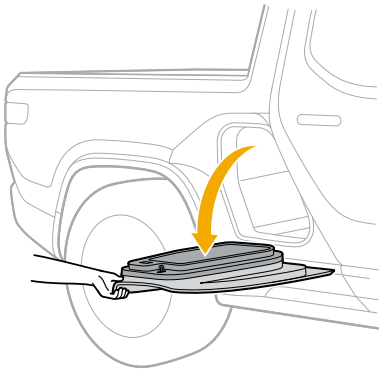

Lights turn on inside the Gear Tunnel storage when you open a Gear Tunnel door.

NOTE

You can access the Gear Tunnel storage from inside the vehicle cabin when the rear seat armrest is down. However, we recommend that you only access the Gear Tunnel storage when the vehicle is parked.

Use the Gear Tunnel Doors

Each Gear Tunnel door offers a compartment that you can use for optional storage.

To open the compartment in the Gear Tunnel door, slide the tab to release the compartment cover.

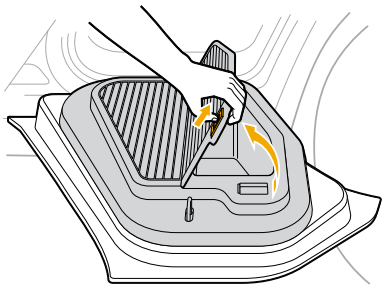

Use the Gear Tunnel doors for support when you load or unload items, or as a place to sit or stand on.

WARNING

The maximum static load capacity is 250 lbs (110 kg) for each Gear Tunnel door. Jumping on the Gear Tunnel door may damage the door.

Close the Gear Tunnel Storage

To close a Gear Tunnel door, lift it until it latches.

IMPORTANT

Close the Gear Tunnel doors so that they are flush with the vehicle before you drive. The vehicle significantly limits the maximum speed for safety reasons if you drive the vehicle with a Gear Tunnel door open.

Power Devices

The Gear Tunnel storage offers the following options to power external devices:

- One 120 V power outlet
- One 12 V power outlet

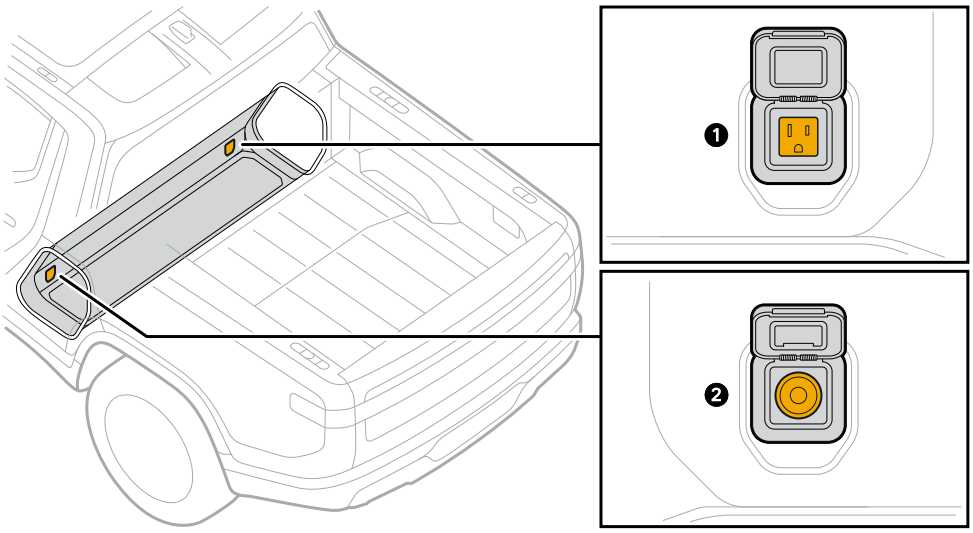

Item	Outlet	Power State
1	120 V	Power is off by default. After you turn the 120 V outlets on from the **Energy** app on the center display, they all remain on. **NOTE** Turn off 120 V outlets when they aren't in use. If you leave the 120 V outlets turned on, they remain active and can reduce the range of your vehicle even if you lock and leave the vehicle.
2	12 V	Power is always on when the vehicle is awake.

To send power to the 120 V, 12 V, and USB-C outlets, as well as the wireless charging pad, choose the **Energy** app from the center display, and turn on **Outlets**.

To turn off the outlets after a period of time, set the timer by choosing the time increment. The outlets automatically turn off when the timer ends or the battery range is very low.

> **NOTE**
> The 12 V and USB-C outlets as well as the wireless charging pad are always on when the vehicle is awake. Turn on **Outlets** to keep the power on when you're away from the vehicle.

Provide Power to a 120 V Device

To use the 120 V outlet, follow these instructions:

1. Ensure that 120 V outlets are turned on in the vehicle.
2. Flip up the cover of the 120 V outlet.
3. Insert the power plug into the 120 V outlet.

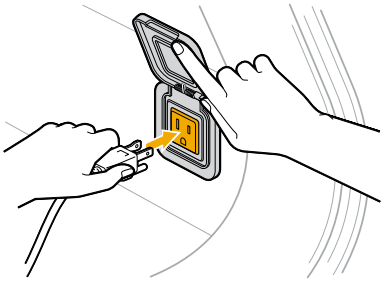

Before you close the Gear Tunnel doors, follow these instructions:

1. Unplug the device from the 120 V outlet.
2. Flip down the cover on the outlet.
3. Turn off 120 V outlets in the vehicle.

DANGER

Rivian-supplied accessories work best with your vehicle. To reduce risk of fire or a thermal event, use caution when leaving non-Rivian devices plugged in and unattended in the Gear Tunnel.

- Don't let objects obstruct any outlets being used.
- If you use a powered device not supplied by Rivian, turn off and unplug the 120 V outlet before you close the Gear Tunnel doors.
- Objects in the Gear Tunnel may shift as you drive. Use caution when opening the Gear Tunnel doors.

CAUTION

- Don't use an outlet to power any device that requires over 1,500 W (1.5 kW) of power. If the 120 V circuits overload, the power cuts off. Unplug devices before you turn the outlets back on.
- Don't use more than one high-powered device at the same time. The 120 V outlets share the 1,500 W (1.5 kW) of power.
- Leaving the 120 V outlets powered on reduces the range of your vehicle, even if no devices are plugged in.

Exit the Gear Tunnel Storage

While the vehicle is parked, someone who is trapped inside the Gear Tunnel storage can press either entrapment button to open both Gear Tunnel doors. The entrapment buttons glow in the dark for visibility.

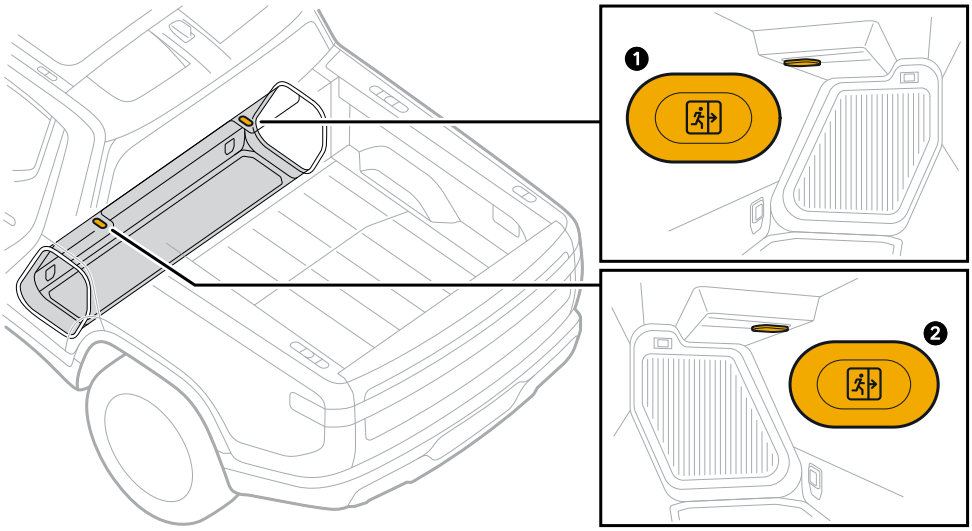

Item	Description
1	Driver-side entrapment button
2	Passenger-side entrapment button

IMPORTANT

The entrapment buttons won't release the door latches if the vehicle is in Drive, Neutral, or Reverse. If someone presses an entrapment button, a notification appears on the driver display. Prepare to park the vehicle immediately. After you park the vehicle, open the Gear Tunnel doors.

Maintain the Gear Tunnel Storage

You can remove the rubber mat from the Gear Tunnel storage to clean it.

1. Lift the rubber mat from the bottom of the Gear Tunnel storage.
2. Clean the mat with a solution of water and standard car wash liquid.

CAUTION

Don't use cleaners that have bleach or ammonium.

3. Dry the mat with a towel before you place it back inside the Gear Tunnel storage.

Security

About Gear Guard Security

The Gear Guard security system monitors the vehicle and deters theft for items stored in the truck bed. It includes the following:

- Gear Guard Cable, if equipped
- Gear Guard Video with Road Cam, Incidents, and Motion Cam
- Gear Guard Alarm

Gear Guard Settings

Go to **Settings** ⚙ **> Gear Guard** on the center display.

- **Road Cam:** Requires an external storage device for use. If Road Cam is turned on and an external storage drive is connected, the vehicle records your entire drive and saves Road Cam clips on demand. It also records while the vehicle is parked and occupied.

  Road Cam clips are short videos that you initiate by choosing **Save Clip** in the status bar. The Road Cam also records video and saves Road Cam clips when you honk the horn for more than a second or press the **SOS** button SOS.

  > **NOTE**
  > If you accidentally press the **SOS** button SOS, cancel the SOS call on the center display within 20 seconds, if possible. If there's an accidental SOS call, notify the SOS call operator to avoid first responders being dispatched.

  The vehicle records both the continuous recordings and Road Cam clips on the external storage device. Road Cam clips appear on the Road Cam video tab.

  > **NOTE**
  > For initial setup of the Road Cam, shift the vehicle to **P** (Park). Go to **Settings** ⚙ **> Gear Guard** on the center display. Then choose **Set Up Now** and acknowledge the terms of use on the center display. Follow the on-screen instructions.

  - **Road Cam Chime:** Enabled by default if Road Cam is turned on and an external storage device is connected. Turn on **Road Cam Chime** to hear a chime when the vehicle starts or stops recording a Road Cam clip.
  - **Storage Device:** To safely remove the external storage device from the vehicle, choose **Eject**.

- **Incidents:** Enabled by default. If enabled, the vehicle automatically records certain driving events such as collisions or hard braking. You can turn Incidents on or off. Recorded videos appear on the Incidents video tab.

- **Motion Cam:** Disabled by default. Turn on **Motion Cam** to record motion around your vehicle while you're away from it. You can arm or disarm Motion Cam from the Rivian mobile app or Apple Watch app, if installed and enabled. You can't watch the Motion Cam video from the Apple Watch.

  You can also turn on Motion Cam to record video during an alarm event. Recorded videos appear on the Motion Cam video tab.

  - **Always on:** The Motion Cam is set to Always on by default. Choose **Always on** to record video in any location.
  - **Off at Home:** Choose **Off at Home** to record video only when the vehicle is away from home.

  > **NOTE**
  >
  > If you set the Motion Cam to **Off at Home**, ensure you set a home address in the Navigation app; otherwise, the Motion Cam uses the default, **Always on**.

- **Live Cam:** Available to Connect+ subscribers. Enabled by default. When enabled, you can view live camera feeds from the Rivian mobile app when the vehicle is parked. You can also toggle Live Cam from the Settings app.

  When Live Cam is on, you can view live camera feeds from any of the Gear Guard cameras using the Rivian mobile app on your mobile device. Each streaming session is limited to three minutes and you can stream for a total of one hour per day. Only one device may be used to stream at a time.

  > **NOTE**
  >
  > You must be a Connect+ subscriber and allow precise location sharing in the Rivian mobile app in order for live camera streaming to be available.
  >
  > Running a virtual private network (VPN) client on your mobile device may prevent your ability to view live camera feeds.

- **Alarm:** Enabled by default. The Alarm protects your vehicle when it's locked. When the Alarm is triggered, the vehicle flashes the exterior lights, sounds the horn, and sends a message to the owner's Rivian mobile app or Apple Watch app, if installed and enabled.

  > **NOTE**
  >
  > Push notifications are available on the Rivian mobile app and Apple Watch, if installed and enabled. The Alarm status is available on the Rivian mobile app, but not Apple Watch.

  If the Motion Cam is turned on, the vehicle also records video. Recorded videos appear on the Motion Cam video tab.

Gear Guard Cable

If your vehicle is equipped with the onboard air compressor, you can use the Gear Guard cable and latches located below the air compressor to help secure your gear. The Gear Guard cable is a proprietary steel core cable that locks into one side of the truck bed. The extended length Gear Guard cable is an optional product available at rivian.com.

To secure your gear, follow these instructions:

1. Thread the cable through your gear.
2. Locate the latches below the air compressor. Insert each end of the cable into a latch until each latch closes with a click.

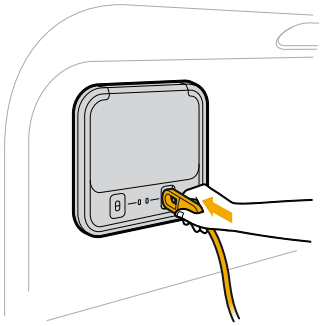

> **NOTE**
> To use the full length of the cable to secure gear, thread one end of the cable through the loop on the other end of the cable before you secure it to the latch.

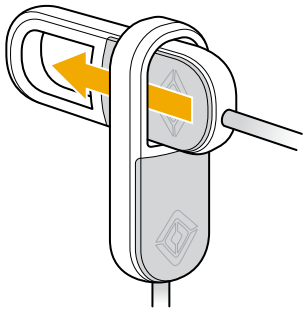

3. Lock the vehicle or all doors to lock the ends of the cable into place.

A flashing light next to a latch indicates that the latch is locked.

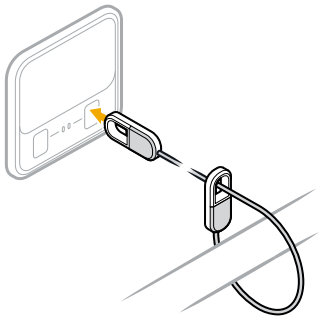

> **NOTE**
> If you can't insert an end of the cable into a latch, the latch may be in the closed position. Use a flathead screwdriver to push the latch sideways to open it.

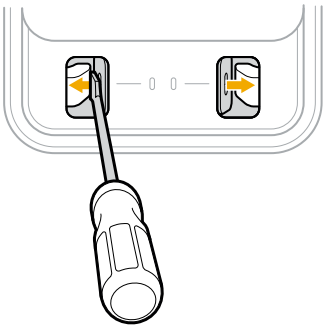

Unlock all doors to unlock the cable.

Gear Guard Video

About Gear Guard Video

A camera monitors the truck bed, and additional cameras monitor the perimeter of the vehicle.

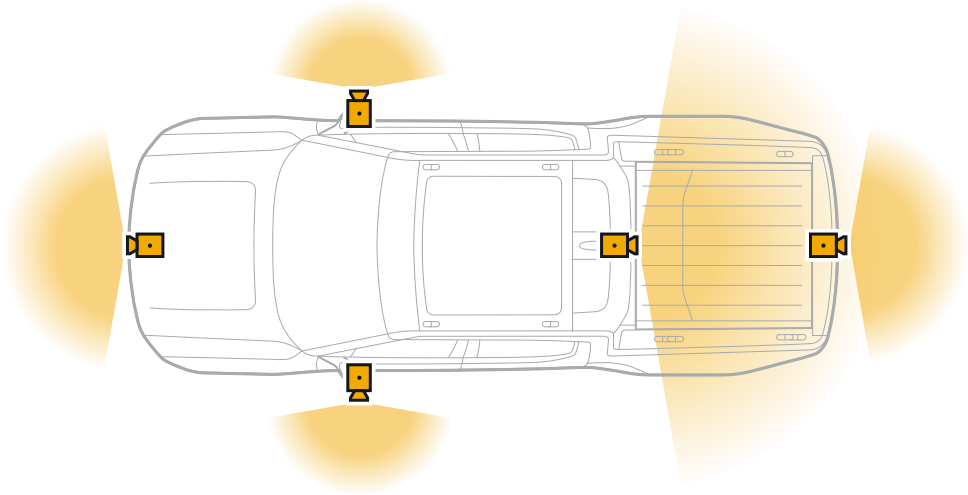

These cameras offer the following types of video recording:

- **Road Cam:** Requires an external storage device for use. If Road Cam is turned on and an external storage drive is connected, the vehicle records your entire drive and saves Road Cam clips on demand. It also records while the vehicle is parked and occupied.

  Road Cam clips are short videos that you initiate by choosing **Save Clip** in the status bar. The Road Cam also records video and saves Road Cam clips when you honk the horn for more than a second or press the **SOS** button SOS.

  The vehicle records both the continuous recordings and Road Cam clips on the external storage device. Road Cam clips appear on the Road Cam video tab.
- **Incidents:** Enabled by default. If enabled, the vehicle automatically records certain driving events such as collisions or hard braking. You can turn Incidents on or off. Recorded videos appear on the Incidents video tab.
- **Motion Cam:** Disabled by default. Turn on Motion Cam to record motion around your vehicle while you're away from it. You can also turn on Motion Cam to record video during an alarm event. Recorded videos appear on the Motion Cam video tab.
- **Alarm:** Enabled by default. The Alarm protects your vehicle when it's locked. When the Alarm is triggered, the vehicle flashes the exterior lights, sounds the horn, and sends a message to the owner's Rivian mobile app.

  If the Motion Cam is turned on, the vehicle also records video. Recorded videos appear on the Motion Cam video tab.

Gear Guard Features	Recording Triggers	Saved Location	View Access
Road Cam: Road Cam clips	• Choose **Save Clip** in the status bar. • Honk the horn for more than a second. • Press **SOS** SOS.	External storage device	Road Cam video tab (The external storage device must be connected.)
Road Cam: Continuous recordings	The vehicle continuously records video while it moves.	External storage device	Your computer (Eject the external storage device and connect it to your computer.)
Incidents	The vehicle detects certain driving events, such as collisions or hard braking.	Onboard hard drive	Incidents video tab
Motion Cam	The vehicle detects motion while the Motion Cam is turned on and recording is available.	Onboard hard drive	Motion Cam video tab (Automatically deleted after 10 days unless you choose **Star** ☆.)
Alarm	The Alarm is triggered while the Motion Cam is turned on.	Onboard hard drive	Motion Cam video tab (Automatically deleted after 10 days unless you choose **Star** ☆.)

NOTE

If the Gear Guard features with video recording are turned on, they may reduce the range of the vehicle over time.

View Recorded Videos

Choose **Gear Guard** from the menu on the center display to view recorded videos saved as the following types:

- **Road Cam:** Triggered when you choose **Save Clip**. The Road Cam also records video and saves Road Cam clips when you honk the horn for more than a second or press the SOS button SOS. The vehicle automatically saves Road Cam clips to your external storage device.

  To view the Road Cam clips on the Road Cam video tab, the external storage device must be connected to one of the USB-C ports in the center console.

  > **NOTE**
  > To view the continuous recordings, access your external storage device from your computer and open the **Road Cam > Road Stream** folder.

- **Incidents:** Triggered by a certain driving event such as a collision or hard braking. The vehicle automatically saves Incident videos to the onboard hard drive.
- **Motion Cam:** Triggered when the Motion Cam detects motion while you're away from your vehicle or triggered by the Alarm if the Motion Cam is turned on. The vehicle automatically saves Motion Cam videos to the onboard hard drive.
- **Starred:** Lists videos you selected to appear on this video tab in the Gear Guard app. The following icons differentiate the types of videos:
  - Road Cam clip video icon
  - Incident video icon
  - Motion Cam video icon

IMPORTANT
The onboard hard drive automatically deletes Motion Cam videos after 10 days. To save Motion Cam videos, choose **Gear Guard** from the menu on the center display and choose **Star** ☆ for each video you want to save. If the onboard hard drive becomes full or close to full, the vehicle may delete old Motion Cam videos starting with the oldest videos first. After deleting Motion Cam videos, if there still isn't enough room for new recordings, then the vehicle won't record new Incident or Motion Cam videos.

On the Motion Cam video tab, videos from the same location are organized together into an event. A blue marker indicates that an event hasn't been viewed yet.

To select multiple events, choose **Select** and then select the events.

You have the following options:

- Choose **Delete** to immediately delete the events and their associated videos.

> **NOTE**
> If you delete a Starred video that is from the Motion Cam or Alarm, you also delete it from the corresponding event on the Motion Cam video tab. If you delete a Starred video that is a Road Cam clip, you also delete it from the external storage device.

- Choose **Cancel** to cancel your changes.
- Choose **More** ⊙ for the following:
  - Choose **Select all** to select all of the events.
  - Choose **Copy to storage device** to copy the events to your external storage device.

> **NOTE**
> You can't copy Road Cam clips because they are automatically saved to your external storage device.

When you view an event in the Gear Guard app, the first video that plays is the one whose camera first detected motion.

To watch a video:

1. Choose the video tab for **Road Cam**, **Incidents**, **Motion Cam**, or **Starred**.
2. Select a video or an event.
3. A vehicle image shows the different camera views available via thumbnails. Select the video you want to watch.

The video automatically plays in the video player.

You can navigate between events.

Play, pause, rewind, or forward a video. You have the following options:

- Choose **Download** ↓ to copy the video to your external storage device.
- Choose **Star** ☆ to display a video on the Starred video tab or save a Motion Cam video from automatic deletion.
- Choose **Delete** 🗑 to delete one video that you have selected within an event, or to delete all videos in an event.

> **NOTE**
> Deletion of a video or all videos for an event is permanent.

Copy a Video

To copy a video from the onboard hard drive to your computer, use your external storage device (not included).

> **NOTE**
> This can be the same external storage device used for the Road Cam.

The external storage device requires the following:

- 128 GB (minimum) of storage

  > **NOTE**
  > The maximum storage size is 2 TB.

- USB 3.x and USB 2.0 compatibility
- Solid State Drive (SSD) recommended
- 20 MB/s (minimum) random write speed
- FAT32 file system

  > **NOTE**
  > The vehicle requests to reformat your device if it detects a different file system.

To copy a video to your external storage device, follow these instructions:

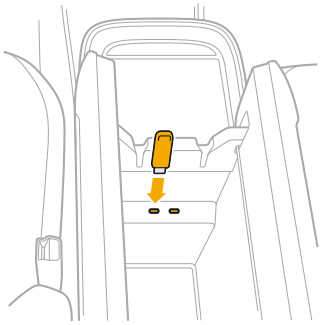

1. Connect the external storage device to one of the USB-C ports in the center console of your vehicle.

   > **NOTE**
   > Don't use a USB hub or splitter.

2. A prompt may appear on the center display. Choose **Format Device** to erase all data and format the external storage device for use by the Gear Guard app.

   > **NOTE**
   > The vehicle may take a few minutes to format the external storage device.

3. Choose **Gear Guard** from the menu on the center display.
4. Select the event and then select the video to download.
5. Choose **Download** to copy the video to your external storage device.
6. The vehicle saves the video on your external storage device.

To safely remove the external storage device from the vehicle, go to **Settings** **> Gear Guard** on the center display. Choose **Eject**.

Road Cam

Record video in the background and events in real time.

Set Up the Road Cam

The external storage device requires the following:

- 128 GB (minimum) of storage

> **NOTE**
> The maximum storage size is 2 TB.

- USB 3.x and USB 2.0 compatibility
- Solid State Drive (SSD) recommended
- 20 MB/s (minimum) random write speed
- FAT32 file system

> **NOTE**
> The vehicle requests to reformat your device if it detects a different file system.

For initial setup to enable recording:

1. Shift the vehicle to **P** (Park).
2. Go to **Settings** ⚙ **> Gear Guard** on the center display.
3. Choose **Set Up Now** and acknowledge the terms of use on the center display.
4. Connect your external storage device to one of the USB-C ports in the center console of your vehicle.

> **NOTE**
> Don't use a USB hub or splitter.

5. Follow the on-screen instructions.
6. A prompt may appear on the center display. Choose **Format Device** to erase all data and format the external storage device for use by the Gear Guard app.

> **NOTE**
> The vehicle may take a few minutes to format the external storage device.

7. Choose **Done** when the initial setup is complete.

Manage the Road Cam

The Road Cam Chime setting controls whether you hear a chime when the vehicle starts or stops recording a Road Cam clip. It is enabled by default if Road Cam is turned on and an external storage device is connected.

To enable or disable the chime:

1. Go to **Settings** ⚙ **> Gear Guard** on the center display.
2. Turn **Road Cam Chime** on or off.

To enable or disable continuous recordings and Road Cam clips:

1. Go to **Settings** ⚙ **> Gear Guard** on the center display.
2. Turn **Road Cam** on or off.

> **NOTE**
> Vehicle Shipping mode disables the Road Cam.

Save Road Cam Clips

Choose **Save Clip** in the status bar to record a 2-minute clip and watch it later on the Road Cam video tab. The vehicle sounds a chime (if enabled) and the button turns red to indicate recording. The clip begins 15 seconds before you choose **Save Clip** and ends 1 minute and 45 seconds after you choose **Save Clip**.

You can choose **Save Clip** to stop recording before the 2-minute mark.

The Road Cam also records video and saves Road Cam clips when you honk the horn for more than a second or press the **SOS** button SOS.

> **NOTE**
> If you accidentally press the **SOS** button SOS, cancel the SOS call on the center display within 20 seconds, if possible. If there's an accidental SOS call, notify the SOS call operator to avoid first responders being dispatched.

Access the Road Cam Clips

You can view Road Cam clips as follows:

- On the Road Cam video tab while the external storage device is connected to the vehicle
- On your computer if the external storage device is removed from the vehicle and connected to your computer

NOTES

- Recording starts 15 seconds before you initiate the Road Cam clip.
- If the external storage device becomes full or close to full, the vehicle notifies you to remove Road Cam clips. If there isn't enough room, the vehicle won't record new Road Cam clips.

Access the Continuous Recordings

The vehicle continuously records short segments of streaming video on your external storage device.

To view the continuous recordings:

1. Go to **Settings** ⚙ **> Gear Guard** on the center display.
2. Choose **Eject** and remove the external storage device from your vehicle.
3. Connect the external storage device to your computer.
4. Open the **Road Cam > Road Stream** folder.

CAUTION

- Do not modify or delete the Rivian-created file structure or supporting files on the external storage device that has been set up for use in your vehicle. These folders and files are used by your vehicle to recognize the drive and manage recordings.
- If you manually delete files from the external storage device using your computer, also empty that computer's Trash or Recycle Bin before disconnecting the drive. Some computers place deleted files into a hidden trash folder on the external storage device, and those files may continue using storage space until the trash is emptied.

NOTE

If the external storage device becomes full or close to full, the vehicle automatically deletes the oldest continuous recordings to make room for new ones.

Incidents

Incidents is enabled by default. The vehicle automatically records certain driving events such as collisions or hard braking.

To enable or disable recording:

1. Go to **Settings** ⚙ **> Gear Guard** on the center display.
2. Turn **Incidents** on or off.

Recording starts 15 seconds before the vehicle detects the certain driving event. The vehicle records 2-minute Incident videos on the onboard hard drive. Recorded videos appear on the Incidents video tab.

NOTES

- There is no guarantee that the cameras will record all relevant images for a certain driving event, such as a collision or hard braking.
- If the onboard hard drive becomes full or close to full, the vehicle may delete old Motion Cam videos starting with the oldest videos first. After deleting Motion Cam videos, if there still isn't enough room for new recordings, then the vehicle won't record new Incident or Motion Cam videos.
- Vehicle Shipping mode disables Incidents.

Motion Cam

The Motion Cam records motion around your vehicle while you're away from it. Use the Motion Cam when the vehicle is in any location or away from home, under the following conditions:

- The Motion Cam is turned on.
- The vehicle is locked.
- The vehicle is sleeping.

> **NOTE**
> Vehicle Shipping mode disables the Motion Cam.

To enable or disable recording:

1. Go to **Settings** ⚙ **> Gear Guard** on the center display.

   > **NOTE**
   > For initial use, acknowledge the terms of use on the center display.

2. Turn **Motion Cam** on or off.
3. If you turned on Motion Cam, choose one of the following:
   - **Always on:** Choose **Always on** to allow the Motion Cam to record video in any location.
   - **Off at Home:** Choose **Off at Home** to record video only when the vehicle is away from home.

     > **NOTE**
     > If you set the Motion Cam to **Off at Home**, ensure you set a home address in the Navigation app; otherwise, the Motion Cam uses the default, **Always on**.

If recording is available, the cameras record video when a monitoring camera detects the presence of people or other vehicles near the exterior of the vehicle. The center display indicates that the Motion Cam is on. The Gear Guard security system makes no audible alarm.

All cameras record video for 30 seconds on the onboard hard drive. Recorded videos appear on the Motion Cam video tab.

> **NOTE**
> If the onboard hard drive becomes full or close to full, the vehicle may delete old Motion Cam videos starting with the oldest videos first. After deleting Motion Cam videos, if there still isn't enough room for new recordings, then the vehicle won't record new Incident or Motion Cam videos.

You can turn **Motion Cam** on or off using the Rivian mobile app.

Gear Guard Alarm

The Alarm is enabled by default. If the Motion Cam is turned on, the vehicle records video. Recorded videos appear on the Motion Cam video tab.

1. Go to **Settings** ⚙ **> Gear Guard** on the center display.
2. Turn **Alarm chime** on or off.

When turned on, the Alarm functions under these conditions:

Condition	Actions
The Gear Guard security system detects an opened door, hood, or Gear Tunnel door.	The vehicle flashes the exterior lights, sounds the horn, and sends a message to the owner's Rivian mobile app. If the Motion Cam is turned on, the vehicle records video.
The Gear Guard security system detects the activation of panic mode.	The vehicle flashes the exterior lights, sounds the horn, and sends a message to the owner's Rivian mobile app. If the Motion Cam is turned on, the vehicle records video.

If recording is available, the cameras record 30-second videos on the onboard hard drive. Recorded videos appear on the Motion Cam video tab.

> **NOTE**
> Vehicle Shipping mode disarms the Alarm.

Arm or Disarm the Alarm

The Alarm automatically arms itself when all of the following conditions apply:

- You enable the Alarm.
- You close and lock all of the doors.
- Seat belts are unbuckled.
- The vehicle doesn't detect anyone inside the cabin.
- The vehicle doesn't detect an authorized device, such as a phone key, in its vicinity.

If you have armed the Alarm, the following conditions trigger it:

- The vehicle detects an opened door, hood, or Gear Tunnel door.
- If equipped:
  - The vehicle detects motion inside the cabin.
  - The vehicle tilts, as if being towed.

NOTES

- If you have a key fob, press the **Lock** button for 2 seconds to activate panic mode at any time, regardless of the Alarm status. If the Motion Cam is turned on, the vehicle records video.
- When the Alarm is triggered, the screens will not be accessible until the Alarm has been disarmed and an authorized user is detected.

Stop the Alarm

When the Alarm is triggered, the vehicle flashes the exterior lights, sounds the horn, and sends a message to the owner's Rivian mobile app. If the Motion Cam is turned on, the vehicle records video. No one can drive the vehicle.

To stop the Alarm, do one of the following:

- Unlock the vehicle with a key. This disarms the Alarm.
- Lock the vehicle with a key. This allows the Alarm to remain armed.
- Allow the Alarm to time out after 30 seconds if the door, hood, or Gear Tunnel door is closed after the initial alarm. This allows the Alarm to remain armed.

NOTES

- If the Alarm is repeatedly triggered, the Alarm turns off after 5 minutes. The Alarm automatically turns back on when the vehicle turns off the built-in theft protection.
- The vehicle has a built-in security feature that prevents unauthorized drives.

Camping and Recreation

Camping Controls

About Camping Controls

To access the camping controls, choose **Camping** ⚠ from the menu on the center display.

IMPORTANT

Camping controls, except for Outlets and Camp Courtesy, are only available when the vehicle is in **P** (Park).

If turned on, Camp Courtesy automatically turns off when the vehicle reaches the speed of 15.5 mph (25 km/h).

Energy Use

Manage energy is turned off by default, so your vehicle uses energy as usual. Turn on **Manage energy** to choose the appropriate level of energy use:

- **Stay on:** Choose **Stay on** to maintain a comfortable cabin with climate control so you can sleep in the cabin. The vehicle doesn't sleep. General vehicle power, outlets, climate, displays, cabin lights, and audio remain available.
- **Stay off:** Choose **Stay off** to reduce energy use. General vehicle power, outlets, climate, displays, cabin lights, audio, and Gear Guard turn off; however, reading lights remain available. To turn the vehicle back on, unlock it and press the brake pedal.

The vehicle turns off Manage energy when you drive or the vehicle exits Stay off.

> **NOTE**
>
> In Stay off or Stay on modes:
>
> - Pet Comfort isn't available.
> - The reading lights are available if the vehicle detects the driver's presence.

Outlets

The 12 V and USB-C outlets, as well as the wireless charging pad, are always on when the vehicle is in use. Turn on **Outlets** to keep the power on when you are away from your vehicle.

To send power to the 120 V power outlets, 12 V and USB-C outlets, and the wireless charging pad, you have two options:

- **Auto:** Choose **Auto** if you want the outlets to automatically turn on when you use your vehicle and turn off when you leave.
- **Timer:** Choose **Timer** to set the timer to keep the outlets on for a certain length of time even if you leave the vehicle. Choose **Update timer** to start the timer. The outlets turn off when the timer ends.

NOTES

- The Auto and Timer options can be active at the same time.
- While the timer is active, the outlets automatically turn off if the battery range becomes very low.

120 V Outlets

DANGER

Rivian-supplied accessories work best with your vehicle. To reduce risk of fire or a thermal event, use caution when leaving non-Rivian devices plugged in and unattended in the Gear Tunnel.

- Don't let objects obstruct any outlets being used.
- If you use a powered device not supplied by Rivian, turn off and unplug the 120 V outlet before you close the Gear Tunnel doors.
- Objects in the Gear Tunnel may shift as you drive. Use caution when opening the Gear Tunnel doors.

CAUTION

- Don't use an outlet to power any device that requires over 1,500 W (1.5 kW) of power. If the 120 V circuits overload, the power cuts off. Unplug devices before you turn the outlets back on.
- Don't use more than one high-powered device at the same time. The 120 V outlets share the 1,500 W (1.5 kW) of power.
- Leaving the 120 V outlets powered on reduces the range of your vehicle, even if no devices are plugged in.

Camp Courtesy

To move around the vehicle without disturbing others, turn on **Camp courtesy** to turn off the following:

- Exterior lights, such as the lights that automatically turn on when you lock or unlock the vehicle or open the doors
- Vehicle sounds, such as lock sounds and exterior chimes
- Passive entry
- Gear Guard Alarm sound

When Camp Courtesy is turned on, use the lights stalk to turn headlights on or off. The vehicle sets the lights to Auto mode if you turn off Camp Courtesy or when the vehicle reaches the speed of 15.5 mph (25 km/h).

> **NOTE**
> When Camp Courtesy is active, the vehicle may limit heating or air conditioning to reduce noise; however, you can manually adjust the climate controls to accelerate heating or cooling.

Turn Displays Off

Choose **Turn displays off** to turn off the center, driver, and rear displays.

To turn on the displays, tap the center display. If they don't turn on, press the brake pedal. If neither action turns on the displays, the vehicle is asleep. Unlock the vehicle and press the brake pedal to wake it up and turn on the displays.

Flood Lights

Flood lights allow you to easily view the area in front of your vehicle when it's dark outside. They are located behind the side mirrors and are available when the vehicle is in **P** (Park).

Choose a **Flood Light** button, or , to turn a flood light on or off.

> **NOTE**
> If turned on, flood lights automatically turn off when you shift the vehicle out of **P** (Park).

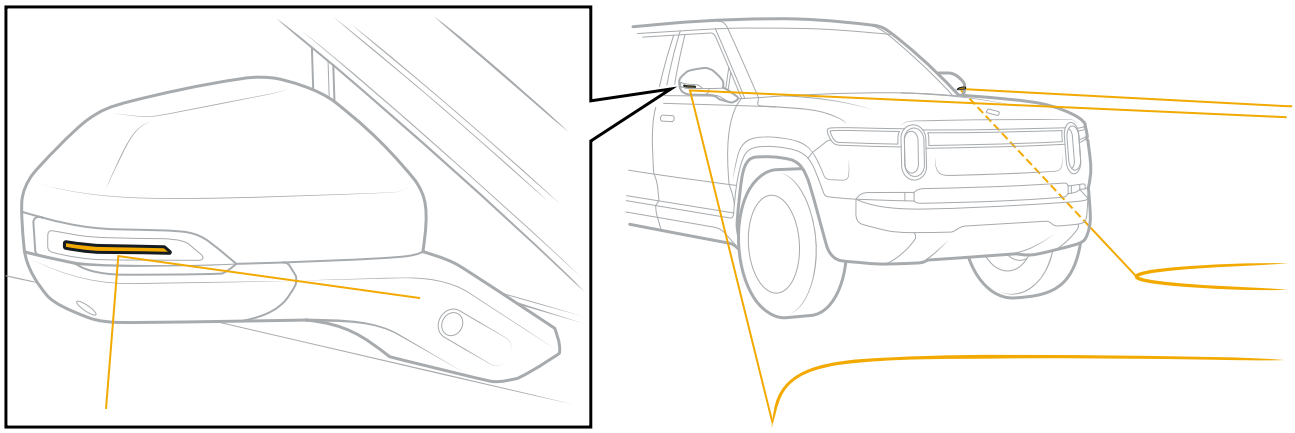

Vehicle Leveling

You can level your vehicle when parked on uneven terrain.

Level the Vehicle

1. Find an appropriate parking spot.
2. Park your vehicle.
3. Clear the area surrounding your vehicle.

> **IMPORTANT**
> Ensure you have clearance above and below your vehicle to raise or lower its ride height.

4. Close all doors, including the cabin doors, front trunk, and Gear Tunnel. Remove any charging plug or trailer, if attached.
5. Choose **Level** on the center display. The vehicle checks whether it can safely level itself on the surrounding terrain.
   - If the terrain is suitable, the vehicle levels itself. This may take several minutes.

     > **NOTES**
     > - You may exit the vehicle during leveling. While the door is open, the vehicle pauses leveling. After you close the door, the vehicle resumes leveling.
     > - The vehicle may make sounds while the air suspension adjusts to level the vehicle.

   - If the terrain isn't suitable, the vehicle notifies you to find suitable terrain.

You may need to relevel your vehicle under the following conditions:

- If you open a door and it remains open for a long time, the vehicle stops leveling.
- If the leveled vehicle is parked for a long time, the vehicle may droop over time.

To relevel the vehicle, you have two options:

- Choose **Reset ride height** and then choose **Level**.
- Shift to **D** (Drive) and back to **P** (Park).

Reposition the Vehicle While Leveling

To maintain your vehicle's level while repositioning, drive or reverse slowly. Driving faster stops vehicle leveling. To level the vehicle again, choose **Reset ride height** and then choose **Level**.

To automatically resume leveling or to level to new terrain after repositioning, shift to **P** (Park).

Reset Ride Height

To return the vehicle to its previous ride height, choose **Reset ride height** or drive the vehicle.

NOTES

- The vehicle may make sounds while the air suspension adjusts to reset to the previous ride height.
- If you drive the vehicle after it is leveled, its handling, driving performance, and speed are limited until the vehicle automatically returns to its previous ride height.

Show and Tell

About Show and Tell

Show and Tell mode does the following:

- Keeps the displays and exterior lights turned on.
- Keeps the vehicle awake.
- Disables the horn.
- Disables passive entry.
- Sets the lights to **Auto**, which allows for the brightest lights, if lights are turned off when you enable Show and Tell mode.
- Enables Limit Climate Performance by default.

> **NOTES**
>
> - When Limit Climate Performance is enabled, the fan is still available but air conditioning is turned off to avoid water buildup under the vehicle.
> - Turn off **Limit Climate Performance** to enable the air conditioning controls.

- Directs any SOS calls to a prerecorded message.

> **NOTE**
>
> To make an actual SOS call, choose **Exit Show and Tell** and then press the **SOS** button SOS.

To turn on Show and Tell mode:

1. Put the vehicle in **P** (Park). Show and Tell mode is only available while the vehicle is in **P** (Park).
2. Go to **Settings** ⚙ **> Maintenance** on the center display.
3. Turn on **Show and Tell**.

> **IMPORTANT**
>
> When turned on, Show and Tell mode reduces the range of the vehicle over time.

Show and Tell mode automatically turns off under any of the following conditions:

- The vehicle has 30 mi (49 km) of range left.
- You shift the vehicle out of **P** (Park).
- You use the lights stalk to turn off the headlights.

Accessories

Air Compressor

About the Air Compressor

The optional air compressor hose and accessories are stored in the front trunk. These accessories allow you to inflate bicycle tires and other adventure equipment up to 145 psi. The air compressor also features a quick-disconnect air chuck with a hose that extends to all four wheels.

Use the Accessory Kit

Use these accessories to fill or deflate items such as kayaks, balls, and tires for bicycles and motorcycles. Refer to information about sealing a flat tire for instructions that use these tools.

The kit consists of the following items:

- 20 ft hose with hook-and-loop strap
- Quick Start Guide
- Air chuck with quick-disconnect fitting
- Inflation needles, fill valves, valve stem cap, deflate tube, fill adapter, and adapters
- Schrader valve, core and tool to pull core out
- Tire sealant kit (if equipped)

1. Connect one female end of the air hose quick connector to the air compressor by pulling the sleeve of the quick connector back.

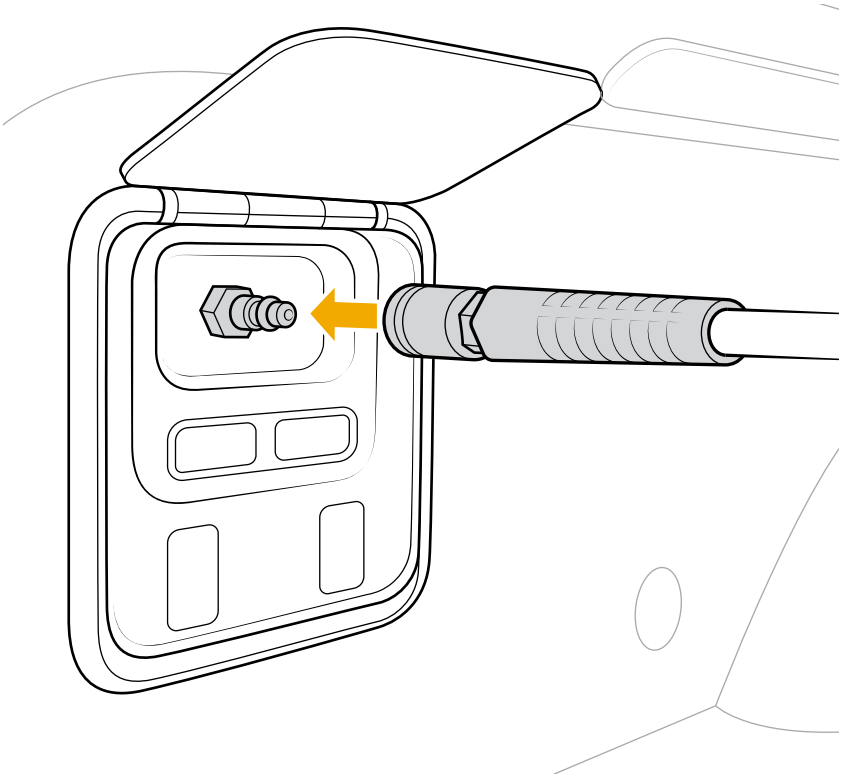

2. Connect the appropriate air-fitting to the other end of the hose.

> **NOTE**
> The air connectors are not universal. Ensure you use the air-fittings from the Rivian accessory kit that have the same fitting profile. Otherwise, you may need an adapter hose.

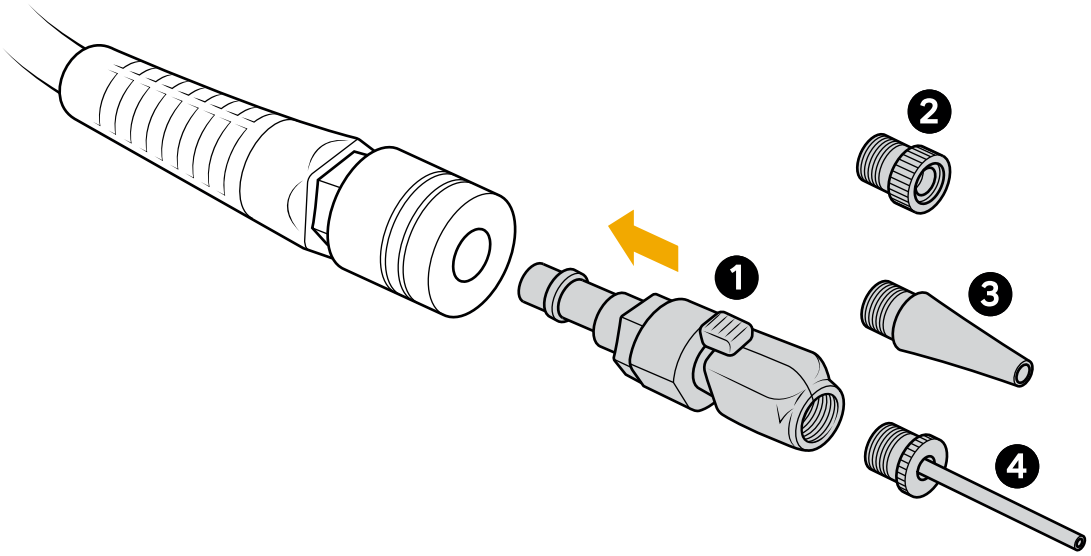

Item	Description
1	Schrader fill valve
2	Presta valve adapter
3	Plastic nozzle
4	Needle nozzle

> **NOTES**
> - Use the Schrader fill valve to air down or fill your tires.
> - Use the Presta valve for bikes with narrower rims, such as road bikes or hybrid bikes.
> - Use the plastic nozzle to fill kayaks.
> - Use the needle nozzle to fill sports equipment such as balls.

Use the Air Compressor

You can use the air compressor (if equipped) when the vehicle is in **P** (Park) and unlocked. The air compressor is ready when the display shows a pressure reading.

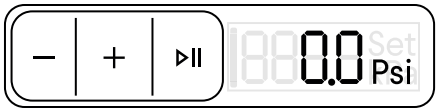

Button	Function
—	Decrease the set pressure
+	Increase the set pressure
▷II	Start or pause the compressor

Inflate Tires and Adventure Gear

Inflate tires or objects that require a target pressure:

1. Check the recommended cold inflation pressure for the tire or adventure equipment before connecting the air compressor. Tire information can be found on the Tire and Loading Information label on the driver door pillar.
2. Push the chuck firmly into one end of the pressure hose.
3. Connect additional adapters if needed.
4. Push the opposite end of the pressure hose onto the compressor's quick-disconnect fitting. The hose snaps onto the valve.
5. Connect the air chuck to the tire or equipment you are inflating. The air chuck locks on the valve stem. The display shows the detected pressure.
6. Press the **Plus** + button to set the recommended tire cold inflation pressure or target pressure of other equipment. "Set" appears on the display. Hold the **Plus** + button or **Minus** − button to quickly advance to your selected pressure.

7. Press the **Start** button to start the compressor. The compressor stops when it reaches the target pressure.

> **NOTE**
> The air compressor stops periodically to check the pressure level. It can happen a few times before it reaches the target pressure. It may stay off for up to 8 seconds before resuming. The word Set disappears when target pressure is reached. Ensure you see Set again to fill another object. If target is not set, the air will flow freely and continuously.

8. Squeeze the lever on the air chuck to remove it from the tire or equipment.

> **NOTES**
> - If you don't press the **Start** button, the pressure setting times out after 5 minutes. If the system times out, set the target pressure again, and then press **Start**.
> - Press the **Pause** button to pause the compressor. You can increase or decrease the target pressure when the compressor is paused.
> - When the air compressor pauses, it is checking actual pressure versus set pressure. After "Set" stops blinking on the display, the task is completed. Disconnect the hose and move it to the next tire if applicable.

CAUTION

The compressor is equipped with a thermal reset switch that powers off the compressor if it gets too hot. After the compressor cools, the switch resets.

Inflate small objects that don't have a specific target pressure:

1. Connect the Schrader Valve or adapter to the object.
2. Press the **Start** button to start the compressor. Ensure "On" appears on the display.
3. Monitor the object until desired pressure or firmness is reached.
4. Press the **Pause** button to pause the compressor.
5. Replace the cover of the object, if applicable, once the object is filled to prevent air loss.

NOTE

Press the **Start** button again and repeat steps 3 and 4 if the object or equipment is not filled to your liking.

First Aid Kit

About the First Aid Kit

The first aid kit is located in the front trunk storage compartment. It includes basic first aid items for minor to major injuries. Refer to the first aid instruction booklet inside the kit.

> **NOTE**
> Replace any used or out-of-date contents.

Rivian Torch

Use the Rivian Torch

DANGER

Keep the torch away from high heat sources and fire.

WARNING

Don't shine the torch at anyone's eyes.

CAUTION

If the torch is in the charging compartment, ensure that the torch is completely seated before closing the driver-side door. If you close the driver-side door while the torch sticks out, this may damage the door, door frame, or torch.

1. To release the torch from its charging compartment in the driver-side door, press it firmly.
2. Wait two seconds for the charging compartment to release the torch.
3. Pull out the torch.

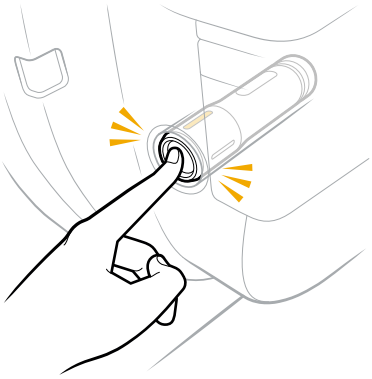

4. Press the switch (1) to turn on Low.
5. Press again to select the next brightness setting.

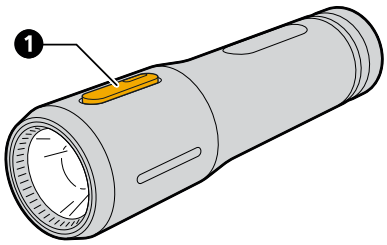

To turn off the light, use the switch to cycle through the settings, or press and hold the switch.

NOTE

The light flashes three times to indicate a low battery charge.

Torch Settings

Setting	Brightness*	Use Time before Recharge*
Low	Up to 60 lumens	Up to 18 hours
Medium	Up to 350 lumens	Up to 7 hours
High	Up to 1,000 lumens	Up to 2 hours
Off	—	—

* Varies depending on the ambient temperature and battery health.

Charge the Torch

IMPORTANT

Ensure the torch is clean before charging. Use a microfiber cloth to remove any dirt or debris.

1. Return the torch to its charging compartment in the driver-side door.
2. Press firmly until it clicks into place.

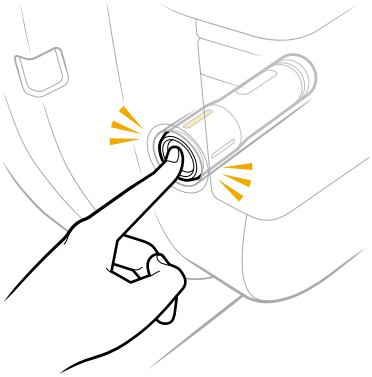

The torch takes up to 2.5 hours to fully charge.

NOTE

To check if the torch is charging, turn it on before returning it to its charging compartment. The torch automatically turns off if it is charging.

Replace the Battery

WARNING

- Power the torch with the Rivian-supplied battery only. To obtain a new rechargeable battery, contact Rivian.
- Don't allow the bottom of the lithium-ion battery to touch a metal object. This could short-circuit the battery.
- Don't dispose of the battery in a fire. To dispose of any used battery, follow the local regulations for the disposal of household hazardous waste.

1. Unscrew the end cap (2).

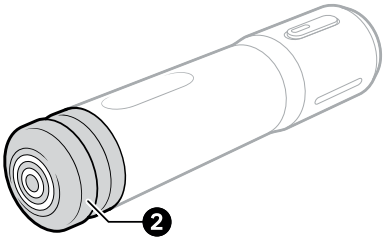

2. Remove the old battery and insert the new battery.
3. Screw on the end cap.

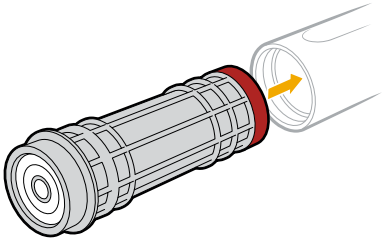

Charging Compartment

CAUTION

Clean the charging compartment with a vacuum cleaner only. Don't use compressed air.

1. To release the torch from its charging compartment in the driver-side door, press it firmly.
2. Wait two seconds for the charging compartment to release the torch.
3. Pull out the torch.
4. Use a vacuum cleaner to clean the charging compartment.

Powered Tonneau Cover

About the Powered Tonneau Cover

The optional powered tonneau cover provides lockable storage for your gear and protects against light weather.

CAUTION

- The powered tonneau cover is not watertight. Use the front trunk, Gear Tunnel, or the back row under-seat storage bin to protect your gear from water.
- Don't sit, stand, or place heavy objects on the tonneau cover.
- Don't secure objects directly to the tonneau cover.

Operate the Powered Tonneau Cover

If equipped, use one of the following to extend and retract the tonneau cover:

- Button on the exterior bed rail
- Center display

> **NOTE**
> If the tonneau cover detects an obstacle while it extends or retracts, it will stop. You can enable or disable the powered tonneau cover by selecting **Settings** ⚙ **> Access** on the center display.

Troubleshooting

Excess debris on the powered tonneau cover may cause it to squeak during extending and retracting. If this occurs, clean or lubricate the tonneau cover.

If the powered tonneau cover is stuck in a retracted or extended state in freezing conditions, follow the cold weather procedures to resolve the problem.

Extend or Retract with the Button

Press the tonneau cover button on the exterior bed rail one time to extend or retract the powered tonneau cover.

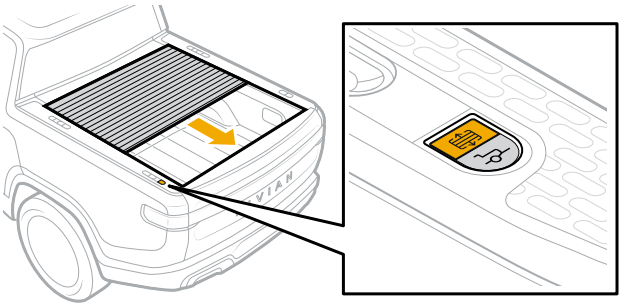

There are two ways to partially extend or retract the tonneau cover:

- **Single button presses:** Press the tonneau cover button to start motion and press again to stop the travel at the desired position.
- **Manual operation:** Press and hold the button to start motion and release it at the desired location to stop travel.

NOTES

- Be sure to look out for anything obstructing the path of the tonneau cover and press button again or release to cease travel before contacting any cargo.
- The tonneau cover button is only available on vehicles that are equipped with a powered tonneau cover.
- The tonneau is not a tie down device. Use appropriate equipment and accessory ports to tie cargo down.

Extend or Retract with the Center Display

1. Go to **Quick Controls** on the center display.
2. Choose the tonneau cover button to extend or retract the powered tonneau cover.

> **NOTES**
> - If the tonneau cover button is deactivated (greyed out) you can activate it by selecting **Settings** ⚙ **>** **Access** on the center display.
> - Use the tailgate camera to view the tonneau cover to double-check if it's extended or retracted.

Reset the Powered Tonneau Cover

To reset the powered tonneau cover, select this option from the center display or use the tonneau cover button on the truck bed for a manual reset.

Reset from the Center Display

The system notifies you if you need to reset the powered tonneau cover. When that happens, you can either reset the tonneau cover or run the reset procedure later.

> **NOTE**
> You can't operate the powered tonneau cover until you reset it if the notification to reset appears.

> **WARNING**
> Ensure the path of the powered tonneau cover is free from obstructions such as cargo and travels freely without excessive debris before performing the reset procedure.

Manual Reset Using the Powered Tonneau Cover Button

1. To start the manual reset, press, press, press, then press and hold (● ● ● ▬) the tonneau cover button until the tonneau cover starts moving. Once moving, you can release the button while the tonneau completes its calibration cycle.
2. Wait for the calibration to complete. Check for a notification on the center display.

> **NOTE**
> Contact Rivian if the powered tonneau cover reset was unsuccessful.

Clean and Lubricate the Tonneau Cover

It's important to keep the powered tonneau cover clean for smooth operation and to prevent damage.

- Clear any excess debris before extending or retracting the tonneau cover.
- Clean the tonneau cover with water and mild soap, as shown below.

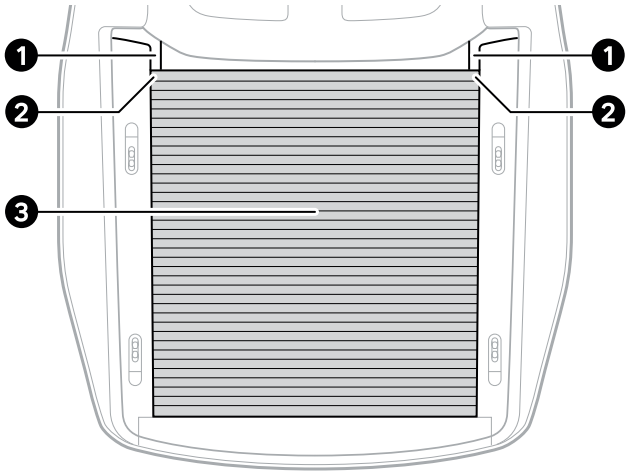

Item	Description
1	Target trim interfaces.
2	Target inner corners.
3	Clean the slat assembly.

When rinsing, target the areas shown.

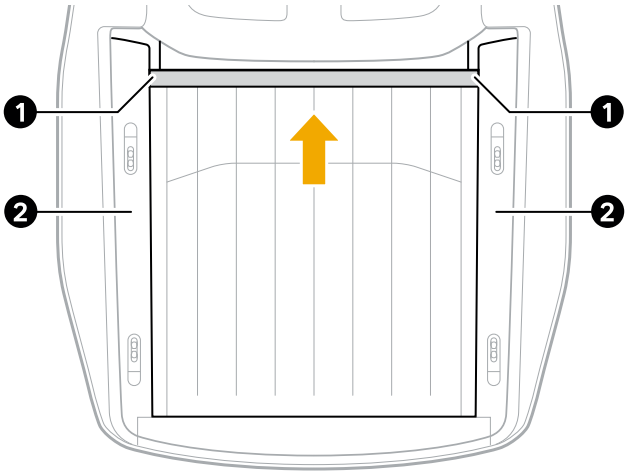

Item	Description
1	Target flushing the inner corners.
2	Wipe down the rails.

If the tonneau cover squeaks and cleaning doesn't fix it, apply dry silicone lubricant to the inner cassette as shown.

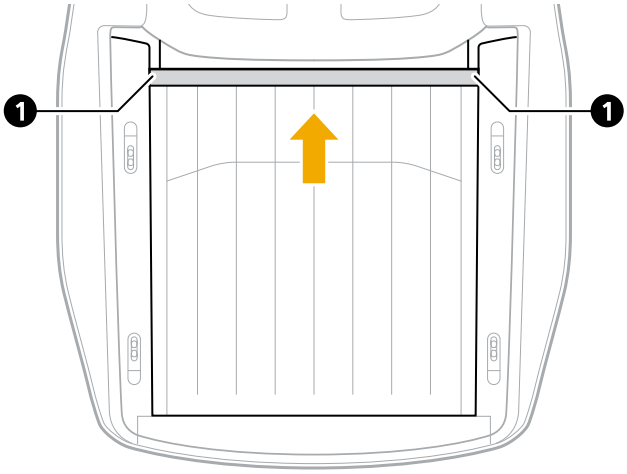

Item	Description
1	Target inner corners in full retract and while the tonneau is operating. Repeat while operating on both sides of the vehicle so both corners receive lubrication.

Operating in Cold Conditions

Leave the powered tonneau cover in its extended position if moisture or freezing temperatures are expected. This makes it easier to clear any ice that forms.

If the powered tonneau cover doesn't operate in cold or icy conditions, try bringing the vehicle into a warmer place, such as a climate-controlled garage. This allows ice to thaw and permits normal operation.

WARNING

Do not attempt to reset the system if the powered tonneau cover is obstructed.

Perform these steps to restore normal operation.

Powered Tonneau Cover is Fully Retracted

1. Try to retract the tonneau cover with a single button press five times.
2. Try the press and hold mode.
3. Apply deicer or warm water to the highlighted areas. Try press and hold mode after each application.

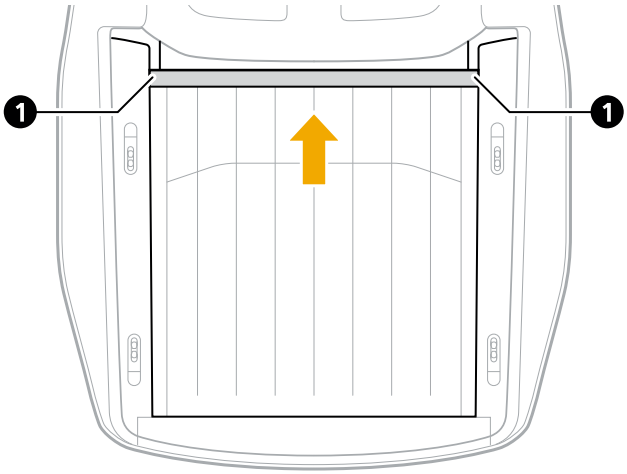

Item	Description
1	Apply deicer to target trim interfaces and inner corners.

Powered Tonneau Cover is Extended

1. Use deicer and warm water to clear ice and debris, being careful not to scratch the slats.
2. Try to retract the tonneau cover with a single button press five times.
3. Try the press and hold mode.
4. Extend and retract the tonneau cover two or three times to be sure that all of the ice has been cleared.

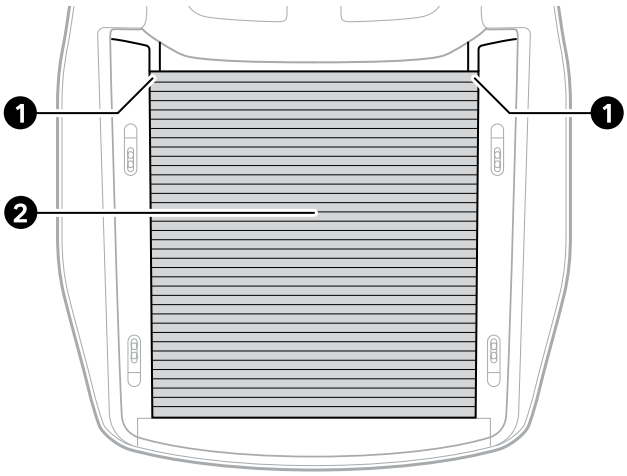

Item	Description
1	Target flushing the inner corners.
2	Also clear off all slats.

NOTE
If using water and freezing temperatures still exist, don't leave the tonneau cover in a fully retracted state.

Other Accessories

About Other Accessories

To find information about Rivian vehicle accessories and gear not documented in this guide:

- Visit rivian.com.
- Visit the Gear Shop.
- Visit rivian.com/support to download guides.

Service and Maintenance

Exterior Cleaning

Car Wash Mode

Car Wash mode is a setting that you can turn on from the center display through Quick Controls. When Car Wash mode is on, the climate system defaults to Air Recirculation to close outer vents and prevent water and suds from entering the vehicle. Car Wash mode does the following:

- Rolls up all windows
- Closes the door handles
- Closes the charge port door if the vehicle isn't charging
- Mutes parking sensor alert chimes
- Prevents the automatic windshield wipers from activating
- Suppresses the automatic switching between Day and Night themes
- Suppresses passive entry

NOTES

- Always ensure the DC charge port cover on a Model Year 2022-2025 vehicle is closed before turning on Car Wash Mode.

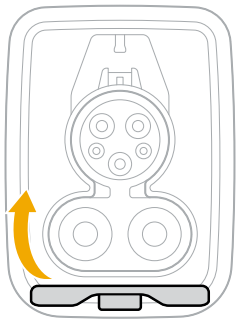

- When the vehicle is in Car Wash mode, the exterior door handles will present if you unlock the vehicle with an exterior key.
- To open an unlocked door if the handles aren't presenting, push on the indent on the door handle.

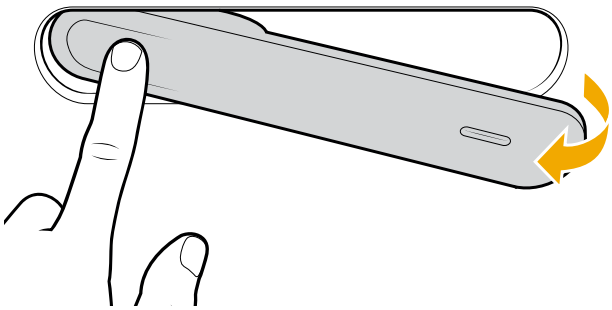

IMPORTANT

The vehicle speed must be below 12 mph (19 km/h) to enable Car Wash mode.

Commercial Car Wash

You can use standard car wash services to clean the vehicle. Ensure that you observe any rules posted by the car wash, and that the vehicle's windows are fully up and side mirrors are folded in before entering the car wash. If you haven't turned on Car Wash mode, lock the vehicle to prevent the charge port door from opening.

For "touchless" car washes where you're not required to drive on a rail, put the vehicle in **P** (Park).

For car washes where you're required to drive on a rail, do the following:

1. From a **P** (Park) position, turn on Car Wash mode.

   IMPORTANT
   If Vehicle Hold engages while in **N** (Neutral), press the brake pedal to release Hold.

2. Put the vehicle in **N** (Neutral) by using the drive stalk or choosing the on-screen button to Shift To Neutral.

CAUTION
When Car Wash mode is on and you are in **N** (Neutral), your vehicle will stay in **N** (Neutral) even if you leave the driver seat. The vehicle will not go into Hold or **P** (Park). Be cautious when using Car Wash mode in **N** (Neutral), and only use this mode on flat ground to prevent the vehicle from rolling.

Hand Wash and Wax

To maintain the paint and coating on your vehicle, wash it before excessive dirt builds up. Roll up all windows and close and lock all doors. Don't use hot water, and don't wash the vehicle in direct sunlight.

CAUTION

Don't wash, wax, or coat the windshield with products containing water repellent. These products can affect rain detection, preventing the automatic wiper function from working correctly.

Hand Wash

DANGER

- Before you wash the vehicle, ensure that the vehicle is not currently charging. Washing the vehicle while it charges creates an electrocution risk, which can lead to injuries as well as vehicle and property damage.
- Avoid spraying water at any electronics or exposed cabling.

NOTE

You may have configured your User Profile setting that's linked to the Rivian mobile app. If you haven't turned on Car Wash mode, you can turn off *Bluetooth*® on your phone to prevent the handles and charge port door from potentially opening mid-wash.

You can use a hose or a standard pressure washer to wash the vehicle. Use a side-to-side sweeping motion to avoid prolonged concentrated pressure to a single area.

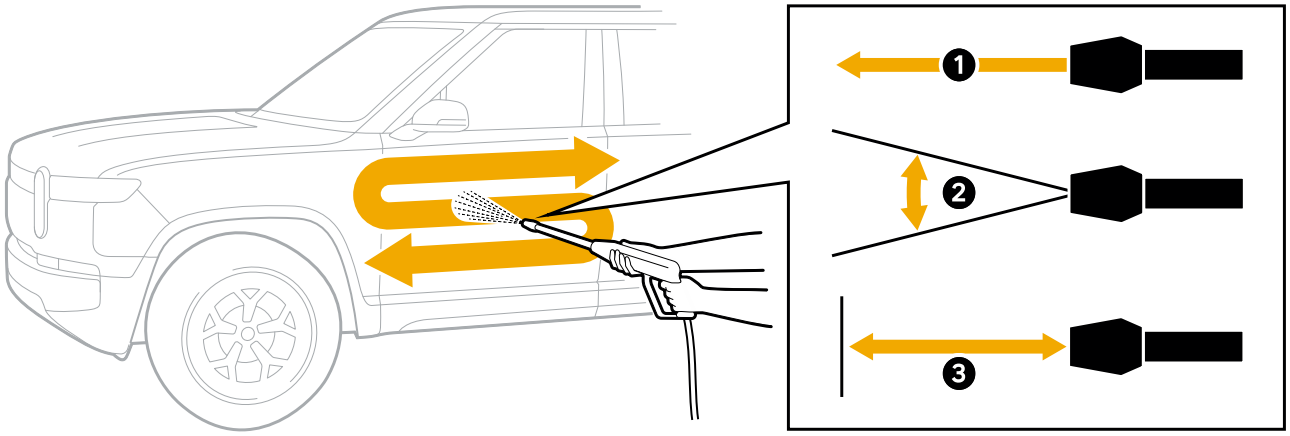

Item	Description	Value
1	Spray pressure	Maximum 1,100 psi
2	Spray angle	Minimum 25 degrees
3	Spray distance	Minimum 15 in (40 cm)

1. Rinse the vehicle thoroughly with a hose to wash away dirt and debris.
2. Remove leaves and other obstructions from the air intake cover to keep the heating and air conditioning systems running efficiently. The air intake cover looks like vents, and you can find it under the hood near the front windshield. You can occasionally remove the air intake cover to wash it more thoroughly with a hose and sponge.

CAUTION

- When the front trunk is open, don't direct a pressure washer or hose with a high water flow rate to the air intake cover. This may lead to degraded performance of the climate system.
- Repeated saturation of the air intake cover can affect the durability of the air filter, which is located below the air intake cover.
- The front trunk can be vacuum-cleaned or scrubbed with a soft, damp cloth.

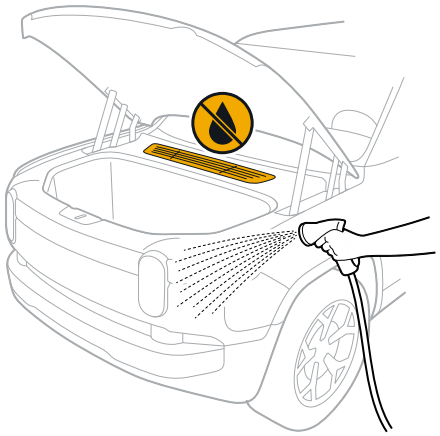

3. Use only detergent formulated for washing cars and a soft sponge to gently scrub away surface stains.
4. Soap and rinse sections of the vehicle at a time to prevent soap scum.
5. To prevent corrosion, flush the vehicle's underbody, fenders, brakes, and wheel wells with water to remove road buildup.

NOTE

Underbody washing is especially effective right after an off-road adventure through sand, salt, mud, or de-icer.

6. Dry the vehicle with a chamois or soft cloth.
7. Clean the windows and mirrors with a glass cleaner and soft cloth.
8. You can optionally drive around the block and apply the brakes in a normal fashion to properly dry them out after a wash.

Hand Wax

While exterior coatings such as wax or ceramic aren't required, you can occasionally apply additional exterior coating to further protect the paint and prolong the new look of your vehicle. This also allows easier maintenance washing. Always apply exterior coatings when the vehicle is clean, dry, and cool. Never apply in direct sunlight.

Exterior Speakers

The pedestrian audio alert feature emits a sound to help alert pedestrians about your moving vehicle. The speakers that emit the sound are located underneath the front and rear bumpers of the vehicle. Keep these speakers clean and free of obstructions.

IMPORTANT

- If you notice decreased volume with your vehicle's courtesy or alert sounds, you may need to use a tube brush to gently clean the speakers.
- Clean sound ports after severe weather that causes debris buildup or adventures that include driving off road or across water.

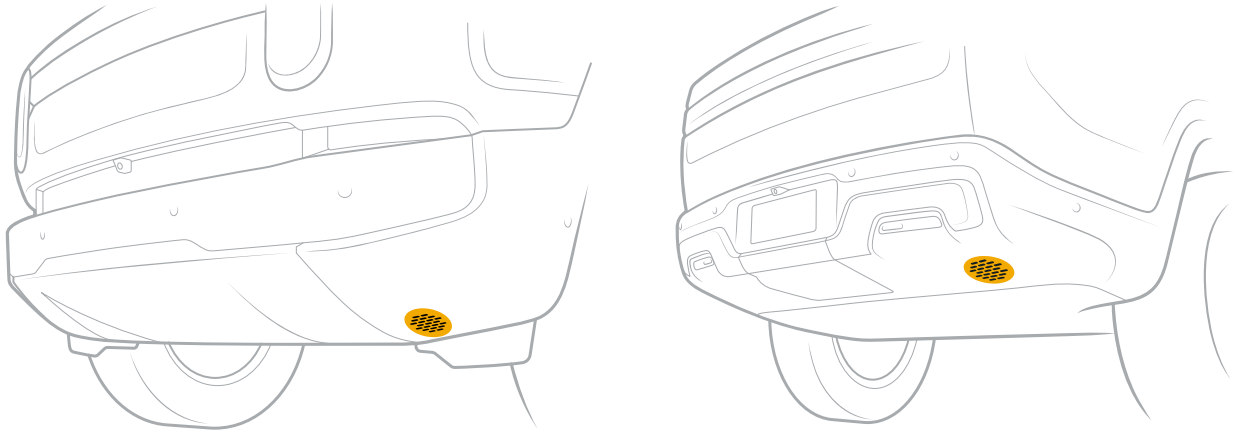

Clean the Road Wheel

If your vehicle is equipped with the 22 inch road wheel and aerodynamic wheel covers, you can remove the aerodynamic wheel covers to clean the wheel and covers.

WARNING

Mud and rocks can be trapped between the wheel cover and the wheel, causing noise and wheel imbalance.

1. Put your hand into the valve stem opening of the wheel cover and pull the cover away from the wheel.

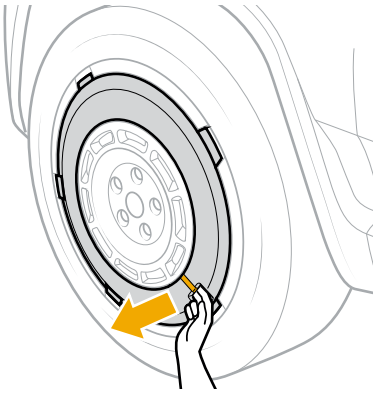

2. Put your hand under the closest tab and pull up firmly. Move to the next tab, pull up on the cover, and continue around the wheel until the cover is removed.

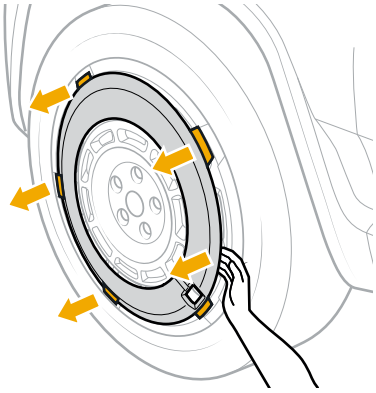

3. To reinstall the aerodynamic wheel cover, place the cover on the wheel and press firmly to secure it.

   NOTE

   Be sure to press between the tabs, not on them.

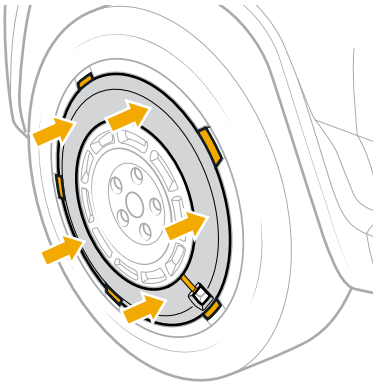

Clean the Wheels and Install the Covers

1. Clean the wheel with a hose or pressure washer as described in Exterior Cleaning.
2. When the wheel is clean, reinstall the cover on the wheel as shown in step 3 above.

Clean the Charge Port

If light debris such as dust, sand, dirt, or water enters the charge port, gently clean it out before starting a charge session.

DANGER

Don't attempt to clean the charge port if the vehicle shows any signs of electrical, battery, or high-voltage issues. Contact Rivian.

DANGER

For Model Year 2026 and later vehicles: The NACS charge port contains hollow charging pins. Don't insert anything into the charging pins or attempt to clean inside of the charging pins. Doing so could cause you injury and damage the charge port.

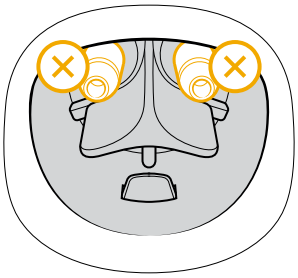

CAUTION

Don't use liquid cleaners, sprays, or any cleaners that may leave residue to clean any part of the charge port (including inside of the charge port, the area surrounding the charge port, and the charge port door). These products can cause corrosion and damage to the charging pins.

- Use a slightly damp, lint-free cloth to wipe away any light debris on the charge port door or the area surrounding the charge port.
- Use compressed air to gently clear out any light debris inside of the charge port.
- Use a lint-free cloth or cotton swab with 99% isopropyl alcohol to wipe away any light debris around the charging pins.

CAUTION

- Contact Rivian if any debris is stuck or does not fully clear out with gentle cleaning.
- Contact Rivian if you can't charge the vehicle for any reason after cleaning the charge port.

Interior Cleaning

Surfaces

CAUTION

- Don't use bleach, ammonia, silicone, or any other harsh cleaners. These products can cause damage to the vehicle interior.
- Don't use cleaners, sealants, or conditioners that contain wax or petroleum.
- While cleaning beneath the front passenger seat, don't remove the cover from the AC/DC inverter. The cover protects the inverter from contamination, such as accidental spills.

To maintain the interior of your vehicle, clean it periodically, as needed.

- Remove trash and debris.
- Remove the floor mats and vacuum the floors and seats.
- Vacuum the floor mats and return them to the vehicle.
- Wipe the rearview mirror with a dry microfiber cloth.
- Clean the interior windows and windshield with a microfiber cloth dampened with an ammonia-free window cleaner. For tinted windows, make sure the cleaner is safe to use on them.
- Wipe the seats, interior surfaces, and speaker grills with a damp cloth.
- Turn off climate controls while cleaning around the vents and dashboard.

NOTE

Lightly dampen or spray the cloth with water or a cleaner developed for the seat material and dashboard. Don't spray cleaner or pour liquid directly onto the vehicle's surfaces, and don't soak the cloth with cleaning solution.

Display Screens

To clean the driver, center, and rear display screens, do the following:

1. Choose **Settings** ⚙ **> Displays > Screen clean** and choose **Start cleaning**. This disables the displays.
2. Wipe the screens with a microfiber cloth.
3. Press and hold **Done** for 3 seconds to immediately cancel Screen Clean; otherwise, Screen Clean automatically cancels after 5 minutes, and the displays become active again.

> **NOTE**
> Shifting the vehicle out of **P** (Park) also cancels Screen Clean.

Floor Mats

DANGER

Improperly installed floor mats can interfere with the brake or accelerator pedal while you're driving and can result in loss of vehicle control.

- Only use floor mats designed for your specific vehicle. Never use floors mats designed for other models or different model-year vehicles, even if they're genuine Rivian floor mats.
- Ensure that the floor mats are properly secured to the floor. This keeps the mats in place so that they don't slide or lift up from the corners while you drive. Floor mats should be periodically inspected to ensure that they're properly installed.
- Only one floor mat should be installed in each position. Never stack floor mats on top of each other (for example, never stack all-weather floor mats on top of a carpeted floor mat).
- Install floor mats with the correct side facing up. Never install floor mats upside-down or bottom-side up.
- Perform this safety test following new floor mat installation. Before driving, and when the vehicle is in **P** (Park), fully depress each pedal to the floor to ensure that the floor mat doesn't interfere with the brake or accelerator pedal.
- Failure to follow these warnings can result in a collision, property damage, serious injury, or death.

DANGER

Floor mats for model years 2022-2024 can potentially interfere with the accelerator pedal when installed on a 2025 or newer vehicle. Don't install 2022-2024 floor mats on a 2025 or newer vehicle.

Floor mats attach to the floor with push tabs. Front mats have one push tab at each bottom corner. Rear mats have three push tabs along the side.

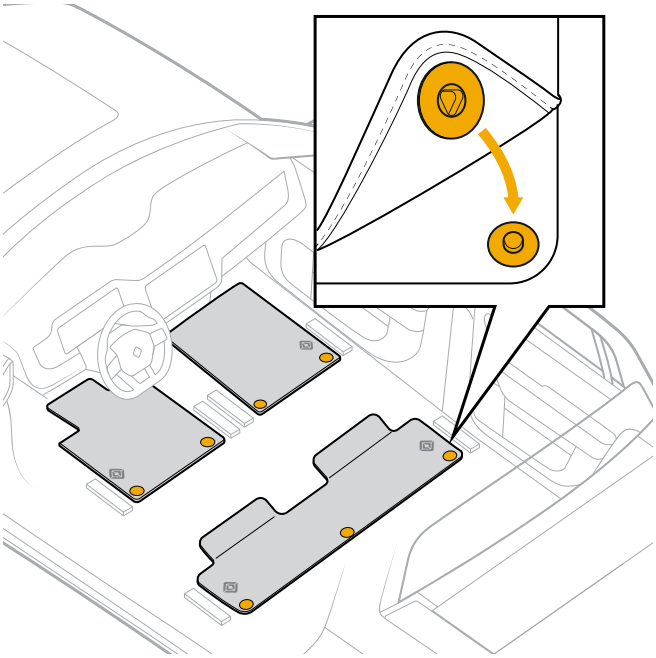

Remove the Floor Mats

1. Pull up firmly on a section of the floor mat close to a push tab.
2. Remove one push tab at a time.

Attach the Floor Mats

1. Align the floor mats with the push tabs on the floor. Ensure that the push tabs are above the corresponding tabs.
2. Press firmly to click the push tabs into place one at a time.

Clean the Floor Mats

Shake or vacuum the floor mats to remove any debris. Floor mats can be washed with water and common cleaning solutions such as mild soap or carpet stain remover.

Cold Weather Care

Surfaces

If your vehicle is iced over, only use the climate control system, such as heat and window defrost, to thaw surfaces.

In below freezing conditions, it's possible for the door handles to freeze and not present during unlock. To unfreeze and open a handle, press in on the rearward end of it a few times until it "breaks" the ice and opens.

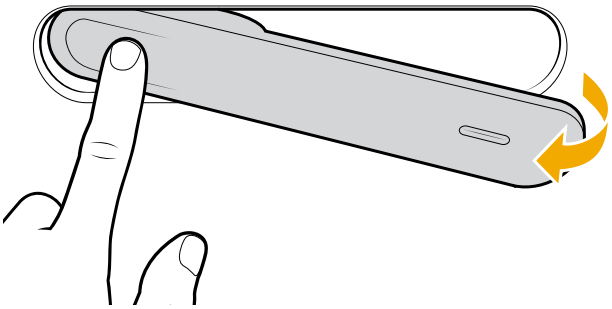

CAUTION

- Don't pour hot water onto any glass surface to thaw the glass. This may cause the glass to crack.
- Don't use an ice scraper on plastic parts on the vehicle's exterior, such as the air intake cover and the trim near the windshield wipers. This may scratch or damage the plastic and nearby fixtures.
- In cold weather, clear the windshield of any snow and ice, and fully defrost it before you turn on the wipers. If the wipers are frozen to the windshield, this could cause damage to the wiper motor.
- Don't wax, wash, or coat the windshield with products containing water repellent. These products can affect rain detection, preventing the Auto wiper function from working correctly.

Lights

Use warm water and a soft cloth to remove snow and ice from the lights on the outside of the vehicle. You can also use a commercial deicer according to the product instructions.

CAUTION

Wipe the lights gently. Ice scrapers, snow brooms, and dirt or debris below the snow or ice may scratch the lens surface.

NOTE

When the lights are clean and dry, you can apply a ceramic or automotive hydrophobic coating to minimize ice buildup. Follow the product instructions. Coatings may impact lens opacity and light performance.

Routine Maintenance

About Vehicle Maintenance

Rivian recommends vehicle maintenance every 9,000 mi (15,000 km). Contact Rivian or see rivian.com/support/service for maintenance information.

Windshield Washer Fluid

Seasonality and Temperature Rating

When you refill windshield washer fluid, use fluid rated for the season and temperature range where the vehicle is located. Ensure that you dilute concentrated formulas. Always refer to the temperature rating and instructions on the fluid bottle before you purchase or use windshield washer fluid.

IMPORTANT

Windshield washer fluid ratings vary. Cold weather–rated fluid performs best in colder temperatures, but is unnecessary in milder temperatures.

Windshield washer fluid rated for milder temperatures typically contains much lower levels of volatile organic compounds (VOCs). VOCs contribute to ozone levels and smog, particularly when VOCs evaporate in warmer temperatures. Use of cold weather–rated fluid when the temperature is warmer can release higher levels of VOCs into the air. To avoid releasing excess VOCs, use fluid rated for your current season and temperature.

Refill Windshield Washer Fluid

DANGER

Concentrated windshield washer fluid is highly flammable and may ignite if exposed to heat.

Don't pour or spill concentrated windshield washer fluid onto hot vehicle components or other areas that could heat the concentrated fluid.

WARNING

After driving, vehicle components may be hot.

Before touching any area of the vehicle, ensure the area is cool to the touch. Don't pour any fluid into a hot area of the vehicle.

IMPORTANT

Some windshield washer fluid must be diluted. Follow the manufacturer's instructions on the bottle.

Dilute the fluid in a separate container. Don't attempt to dilute fluid inside the vehicle reservoir.

Refill the windshield washer fluid when it gets low.

1. Park the vehicle on a level surface. Ensure the vehicle is off.
2. Open the hood. Locate the reservoir cap.
3. Pry up the cap to access the opening.
4. Pour in windshield wiper fluid until the foam float rises up or you see the reservoir is full.
5. Replace the cap and press firmly to secure.

Replace Wiper Blades

Wiper Location	Wiper Size
Front driver side	24 in (600 mm)
Front passenger side	18 in (450 mm)

1. Ensure the front wipers are **Off** and the vehicle is in **P** (Park).
2. Go to **Settings** ⚙ **> Maintenance**.
3. Enable **Wiper service** to move the wipers out of the wiper park position.
4. Bend the wiper arms at the hinge as needed.
5. Remove the old wiper blades and replace with J-hook hybrid blades. Set the new blades on the windshield.

WARNING

To prevent damage to the vehicle's hood, position both wiper blades on the windshield before exiting wiper service mode.

6. Disable **Wiper service** from the center display to return the wipers to the wiper park position.

NOTE

While the vehicle is in wiper service mode, the powered opening of the front trunk is disabled to prevent potential contact between the wiper blade arms and the hood. You can still unlatch the trunk when requested, but it won't power open.

Replace the Key Fob Battery

If your key fob battery charge is low, you'll see a "Low battery" or "Change battery" indicator under **Settings** ⚙ **> Drivers and Keys** in the center display. Follow the steps below to replace the key fob battery.

Remove the Key Fob Cover

1. Hold the key fob so the Rivian logo faces you.
2. Press the release button, and then pull up on the carabiner hook and turn it to expose the slot at the top of the key fob.

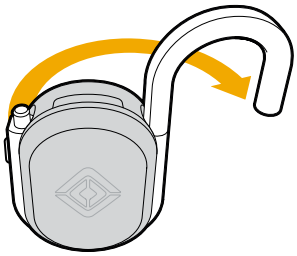

3. Insert a coin in the slot at the top of the fob.
4. Gently pry the cover off the key fob by pushing the coin away from you.

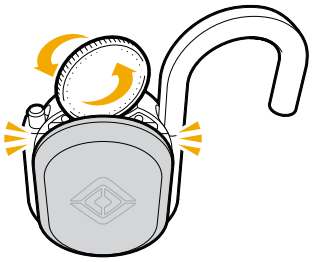

5. Carefully remove the cover to avoid damaging the tabs.

Remove and Replace the Battery

1. Remove the coin cell battery from the holder.
2. Insert a new CR2477 coin cell battery in the battery holder.

NOTES

- Recycle used coin cell batteries at a battery recycling center or dispose in accordance with local laws.
- Key fob environmental storage and operating conditions are -22 to +122°F (-30 to +50°C).
- The ISO7000-1641 operator's manual symbol 📖 is printed inside the key fob.

DANGER

- The key fob contains a coin cell battery.
- Batteries can present chemical burn hazards. If swallowed, batteries can cause severe internal burns within two hours, which can lead to death.
- Keep new and used batteries away from children.
- If a battery may have been swallowed or placed inside any part of the body, seek immediate medical attention.

Reinstall the Key Fob Cover

1. Ensure the O-ring is installed in the key fob cover.

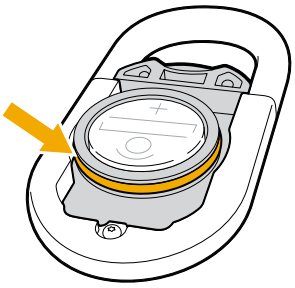

2. There are two tabs on the bottom of the cover. Install the two bottom tabs first and then snap the top tab into the key fob.
3. Press to seal the cover.

WARNING

If the key fob doesn't close securely, stop using the product and keep it away from children. Contact Rivian for a replacement.

Replace the Cabin Air Filter

IMPORTANT
Ensure climate controls are turned off.

1. Open the hood.
2. Remove the air intake cover. Pull it up gently to release the clips.

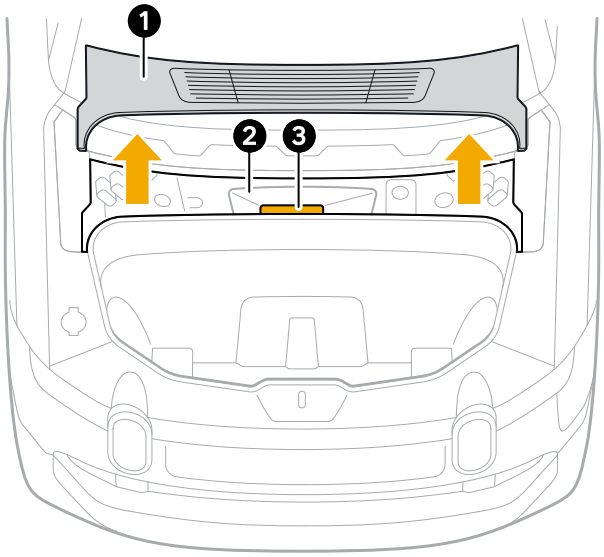

Item	Description
1	Air intake cover
2	Air intake duct
3	Air filter

3. Locate the air filter in the air intake duct. Remove any leaves or debris if present.

4. Pull the tab to release the air filter holder.

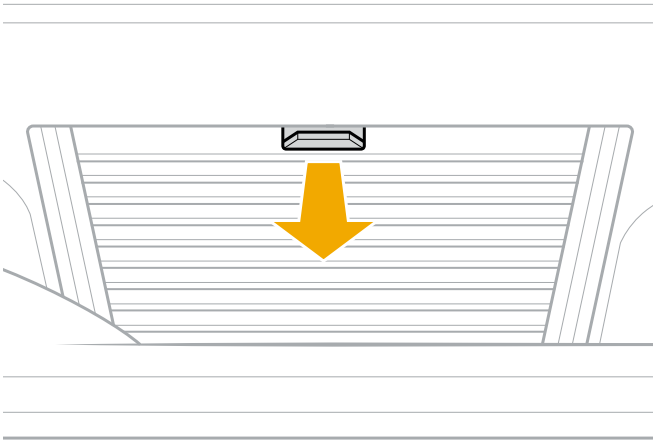

5. Remove the air filter from the holder. Remove any leaves or debris if present.

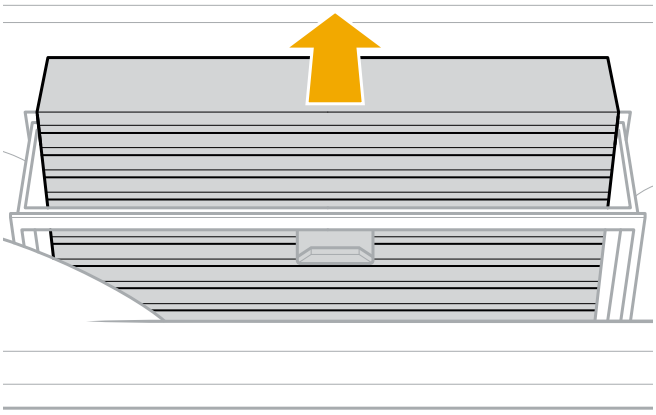

6. Replace the air filter in the holder. Ensure the airflow arrows point towards the cabin.
7. Push the air filter holder into its original position.
8. Replace the air intake cover. Push down to secure the clips.

Refrigerant System

DANGER

- R-1234yf refrigerant is mildly flammable and under high pressure. The climate system should only be serviced by a trained and certified technician for safety and proper operation. Failure to do so can result in serious injury or death.
- When replacing refrigerant and compressor oil, the correct type and amount must be used.
- All refrigerants should only be reclaimed with proper equipment to avoid injury. Refrigerant should never be vented to the atmosphere as it is harmful to individuals and the environment.
- Only a new evaporator or inner condenser should be used as a replacement for leaking evaporator or inner condenser (if equipped). A damaged or leaking air conditioning evaporator or inner condenser should never be repaired or replaced with the one removed from a salvaged vehicle.
- Refer to Society of Automotive Engineers/SAE Standard J2845 for more information.

Your vehicle is equipped with R-1234yf refrigerant. The required refrigerant type and charge amount are listed on the Refrigerant label under the hood of the front trunk.

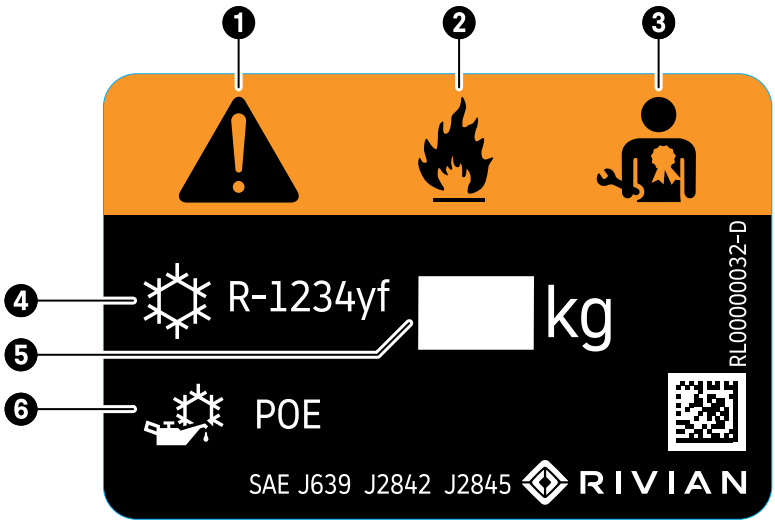

The symbols and specifications on the refrigerant label are as follows.

Item	Description
1	Caution
2	Flammable refrigerant
3	Requires registered technician to service
4	Refrigerant type
5	Refrigerant amount
6	Refrigerant system lubricant type

Rotate Tires

Rivian recommends the following for vehicles with square fitments (same size wheels and tires in all positions):

- Rotate the tires every 9,000 mi (15,000 km) to ensure even tread wear and extend tire life.
- Use a four-tire rotation to ensure that your spare tire (if equipped) is in excellent condition.
  1. Move the rear tires to the same sides on the front.
  2. Move the front tires to the opposite sides on the rear.

> **NOTE**
> Vehicles with staggered fitments (different front and rear tire sizes) can be rotated side-to-side (left-to-right) but not front-to-back. Side-to-side rotation can increase tread life by changing the direction of rotation for each tire and balancing shoulder wear.

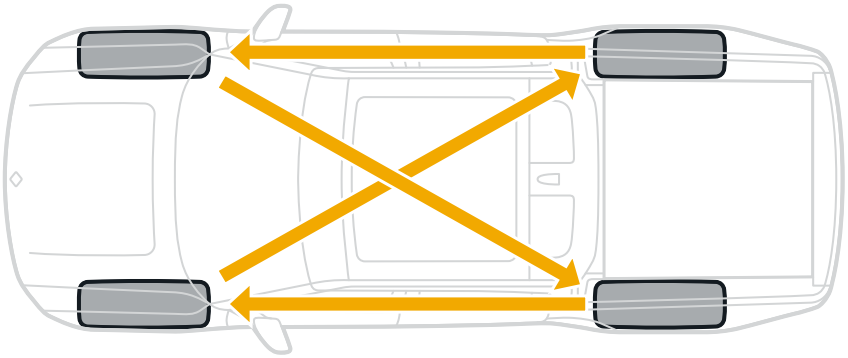

Use the Rivian mobile app or contact Rivian to schedule service.

When you rotate your tires, you can update the vehicle using the center display.

To extend the life of your tires, in addition to regular tire rotations:

- Keep tires inflated to recommended pressures.
- Observe posted speed limits.
- Limit fast starts, quick turns, and hard acceleration.
- Reduce speed and increase following distance to avoid heavy braking.
- Avoid hitting curbs, potholes, or objects in the road.
- Don't overload the tires. See Steps for Determining the Correct Load Limit.
- Don't clean or contaminate tires with fluids that can cause damage.

Replace Tires

For safety and maximum tire performance, replace your tires when they become worn. Driving with worn tires substantially increases the risk of an accident in reduced traction conditions, such as rain or snow.

Tire wear reduces the tread depth. Your vehicle's tires are equipped with tread wear indicators at 2/32 in (1.6 mm).

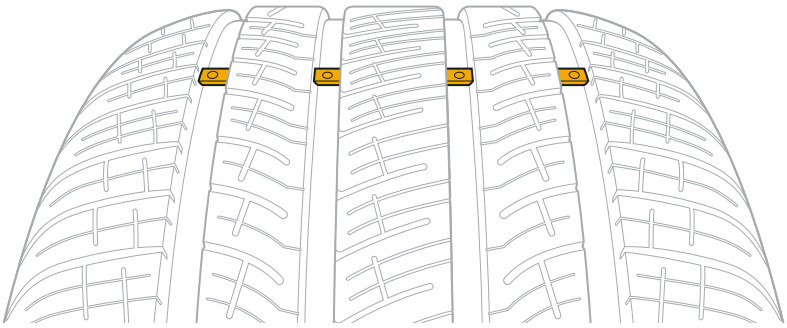

For safety, inspect your tires regularly and replace them before the tread wear indicators appear at the surface as a solid line.

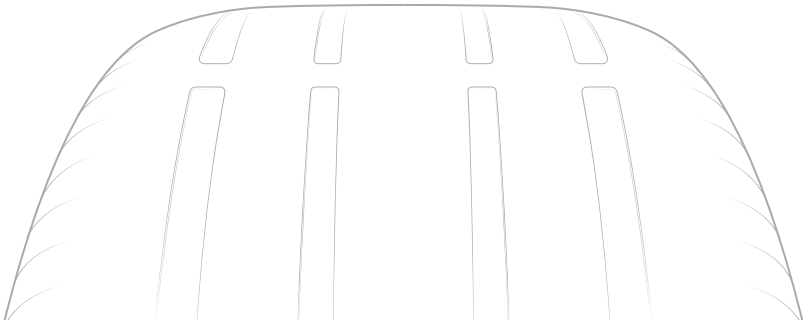

Always keep your tires properly inflated for even tread wear and maximum traction.

Be sure to rotate your tires every 9,000 mi (15,000 km) to ensure even tread wear and to extend tire life.

When you change the wheels or tires on your vehicle, you can update the vehicle using the center display.

IMPORTANT

Rivian recommends that the tire tread depth difference between the left and right tires on each axle not exceed 2/32 in (1.6 mm) maximum. If the difference exceeds the maximum, you may be required to replace both tires on the same axle at the same time. If you're replacing only the front tires, and all tires on the vehicle have the same dimensions, move the rear ones forward, and install new tires on the rear axle. When replacing a tire with a staggered setup (different tire sizes on each axle), ensure that the replacement tire matches the correct specification for that axle.

Follow your local regulations for tread wear limits.

Tires should be replaced six years after their date of manufacture due to aging and degradation (regardless of tread depth). Check the US DOT tire identification number on the tire marking. The last four numbers indicate the date the tire was manufactured. The first two numbers are the calendar week and the last two are the year.

Tire Change

About Tire Change

DANGER

To avoid damage to the vehicle and injury to people nearby, follow these safety precautions when you change a tire.

- Find a safe location and ensure the surface is flat, firm, and high-friction.
- Don't service the vehicle on a narrow shoulder, near oncoming traffic, or on soft terrain.
- Don't place the tire jack over a grate or manhole cover.
- Don't place supports such as wooden blocks under the tire jack.

CAUTION

- The Rivian Tire Service Kit should only be used for roadside emergencies to change a flat or damaged tire on a Rivian vehicle. Contact Rivian for other types of service or repair.
- The Rivian Tire Service Kit is designed to lift a Rivian vehicle using the vehicle jack points only. Don't lift any other vehicle or cargo using the Rivian Tire Service Kit.

IMPORTANT

Rivian recommends that the tire tread depth difference between the left and right tires on each axle not exceed 2/32 in (1.6 mm) maximum. If the difference exceeds the maximum, then you may be required to replace both tires on the same axle at the same time. Follow your local regulations for tread wear limits.

Install only the tire brands and models recommended by Rivian. Use the same tire model on either axle. For optimal performance, use the same tire model on all four wheels.

Failure to fulfill all of the aforementioned requirements may result in changes to vehicle ride, handling, traction, and range.

NOTES

- The full-size spare tire, compact spare tire, and tire service kit are optional items and must be purchased separately.
- You may be able to seal a flat tire as a temporary repair.

Follow these steps in order to change a tire.

1. Prepare the Vehicle
2. Prepare the Spare Tire
3. Lift the Vehicle with the Tire Service Kit
4. Remove and Replace the Wheel

Prepare the Vehicle

1. Find a safe, level location.
2. Go to **Drive Modes** . Choose **All-Purpose** , and then choose **Standard** under **Ride Height**.
3. Put the vehicle in **P** (Park).
4. Press the **Hazard Lights** button on the overhead console to turn on the hazard lights.
5. Ensure all passengers exit the vehicle and stay in a safe location.
6. Continue to Prepare the Spare Tire.

Prepare the Spare Tire

1. Access the spare tire compartment in the truck bed.

   a. Ensure that the truck bed is empty, and that there aren't any objects on the spare tire compartment lid.

   > **NOTE**
   > Unlock and remove the rear Cargo Crossbar if needed.

   b. Open the tailgate.

   c. Lift the release lever to open the spare tire compartment lid.

   d. Push the spare tire compartment lid to a vertical position to remove or replace the spare tire.

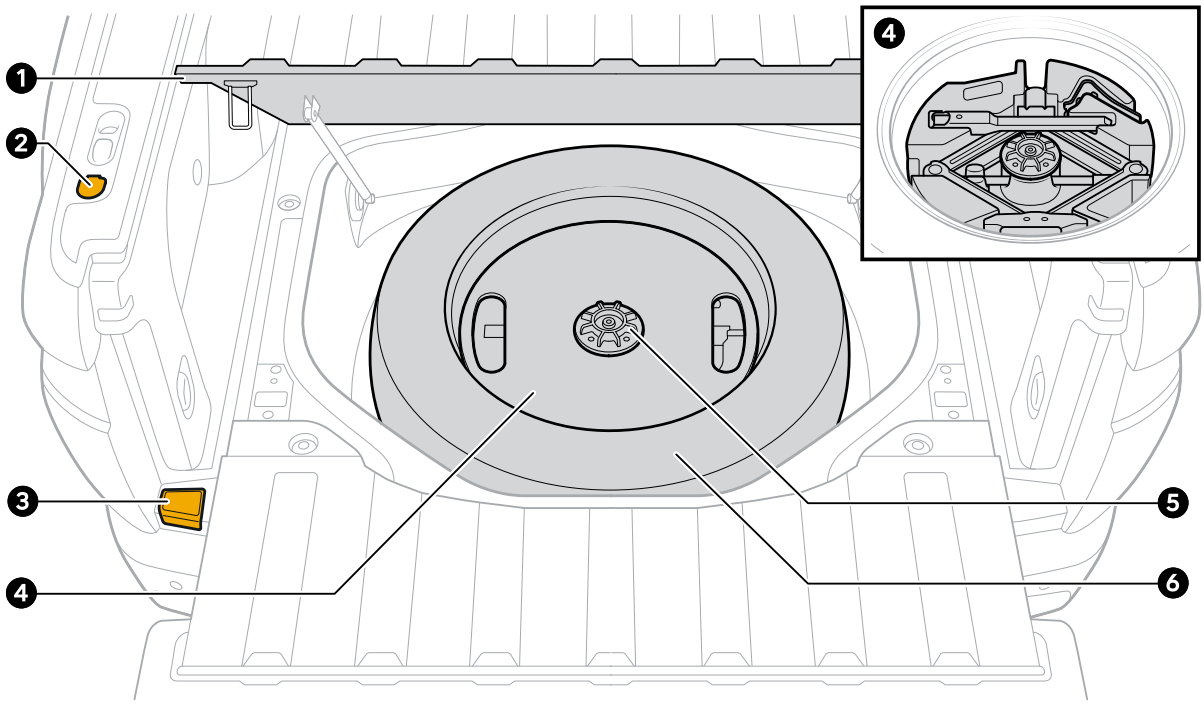

Item	Description
1	Spare tire compartment lid
2	Tailgate release button
3	Spare tire compartment release lever
4	Tire service kit (includes tire jack and tools)
5	Spare tire wing nut
6	Spare tire

2. Remove the tire service kit from the spare tire.
   a. Unfasten the spare tire wing nut and remove the tire service kit.
   b. Use the hex hole on the spare tire wing nut to unscrew and remove the tire service kit retention rod.
   c. Save the wing nut and retention rod for reinstallation.

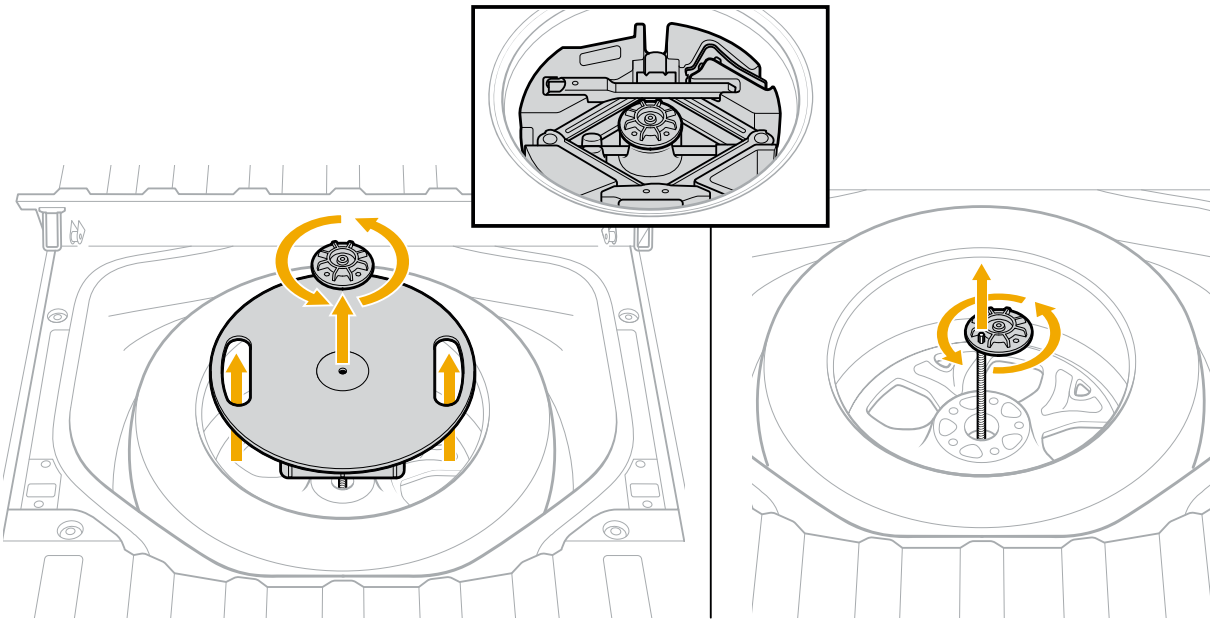

3. Remove the spare tire.

CAUTION

Inflate the compact spare tire after you install it on the vehicle. See Remove and Replace a Wheel.

4. If you're using the full-size spare tire, inflate the tire to the recommended pressure (listed on the Tire and Loading Information label on the driver door pillar).
5. Continue to Lift the Vehicle with the Tire Service Kit.

DANGER

When mounted on the rear axle, the 22" Super Sport full-size spare is only intended for use in roadside emergencies. Replace the full-size spare as soon as possible to avoid handling and stability risks if mounted on the rear axle. When mounted on the front axle, the 22" Super Sport full-size spare may be used as a full replacement tire.

Lift the Vehicle - Tire Service Kit

Mid-2023 (and Later) Version

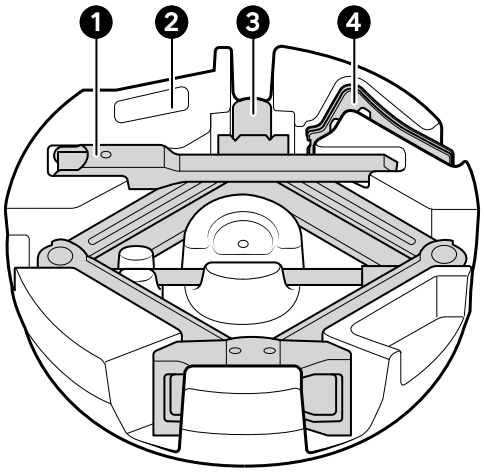

Item	Description
1	Tire jack handle
2	Tire service kit storage tray
3	Tire jack (alignment pin at top)
4	Wheel chocks

1. Go to **Drive Modes** > **All-Terrain** (under **Off-Road** on Performance, Quad, and Tri vehicles). Then choose **Highest** under **Ride Height**.
2. After the suspension has finished adjusting to Highest, go to **Settings** > **Maintenance**. Then turn on **Tire change** mode.

> **NOTE**
> When Tire change mode is on, automatic suspension adjustments pause and ride height can't be changed.

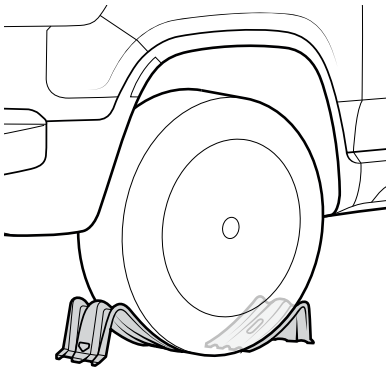

3. Remove the wheel chocks from the storage tray.
4. Secure the vehicle by placing wheel chocks diagonally opposite the tire you're changing.

> **WARNING**
> - The electronic park brake is only on the rear wheels.
> - If you lift a rear wheel, the vehicle may roll.

5. Locate the vehicle jack point closest to the tire you're changing. There is a jack point behind each front tire and in front of each rear tire, near the rocker panel.

> **DANGER**
> To avoid damage to the vehicle and injury to people nearby, only place the tire jack under the vehicle jack point. Don't place the tire jack under other locations.

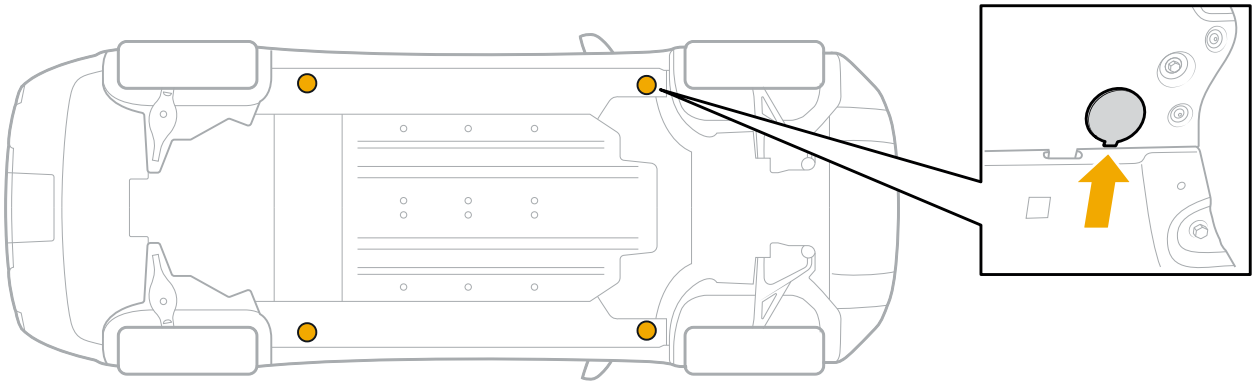

6. Remove the jack point cover by applying force to the inner edge.
7. Remove the tire jack and handle from the storage kit.
8. Position the tire jack under the jack point.

9. Align the top of the tire jack with the hole at the vehicle jack point.

Front

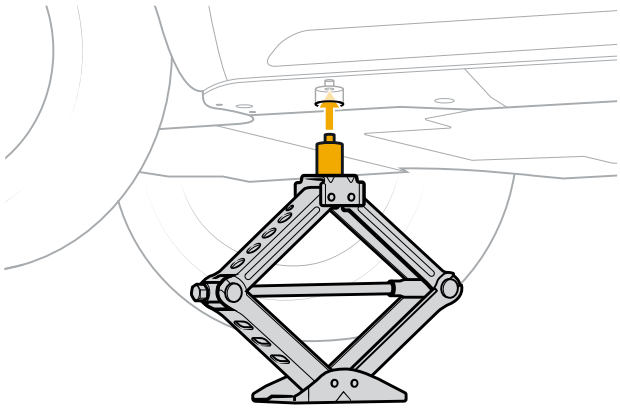

Rear

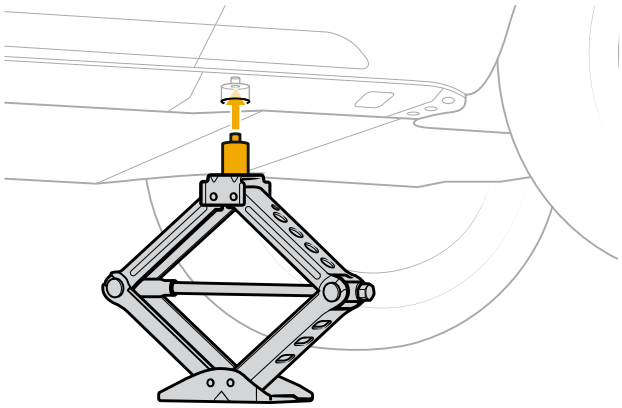

DANGER

To avoid damage to the vehicle and injury to people nearby, ensure that the jack is straight and the pin at the top of the tire jack is level and aligned with the opening in the vehicle jack point. The jack may slip if not aligned and level.

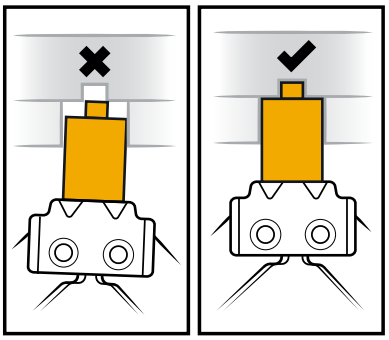

10. Insert the jack handle into the tire jack. Then turn the handle to raise the jack slightly.
11. If the jack begins to tilt, lower the jack. Then reposition the jack rearward approximately 2 in (5 cm) and try again.
12. Continue to Remove and Replace a Wheel.

Remove and Replace a Wheel

DANGER

To avoid damage to the vehicle and injury to people nearby, follow these safety precautions while the vehicle is supported by the tire jack.

- Don't place any part of your body under the vehicle while it's lifted.
- Be cautious around the lifted vehicle and the jack. Don't push or pull against the vehicle. If a wheel is stuck and can't be removed, contact Rivian.

Remove a Wheel

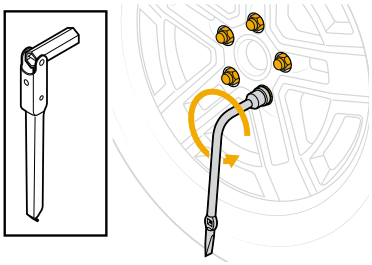

1. Turn on **Tire change** mode and place the tire jack under the jack point. See Lift the Vehicle with the Tire Service Kit.
2. Raise the jack to lift the vehicle slightly, keeping the tire on the ground.
3. Loosen the lug nuts counterclockwise a half-turn with a lug wrench.
4. Raise the jack to lift the vehicle so the tire doesn't touch the ground.
5. Fully loosen and remove the lug nuts.
6. Remove the wheel from the vehicle by gripping the tread of the tire and pulling it straight out.

Install a New Wheel

1. Lift the wheel and align the wheel studs with the holes in the rim.
2. Push the wheel onto the hub. Ensure the wheel is fully seated to the hub.
3. Reinstall the lug nuts and tighten them by hand.
4. Lower the jack until the tire touches the ground but doesn't carry the full weight of the vehicle.

5. Torque the lug nuts in an alternating star pattern to 190 Nm.

NOTES

- If you don't have a torque tool, tighten until the lug nuts can't be turned further.
- The lug nuts are M14 x 1.5.

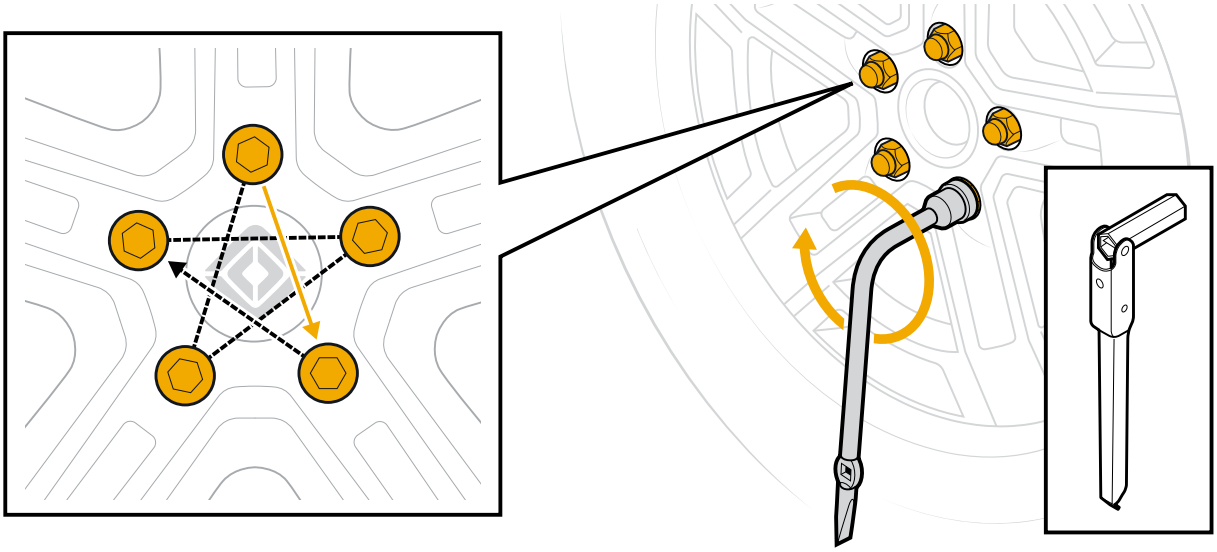

6. Lower the jack until the full weight of the vehicle rests on the tires.
7. Remove the tire service kit and wheel chocks.
8. If you're using the full-size spare tire, swap the center cap from the removed wheel to the new wheel.

Prepare to Drive

1. Go to **Settings** ⚙ **> Maintenance**, and then turn off **Tire change** mode.
2. Update the information under **Wheels and tires** to ensure accurate range estimates and vehicle configuration.
3. Lower the vehicle to improve access to the spare tire compartment. Go to **Drive Modes** . Choose **All-Purpose** /¦\, and then choose **Standard** under **Ride Height**.

   > **NOTE**
   > Ensure the area beneath the vehicle is clear before lowering.

4. Store the removed wheel and the tire service kit in the spare tire compartment in the truck bed.
   a. Place the wheel with the outside of the rim facedown.
   b. Reinstall the tire service kit retention rod.
   c. Replace the tire service kit and secure it with the spare tire wing nut.
5. Choose your previous drive mode and ride height.
6. Drive for up to 10 minutes to allow the Tire Pressure Monitoring System (TPMS) sensors to update the tire pressure values.
7. Repair or replace the removed tire once you've reached your destination.

Wheel and Tire Swap

When you change the wheels or tires on your vehicle, you can update the vehicle using the center display. This allows your vehicle to provide accurate range and efficiency estimates and optimal driving performance and handling. Go to **Settings** ⚙ **> Maintenance > Wheels and tires** on the center display.

You can select and save up to six wheel and tire configurations. You can track total tire mileage and mileage since last rotation, and set rotation reminders.

The Wheels and tires screen shows wheel options that are applicable to your vehicle model year. You can select Rivian or aftermarket tire options. If you choose a Rivian tire, the vehicle automatically updates the corresponding efficiency, range, and stability settings. If you choose an aftermarket tire, there is no direct effect on range and efficiency calculations.

After you confirm your wheel and tire configuration, the vehicle updates and restarts itself. After the restart, the vehicle updates the range number based on your new selection. Additionally, if you have selected new wheels, the three-dimensional rendering reflects the wheels across all screens. You can see the current wheel and tire configuration in your Rivian mobile app, version 2.20.0 or later, under Vehicle Health.

When you turn off Tire Change mode, the vehicle prompts you to enter what work has been completed. Choose one of the following:

- Installed a new set of wheels.
- Installed a new set of tires.
- Rotated your current tires.
- Replaced a flat tire.

Follow the prompts to record the new wheel and tire information.

Record New Wheel and Tire Information Outside of Tire Change Mode

To record a new wheel and tire swap:

1. Go to **Settings** ⚙ **> Maintenance > Wheels and tires** on the center display and choose **Wheel swap**.
2. Choose **New wheels and tires**.
3. Select the new wheels. If you don't see your wheel, select the one that is closest in size.
4. Choose **Next**.
5. Select your tires.
6. Choose **Confirm**.
7. Choose **Confirm** again. The vehicle finalizes the swap and restarts.

> **NOTE**
> The vehicle can't be operated while it restarts, typically for 3 to 5 minutes.

Swap an Existing Wheel and Tire Configuration

1. Go to **Settings** ⚙ **> Maintenance > Wheels and tires** on the center display and choose **Wheel swap**.
2. Identify the wheel and tire configuration you want to swap to and choose **Select**.
3. Choose **Confirm**. The vehicle finalizes the swap and restarts.

Delete an Existing Wheel and Tire Configuration

1. Go to **Settings** ⚙ **> Maintenance > Wheels and tires** on the center display and choose **Wheel swap**.
2. Identify the wheel and tire configuration you wish to delete and choose **Delete**.
3. Choose **Delete** again to remove the wheel and tire configuration and its associated data.

Lift the Vehicle with a Non-Rivian Jack

Before you lift the vehicle, you must remove the underbody panels if you don't have a Rivian-supplied tire jack or if you need to lift multiple tires.

CAUTION

Don't place a jack directly on the underbody panels or the vehicle battery.

IMPORTANT

Use a jack that is rated to lift at least 3 tons with at least 23 in (59 cm) of range.

Prepare to Lift the Vehicle

1. Put the vehicle in **P** (Park).
2. If you're lifting a single tire, secure the vehicle by placing wheel chocks diagonally opposite the tire to be changed.

   WARNING

   - The electronic park brake is only on the rear wheels.
   - If you lift a rear wheel, the vehicle may roll.

3. Go to **Drive Modes** **> All-Terrain** (under **Off-Road** on Quad- and Tri-Motor vehicles). Then choose **Highest** under **Ride Height**.
4. After the suspension has finished adjusting to Highest, go to **Settings** **> Maintenance**. Then turn on **Tire change** mode.

   NOTE

   When Tire change mode is on, automatic suspension adjustments pause and ride height can't be changed.

5. Remove the underbody panels to access the frame rails. See Remove the Front Panels and Remove the Rear Panels.

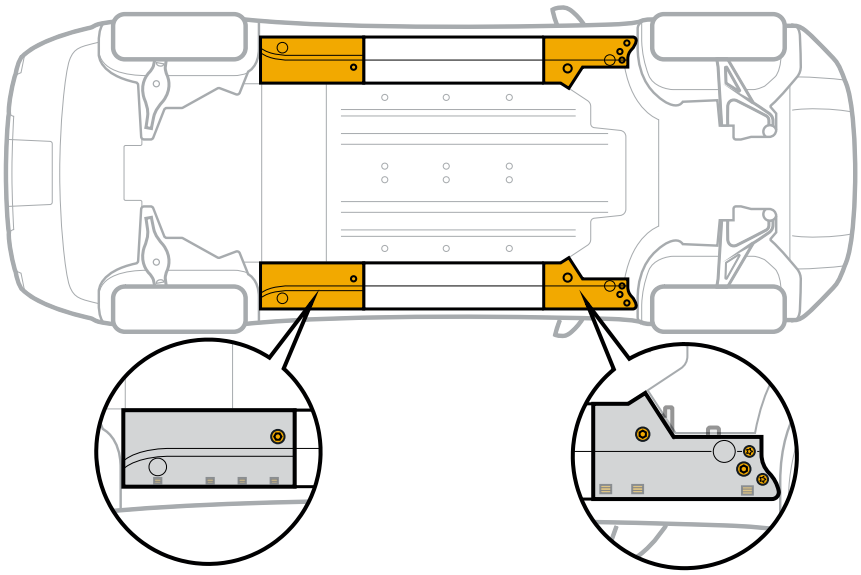

Remove the Front Panels

1. Remove the four bolts on the front panel.
   a. Use a T20 Torx screwdriver to remove the two small bolts.
   b. Use a 10 mm socket to remove the two large bolts.
   c. Save the bolts for reinstallation.
2. Grab the outer edge of the panel and pull down gently to release the clips.

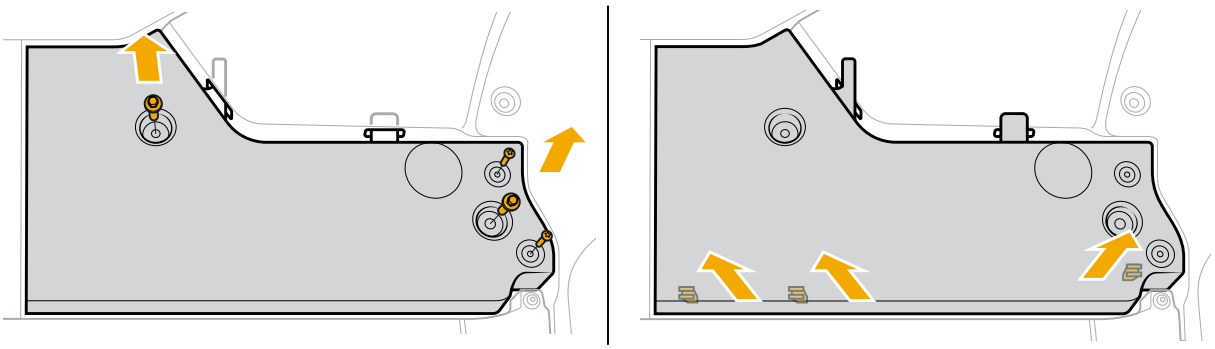

3. Pull down further to remove the panel from the double-sided tape. Save the panel for reinstallation.
4. Repeat for the other front panel as needed.

Remove the Rear Panels

1. Use a 10 mm socket to remove the bolt from the rear panel. Save the bolt for reinstallation.
2. Grab the outer edge of the panel and pull down gently to release the clips.

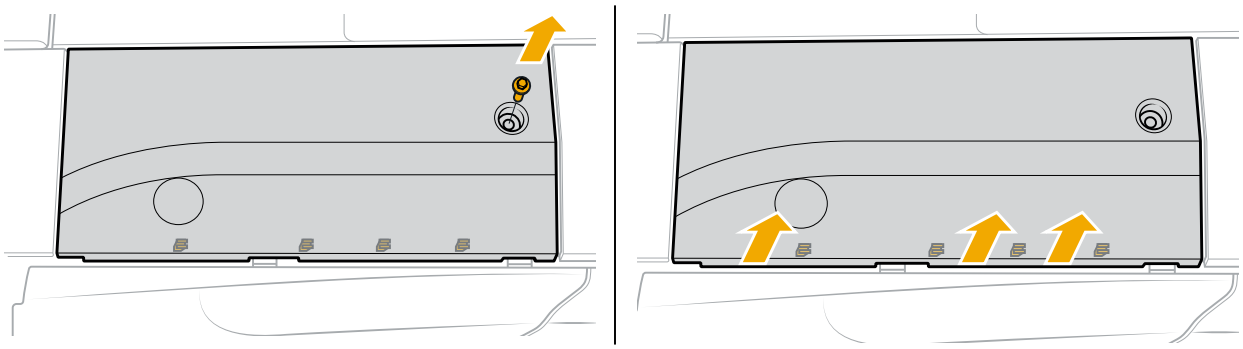

3. Pull down further to remove the panel from the double-sided tape. Save the panel for reinstallation.
4. Repeat for the other rear panel as needed.

Jack and Lift the Vehicle

1. Use a jack that is rated to lift at least 3 tons with at least 23 in (59 cm) of range.
2. Use a rubber pad to protect the underbody finish.
3. Place the jack under the lift point on the frame rail.

   Front

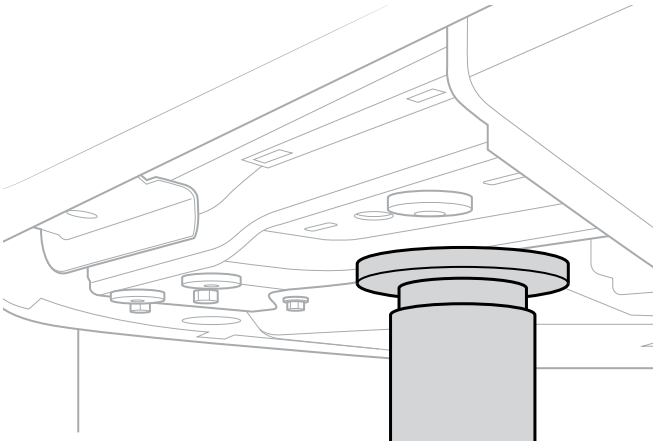

   Rear

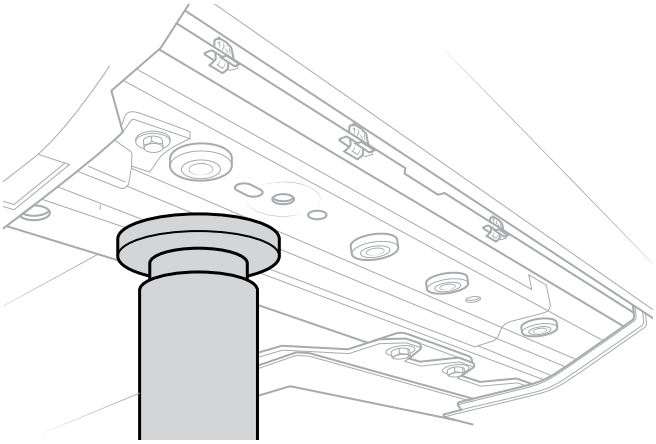

DANGER

Don't place any part of your body under the vehicle while it's lifted.

4. Follow the instructions included with the jack to raise and lower the vehicle.

Reinstall the Panels

1. Clean the frame rail surface with an alcohol swab or wipe to ensure the double-sided tape will adhere.
2. Reinstall the panels.
   a. Align the tabs on the panel to the slots on the vehicle.

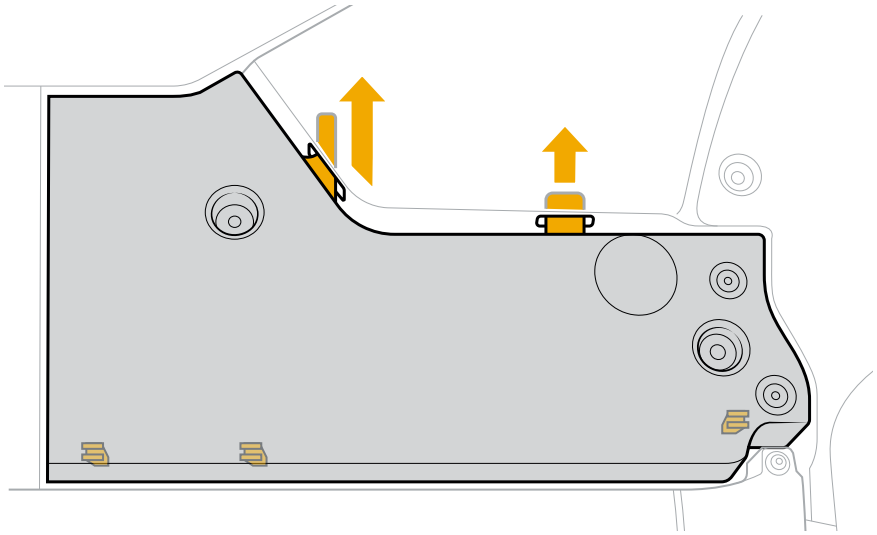

   b. Secure the clips on the panel.

> **NOTE**
> If any clips are broken, contact Rivian to replace the panel. Secure the panel with the remaining clips and bolts until a replacement is available.

   c. Reinstall the large and small bolts on each front panel.
   d. Reinstall the bolt on each rear panel.
3. Go to **Settings** ⚙ **> Maintenance**. Turn off **Tire change** mode.
4. Choose your previous drive mode and ride height.

Flat Tire Repair

Seal a Flat Tire

WARNING

Don't service the vehicle on uneven or soft terrain, on a narrow shoulder, or near oncoming traffic.

CAUTION

- Use the Rivian-supplied tire mobility kit for roadside emergencies only. After using the tire mobility kit to temporarily fix a flat tire, repair or replace the tire as soon as possible.
- Tire sealant only repairs holes in tire tread. If a hole appears in any other part of the tire, such as the sidewall, or exceeds 0.25 in (6 mm) in diameter, repair or replace the tire.

Tire Mobility Kit

To seal a hole in a flat tire using the tire mobility kit:

1. Find a safe, level location and put the vehicle in **P** (Park).
2. Press the **Hazard Lights** button on the overhead console to turn on the hazard lights.
3. Locate the tire mobility kit in the front trunk.
4. Unravel the electrical cord completely. Ensure there are no loops or tangles in the cord.
5. Plug the air compressor into a 12 V power outlet.
6. Remove the sticker from the tire sealant bottle and place it on the wheel to identify the damaged tire.
7. Screw the tire sealant bottle onto the air compressor.

8. Screw the larger end of the air hose onto the tire sealant bottle.

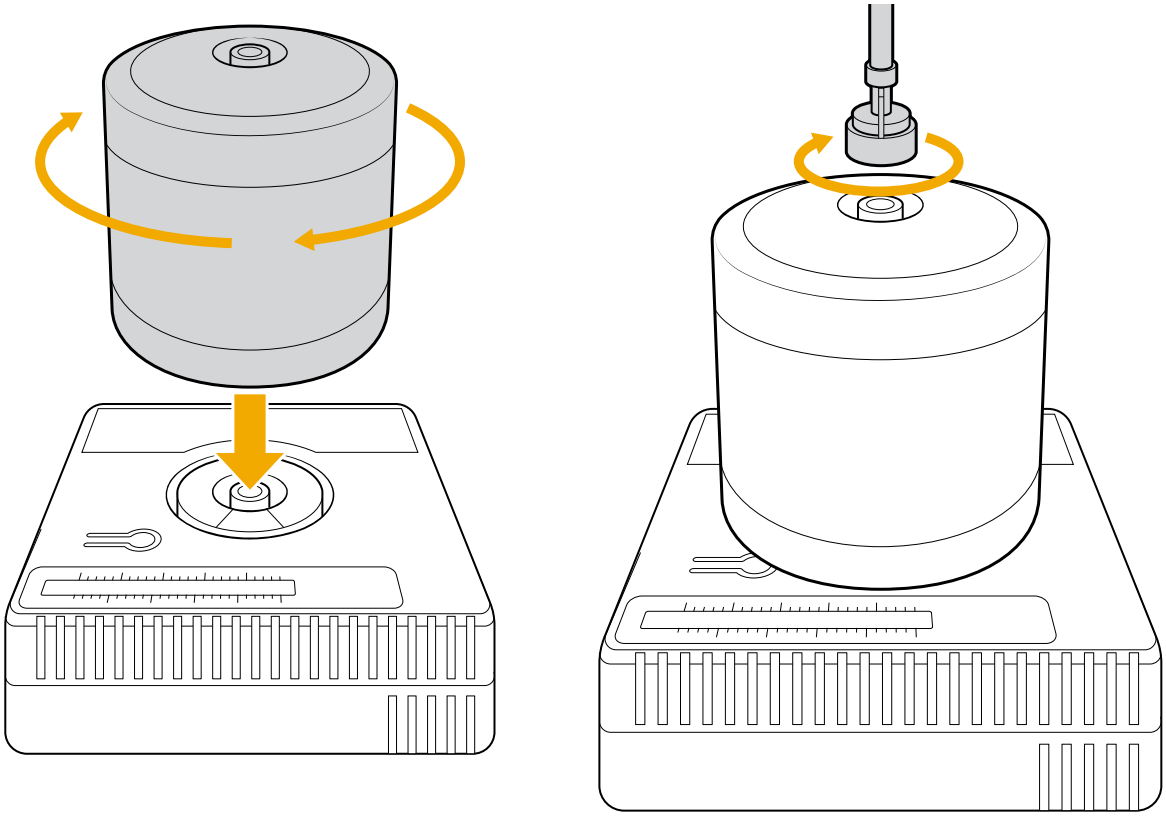

9. Remove the cap from the tire valve stem. Save it for reinstallation.
10. Screw the air hose nozzle onto the tire valve stem.

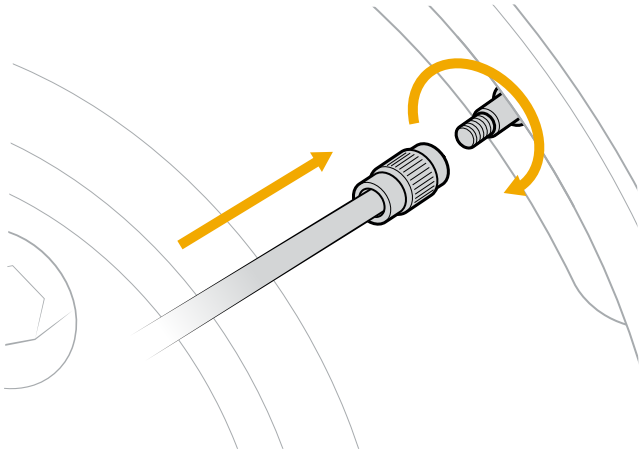

11. Turn on the air compressor to distribute the entire contents of the tire sealant bottle into the tire.

> **CAUTION**
> Don't continuously run the compressor for more than 10 minutes. Ensure the compressor cools down for at least 10 minutes before resuming to prevent overheating and possible damage.

12. Continue inflating for 10 minutes or until the gauge reads at least 30 psi (200 kPa), whichever is sooner.

> **NOTE**
> If the tire pressure doesn't increase, disconnect and store the air compressor. Slowly drive the vehicle forward and backward a few times for about 33 ft (10 m) to distribute the sealant throughout the tire. Then reconnect the air compressor and continue inflating.

13. Remove the air compressor hose from the tire and replace the cap on the tire valve stem.
14. Unplug and store the air compressor.

> **CAUTION**
> The air compressor may be hot after use. Allow to cool before storage.

15. Drive slowly for 5 minutes to distribute sealant throughout the tire.
16. Ensure the tire is still inflated, and then repeat the steps above to inflate the tire to the full recommended pressure as needed.

> **CAUTION**
> - Avoid driving faster than 50 mph (80 km/h) and repair or replace the tire as soon as possible.
> - If the tire won't inflate to the full recommended pressure, repair or replace the tire before driving to avoid damage to the tire or the vehicle.

Troubleshooting and Help

Troubleshooting

Restart

Restart the Software

If the vehicle apps, connectivity, or displays don't work normally, you may need to restart the software.

1. Ensure that the vehicle is in **P** (Park).
2. Find the two outermost thumb control buttons on the steering wheel.
3. Press both buttons at the same time and hold for 10 seconds.

NOTES

- The displays go dark for about one minute until the restart is complete.
- Restarting the software ends any active charging session.

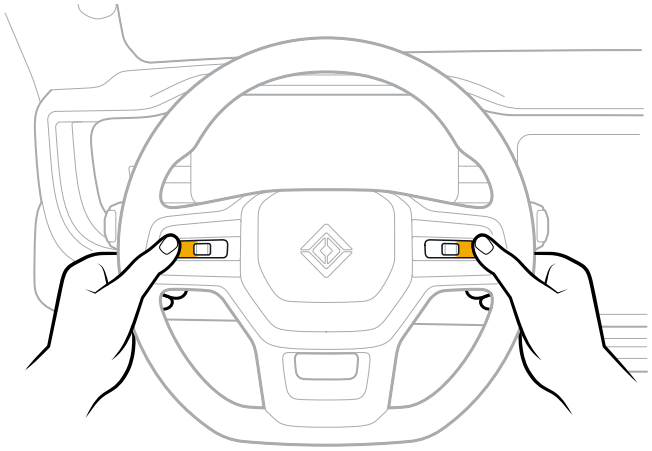

Restart the Vehicle

CAUTION

Contact Rivian before you restart the vehicle.

If the vehicle doesn't work normally after you restart the software, you may need to restart the vehicle.

1. Ensure that the vehicle is in **P** (Park) and not plugged in.
2. Find the left thumb control button on the steering wheel and the **Hazard Lights** button on the overhead console.
3. Press both buttons at the same time and hold for 10 seconds.

NOTES

- The displays go dark, and then a progress indicator lets you know when the restart is complete.
- If you accidentally press the **SOS** button SOS, cancel the SOS call on the center display within 20 seconds, if possible. If there's an accidental SOS call, notify the SOS call operator to avoid first responders being dispatched.

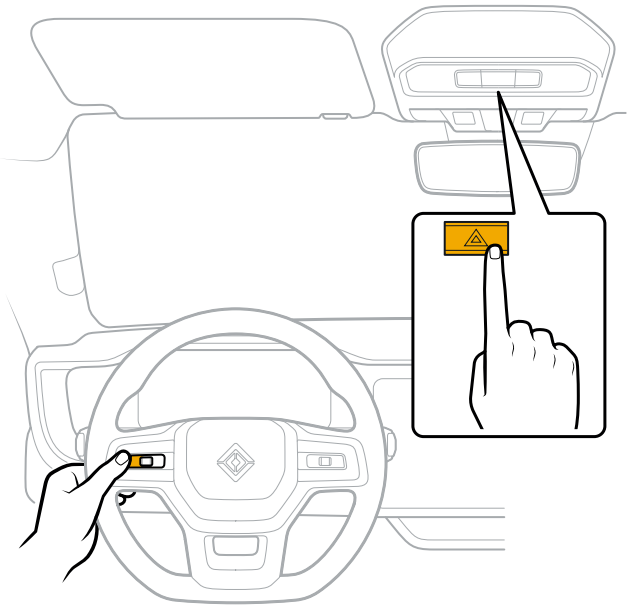

You can also restart the vehicle from the center display by doing the following:

1. Ensure that the vehicle is in **P** (Park).
2. Go to **Settings** > **Maintenance** > **Restart vehicle**.

NOTES

- Vehicle restart takes a few minutes. The vehicle can't be driven during this time. The displays go dark, and then a progress indicator lets you know when the restart is complete.
- Restarting the vehicle ends any active charging session.

Jump-Start the 12 V System

About 12 V System Jump Start

Signs of a discharged 12 V system include the following:

- The doors and storage areas don't unlock.
- The vehicle doesn't respond to the key fob.
- The lighting doesn't illuminate.
- The displays don't turn on.

A 12 V system jump start provides power to:

- Open the doors, front trunk, and rear trunk to remove your belongings.
- Open the charge port door if you need to charge the high-voltage battery.
- Release the electronic park brake from the center display if you need to transport the vehicle.
- Activate the vehicle's high-voltage battery so that the vehicle can maintain an "on" state.

On Model Year 2025 and later vehicles, a 12 V system jump start also provides power to:

- Adjust the front seats.
- Open or close the front windows.
- Access all storage areas.

IMPORTANT

After a 12 V system jump start, the following conditions may occur:

- If the vehicle lets you open the doors and storage areas but doesn't let you shift into **D** (Drive), plug the vehicle into an on-site charger if it is close enough.
- If the vehicle lets you open the doors and storage areas and lets you shift into **D** (Drive), plug the vehicle into an on-site charger or drive to a nearby charger if there is enough range.
- If the 12 V system jump start doesn't open the doors or storage areas, contact Rivian to transport the vehicle.
- If the high-voltage battery state of charge is zero and the vehicle cannot be charged, contact Rivian to transport the vehicle.
- If the 12 V battery warning status indicator stays on, contact Rivian to service the 12 V system.

CAUTION

- To ensure the vehicle maintains critical safety systems and operates normally, use genuine Rivian parts. Contact Rivian if a replacement battery is needed.
- Damage caused by replacement with an incompatible 12 V battery isn't covered by the New Vehicle Limited Warranty.

Follow these steps to Jump-Start the 12 V System.

Jump-Start the 12 V System

DANGER

Never allow the jump cables to touch each other or any metal part of the vehicle.

CAUTION

Don't use a Rivian vehicle to jump-start another vehicle.

Before you begin, ensure that you have an adequate external power source to jump-start a Rivian vehicle.

- If you're using another vehicle to jump-start, the other vehicle must run until the Rivian vehicle powers up.
- If you're using a portable jump starter, it must maintain a steady voltage between 13 to 16 V at 30 A.

To jump-start the 12 V system:

1. Remove the trailer hitch cover to access the jump-start wire harness.
2. Remove the round jump port cover to the right of the trailer hitch.
3. Pull out the jump-start wire harness and remove the protective tape from the connectors.

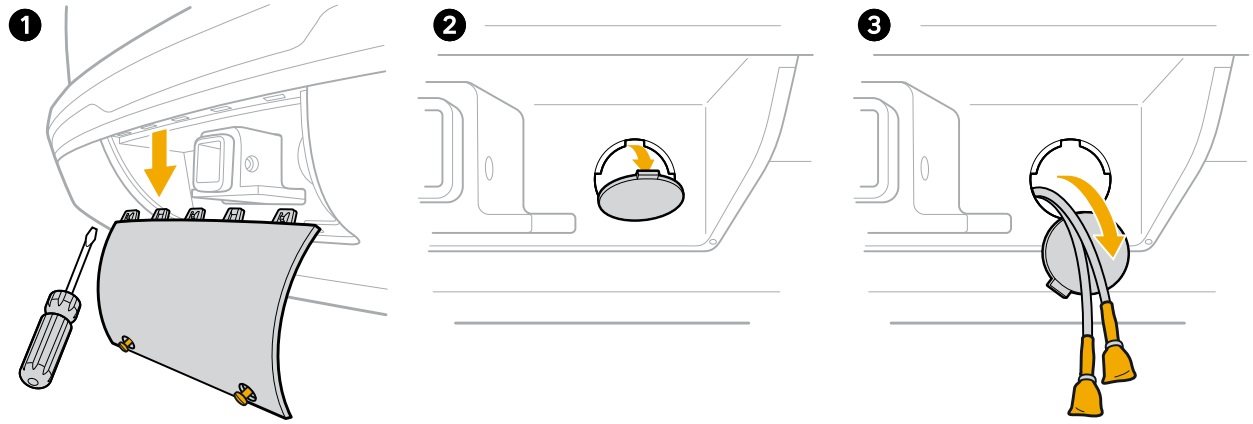

4. Connect the red positive lead (+) from the external power source to the red lead on the jump-start wire harness.
5. Connect the black negative lead (-) from the external power source to the black lead on the jump-start wire harness.

When the 12 V system has enough power, you can unlock the vehicle to open the doors, front trunk, and charge port door.

On Model Year 2025 and later vehicles, you can also adjust the front seats, open or close the front windows, and access all storage areas.

If the high-voltage battery state of charge is zero and you're close enough to a charger:

1. Open the charge port door.
2. Plug in to the charger.
3. If needed, turn off the charge schedule by choosing **Energy** on the center display.
4. Allow the vehicle to charge until the high-voltage battery reaches 25% state of charge.
5. Restart the vehicle.

After you jump-start the 12 V system, contact Rivian to review the status of the 12 V system and reseal the jump-start wire harness connectors.

If you can't drive the vehicle, contact Rivian. You may need to transport the vehicle to a Rivian Service Center.

Manually Open the Hood

Follow these steps if the hood won't open normally:

1. If possible, turn the steering wheel fully to the left for better access to the front wheel liner. The steering wheel may feel heavy if there is a loss of power-assisted steering.
2. Use a Torx (star) screwdriver with T20 and T25 bits to remove the screws from the inboard side of the left front wheel liner.

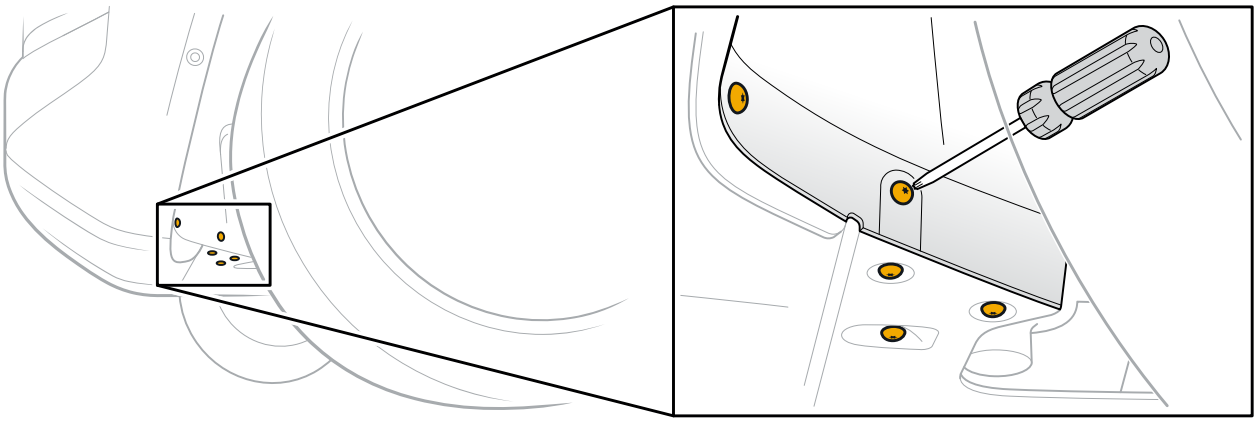

3. Lower the front skid plate to access the hood release cable.

> **NOTE**
> Remove extra screws as needed to improve access to the area.

4. Reach in and up to locate the hood release cable. Pull the cable to release the hood latch.

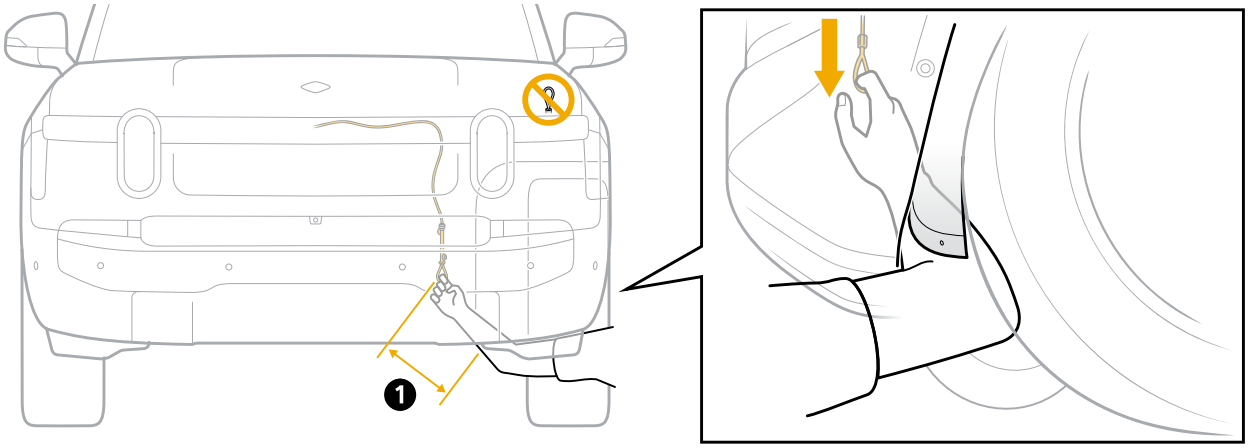

Item	Reach Distance (Approximate)
1	11 in (28 cm)

5. If the latch doesn't release, have a second person gently lift up and push down on the hood while you pull on the cable.

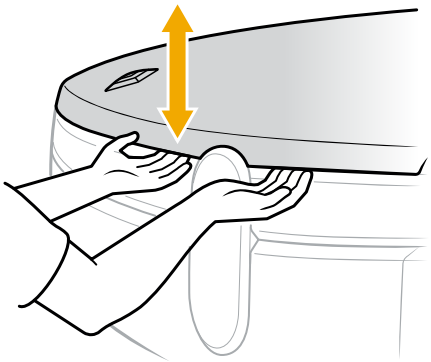

6. Replace the screws after the hood opens.

Manually Release the Charge Plug

If the charge plug won't release from the charge port, you can manually release it.

NOTES

- Always stop a charge session before you unplug from a DC fast charger. Go to **Energy** in the center display, and then choose **Stop Charging**.
- Ensure the vehicle is unlocked before you unplug from an AC charger.

1. Open the vehicle hood.
2. Remove the trim panel from the driver side of the vehicle. Pull up gently to release the clips.

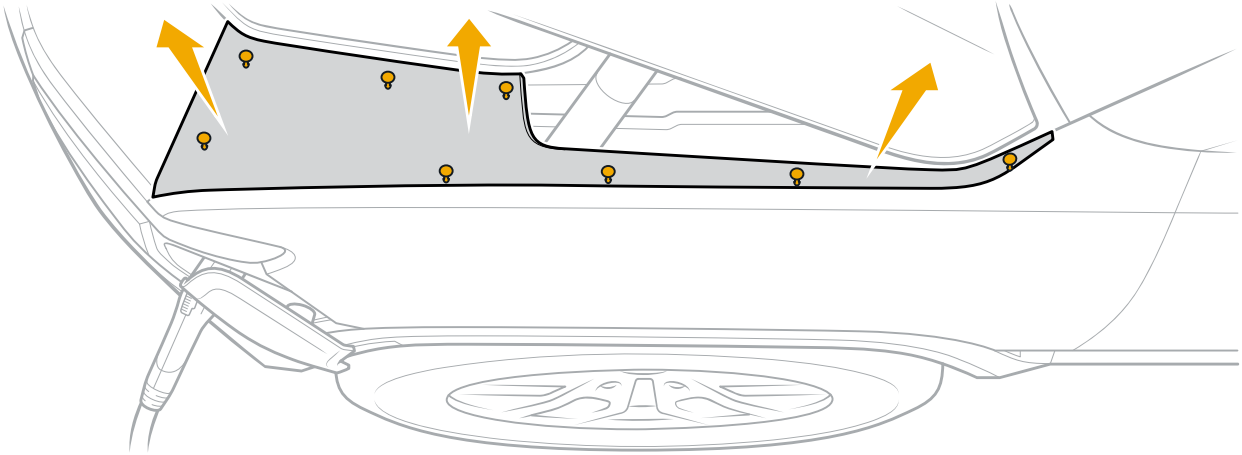

3. Gently pull the cable to release the charge plug.
4. Remove the charge plug from the charge port.
5. Replace the trim panel and secure the clips.
6. Close the hood.

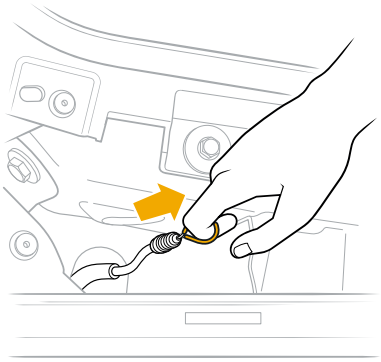

Calibration Settings

Driver Seat Position

If Roomy Entry and Exit doesn't work or you can't save your seat position to your Driver Profile, recalibrate to the original factory settings.

1. Ensure that the second-row footwell is clear of any objects.
2. Sit in the front passenger seat to avoid affecting the calibration.
3. Go to **Settings** ⚙ **> Maintenance > Profile resets > Calibrate driver position** on the center display.
4. Choose **Driver's seat**.
5. Follow the instructions on the center display to complete the calibration.

> **NOTE**
> After a seat calibration, the seats return to a default position instead of your last Driver Profile settings. Readjust and save your Driver Profile seat and Roomy Entry and Exit settings as needed.

Steering Wheel Position

If Roomy Entry and Exit doesn't work or you can't save your steering wheel position to your Driver Profile, recalibrate to the original factory settings.

1. Sit in the front passenger seat to avoid affecting the calibration.
2. Go to **Settings** ⚙ **> Maintenance > Profile resets > Calibrate driver position** on the center display.
3. Choose **Steering wheel**.
4. Follow the instructions on the center display to complete the calibration.

> **NOTE**
> After a steering wheel calibration, the steering wheel returns to a default position instead of your last Driver Profile settings. Readjust and save your Driver Profile seat and Roomy Entry and Exit settings as needed.

Reset the Windows

If a window isn't going all the way up or down, the Rivian mobile app or Apple Watch app (if installed and enabled) says that it's open while it's closed, or the window rolls back down after it closes, reset the window position.

CAUTION

Keep the path of the window clear and free of obstructions while resetting the windows.

NOTE

Disable the window locks (if enabled) before resetting a passenger window. In the center display, go to **Vehicle** to access the Quick Controls panel. Then choose **Shortcuts** **> Window locks**.

To reset a window:

1. Hold the window switch to roll the window all the way up or all the way down.
2. Release the switch.
3. Operate the switch again (in the same direction) and hold it for at least 8 seconds to complete the reset.

   IMPORTANT

   The window switch has two positions. During a reset, hold the switch in either the first or second position. Don't move between positions.

4. Repeat steps 1-3 for any window that isn't working normally.

Overheating

Extreme hot weather may cause the vehicle battery or powertrain components to overheat.

If your vehicle overheats, follow the instructions on the driver display.

System Failures

Contact Rivian to have the vehicle inspected if you notice any electrical, battery, or high-voltage issues. See Status Indicators for a list of potential issues.

Roadside Assistance

Transport the Vehicle

Prepare the Vehicle for Towing

WARNING

- Only transport the vehicle on a flatbed tow truck.
- Fire Hazard. Towing Rivian vehicles with any wheels on the ground can lead to significant damage and overheating. Extreme overheating can cause a fire.
- Damage caused by improper towing is not covered under warranty.

1. Ensure the front wheels face forward and are parallel with the vehicle.
2. Secure the steering wheel with a holder or strap to keep the wheels straight.

CAUTION

To prevent damage, don't use j-hooks to connect to any suspension components.

3. Connect the front of the vehicle to the tow truck winch with 6 ft (1.8 m) endless loops or a nylon bridle through the lower control arms.

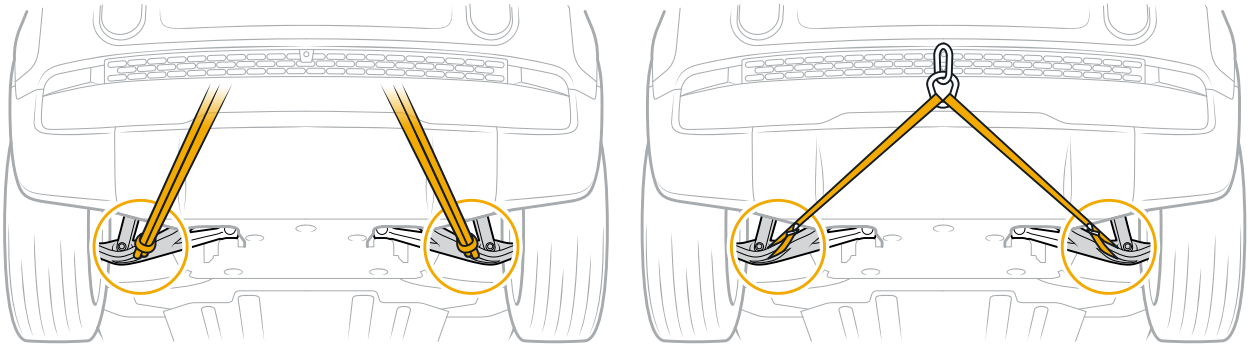

NOTE

If you can't tow from the front of the vehicle, you can connect to the trailer hitch to tow from the rear. You can also connect to the tow eye, if equipped.

4. Press and hold the brake pedal.

5. On the center display, choose **Settings** ⚙ **> Maintenance**. Then turn on **Park brake release**.

> **NOTE**
> Park brake release turns off after 15 minutes. You can also turn it off by putting the vehicle in **P** (Park) or turning off **Park brake release** in the center display.

6. Release the brake pedal and confirm release of the electronic park brake.

   You can now load the vehicle onto the tow truck.

> **NOTE**
> If you can't release the electronic park brake, lift the rear wheels to load the vehicle onto the tow truck.

Connect to the Trailer Hitch

Connect to the trailer hitch when you can't tow from the front of the vehicle.

1. Ensure the front wheels face forward and are parallel with the vehicle.
2. Secure the steering wheel with a holder or strap to keep the wheels straight.
3. Remove the trailer hitch cover.
   a. Use a flathead screwdriver to loosen the two captive screws. Turn a quarter turn counterclockwise.
   b. Grip the cover and pull straight down.
4. Insert a nylon bridle or short endless loops through the trailer hitch (1).

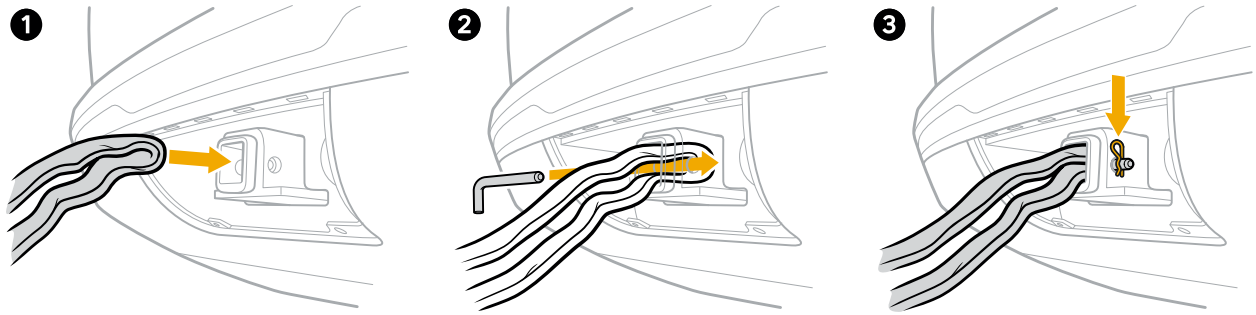

5. Insert the tow pin through the hitch to connect the bridle or loops (2), and then install the tow pin retaining clip (3).
6. Press and hold the brake pedal.
7. On the center display, choose **Settings** ⚙ **> Maintenance**. Then turn on **Park brake release**.

> **NOTE**
> Park brake release turns off after 15 minutes. You can also turn it off by putting the vehicle in **P** (Park) or turning off **Park brake release** in the center display.

8. Release the brake pedal and confirm release of the electronic park brake.

   You can now load the vehicle onto the tow truck.

> **NOTE**
> If you can't release the electronic park brake, lift the rear wheels to load the vehicle onto the tow truck.

Connect to the Tow Eye

Connect using the tow eye if the vehicle is not equipped with tow hooks on the front bumper.

1. Remove the tow eye from the front trunk.
   - Open the front trunk, and then lift the bottom panel to locate the tow eye storage area.

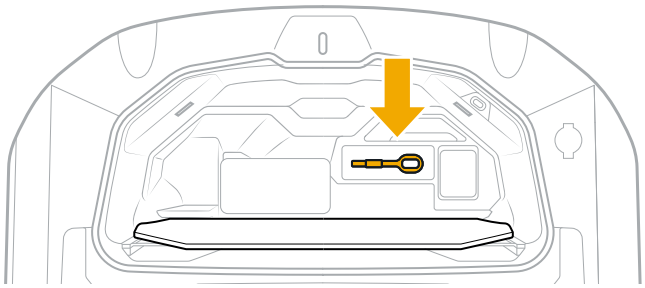

2. Locate the tow eye connection point on the passenger side of the front bumper.

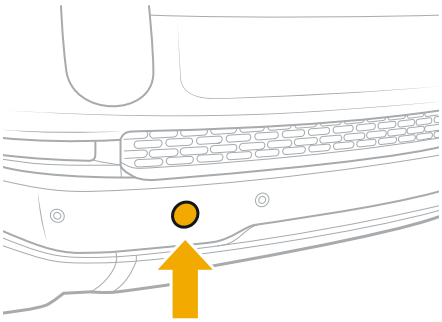

3. Remove the cover from the tow eye connection point.

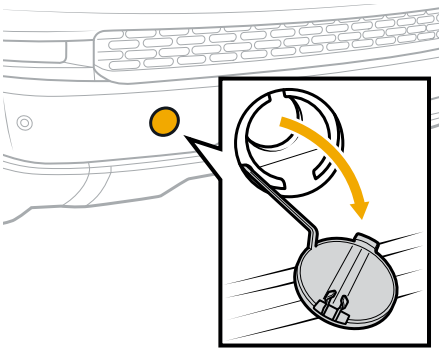

4. Screw the tow eye counterclockwise into the connection point until it is fully secure.

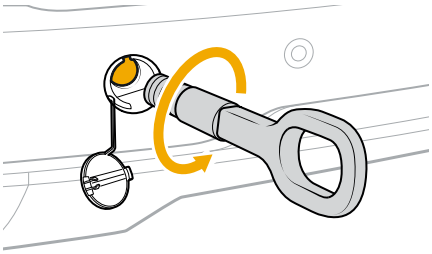

5. Connect the winch hook to the tow eye.

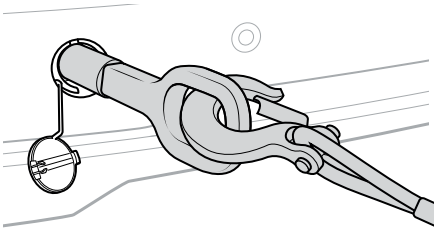

6. Press and hold the brake pedal.
7. On the center display, choose **Settings** ⚙ **> Maintenance**. Then turn on **Park brake release**.

> **NOTE**
> Park brake release turns off after 15 minutes. You can also turn it off by putting the vehicle in **P** (Park) or turning off **Park brake release** in the center display.

8. Release the brake pedal and confirm release of the electronic park brake.

   You can now load the vehicle onto the tow truck.

> **NOTE**
> If you can't release the electronic park brake, lift the rear wheels to load the vehicle onto the tow truck.

9. Pull as straight as possible. The angle can't exceed 30° in any direction to prevent damage to the vehicle.

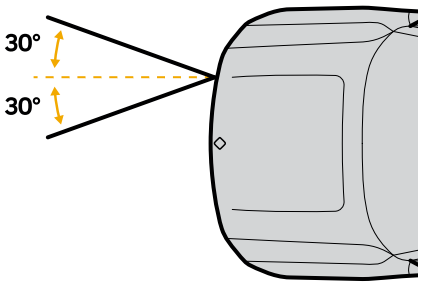

Lift the Rear Wheels

If the battery is dead or you can't release the electronic park brake, lift the rear wheels to load the vehicle onto a tow truck.

DANGER

Secure the vehicle and connect it to the tow truck before you lift the rear wheels. The vehicle can roll when you lift the rear wheels.

CAUTION

Only lift the rear wheels to load the vehicle onto the tow truck. Don't tow the vehicle behind another vehicle or with two wheels on the ground.

1. Chock the front wheels to secure the vehicle.
2. Connect the vehicle to the tow truck using an endless loop through the front control arms or rear trailer hitch.
3. Lift the rear wheels using skates, a dolly, or a tow truck wheel lift.

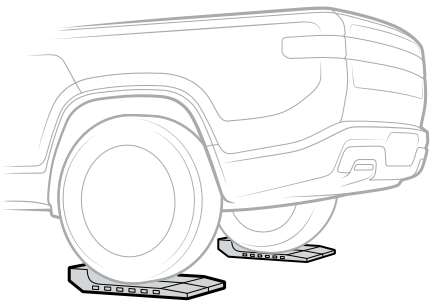

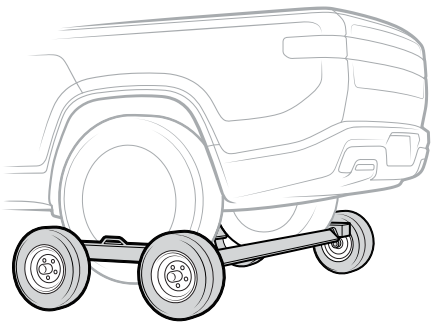

4. With the rear wheels off the ground, position the vehicle to be loaded onto the tow truck bed.

   You can now load the vehicle onto the tow truck.

   NOTE

   If using skates, use the skates to pull the vehicle all the way up the tow truck ramp.

Load the Vehicle onto the Tow Truck

After you've connected the vehicle, you can load the vehicle onto a flatbed tow truck as follows:

1. Ensure the **Park brake release** is turned on or the rear wheels are lifted. See Prepare the Vehicle for Towing.
2. Remove the wheel chocks, if needed.
3. Use the tow truck winch to pull the vehicle onto the tow truck bed.
4. Pull at 5 mph (8 km/h) or less to prevent damage to the powertrain.

> **NOTE**
> If you pull too fast, the vehicle stops and shifts to **P** (Park).

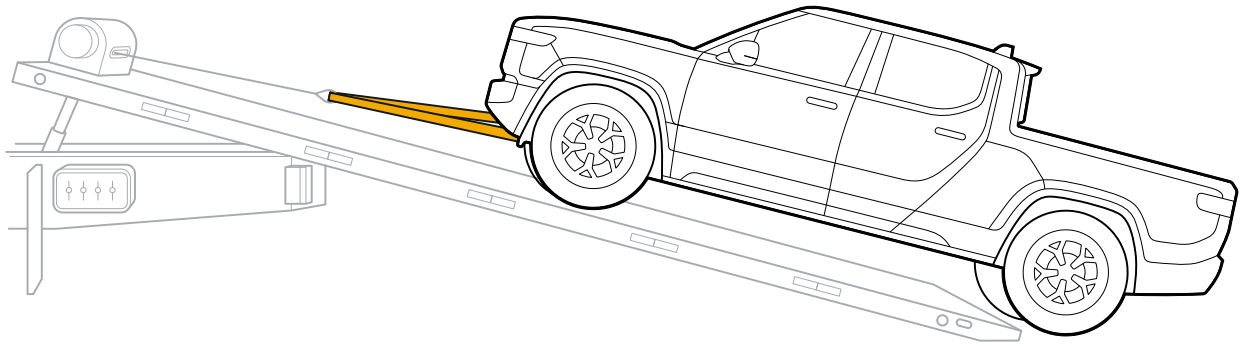

5. Tie down the vehicle using eight-point retention straps with two points of contact per corner.

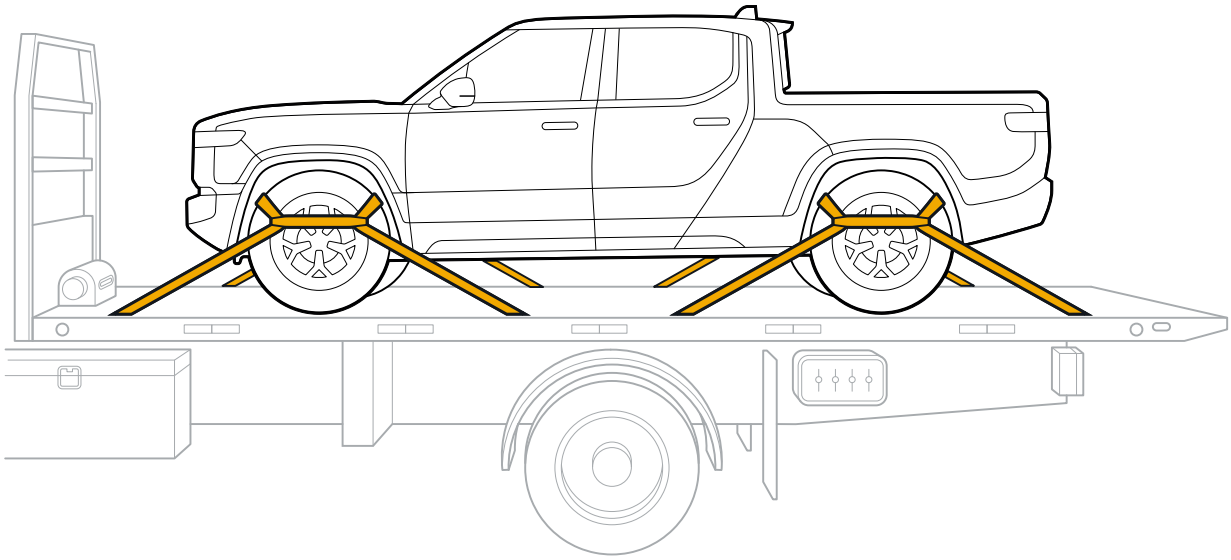

CAUTION

To prevent damage, ensure the straps don't contact the brake lines or suspension components behind the tire.

6. Put the vehicle into **P** (Park).
7. Go to **Drive Modes** in the center display. Choose **All-Purpose**, and then choose **Low** under **Ride Height**.
8. If you're transporting the vehicle over 50 mi (80 km), turn on Vehicle Shipping Mode to preserve battery charge.

Vehicle Shipping Mode

Use Vehicle Shipping mode to preserve battery charge while the vehicle is in transit. Vehicle Shipping mode turns off various features, including the following:

- Gear Guard alarm
- Gear Guard motion videos
- Passive lock/unlock

> **NOTES**
> - When Vehicle Shipping mode is turned on, you can leave keys inside the vehicle and the vehicle sleeps normally.
> - The Rivian Camp Speaker locks in the dock.

To turn on Vehicle Shipping mode when you are ready to transport the vehicle:

1. Put the vehicle into **P** (Park).
2. Go to **Settings** ⚙ **> Maintenance**.
3. Turn on **Vehicle Shipping** mode.

> **NOTE**
> Startup may take longer than normal when Vehicle Shipping mode is turned on.

To turn off Vehicle Shipping mode after you arrive at your destination:

1. Put the vehicle in **P** (Park).
2. Go to **Settings** ⚙ **> Maintenance**.
3. Turn off **Vehicle Shipping** mode.

Help

Emergency SOS

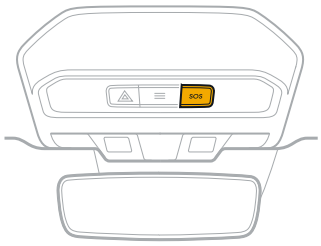

Use the **SOS** button SOS on the overhead console in case of an emergency. Press the protective cover to access the **SOS** button. Press the button to reach a 24/7 national call center that assesses the situation, routes your call appropriately, and dispatches help if necessary. The **SOS** button turns red when a call is in progress. You can confirm or cancel the call on the center display. The call center operator calls for assistance from first responders when there is an event such as an accident. First responders include police, firefighters, and medical personnel.

If the vehicle detects that a significant collision has occurred, it automatically initiates an SOS call.

The audio system suppresses background noise so you can focus on the call. Your current location displays on the center display while the call is in progress in case the call center operator can't locate your vehicle and you need to communicate this information.

For more information on what data may be collected from you and your vehicle during an SOS call, see Data and Privacy.

The SOS feature works as long as you're in a cellular coverage area, even if you don't have your phone with you.

If you need assistance but don't need help from first responders, such as if your vehicle breaks down or needs to be towed, contact Rivian.

NOTES

- If the emergency call center can't be reached, press the **SOS** button to try the call again.
- If you press the **SOS** button while on a phone call, this disconnects the phone call.
- If you accidentally push the **SOS** button, you can cancel the call on the center display within 20 seconds of initiating the call.
- If you don't cancel or confirm on the center display, an SOS call is automatically placed after 20 seconds. Notify the call center operator if it is an accidental call to avoid first responders being dispatched.
- The options to confirm or cancel the SOS call aren't visible on the center display if the vehicle is in **R** (Reverse) since the backup camera takes over.
- The **SOS** button doesn't work if you drive outside the United States or Canada.

In the event of an emergency or malfunction, press the **Hazard Lights** button ⚠ on the overhead console to turn on the hazard lights and alert surrounding vehicles.

Rear Door Manual Service Release

NOTES

- The interior e-latches do not function under the following conditions:
  - When the vehicle is moving above 8 mph (12 km/h)
  - When the child lock is activated on a specific door
  - Between the moment the vehicle detects a collision and 6 seconds after the collision event ends
- Following a collision or power loss of the electrical system, the vehicle power supply and power distribution systems continue to support operation of the interior e-latches.
- To exit the vehicle after a collision or other emergency incident, press the e-latch as you normally would to open the door.
- In the unlikely event the redundant power distribution system can't continue to support operation of the interior e-latches over an extended period of time, you can use the manual service release to open a rear door from the inside.

To open a rear door using the manual service release:

1. Pull off the door panel to the left of the pull handle.
2. Pull down on the release cord. The door opens.

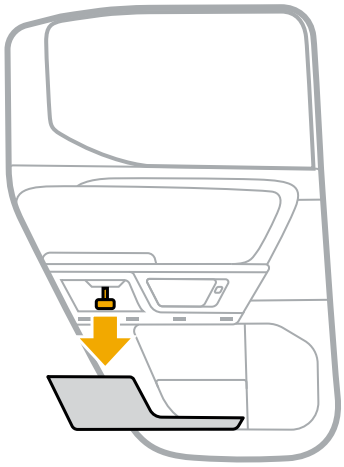

Legal and Reference

Legal

Certificates and Conformity

Wireless Device	Model	FCC ID	IC ID
Automotive Long-Range Radar	ARS540	OAYARS5A	4135A-ARS5A
Automotive Short-Range Radars	SRR6PS	L2CSRR6PS	2432A-SRR6PS
Autonomy Experience Module	AXM 2.0	2AW3A-2NAT23AXM	26958-2NAT23AXM
Camp Speaker	RCS 0.9 and 1.0	Contains FCC ID: 2AOHH-TURBOXC404	Contains IC: 23465-TURBOXC40X
Garage Door Opener	HomeLink	NZLUAHL5R	4112A-UAHL5R
NFC Door Handle (NDH)	NDH 2.0	2AW3A-2WWG23NDH	26958-2WWG23NDH
R1T Key Fob	R1TKFB	2AW3A-2WWG24R1TKFB	26958-2WWG24R1TKF
Tire Pressure Monitoring System	TPMS	YGOTSSRE4A	4008C-TSSRE4A
Vehicle Access System	VAS 2.0	2AW3A-2WWG23VAS	26958-2WWG23VAS
Wireless Charger	X10 (Model Year 2022 to early 2026) WCM 2.0 (early 2026 and later)	2AW3A-2WWG23CC (Model Year 2022 to early 2026) 2BQGA-WCUM-2401 (early 2026 and later)	26958-2WWG23CC (Model Year 2022 to early 2026) 34608-WCUM2401 (early 2026 and later)

FCC Statement

This device complies with Part 15 of the FCC Rules. Operation is subject to the following two conditions:

1. This device may not cause harmful interference, and
2. This device must accept any interference received, including interference that may cause undesired operation.

This equipment has been tested and found to comply with the limits for a Class B digital device, pursuant to Part 15 of the FCC Rules. These limits are designed to provide reasonable protection against harmful interference in a residential installation. This equipment generates, uses, and can radiate radio frequency energy. And, if not installed and used in accordance with the instructions, may cause harmful interference to radio communications. However, there is no guarantee that interference will not occur in a particular installation. If this equipment does cause harmful interference to radio or television reception, which can be determined by turning the equipment off and on, the user is encouraged to try to correct the interference by one or more of the following measures:

- Reorient or relocate the receiving antenna.
- Increase the separation between the equipment and receiver.
- Connect the equipment into an outlet on a circuit different from that to which the receiver is connected.
- Consult the dealer or an experienced radio/TV technician for help.

Ultra Wide Band

- This equipment is approved under Part 15.519 for handheld use.
- The use of antennas mounted on outdoor structures, for example, antennas mounted on the outside of a building or on a telephone pole, or any fixed outdoors infrastructure, is prohibited.
- Ultra Wide Band equipment may not be employed for the operation of toys.
- Operation onboard an aircraft, a ship, or a satellite is prohibited.

CAUTION

Changes or modifications not expressly approved by the manufacturer could void the user's authority to operate this equipment.

Exposure to Radio Frequency Energy

Rivian vehicles use Wi-Fi®, *Bluetooth*®, and cellular radio (LTE/WCDMA/GSM) transmitters that emit radio frequency (RF) energy. Though these devices emit low levels of RF energy, keep a minimum specified distance between the human body and the wireless devices (and their antennas) specified in the table below during operation to meet the guidelines for RF exposure from the Federal Communications Commission of the United States (FCC), Industry Canada, and European Union.

The devices emitting RF energy used in Rivian vehicles are listed below based on their recommended **Maximum Permissible Exposure (MPE)** distance.

Wireless Device	Model	MPE Distance	Antenna Location
Automotive Long-Range Radar	ARS5A	8 in (20 cm)	Front Bumper
Automotive Short-Range Radars	SRR6PS	8 in (20 cm)	Front and Rear Bumper
Autonomy Experience Module	AXM 2.0	8 in (20 cm)	Instrument Panel
Camp Speaker	RCS 0.9 and 1.0	8 in (20 cm)	Center Console*
Vehicle Access System	VAS 2.0	8 in (20 cm)	Door Pillars
Wireless Charger	X10 and WCM 2.0	8 in (20 cm)	Center Console

* Camp Speaker is removable from the vehicle's center console. The MPE distance should be from the Camp Speaker antenna, whether docked or undocked.

Class 1 Laser Product

The camera located in the interior rearview mirror includes recording enabled by Class 1 infrared laser illumination behind the mirror.

CAUTION

- No maintenance or service is required of this mirror or laser and camera. Do not attempt to disassemble or modify the rearview mirror laser and camera assembly.
- Caution – Use of controls, adjustments, or performance of procedures other than those specified in this document may result in hazardous radiation exposure.

Labels in the table below may only appear in this document.

Label	Description
CLASS 1 LASER PRODUCT **EN/IEC 60825-1 2014**	Class 1 explanatory label
Gentex Corporation 600 N. Centennial Zeeland, MI 49464 **DMS Mirror.** #905-6741 **SERIAL** #SPX1091 Complies with FDA performance standards for laser products except for conformance with IEC 60825-1 Ed. 3., as described in Laser Notice No. 56, dated May 8, 2019.	Manufacturer's ID with certification statement

State-Specific Disclaimers

California

Passenger and Off-Highway Motor Vehicles

WARNING

Operating, servicing and maintaining a passenger vehicle or off-highway motor vehicle can expose you to chemicals including phthalates and lead, which are known to the State of California to cause cancer and birth defects or other reproductive harm. To minimize exposure, service your vehicle in a well-ventilated area and wear gloves or wash your hands frequently when servicing your vehicle. For more information go to https://www.p65warnings.ca.gov/products/passenger-vehicle.

WARNING

Certain components in your vehicle such as lithium batteries, airbag modules, and seat belt pretensioners may contain perchlorate material. Special handling may apply for service or vehicle end of life disposal. For more information go to www.dtsc.ca.gov/hazardouswaste/perchlorate.

Event Data Recorder

This vehicle is equipped with an event data recorder (EDR). The main purpose of an EDR is to record, in certain crash or near crash-like situations, such as an airbag deployment or hitting a road obstacle, data that will assist in understanding how a vehicle's systems performed. The EDR is designed to record data related to vehicle dynamics and safety systems for a short period of time, typically 30 seconds or less. The EDR in this vehicle is designed to record such data as:

- How various systems in your vehicle were operating;
- Whether or not the driver and passenger safety belts were buckled/fastened;
- How far (if at all) the driver was depressing the accelerator and/or brake pedal; and
- How fast the vehicle was traveling.

These data can help provide a better understanding of the circumstances in which crashes and injuries occur.

> **NOTE**
> EDR data are recorded by your vehicle only if a non-trivial crash situation occurs; no data are recorded by the EDR under normal driving conditions, and no personal data (e.g., name, gender, age, and crash location) are recorded. However, other parties, such as law enforcement, could combine the EDR data with the type of personally identifying data routinely acquired during a crash investigation.

To read data recorded by an EDR, special equipment is required, and access to the vehicle or the EDR is needed. In addition to the vehicle manufacturer, other parties, such as law enforcement, that have the special equipment, can read the information if they have access to the vehicle or the EDR.

Data and Privacy

Your privacy is important to Rivian. To learn more about the data we collect from you and your vehicle and our data handling practices, and to contact the Privacy Team, see Rivian's Data Privacy Notice.

Contact Rivian with any questions on vehicle features or functionality.

Rivian vehicles are designed to provide a connected driving experience, and data is central to many features. Go to **Settings** ⚙ **> Data and privacy** on the vehicle's center display to adjust these settings (where available).

To help improve and develop Autonomy features, you may choose to share camera data from your vehicle with Rivian and our service providers. To protect your privacy, we do not directly associate this data with you or your vehicle for product improvement or development purposes.

Driver Attention Detection

Driver Attention Detection uses the interior camera to track head and eye movements and confirm your attention to the road, enabling Autonomy features such as Highway Assist and Universal Hands-Free. Highway Assist and Universal Hands-Free allow hands-free driving on highways and on most marked local roads when you're attentive to the road. Driver Attention Detection should be on to ensure the best Autonomy experience. Driver Attention Detection processes interior camera images in-vehicle, and only certain data is recorded and shared with Rivian. Images are only shared with Rivian if you also allow interior camera data sharing.

> **NOTE**
>
> Disabling Driver Attention Detection will make certain Autonomy features unavailable, such as Highway Assist and Universal Hands-Free.

Interior Camera

Your vehicle is equipped with an interior camera in the rearview mirror. When you opt into this sharing, images of the vehicle cabin and data derived from these images will be shared with Rivian to develop or improve the vehicle's safety systems, including machine-learning models and Driver Attention Detection, which can help detect driver distraction. Images are occasionally captured based on certain triggers, such as the driver's head or eye movements, or at specific time intervals.

Rivian takes steps to protect your privacy, such as not associating these images with you or your vehicle for product improvement purposes, and collecting the images only while your vehicle is in Drive (not Park).

> **NOTE**
>
> If the interior vehicle camera is off, the camera does not process any video.

Exterior Cameras

Rivian provides control over shared exterior vehicle images for Autonomy product improvement purposes. Exterior camera images that are shared with Rivian help improve and develop Autonomy safety features. You can choose to not share exterior camera images with Rivian.

Rivian applies privacy-enhancing techniques when using these images for product improvement or development, including the following:

- Images are not associated with you or your vehicle, except in the event of a crash.
- The first and last three minutes of your drive that starts or ends at a saved location (such as "Home," "Work," or "Saved" locations) aren't used. You may save any location to enact this restriction. If there aren't any saved locations, this three-minute privacy window applies to the start and end of all drives.
- Precise location is attached to the images only where you have agreed to location data sharing for Autonomy features. This allows Rivian to understand and diagnose Autonomy issues that can occur at a particular location, based on road segment features such as lane markings or signage.

If you opt out of sharing exterior camera images with Rivian, your exterior cameras will process images solely in your vehicle to provide Autonomy safety features. Your vehicle's exterior cameras are also used for other features, such as parking, towing, and Gear Guard. Exterior images may be shared with Rivian and associated with your VIN in the event of a crash, regardless of your choices to share these images, to enable crash investigation and regulatory reporting.

Exterior images are programmed to be captured only in significant collisions and may not be sent to Rivian due to issues such as poor cellular service and damaged equipment. Insert a USB drive or external hard drive into the vehicle to capture videos directly using the Road Cam. See View Recorded Videos and Copy a Video.

Location Data Sharing

To enable certain features and services, your precise location data is shared with Rivian and third-party partners.

WARNING

You have the ability to turn on or off precise location sharing in "Data and privacy." Turning off location data sharing limits or disables certain functionality including, but not limited to, the following:

- Navigation (real-time mapping, EV charger availability, and traffic data)
- Certain Autonomy features for high-precision mapping and lane centering (such as Highway Assist, Lane Change on Command, and Smart Turn Signal)
- Rivian mobile app or Apple Watch app, if installed and enabled (displaying your vehicle's location in the app)
- Rivian Assistant (nearby search and weather services)
- Rivian Data Analytics (improvements to products and services)

NOTE

Your precise location will be shared with Rivian for critical safety purposes regardless of your choices for location data sharing, such as SOS calls, crash investigation, and regulatory reporting. Your general location, about a 7 mi (11 km) radius, will also be shared with Rivian.

Clear Settings

Use Clear Settings to remove personal information and preferences from your vehicle, such as the following:

- Saved locations, favorites, radio stations, and stored Gear Guard videos.
- Paired garages, Bluetooth devices, and synced contacts or media.

Certain system functions and services will be reset or restored to default, such as the following:

- Hotspots, language and units, and audio settings.
- Spotify. You may still need to log into your account online to remove the vehicle from your linked devices.

NOTES

- Clear Settings doesn't remove driver profiles or paired keys from the vehicle.
- Clear Settings doesn't delete any information stored on the Rivian cloud. This includes data you've registered with your Rivian ID, such as an email address or vehicle charging accounts.
- The Clear Settings action cannot be undone.
- If you're selling your Rivian vehicle, visit rivian.com/resale-help for more information. You can also scan the QR code on the center display in **Settings ⚙ > Maintenance > Profile resets > Clear settings > Learn more**.

IMPORTANT

- Ensure that your vehicle is parked in a safe place with connection to the Internet.
- Allow Clear Settings a few minutes to remove your personal information and preferences. The center display screen goes dark, and the vehicle reboots after Clear Settings is complete.
- If you are using Clear Settings as an initial step to selling your vehicle, you will still need to contact Rivian to complete the process.

1. On the center display, go to **Settings ⚙ > Maintenance** and scroll down to **Clear settings**.
2. Choose **Learn more** for a summary of the types of personal information and preferences that can be cleared. You can scan the QR code on this screen to access a page with full instructions on this process.
3. Choose **Clear settings** at the bottom of the "Learn more" page. Then choose **Clear now** on the pop-up window.

Odometer Disclosure

All Rivian vehicles undergo extensive quality testing, road testing, and inspection before delivery. This may result in a few miles on the odometer when you accept delivery of your Rivian vehicle.

To check your odometer reading on the center display, go to **Settings** ⚙ **> My R1T**.

Reporting Safety Defects

If you believe that your vehicle has a defect which could cause a crash or could cause injury or death, you should immediately inform the National Highway Traffic Safety Administration (NHTSA) in addition to notifying Rivian.

If NHTSA receives similar complaints, it may open an investigation, and if it finds that a safety defect exists in a group of vehicles, it may order a recall and remedy campaign. However, NHTSA cannot become involved in individual problems between you, your dealer, or Rivian.

Contact National Highway Traffic Safety Administration (NHTSA)

Call (toll-free)

Vehicle Safety Hotline (toll-free)
(888) 327-4236

TTY
(888) 275-9171

Write

Administrator
NHTSA
1200 New Jersey Avenue, SE
Washington, DC 20590

Website

You can also obtain other information about motor vehicle safety from this website:
https://www.nhtsa.gov

Contact Rivian

Still need help? Connect with us.

RIVIAN

Rivian Support

(888) RIVIAN1 / (888) 748-4261
rivian.com/support/contact

Insurance

(888) RIVIAN8 / (888) 748-4268

Roadside Assistance 24/7

(844) RIVIAN4 / (844) 748-4264

Service 24/7

(855) RIVIAN5 / (855) 748-4265
rivian.com/support/service