Health Facts for You

UWHealth

CT (CAT) Scan for Radiation Treatment Planning for the Breast

This handout explains what you can expect during your CT scan. When you get to the Radiation Oncology department, please check in at the front desk.

A CT scan is a type of x-ray. While some CT scans are done to diagnose disease, the purpose if this scan is to plan your radiation treatments. Your doctor may or may not be there during the scan, but you will meet a radiation therapist. This may be the same person you see at your radiation treatments.

We will review your health records before your CT scan.

If you are pregnant, or think you might be pregnant, please tell us before the scan. Your doctor may order a pregnancy test if you are of childbearing age.

During Your Scan
The entire visit will take about **30 minutes**. The scan itself takes only a few seconds.

You will be asked to take off your shirt and bra. We will keep you covered during the scan. Once we are ready, you will lay on a narrow table with your arms resting above your head or on your stomach. We may move you around. You need to lay straight and flat. **If you are uncomfortable at any point, please let us know. You will be lying in this same position for the entire treatment. You must be able to hold this position for 15-30 minutes.**

We may draw reference points on your skin to note your exact position and take pictures of your positioning for your treatment record.

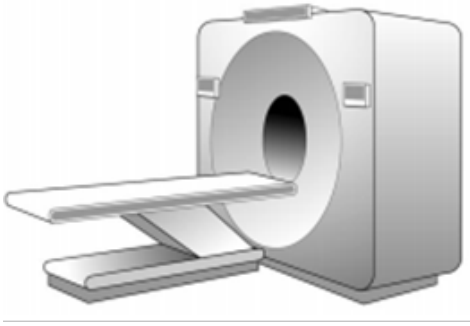

The table will move you in and out of the scanner several times. During the scan, you are alone in the room, but we can see and hear you. You must lie still during the scan. If you need something, or have any problems during the scan, just speak up.

We may need to do multiple scans. This does **not** reflect the severity of your disease. You may be asked to take a deep breath and hold it. It will take practice to get the same breath hold each time. If you need to hold your breath for the scan, you may also need to hold your breath for treatment.

Next Steps
Once your CT scan is done, your scan will be sent to your doctor. These images are used to plan your radiation treatments. This will take a few days.

The radiation therapists will schedule your radiation treatments. Unless you and your doctor have made other plans, they will call you with your schedule within 5-10 business days. They will tell you where to go and how to prepare for your treatments.

Placeholder appointments have been scheduled and will appear in MyChart and on any printouts from UW Health. These appointments are not confirmed until you receive a phone call from our department.

When to Call
Please call if you have any questions or concerns.

Who to Call
If you have questions, please contact your provider through MyChart or call your provider listed in your After Visit Summary or After Hospital Care Plan. For a list of UW Health Clinics, visit www.uwhealth.org/.

Patient Name:
_____

Date of Appointment:
_____

Time of Appointment:
_____

Special Instructions:
_____

Your health care team may have given you this information as part of your care. If so, please use it and call if you have any questions. If this information was not given to you as part of your care, please check with your doctor. This is not medical advice. This is not to be used for diagnosis or treatment of any medical condition. Because each person's health needs are different, you should talk with your doctor or others on your health care team when using this information. If you have an emergency, please call 911. Copyright © 4/2025 University of Wisconsin Hospitals and Clinics Authority. All rights reserved. Produced by the Department of Nursing. HF#8042