# INDUSTRIAL PLUGS & SOCKETS

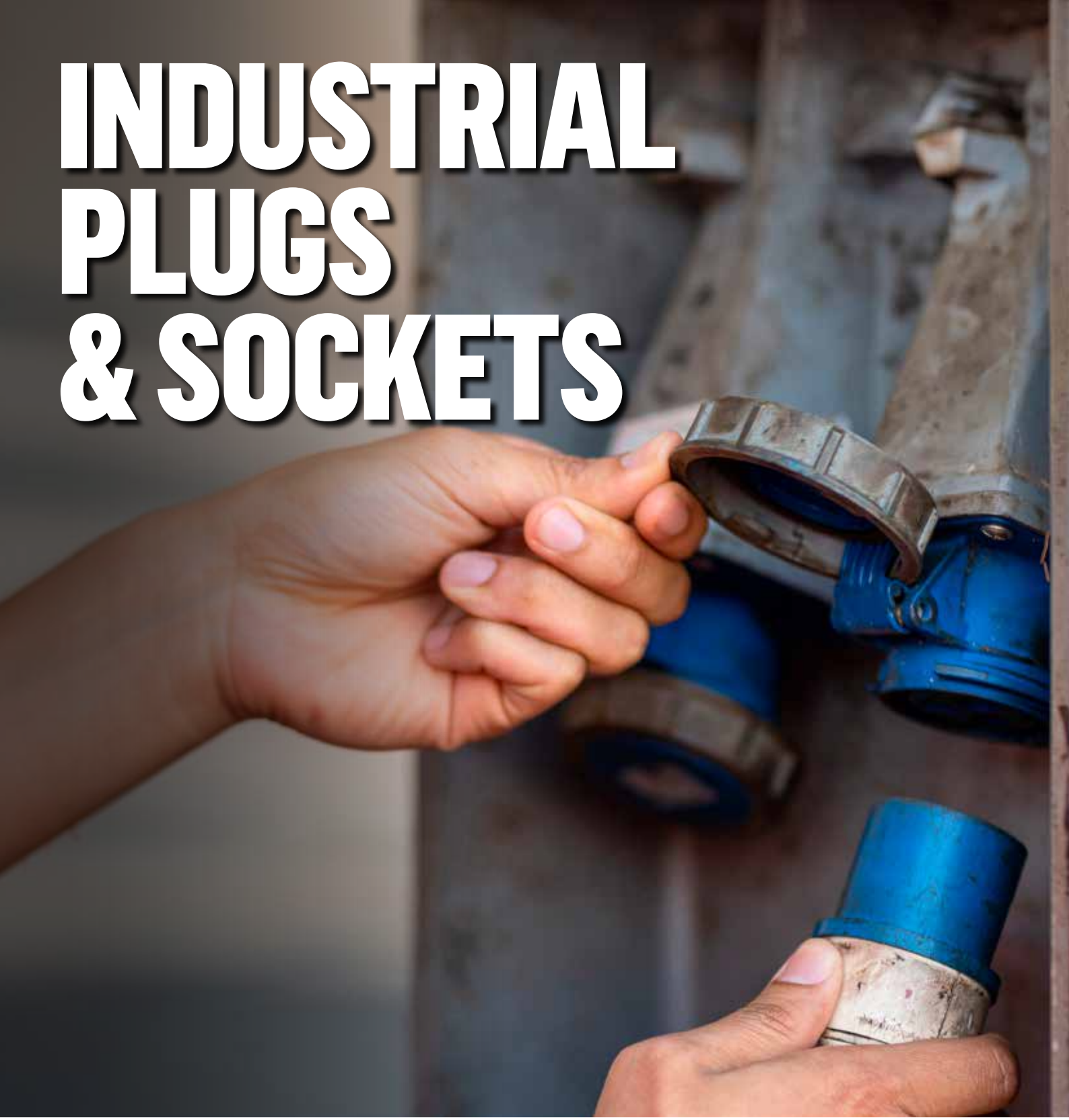

- IEC/EN 60309
- IP44 Quick Fit Range
- IP67 Quick Fit Range
- Plug & Couplers
- Wall Sockets
- Panel Sockets
- Switched Interlocked Sockets
- Splitters

MCG INDUSTRIAL

MCG Industrial is a member of the British Standards Institution

## CONTENTS

**IP44 - QUICK FIT RANGE**

Introduction ..... 2
Plugs - IP44 ..... 3
Couplers - IP44 ..... 3
Wall/Surface Sockets - IP44 ..... 4
Appliance Inlets - IP44 ..... 4
Angled Panel Sockets - IP44 ..... 5
Straight Panel Sockets - IP44 ..... 5
Interlocked Switched Sockets - IP44. Surface Mount - Horizontal ..... 6
RCD Facility Interlocked Switched Sockets - IP44. Surface Mount - Vertical ..... 6

**IP67 - QUICK FIT RANGE**

Introduction ..... 7
Plugs - IP67 ..... 8
Couplers - IP67 ..... 8
Wall/Surface Sockets - IP67 ..... 9
Angled Panel Sockets - IP67 ..... 10
Straight Panel Sockets - IP67 ..... 10
3-Way Splitter Units - IP67 ..... 11
3-Way Splitter Units - IP67 ..... 11
Adaptor ..... 11
Extension Leads - IP44 ..... 12
Plugs - IP44 ..... 12
Couplers - IP44 ..... 13
Wall Mounted Sockets - IP44 ..... 13

## IP44 - QUICK FIT RANGE

### Introduction

The NEW range of MCG Quick Fit IP44 plugs and sockets offer the perfect solution for most commercial and industrial applications from 16 Amps to 32 Amps with 110V, 240V and 415V options.

All the range fully conforms to IEC 60309.

The quick fit range are time saving and manufactured to the highest quality and specifications.

**Features:**

- Manufactured from thermoplastic - suitable for general use
- Quick release feature
- Fast and simple assembly and wiring, cuts time and costs
- Ergonomic grip
- Corrosion and impact resistant
- Colour coded for fast identification of operating voltage
- Safe and reliable
- Typical operating temperature -25°C to 50°C
- Screwless cable grip
- IP44 rated

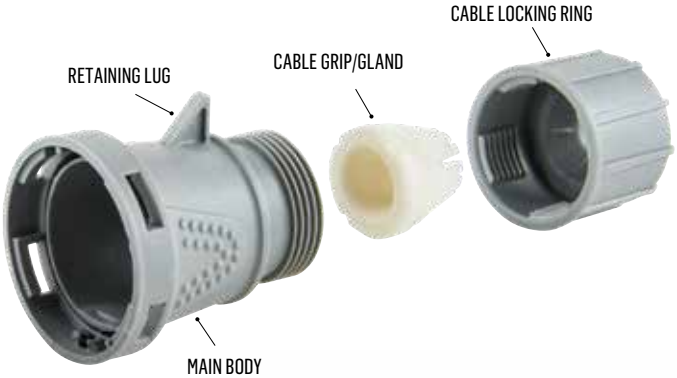

PLUG AND SOCKET CONNECTED SHOWING RETAINING LUG OPERATION

LOCKING TAB - LIFT WITH SCREWDRIVER

TWIST TO RELEASE

SEPARATED UNIT READY FOR WIRING

IN-LINE TERMINALS FOR SPEED OF CONNECTING

## PLUGS - IP44

| Code | Ref No. | Voltage | Poles | Pins | A [mm] | B [mm] | ØC [mm] | ØD [mm] |
|---|---|---|---|---|---|---|---|---|
| **16 Amp** | | | | | | | | |
| 2070-9208 | CXN163P110P | 110V | 2P+E | 3 | 124 | 58 | 15.5 | 51 |
| 2073-6742 | CXN163P240P | 240V | 2P+E | 3 | 124 | 58 | 15.5 | 51 |
| 2070-9211 | CXN164P415P | 415V | 3P+E | 4 | 133 | 65.5 | 15.5 | 58.5 |
| 2070-9214 | CXN165P415P | 415V | 3P+N+E | 5 | 136 | 73.5 | 17 | 64.5 |
| **32 Amp** | | | | | | | | |
| 2070-9217 | CXN323P110P | 110V | 2P+E | 3 | 153.5 | 78 | 22 | 66.5 |
| 2070-9220 | CXN323P240P | 240V | 2P+E | 3 | 153.5 | 78 | 22 | 66.5 |
| 2070-9229 | CXN324P415P | 415V | 3P+E | 4 | 153.5 | 78 | 22 | 66.5 |
| 2070-9232 | CXN325P415P | 415V | 3P+N+E | 5 | 159.5 | 82.5 | 22 | 74 |

CXN163P110P

CXN163P240P

CXN164P415P

CXN325P415P

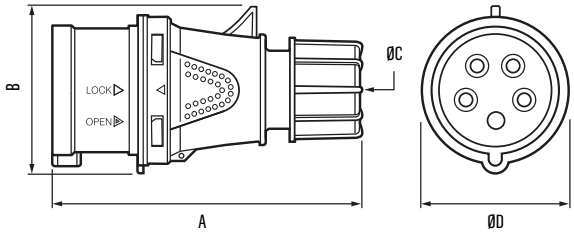


## COUPLERS - IP44

| Code | Ref No. | Voltage | Poles | Pins | A [mm] | B [mm] | ØC [mm] | ØD [mm] |
|---|---|---|---|---|---|---|---|---|
| **16 Amp** | | | | | | | | |
| 2070-9223 | CXN163P110C | 110V | 2P+E | 3 | 135 | 77 | 15.5 | 51 |
| 2070-9226 | CXN163P240C | 240V | 2P+E | 3 | 135 | 77 | 15.5 | 51 |
| 2070-9235 | CXN164P415C | 415V | 3P+E | 4 | 143 | 83 | 16 | 58 |
| 2070-9238 | CXN165P415C | 415V | 3P+N+E | 5 | 147 | 90 | 17 | 65 |
| **32 Amp** | | | | | | | | |
| 2070-9241 | CXN323P110C | 110V | 2P+E | 3 | 167 | 96 | 22 | 67 |
| 2070-9244 | CXN323P240C | 240V | 2P+E | 3 | 167 | 96 | 22 | 67 |
| 2070-9247 | CXN324P415C | 415V | 3P+E | 4 | 167 | 96 | 22 | 67 |
| 2070-9250 | CXN325P415C | 415V | 3P+N+E | 5 | 173 | 101 | 22 | 72 |

CXN163P110C

CXN163P240C

CXN324P415C

CXN165P415C

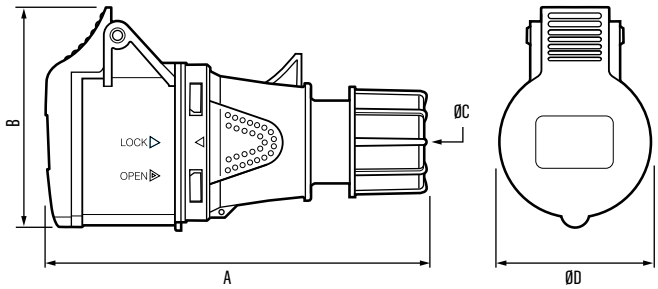

## WALL/SURFACE SOCKETS - IP44

| Code | Ref No. | Voltage | Poles | Pins | A [mm] | B [mm] | C [mm] | D [mm] | Gland [mm] |
|---|---|---|---|---|---|---|---|---|---|
| **16 Amp** | | | | | | | | | |
| 2297-1400 | CXN163P110W20 | 110V | 2P+E | 3 | 98 | 124 | 86 | 74.5 | 20 |
| 2297-1403 | CXN163P240W20 | 240V | 2P+E | 3 | 98 | 124 | 86 | 74.5 | 20 |
| 2300-8096 | CXN164P415W20 | 415V | 3P+E | 4 | 96.5 | 125.5 | 86 | 74.5 | 20 |
| 2299-8727 | CXN165P415W25 | 415V | 3P+N+E | 5 | 115 | 138 | 100 | 85 | 25 |
| **32 Amp** | | | | | | | | | |
| 2070-9163 | CXN323P110W | 110V | 2P+E | 3 | 116 | 149 | 100 | 85 | 25 |
| 2302-9585 | CXN323P240W25 | 240V | 2P+E | 3 | 116 | 149 | 100 | 85 | 25 |
| 2299-8733 | CXN324P415W25 | 415V | 3P+E | 4 | 116 | 149 | 100 | 85 | 25 |
| 2299-8736 | CXN325P415W25 | 415V | 3P+N+E | 5 | 118 | 151 | 100 | 85 | 25 |

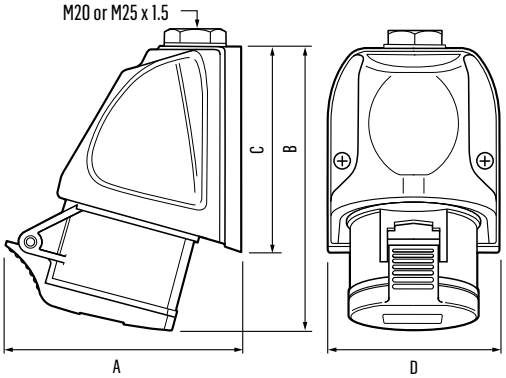


COMPONENT PARTS

## APPLIANCE INLETS - IP44

| Code | Ref No. | Voltage | Poles | Pins | A [mm] | B [mm] | C [mm] | D [mm] | Gland [mm] |
|---|---|---|---|---|---|---|---|---|---|
| **16 Amp** | | | | | | | | | |
| 2365-5577 | CXN163P110AIWP | 110V | 2P+E | 3 | 74.5 | 114 | 86 | 74.5 | 20 |
| 2365-5580 | CXN163P240AIWP | 240V | 2P+E | 3 | 74.5 | 114 | 86 | 74.5 | 20 |
| 2365-5583 | CXN164P415AIWP | 415V | 3P+E | 4 | 75 | 118 | 86 | 74.5 | 20 |
| 2365-5586 | CXN165P415AIWP | 415V | 3P+N+E | 5 | 92.5 | 130 | 100 | 85 | 25 |
| **32 Amp** | | | | | | | | | |
| 2365-5589 | CXN323P110AIWP | 110V | 2P+E | 3 | 91.5 | 140 | 100 | 85 | 25 |
| 2365-5592 | CXN323P240AIWP | 240V | 2P+E | 3 | 91.5 | 140 | 100 | 85 | 25 |
| 2365-5595 | CXN324P415AIWP | 415V | 3P+E | 4 | 91.5 | 140 | 100 | 85 | 25 |
| 2365-5604 | CXN325P415AIWP | 415V | 3P+N+E | 5 | 94.5 | 141 | 100 | 85 | 25 |

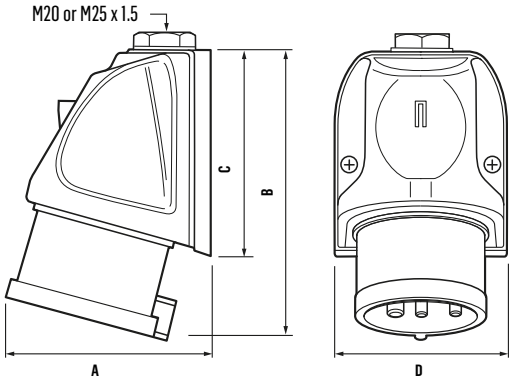

## ANGLED PANEL SOCKETS - IP44

- Complete with gasket

| Code | Ref No. | Voltage | Poles | Pins | A [mm] | B [mm] | C [mm] | D [mm] |
|---|---|---|---|---|---|---|---|---|
| **16 Amp** | | | | | | | | |
| 2070-9148 | CXN163P110PA | 110V | 2P+E | 3 | 86.5 | 75.5 | 33.5 | 48 |
| 2070-9175 | CXN163P240PA | 240V | 2P+E | 3 | 86.5 | 75.5 | 33.5 | 48 |
| 2070-9178 | CXN164P415PA | 415V | 3P+E | 4 | 86.5 | 75.5 | 34.5 | 48.5 |
| 2070-9181 | CXN165P415PA | 415V | 3P+N+E | 5 | 86.5 | 75.5 | 35 | 50 |
| **32 Amp** | | | | | | | | |
| 2070-9184 | CXN323P110PA | 110V | 2P+E | 3 | 86.5 | 75.5 | 45.5 | 53.5 |
| 2070-9190 | CXN323P240PA | 240V | 2P+E | 3 | 86.5 | 75.5 | 45.5 | 53.5 |
| 2070-9193 | CXN324P415PA | 415V | 3P+E | 4 | 86.5 | 75.5 | 45.5 | 53.5 |
| 2070-9196 | CXN325P415PA | 415V | 3P+N+E | 5 | 90 | 80 | 46.5 | 54.5 |

CXN163P110PA

CXN163P240PA

CXN164P415PA

CXN165P415PA

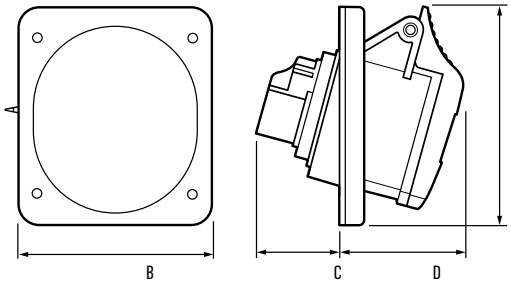


## STRAIGHT PANEL SOCKETS - IP44

- Complete with gasket

| Code | Ref No. | Voltage | Poles | Pins | A [mm] | B [mm] | C [mm] |
|---|---|---|---|---|---|---|---|
| **16 Amp** | | | | | | | |
| 2070-9187 | CXN163P110PS | 110V | 2P+E | 3 | 86 | 20.5 | 53.5 |
| 2070-9199 | CXN163P240PS | 240V | 2P+E | 3 | 86 | 20.5 | 53.5 |
| **32 Amp** | | | | | | | |
| 2070-9202 | CXN323P110PS | 110V | 2P+E | 3 | 95.5 | 26 | 63.5 |
| 2070-9205 | CXN323P240PS | 240V | 2P+E | 3 | 95.5 | 26 | 63.5 |

CXN163P110PS

CXN323P240PS

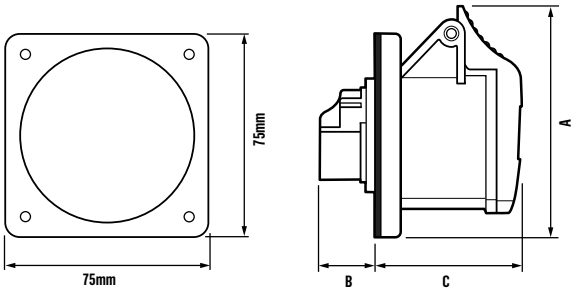

# INTERLOCKED SWITCHED SOCKETS - IP44

## Surface Mount - Horizontal

- All the range fully conforms to IEC 60309-4

| Code | Ref No. | Voltage | Poles | Pins | A [mm] | B [mm] | C [mm] |
|---|---|---|---|---|---|---|---|
| **16 Amp** | | | | | | | |
| 1453-9162 | CX163P110SIS | 110V | 2P+E | 3 | 120 | 167 | 108 |
| 1453-9165 | CX163P240SIS | 240V | 2P+E | 3 | 120 | 167 | 108 |
| 1453-9168 | CX164P415SIS | 415V | 3P+E | 4 | 120 | 167 | 111.5 |
| 1453-9171 | CX165P415SIS | 415V | 3P+N+E | 5 | 120 | 167 | 112 |
| **32 Amp** | | | | | | | |
| 1453-9174 | CX323P240SIS | 240V | 2P+E | 3 | 120 | 167 | 118 |
| 1453-9177 | CX324P415SIS | 415V | 3P+E | 4 | 120 | 167 | 118 |
| 1453-9180 | CX325P415SIS | 415V | 3P+N+E | 5 | 120 | 167 | 120.5 |

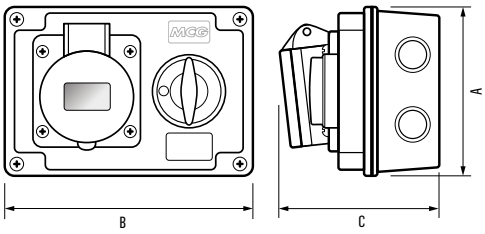

CX163P110SIS

CX323P240SIS

CX164P415SIS

CX325P415SIS

# RCD FACILITY INTERLOCKED SWITCHED SOCKETS - IP44

## Surface Mount - Vertical

- Complete with RCD compartment (RCD not included)
- Includes M20 and M25 glands
- All the range fully conforms to IEC 60309-1/2/4

| Code | Ref No. | Voltage | Poles | Pins | A [mm] | B [mm] | C [mm] |
|---|---|---|---|---|---|---|---|
| **16 Amp** | | | | | | | |
| 2707-7287 | CX163P240SISCOMP | 240V | 2P+E | 3 | 255 | 166 | 121.1 |
| 2707-7290 | CX164P415SISCOMP | 415V | 3P+E | 4 | 255 | 166 | 115.3 |
| 2707-7293 | CX165P415SISCOMP | 415V | 3P+N+E | 5 | 255 | 166 | 115.6 |
| **32 Amp** | | | | | | | |
| 2707-7296 | CX323P240SISCOMP | 240V | 2P+E | 3 | 255 | 166 | 121.4 |
| 2707-7299 | CX324P415SISCOMP | 415V | 3P+E | 4 | 255 | 166 | 121.6 |
| 2707-7302 | CX325P415SISCOMP | 415V | 3P+N+E | 5 | 255 | 166 | 122.6 |

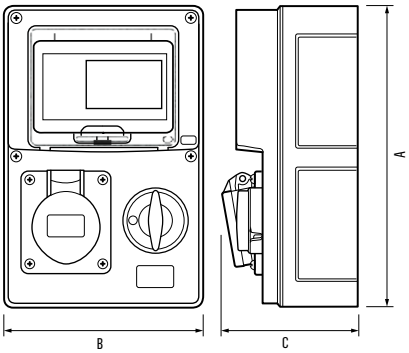

CX163P240SISCOMP

CX163P240SISCOMP

CX164P415SISCOMP

# IP67 - QUICK FIT RANGE

## Introduction

The NEW range of MCG Quick Fit IP67 plugs and sockets offer the perfect solution for most commercial and industrial applications from 16 Amps to 125 Amps, in 110V, 230V and 415V options.

All fully conform to IEC 60309.

The quick fit range are time saving and manufactured to the highest quality and specification.

**Features:**

- Manufactured from thermoplastic - suitable for general use
- Quick release feature
- Fast and simple assembly and wiring, cuts time and costs
- Typical operating temperature -25˚C to 50˚C
- Ergonomic grip
- Corrosion and impact resistant
- Colour coded for fast identification of operating voltage
- Safe and reliable
- Screwless cable grip
- IP67 rated

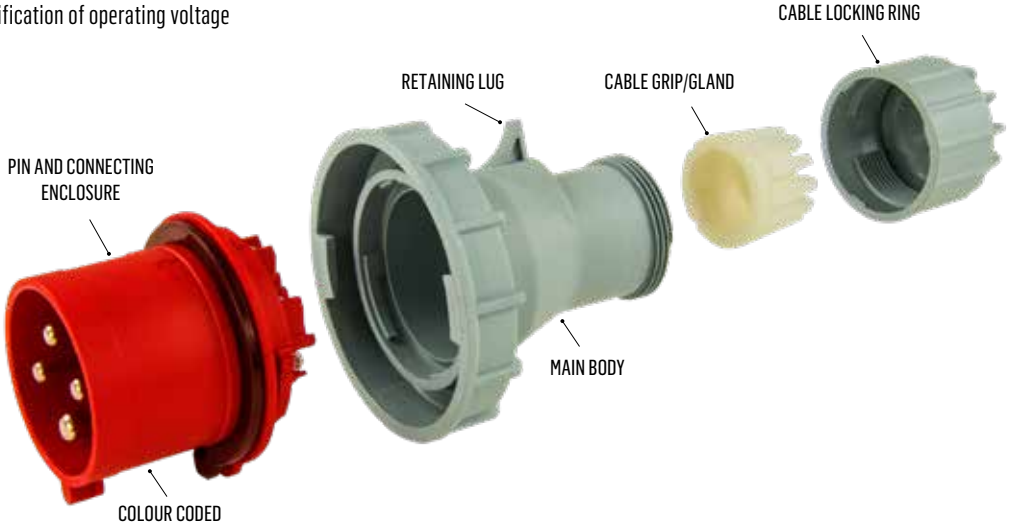

LOCKING TAB - LIFT WITH SCREWDRIVER

TWIST TO RELEASE

SEPARATED UNIT READY FOR WIRING

IN-LINE TERMINALS FOR SPEED OF CONNECTING

CENTRE GUIDE PIN
(for 63A & 125A ONLY)

CENTRE GUIDE PIN LOCATION HOLE
(FOR 63A & 125A ONLY)

PLUG AND SOCKET CONNECTED
SHOWING RETAINING LUG OPERATION

## PLUGS - IP67

| Code | Ref No. | Voltage | Poles | Pins | A [mm] | ØB [mm] | ØC [mm] |
|---|---|---|---|---|---|---|---|
| **16 Amp** | | | | | | | |
| 2570-5225 | CXN163P110P67A | 110V | 2P+E | 3 | 124 | 71 | 15.5 |
| 2570-5234 | CXN163P240P67A | 240V | 2P+E | 3 | 124 | 71 | 15.5 |
| 2570-5243 | CXN164P415P67A | 415V | 3P+E | 4 | 133 | 79 | 15.5 |
| 2570-5423 | CXN165P415P67A | 415V | 3P+N+E | 5 | 136 | 87 | 17 |
| **32 Amp** | | | | | | | |
| 2570-5225 | CXN323P110P67A | 110V | 2P+E | 3 | 153.5 | 93 | 22 |
| 2570-5234 | CXN323P240P67A | 240V | 2P+E | 3 | 153.5 | 93 | 22 |
| 2570-5243 | CXN324P415P67A | 415V | 3P+E | 4 | 153. | 93 | 22 |
| 2570-5423 | CXN325P415P67A | 415V | 3P+N+E | 5 | 159.5 | 100.5 | 22 |
| **63 Amp** | | | | | | | |
| 2073-6865 | CXN633P240P67 | 240V | 2P+E | 3 | 260 | 113.5 | 32 |
| 2073-6880 | CXN634P415P67 | 415V | 3P+E | 4 | 260 | 113.5 | 32 |
| 2073-6895 | CXN635P415P67 | 415V | 3P+N+E | 5 | 260 | 113.5 | 32 |
| **125 Amp** | | | | | | | |
| 2073-6682 | CXN1253P240P67 | 240V | 2P+E | 3 | 309 | 127 | 45 |
| 2073-6697 | CXN1254P415P67 | 415V | 3P+E | 4 | 309 | 127 | 45 |
| 2073-6712 | CXN1255P415P67 | 415V | 3P+N+E | 5 | 309 | 127 | 45 |

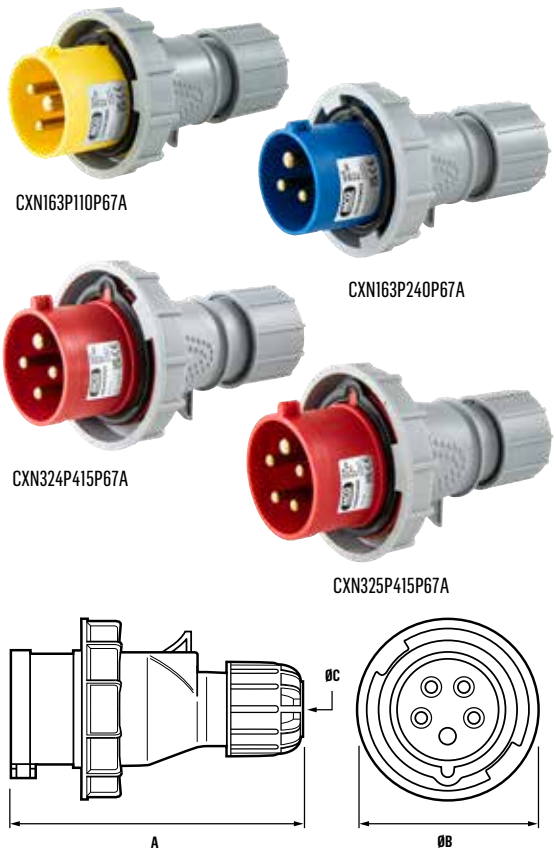


## COUPLERS - IP67

| Code | Ref No. | Voltage | Poles | Pins | A [mm] | ØB [mm] | ØC [mm] |
|---|---|---|---|---|---|---|---|
| **16 Amp** | | | | | | | |
| 2570-5222 | CXN163P110C67A | 110V | 2P+E | 3 | 138 | 71 | 15.5 |
| 2570-5231 | CXN163P240C67A | 240V | 2P+E | 3 | 138 | 71 | 15.5 |
| 2570-5240 | CXN164P415C67A | 415V | 3P+E | 4 | 146 | 79 | 15.5 |
| 2570-5420 | CXN165P415C67A | 415V | 3P+N+E | 5 | 151 | 87 | 17 |
| **32 Amp** | | | | | | | |
| 2570-5429 | CXN323P110C67A | 110V | 2P+E | 3 | 170 | 93 | 22 |
| 2570-5438 | CXN323P240C67A | 240V | 2P+E | 3 | 170 | 93 | 22 |
| 2570-5447 | CXN324P415C67A | 415V | 3P+E | 4 | 170 | 93 | 22 |
| 2570-5456 | CXN325P415C67A | 415V | 3P+N+E | 5 | 176 | 100.5 | 22 |
| **63 Amp** | | | | | | | |
| 2073-6862 | CXN633P240C67 | 240V | 2P+E | 3 | 270 | 111 | 32 |
| 2073-6877 | CXN634P415C67 | 415V | 3P+E | 4 | 270 | 111 | 32 |
| 2073-6892 | CXN635P415C67 | 415V | 3P+N+E | 5 | 270 | 111 | 32 |
| **125 Amp** | | | | | | | |
| 2073-6679 | CXN1253P240C67 | 240V | 2P+E | 3 | 328 | 127 | 45 |
| 2073-6694 | CXN1254P415C67 | 415V | 3P+E | 4 | 328 | 127 | 45 |
| 2073-6709 | CXN1255P415C67 | 415V | 3P+N+E | 5 | 328 | 127 | 45 |

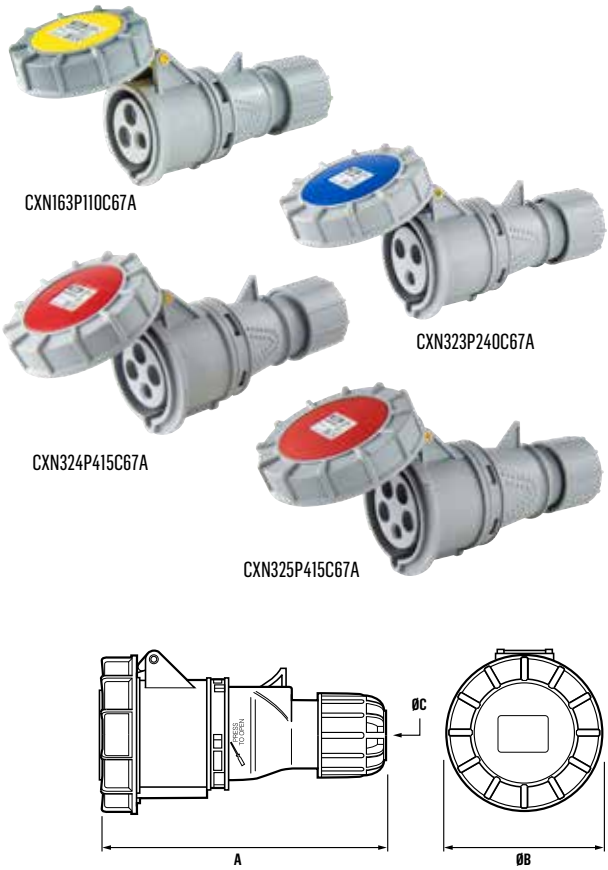

## WALL/SURFACE SOCKETS - IP67

- Complete with gland

| Code | Ref No. | Voltage | Poles | Pins | A [mm] | B [mm] | C [mm] |
|---|---|---|---|---|---|---|---|
| **16 Amp** | | | | | | | |
| 2570-5228 | CXN163P110W67A | 110V | 2P+E | 3 | 88 | 135 | 90.5 |
| 2570-5237 | CXN163P240W67A | 240V | 2P+E | 3 | 88 | 135 | 90.5 |
| 2570-5246 | CXN164P415W67A | 415V | 3P+E | 4 | 90.5 | 136 | 90.5 |
| 2570-5426 | CXN165P415W67A | 415V | 3P+N+E | 5 | 108.5 | 145.5 | 90.5 |
| **32 Amp** | | | | | | | |
| 2570-5435 | CXN323P110W67A | 110V | 2P+E | 3 | 114 | 156.5 | 105 |
| 2570-5444 | CXN323P240W67A | 240V | 2P+E | 3 | 114 | 156.5 | 105 |
| 2570-5453 | CXN324P415W67A | 415V | 3P+E | 4 | 114 | 156.5 | 105 |
| 2570-5462 | CXN325P415W67A | 415V | 3P+N+E | 5 | 118 | 158 | 105 |
| **63 Amp** | | | | | | | |
| 2073-6874 | CXN633P240W67 | 240V | 2P+E | 3 | 175 | 230 | 118 |
| 2073-6889 | CXN634P415W67 | 415V | 3P+E | 4 | 175 | 230 | 118 |
| 2073-6904 | CXN635P415W67 | 415V | 3P+N+E | 5 | 175 | 230 | 118 |
| **125 Amp** | | | | | | | |
| 2073-6691 | CXN1253P240W67 | 240V | 2P+E | 3 | 165 | 330 | 160 |
| 2073-6706 | CXN1254P415W67 | 415V | 3P+E | 4 | 165 | 330 | 160 |
| 2073-6721 | CXN1255P415W67 | 415V | 3P+N+E | 5 | 165 | 330 | 160 |

CXN163P110W67A

CXN323P240W67A

CXN324P415W67A

CXN1255P415W67

COMPONENT PARTS

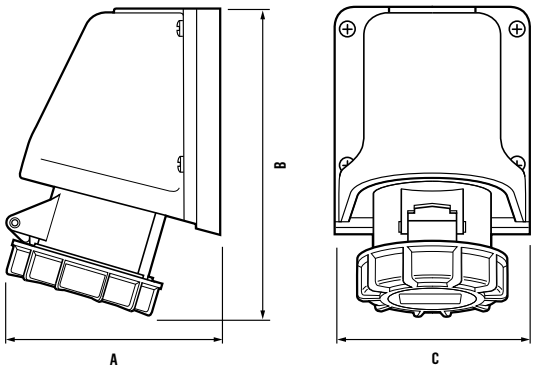

## ANGLED PANEL SOCKETS - IP67

- Complete with gasket

| Code | Ref No. | Voltage | Poles | Pins | A [mm] | B [mm] | C [mm] | D [mm] |
|---|---|---|---|---|---|---|---|---|
| **16 Amp** | | | | | | | | |
| 2073-6730 | CXN163P110PA67 | 110V | 2P+E | 3 | 86.5 | 75.5 | 38.5 | 48.5 |
| 2073-6748 | CXN163P240PA67 | 240V | 2P+E | 3 | 86.5 | 75.5 | 38.5 | 48.5 |
| 2073-6763 | CXN164P415PA67 | 415V | 3P+E | 4 | 86.5 | 75.5 | 38.5 | 50 |
| 2073-6778 | CXN165P415PA67 | 415V | 3P+N+E | 5 | 86.5 | 75.5 | 38 | 52 |
| **32 Amp** | | | | | | | | |
| 2073-6790 | CXN323P110PA67 | 110V | 2P+E | 3 | 86.5 | 75.5 | 50 | 53.5 |
| 2073-6805 | CXN323P240PA67 | 240V | 2P+E | 3 | 86.5 | 75.5 | 50 | 53.5 |
| 2073-6823 | CXN324P415PA67 | 415V | 3P+E | 4 | 86.5 | 75.5 | 50 | 53.5 |
| 2073-6838 | CXN325P415PA67 | 415V | 3P+N+E | 5 | 90 | 80 | 48 | 57 |

CXN163P110PA67

CXN323P240PA67

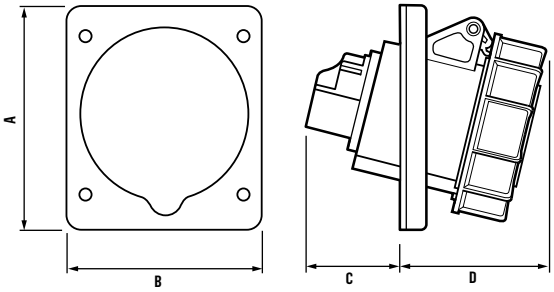

CXN325P415PA67

CXN164P415PA67

## STRAIGHT PANEL SOCKETS - IP67

- Complete with gasket

| Code | Ref No. | Voltage | Poles | Pins | A [mm] | B [mm] | C [mm] |
|---|---|---|---|---|---|---|---|
| **16 Amp** | | | | | | | |
| 2073-6733 | CXN163P110PS67 | 110V | 2P+E | 3 | 75 | 25.8 | 54.5 |
| 2073-6751 | CXN163P240PS67 | 240V | 2P+E | 3 | 75 | 25.8 | 54.5 |
| 2073-6766 | CXN164P415PS67 | 415V | 3P+E | 4 | 75 | 26.3 | 54.5 |
| 2073-6781 | CXN165P415PS67 | 415V | 3P+N+E | 5 | 75 | 25 | 56 |
| **32 Amp** | | | | | | | |
| 2073-6796 | CXN323P110PS67 | 110V | 2P+E | 3 | 75 | 29.2 | 64.5 |
| 2073-6811 | CXN323P240PS67 | 240V | 2P+E | 3 | 75 | 29.2 | 64.5 |
| 2073-6826 | CXN324P415PS67 | 415V | 3P+E | 4 | 75 | 29.2 | 64.5 |
| 2073-6841 | CXN325P415PS67 | 415V | 3P+N+E | 5 | 75 | 29.8 | 65.5 |

CXN163P110PS67

CXN163P240PS67

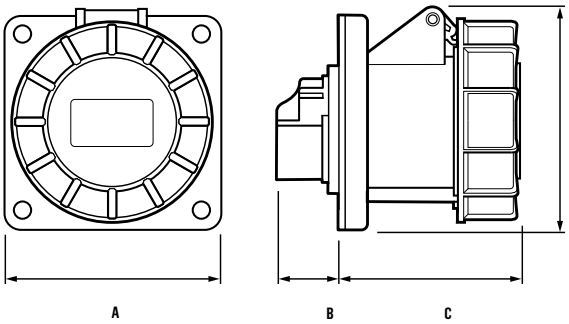

CXN325P415PS67

CXN324P415PS67

## 3-WAY SPLITTER UNITS - IP67

A range of 16 Amp, IP44 rated 3-Way Splitters, all conform to EN 60309-1/2 (BS4343).

| Code | Ref No. | Voltage | Poles | Pins | Complete with Cable |
|---|---|---|---|---|---|
| 16 Amp | | | | | |
| 1477-7521 | CX163P110YS | 110V | 2P+E | 3 | No |
| 1488-7171 | CX163P110YSL | 110V | 2P+E | 3 | Yes |
| 1488-1066 | CX163P240YS | 240V | 2P+E | 3 | No |
| 1488-7180 | CX163P240YSL | 240V | 2P+E | 3 | Yes |

CX163P110YS

CX163P240YSL

## 3-WAY SPLITTER UNITS - IP67

A range of 16 Amp, IP67 rated 3-Way Splitters, all conform to EN 60309-1/2 (BS4343).

| Code | Ref No. | Voltage | Poles | Pins | Complete with Cable |
|---|---|---|---|---|---|
| 16 Amp | | | | | |
| 1488-7168 | CX163P110YS/IP67 | 110V | 2P+E | 3 | No |
| 1488-7174 | CX163P110YSL/IP67 | 110V | 2P+E | 3 | Yes |
| 1488-7177 | CX163P240YS/IP67 | 240V | 2P+E | 3 | No |
| 1488-7183 | CX163P240YSL/IP67 | 240V | 2P+E | 3 | Yes |

CX163P240YS-IP67

CX163P110YSL-IP67

## ADAPTOR

| Code | Ref No. | Description |
|---|---|---|
| 16 Amp | | |
| 0141-7594 | 6.8216.UK | 2P+E 240V BS4343 to 13A 3 Pin 240V BS1363 |

## EXTENSION LEADS - IP44

- Ideal for industrial on site applications
- Arctic grade cable
- Fitted with 16A 2P+E plug and coupler

| Code | Ref No. | Voltage | Poles | Pins | L [m] | Dia [mm] |
|---|---|---|---|---|---|---|
| **16 Amp** | | | | | | |
| 0013-7494 | SEL1415 240V | 240V | 2P+E | 3 | 14 | 1.5 |
| 0013-7500 | SEL1425 240V | 240V | 2P+E | 3 | 14 | 2.5 |

SEL1415 240V

SEL1425 240V

## PLUGS - IP44

- High-impact thermoplastic housing
- Colour coded
- Terminal identification
- Shrouded pins
- Retaining device
- Splashproof IP44

| Code | Ref No. | Voltage | Poles | Pins | L [mm] | Dia [mm] |
|---|---|---|---|---|---|---|
| **16 Amp** | | | | | | |
| 0013-2943 | 210304 | 110V | 2P+E | 3 | 143 | 51 |
| 0013-2949 | 210306 | 240V | 2P+E | 3 | 143 | 51 |
| 0013-2988 | 211306 | 240V | 2P+E | 3 | 143 | 51 |
| 0013-2961 | 210406 | 415V | 3P+E | 3 | 150 | 65 |
| 0048-8353 | 211406 | 415V | 3P+E | 3 | 150 | 65 |
| 0013-2940 | 210 | 415V | 3P+E | 3 | 150 | 65 |
| **32 Amp** | | | | | | |
| 0013-3057 | 230304 | 110V | 2P+E | 3 | 173 | 72 |
| 0013-3060 | 230306 | 240V | 2P+E | 3 | 173 | 72 |
| 0102-3478 | 231306 | 240V | 2P+E | 3 | 173 | 72 |
| 0013-3069 | 230406 | 415V | 3P+E | 4 | 173 | 72 |
| 0013-3054 | 230 | 415V | 3P+N+E | 5 | 174 | 72 |
| **63 Amp** | | | | | | |
| 0013-3147 | 269 | 415V | 3P+N+E | 5 | 243 | 110 |

210304

269

230306

## COUPLERS - IP44

- High-impact thermoplastic housing
- Colour coded
- Terminal identification
- Recessed contacts
- Spring-loaded cover
- Splashproof IP44

| Code | Ref No. | Voltage | Poles | Pins | L [mm] | Dia [mm] |
|---|---|---|---|---|---|---|
| **16 Amp** | | | | | | |
| 0013-3243 | 310304 | 110V | 2P+E | 3 | 154 | 51 |
| 0013-3249 | 310306 | 240V | 2P+E | 3 | 154 | 51 |
| 0102-3481 | 311306 | 240V | 2P+E | 3 | 154 | 51 |
| 0013-3258 | 310406 | 415V | 3P+E | 4 | 165 | 65 |
| 0013-3240 | 310 | 415V | 3P+N+E | 5 | 165 | 65 |
| 0013-3267 | 311 | 415V | 3P+N+E | 5 | 165 | 65 |
| **32 Amp** | | | | | | |
| 0013-3297 | 330304 | 110V | 2P+E | 3 | 189 | 72 |
| 0013-3300 | 330306 | 240V | 2P+E | 3 | 189 | 72 |
| 0013-3306 | 330406 | 415V | 3P+E | 4 | 189 | 72 |
| 0013-3294 | 330 | 415V | 3P+N+E | 5 | 189 | 72 |
| **63 Amp** | | | | | | |
| 0013-3345 | 369 | 415V | 3P+N+E | 5 | 255 | 110 |

310304

310406

330306

## WALL MOUNTED SOCKETS - IP44

- High-impact thermoplastic housing
- Colour coded
- Terminal identification
- Recessed contacts
- Spring-loaded cover
- External fixing
- Splashproof IP44

| Code | Ref No. | Voltage | Poles | Pins | L [mm] | W [mm] | D [mm] |
|---|---|---|---|---|---|---|---|
| **16 Amp** | | | | | | | |
| 0013-2760 | 110304 | 110V | 2P+E | 3 | 120 | 60 | 75 |
| 0013-2763 | 110306 | 240V | 2P+E | 3 | 120 | 60 | 75 |
| 0013-2802 | 111306 | 240V | 2P+E | 3 | 120 | 60 | 75 |
| 0013-2772 | 110406 | 415V | 3P+E | 4 | 128 | 74 | 86 |
| 0001 -2757 | 110 | 415V | 3P+N+E | 5 | 128 | 74 | 86 |
| **32 Amp** | | | | | | | |
| 0013-2838 | 130304 | 110V | 2P+E | 3 | 154 | 82 | 103 |
| 0013-2856 | 131306 | 240V | 2P+E | 3 | 154 | 82 | 103 |
| 0013-2841 | 130306 | 240V | 2P+E | 3 | 154 | 82 | 103 |
| 0013-2847 | 130406 | 415V | 3P+E | 3 | 154 | 82 | 103 |
| 0013-2835 | 130 | 415V | 3P+N+E | 5 | 155 | 82 | 105 |

310304

111306

130

## NOTES

## NOTES

MCG INDUSTRIAL

Unit 1, Railway Court, Ten Pound Walk, Doncaster, South Yorkshire, DN4 5FB
Tel: +44 [0]1302 342 642
mcg.co.uk | mcg_industrial

MCGCAT04

5 025110 824907 >

© MCG 2025 - E&OE Errors and Omissions excepted

MCG1070/02.25