Technical Note No. 0074

Installing LP® SmartSide® 38 Series Panel Siding or Trim over Concrete or Masonry Walls

This Technical Note is an addendum to the LP® SmartSide® and LP® SmartSide® ExpertFinish® Panel Siding Application Instructions, and the LP® SmartSide® Trim and Fascia Application Instructions. Refer to LP® SmartSide® Panel Siding and LP® SmartSide® Trim and Fascia Application Instructions for all other product installation details.

Panel siding and trim installed over concrete or masonry walls:

- Non-Compressible Drainable Housewrap (NCDH) is required behind panel siding and trim installed over concrete or masonry walls.
  - Refer to Technical Bulletin #0031 for definition of NCDH.
  - Examples of available NCDH include, but not limited to:
    - Benjamin Obdyke HydroGap® Drainable Housewrap
    - TamlynWrap® Drainable Housewrap
  - Attach NCDH to concrete or masonry walls per manufacturer's instructions, or use min. 3/8 inch (10 mm) long "stub nail".
  - Properly tape and/or seal wall penetrations in accordance with the NCDH manufacturer's instructions.
- Concrete or masonry wall construction must comply with applicable building codes.
- When installing panel siding or trim directly to concrete masonry units (CMU), the CMU's must comply with ASTM C 90.

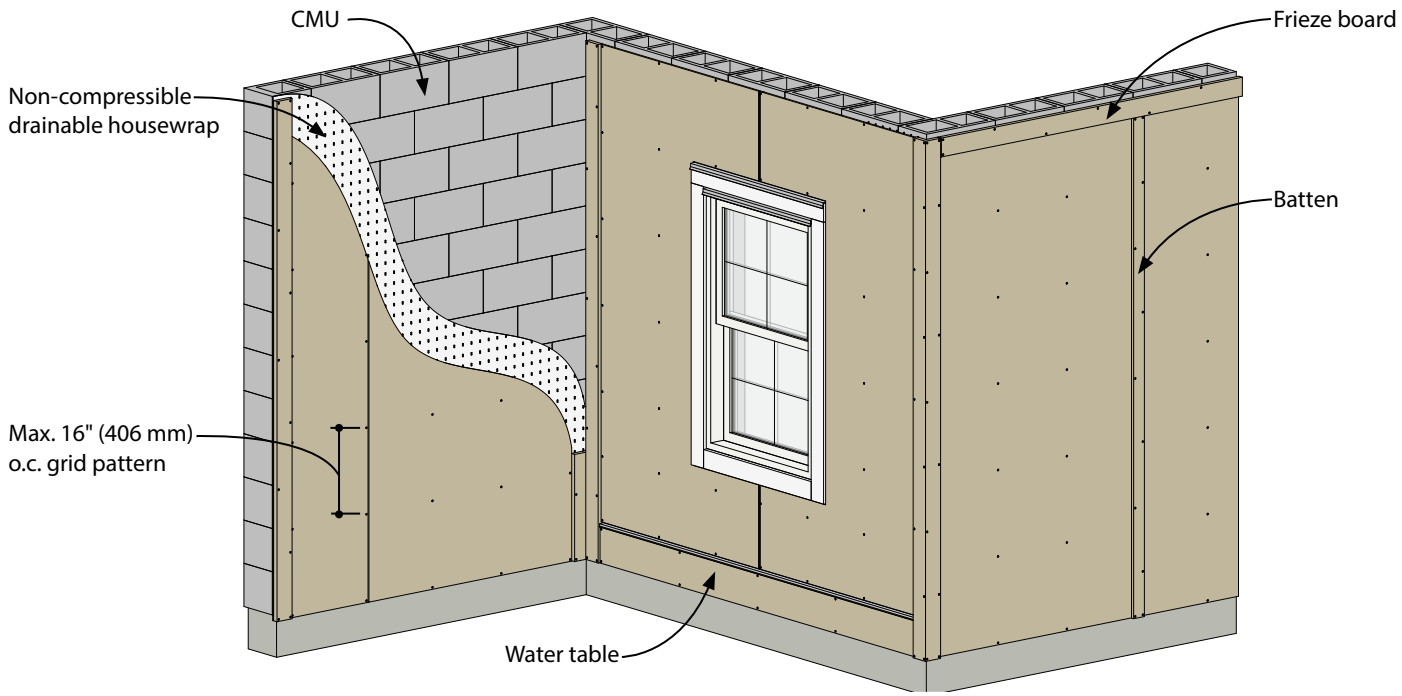

Figure 1a

ADDRESS 1610 West End Ave.
Suite 200
Nashville, TN
TEL 888-820-0325
WEB lpcorp.com

Date Created: 11-24-26
Last Revision:

Panel:

- Fasteners must be suitable for concrete or masonry applications as specified by the fastener manufacturer.
- Minimum Fastener Specifications:
  - Min. Length = 1.25 inches (32 mm)
  - Use a min. 0.140 inch (4 mm) shank diameter with a head diameter of 0.300 inch (7.62 mm), hot-dip galvanized nail (ASTM A153) or equivalent; capable of preventing rust, stain and deterioration under normal outdoor environmental conditions for a period of no less than 50 years.
- Commonly used concrete or masonry fasteners include, but not limited to:
  - Aerosmith Fastening® PowerPin® 5323HPG PT2000 plating, head diameter 0.300 inch (8 mm) x shank diameter 0.145 inch (4 mm) x length 1.25 inches (32 mm), smooth shank.
- Square edge panel siding installed in a 16 inch (406 mm) o.c. grid pattern is limited to 160 mph Exp. B, 140 mph Exp. C, and 130 mph Exp. D wind speed areas or less. (Figure 3a)
- Square edge panel siding installed in a 12 inch (305 mm) o.c. grid pattern is limited to 200 mph Exp. B, 180 mph Exp. C, and 170 mph Exp. D wind speed areas or less. (Figure 3b)
- Fasteners should be a min. of 3/8 inch (10 mm) from the edges and ends of the panel. (Figure 2a, 2b)
- Avoid overdriven fasteners.
- Leave a min. 1/8 inch (3 mm) expansion joint at all butt joints. (Figure 2a, 2b)

Square Edge Panel

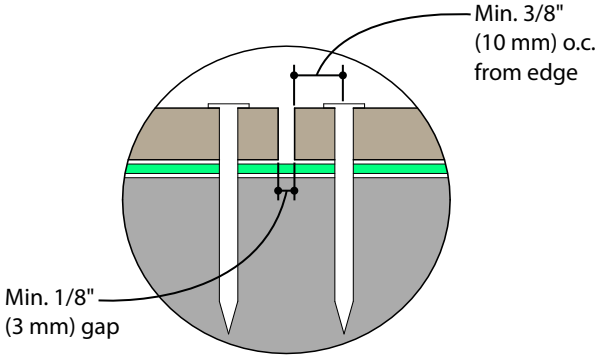

Figure 2a

Square Edge Panel with Batten

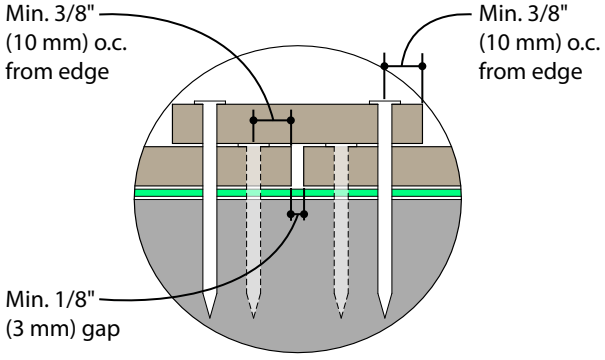

Figure 2b

ADDRESS 1610 West End Ave.
Suite 200
Nashville, TN
TEL 888-820-0325
WEB lpcorp.com

Date Created: 11-24-26
Last Revision:

Trim:

- Fasteners must be suitable for concrete or masonry applications as specified by the fastener manufacturer.
- Minimum fastener specifications
  - Min. length = 1.75 inches (45 mm)
  - Use a min. 0.140 inch (4 mm) shank diameter with a head diameter of 0.300 inch (7.62 mm), hot-dip galvanized nail (ASTM A153) or equivalent; capable of preventing rust, stain and deterioration under normal outdoor environmental conditions for a period of no less than 50 years.
- Commonly used concrete or masonry fasteners include, but not limited to:
  - Aerosmith Fastening® PowerPin® 5454HPG PT2000 plating, head diameter 0.300 inch (8 mm) x shank diameter 0.145 inch (4 mm) x length 1.75 inches (45 mm), smooth shank
- Fasteners should be a min. of 3/8 inch (10 mm) from the edges and ends of the panel. (Figure 2b)
- Avoid overdriven fasteners.

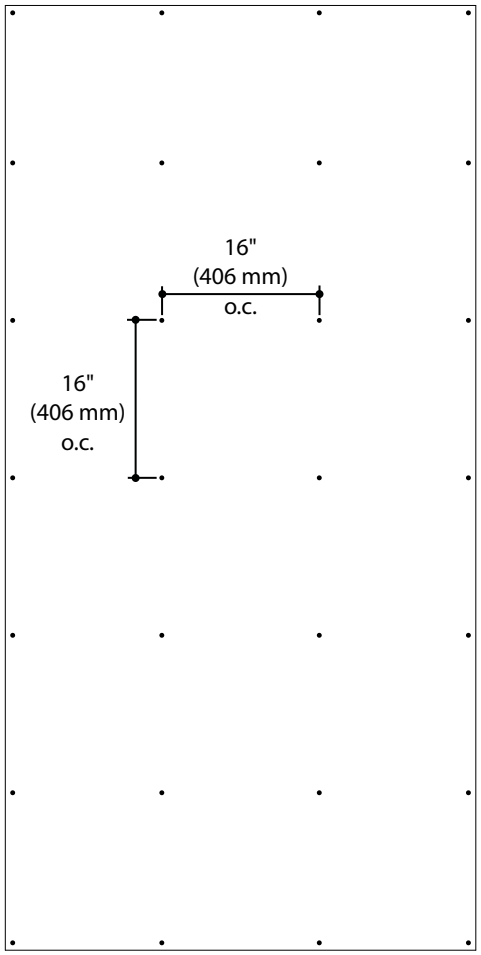

16" x 16" Grid Pattern

16" (406 mm) x 16" (406 mm) o.c.
28 nails total

Figure 3a

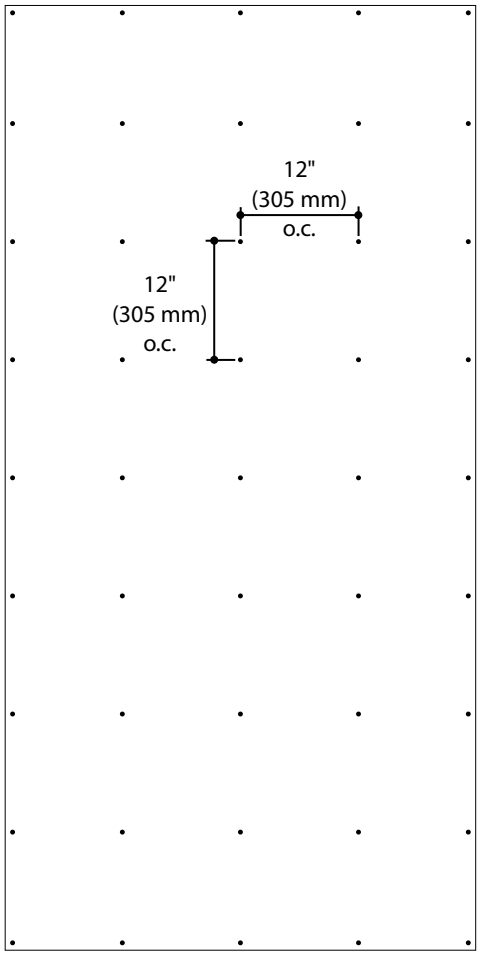

12" x 12" Grid Pattern

12" (305 mm) x 12" (305 mm) o.c.
45 nails total

Figure 3b

© 2026 Louisiana-Pacific Corporation. All rights reserved. All trademarks are owned by Louisiana-Pacific Corporation.

Date Created: 11-24-26
Last Revision:

ADDRESS 1610 West End Ave.
Suite 200
Nashville, TN
TEL 888-820-0325
WEB lpcorp.com