LP SmartSide® TRIM & SIDING

38, 76 AND 190 SERIES CEDAR TEXTURE, BRUSHED SMOOTH PRIMED VENTED AND NON-VENTED SOFFIT

LOUISIANA-PACIFIC CORPORATION PERIODICALLY UPDATES AND REVISES ITS PRODUCT INFORMATION AND APPLICATION, CARE, AND MAINTENANCE INSTRUCTIONS. WARRANTY REMEDIES ARE NOT AVAILABLE IF THESE INSTRUCTIONS ARE NOT FOLLOWED. THE INFORMATION IN THIS DOCUMENT IS SUBJECT TO CHANGE WITHOUT NOTICE.

FIND ALL LP® SMARTSIDE® PRODUCT LITERATURE AT LPCORP.COM/PRODUCT-LITERATURE

LP® SmartSide® Soffit is covered under the LP® SmartSide® Prorated 50-Year Limited Warranty. Refer to limited warranty at lpcorp.com/product-literature for complete details, including important limitations and exclusions. Product must be transported, stored, handled, installed, finished, and maintained in accordance with all published application, finishing, care, and maintenance instructions, technical notes, and bulletins (collectively, "Instructions") in effect at the time of installation.

Failure to follow such Instructions will make the limited warranty inapplicable as to the products affected by such failure. No modification or exception to these Instructions and no non-published recommendations are valid unless issued in writing on a project-specific basis by LP's Sr. Director of Technology prior to application. Always check and comply with local building codes. Even where these instructions approve installation over certain substrates or incorporate requirements of building codes, LP's liability for the performance of the product is limited as expressly provided in the Limited Warranty.

⚠ WARNING: Drilling, sawing, sanding or machining wood products can expose you to wood dust, a substance known to the State of California to cause cancer. Avoid inhaling wood dust or use a dust mask or other safeguards for personal protection. For more information go to www.P65Warnings.ca.gov/wood-dust.

PRODUCT LEGEND

- A LP® SmartSide® Lap Siding
- B LP® SmartSide® Panel Siding
- C LP® SmartSide® Vertical Siding
- D LP® SmartSide® Cedar Shake
- E LP® SmartSide® Trim & Fascia
- F LP® SmartSide® Soffit
- G LP® SmartSide® Accessories
- H LP® SmartSide® Nickel Gap Siding

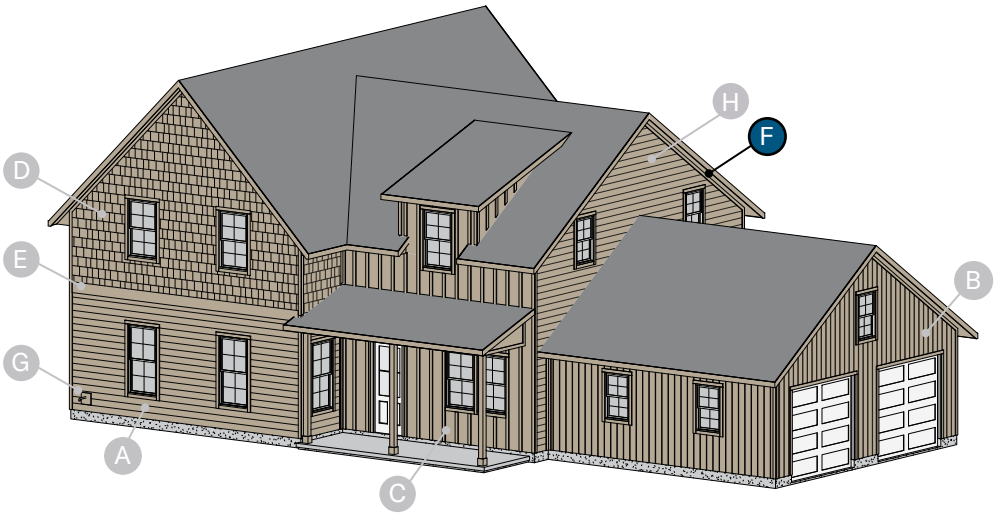

GENERAL INFORMATION

HANDLING

- Handle soffit with care during storage, temporary placement, and application.

STORAGE

- Store soffit:
  - Under a roof or waterproof covering (like unit cover/bonnet).
  - Off the ground, on a flat-drained surface using supports that provide a min. 1-1/2 inches (38 mm) clearance from surface.
    - This includes when staging siding around jobsite during installation.
- LP is not responsible for damage due to improper handling and storage of the siding.

Soffit Panel
Figure 1a

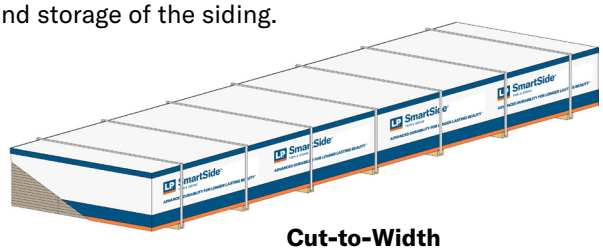

Cut-to-Width Soffit
Figure 1b

General Information (Cont'd.)

Before You Begin

- At the time of manufacture, soffit has achieved code recognition by APA in accordance with PR-N117 as RATED SHEATHING-CEILING DECK (RS-CD). For copies of product approvals go online at lpcorp.com/product-literature or call LP Customer Support at 1-888-820-0325.
- Space ends and edges a min. 3/16 inch (5 mm) where soffit is adjacent to other building materials and apply sealant (caulk). (Figure 2a)
  - Exception: Soffit panel applied in an open soffit application.
  - Exception: Trim, frieze board or siding may lightly touch soffit. (Figure 9a)
- Ends and edges must be supported. Additional 2x blocking may need to be installed for larger soffit widths.
  - Complete perimeter 2x framing support is required for all soffit.
- Soffit must not be in direct contact with masonry, concrete, brick, stone, stucco or mortar. Provide a min. 3/8 inch (10 mm) gap and fill with backer rod and sealant. (Figure 2b)
- Do not use staples.
  - Exception: Refer to **Alternate Fastening Options - Staples in Open Soffit Applications** on page 9.

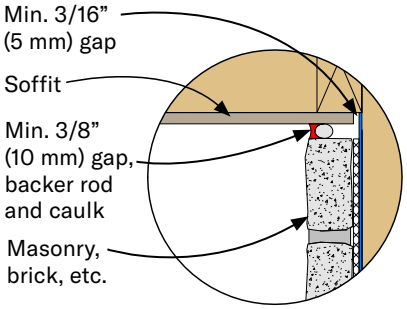

Open Soffit
Figure 2b

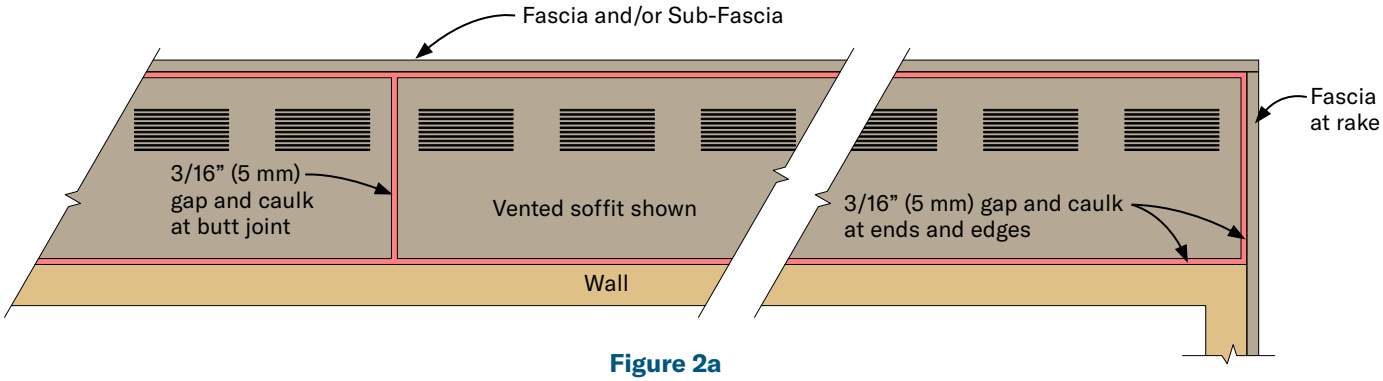

Figure 2a

Limitations

- LP® SmartSide® Soffit products are not designed for and are not suitable for use as siding.
  - Exception: Dual Use Soffit/Siding products APA Trademark stamped both **CUSTOM PRODUCT - SOFFITS** and **RATED SIDING - SHEATHING** may be used in siding applications.
- Soffit is available in cut-to-width (CTW) options in 12 inch (305 mm), 16 inch (406 mm) and 24 inch (610 mm) widths.
  - CTW soffit is available in vented and non-vented options. (Figure 2c. 2d)
  - Do not apply CTW soffit in open soffit applications.
- 76 and 190 Series 4 feet wide soffit panels carry both **CUSTOM PRODUCT - SOFFITS** and **RATED SHEATHING - CEILING DECK** (RS-CD) APA Trademark stamps for soffit applications. (Figure 2e)
  - Soffit panel carrying an RS-CD trademark stamp can be used in an open soffit application as roof sheathing.
    - Install primed soffit surface facing down toward open framing.

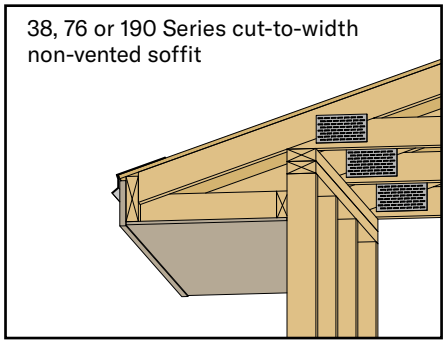

Closed Soffit
Figure 2c

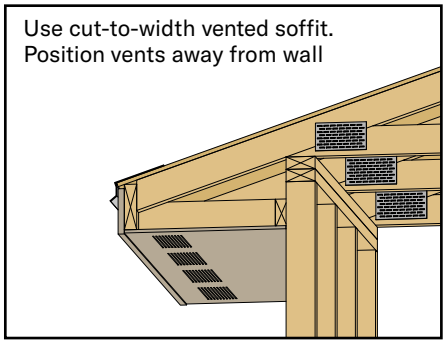

Closed - Vented Soffit
Figure 2d

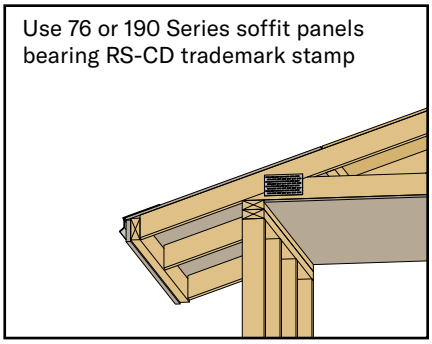

Open Soffit
Figure 2e

Installation

Fastening Instructions

- **Fastener:** Use a min. 0.092 inch shank diameter, hot-dip galvanized nail (ASTM A153) or equivalent; capable of preventing rust, stain and deterioration under normal outdoor environmental conditions for a period of no less than 50 years.
  - A larger shank diameter nail may be required depending on the wind pressure, wind speed and wind exposure category limitations outlined in PR-N117.
- **Fastener placement and length:** (Figure 3a)
  - Place nails a min. 3/8 inch (10 mm) from ends and edges.
  - For **vented** soffit, refer to Table 1 in PR-N117 for nail length requirements.
  - For **non-vented** soffit, refer to Table 2 in PR-N117 for nail length requirements.
- **Fastener spacing:** Max. 6 inches (152 mm) o.c. along perimeter and max. 12 inches (305 mm) o.c. along intermediate supports. (Figures 3c, 3e)
  - A tighter field nailing pattern, or a longer nail may be required depending on the wind pressure, wind speed and wind exposure category limitations outlined in Tables 1 & 2 in PR-N117.
  - Exception: CTW soffit 12 inches (305 mm) wide or less do not require intermediate support. (Figures 3b)
- Nail from the center of the soffit toward the ends, or from one end to the other end.
  - **Do not** nail from each end toward the middle.
- Provide a min. 3/16 inch (5 mm) gap at butt joints. (Figure 3a)
  - Use spacing tool like SIMPLESIDER® siding gauge to achieve proper gapping.
- Attached soffit to min. 2x framing members**.**
- Butt joints must occur over wood 2x framing members.
  - Additional 2x wood blocking may be required.
- A max. of 24 inches (610 mm) o.c. intermediate support is required for soffit greater than 12 inches (305 mm) wide. (Figures 3d, 3e)
  - 24 inches (610 mm) o.c. intermediate support is **NOT** required for soffit 12 inches (305 mm) wide or less. (Figures 3b, 3c)
- Apply caulk at ends, edges and butt joints. (Figures 2a)

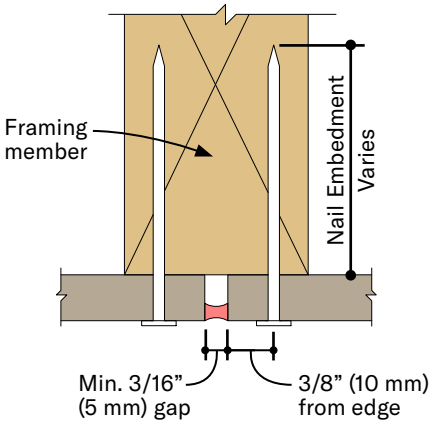

Figure 3a

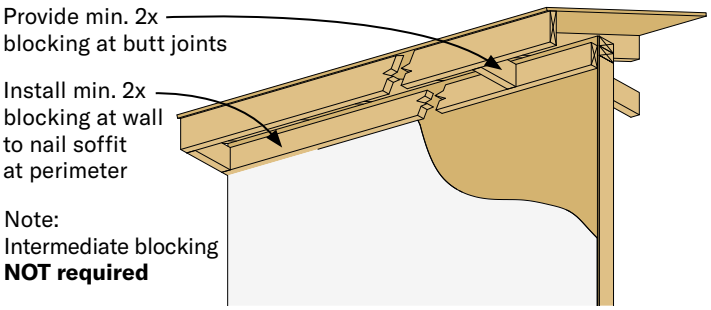

Soffit ≤ 12 inches (305 mm)

Figure 3b

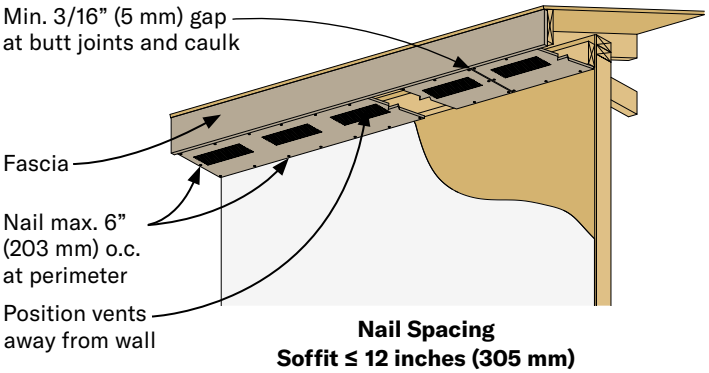

Nail Spacing
Soffit ≤ 12 inches (305 mm)

Figure 3c

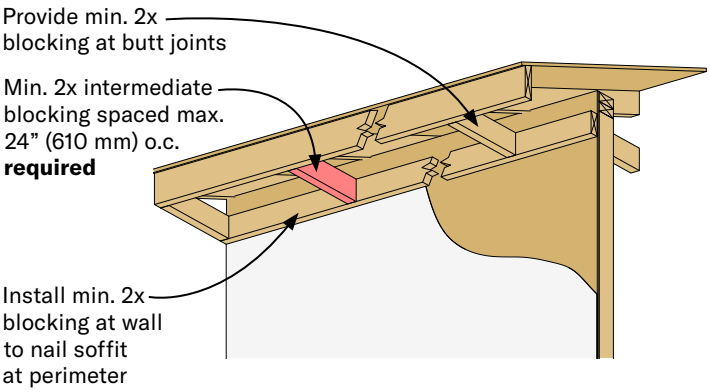

Soffit > 12 inches (305 mm)

Figure 3d

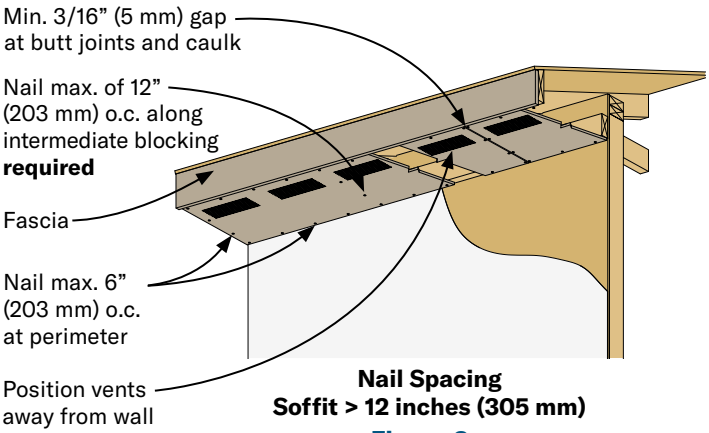

Nail Spacing
Soffit > 12 inches (305 mm)

Figure 3e

Installation (Cont'd.)

- Do not overdrive nails.
  - Nail head should seat snug to face of soffit, but not flush to distort the soffit surface.
  - Face nails: corrections are detailed in Figures 4e, 4f.
- Painting all exposed nail heads is recommended.

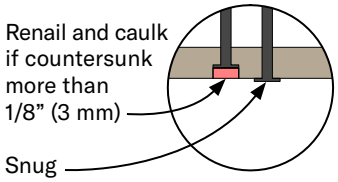

FACE NAILED CONDITION
Figure 4e

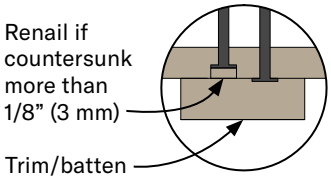

BLIND NAILED CONDITION
Figure 4f

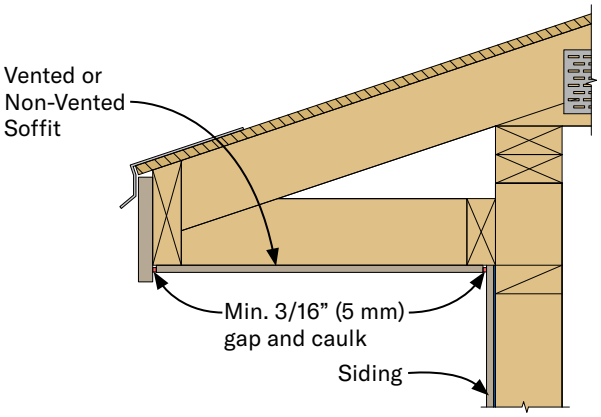

Closed Soffit - Section
Figure 4a

Closed Soffit

- CTW vented and non-vented soffit is recommended for closed soffit applications at eaves/overhangs or rakes. (Figures 4a)
- If field cut (ripping) is required, remove 3/8 inch (10 mm) less than full width of the eave/overhang to provide for a min. 3/16 inch (5 mm) gap on along edges.

Open Soffit

- 76 and 190 Series soffit panels APA Trademark stamped RS-CD may be installed prefinished side face down toward open framing as the first row of roof sheathing. (Figure 4c)
  - Install soffit panel with the long dimension or strength axis perpendicular to the rafters, supported along all four edges by framing or solid 2x intermediate blocking.
  - Provide min. 2x intermediate blocking between the rafters so you can nail the soffit to the blocking. (Figure 4b)
  - Leave a min. 1/8 inch (3 mm) space between the edges and ends of the panel.
  - Space nails a max. of every 6 inches (152 mm) o.c. along the perimeter and max. 12 inches (305 mm) o.c. along intermediate supports, unless an enhanced nailing pattern is required by local building code.
  - Protect ends and edges of soffit against exposure to the weather.
  - **Do not use 38 Series soffit for open soffit applications.**

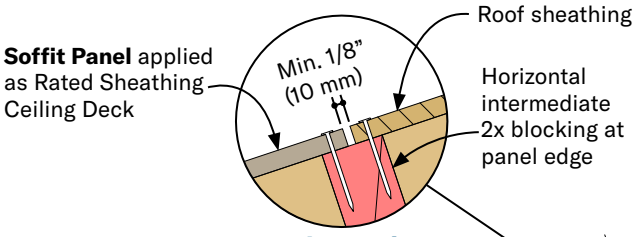

Figure 4b

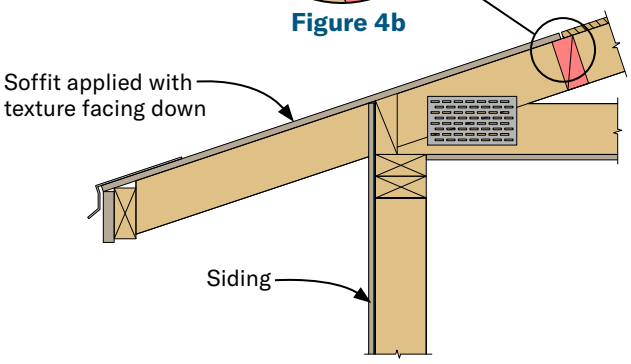

Open Soffit - Section
Figure 4c

Porch Ceilings

- Soffit may be used as porch ceilings. (Figure 4d)
  - Install soffit panel with the long dimension or strength axis perpendicular to the ceiling joists, and supported along all four edges by framing or solid 2x blocking.
  - Provide min. 2x intermediate blocking to fasten soffit at panel edges.
  - Provide min. 3/16 inch (5 mm) gap at panel ends and edges.
  - Space nails a max. of every 6 inches (152 mm) o.c. along the perimeter and max. 12 inches (305 mm) o.c. along intermediate blocking.
  - Battens (trim) may be applied over panel seams at ceiling.

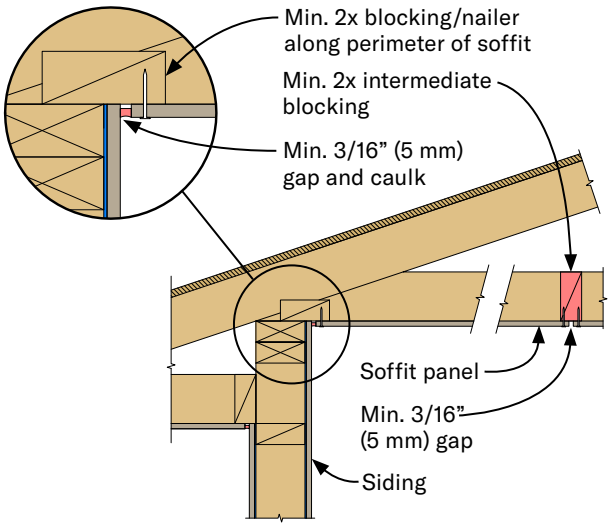

Soffit Panel at Porch Ceiling
Figure 4d

Installation (Cont'd.)

Vented Cut-to-Width Soffit

- Vented CTW soffit is available in 10 square inches (6 452 mm) of ventilation per linear foot. (Figure 5a)
- Exhaust ducts shall terminate not less than 3 feet (914 mm) in any direction from soffit vents. Non-vented soffit may be use to create 3 feet (914 mm) separation of vents from exhaust duct terminations. Check your local building code for requirements.
- When cutting soffit with a circular saw, orient the primed face down, fully support and brace to reduce vibration.
- Layout and install vented soffit in a manner that eliminates the need to cut through the vents. (Figure 5c)
- The spokes within the vent may distort slightly during equilibration with the local environment. This condition is temporary and the spokes will straighten.
- All CTW soffit vents measure approximately 8 inches (203 mm) x 3-1/2 inches (89 mm) wide. (Figure 5d)

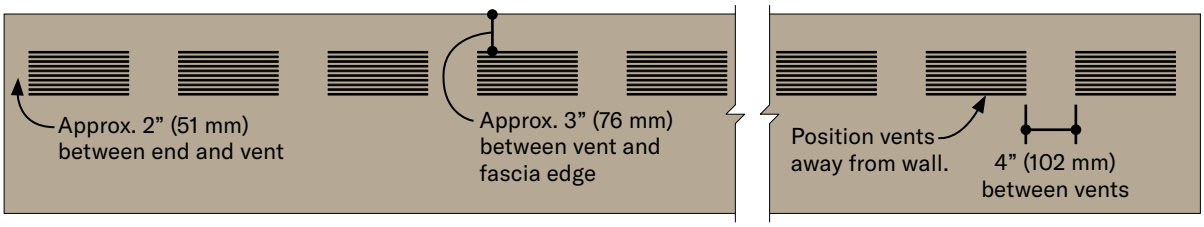

10 sq. inches of ventilation = 16 vents per 16' (4 877 mm) piece spaced 12" (305 mm) apart

Figure 5a

- **Vented Corner with Square-Cut Ends:** (Figure 5d)
  Run vented CTW soffit to corner, do not cut through vents.
  - Do not make diagonal cuts through the vents. (Figure 5c)
- **Non-Vented Corner with Square-Cut Ends:** (Figure 5e)
  You may use both vented or non-vented soffit or a combination of both in your design.
- **Non-Vented Corner with Diagonal-Cut Ends:** (Figure 5f)
  The diagonal joint must be supported by framing and properly fastened.

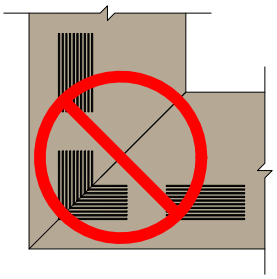

Do Not Cut Through Vents
Figure 5c

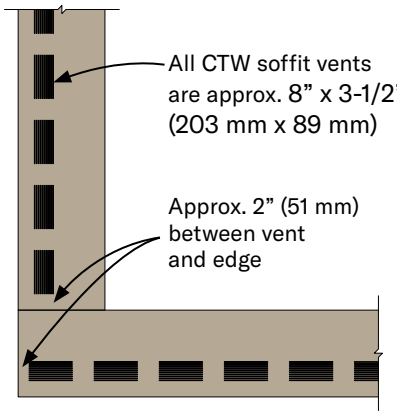

Vented Soffit at Corner
PREFERRED
Figure 5d

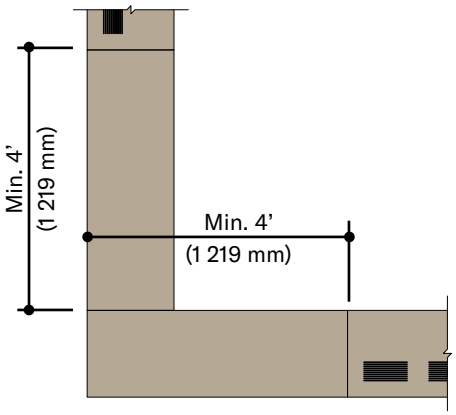

Non-Vented Soffit at Corner
PREFERRED
Figure 5e

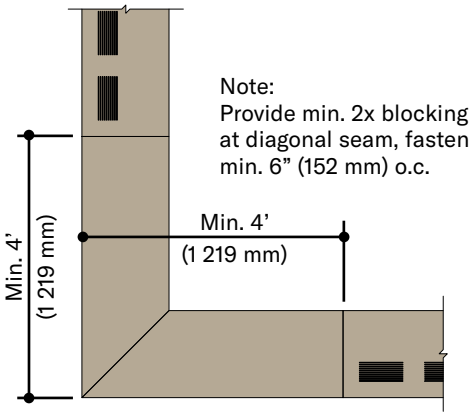

Diagonal-Cut End at Corner
ALTERNATIVE
Figure 5f

Fire-Rating

- LP® SmartSide® soffit may be installed over the exterior portion of a 1-hour fire-rated exterior soffit assembly.

LP® SmartSide® Soffit with LP® SmartSide® Ploughed Fascia

- LP SmartSide Ploughed Fascia is a trim product where the back side is factory routed out to receive soffit. (Figure 6a, 6b)
- Applying LP SmartSide Soffit with LP SmartSide Ploughed Fascia is designed for closed soffit applications only.
  - The ploughed groove in the fascia receives the outside edge of the soffit.
  - You must still maintain a min. 3/16 inch (5 mm) space around all other ends and edges of the soffit, and apply caulk.
  - Before installing, be sure that the soffit framing is straight, square and level.
  - Fasten ploughed fascia meeting the specifications in the LP SmartSide Trim and Fascia Application Instructions.

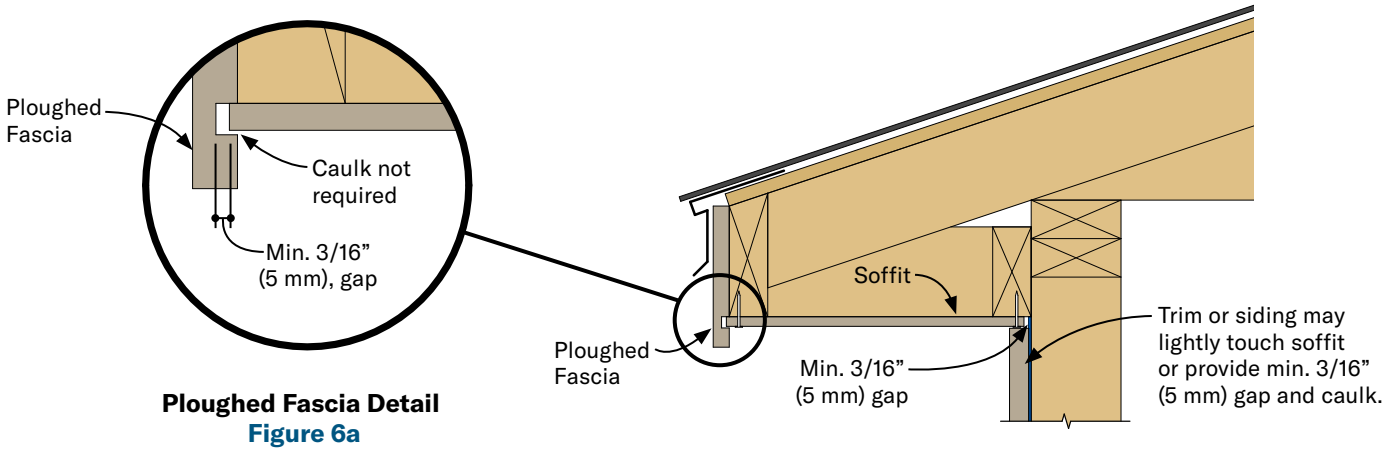

Ploughed Fascia Detail
Figure 6a

Ploughed Fascia
Figure 6b

Alternate - Panel Siding as Porch Ceilings

Fastening Instructions

- Penetrate framing a min. of 1-1/2 inches (38 mm).
  - Fasten panel siding using a min. 6 and 12 nailing pattern. This requires one fastener every 6 inches (152 mm) o.c. along the perimeter and 12 inches (305 mm) o.c. in the field.
- A tighter nail pattern of 6 and 6, or a longer nail embedment of 2 inches (51 mm), may be required depending on the wind pressure, wind speed and wind exposure category limitations in PR-N124.
- Panel siding may be applied in porch ceiling applications.
  - Limitation: 190 Series panel siding spanning ceiling joists or trusses spaced a max. 24 inches (610 mm) o.c.
  - Limitation: 38 and 76 Series panel siding spanning ceiling joists or trusses spaced a max. 16 inches (406 mm) o.c.
- Panel siding with alignment bead will help create 1/8 inch (3 mm) gap at butt joint. (Figure 6c)
- Provide min. 1/8 inch (3 mm) gap at butt joint for panel siding without alignment bead and square edge panel siding. (Figures 6d, 6e)
- Leave min. 3/16 inch (5 mm) gap at all ends and edges. (Figures 2a)

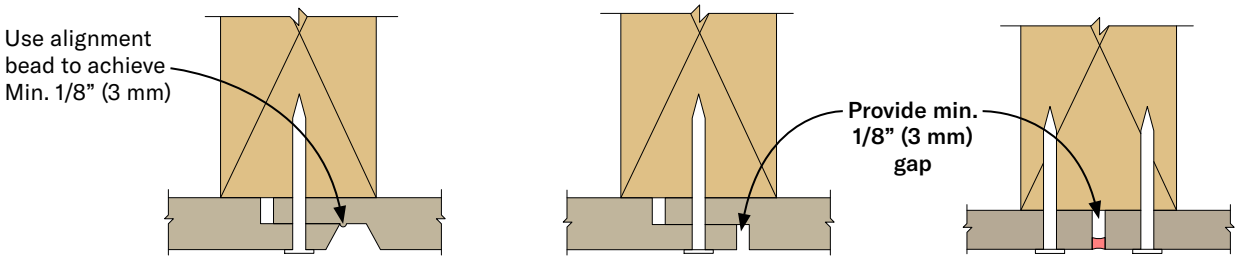

Shiplap Edge with Alignment Bead
Figure 6c

Shiplap Edge without Alignment Bead
Figure 6d

Square Edge
Figure 6e

Alternate - LP® SmartSide® Nickel Gap Siding as Porch Ceiling and Soffit

General Information

- LP SmartSide Nickel Gap Siding may be used for porch ceilings or soffit.
  - Nickel Gap Siding is not intended for open soffit as roof sheathing.

- Siding has been manufactured to remove a section of the flange located on the back of siding to accommodate flashing at the butt joint. Ensure this feature and factory prefinished ends are maintained on both sides of the butt joint. (Figure 7a)
  - Recommend using LP Nickel Gap metal flashing, field fabricated metal flashing or non-metal flexible flashing sheet at butt joint for aesthetic purposes.
  - Painting flashing helps to create a more consistent finished appearance, but is not required.

- Roof framing shall be a min. 2x member to obtain min. nail embedment.
  - 2x blocking may be required at ends and edges.

- Ends and edges adjacent to walls may lightly touch.
  - Caulk is not required at these locations.

- Ripping Nickel Gap siding lengthwise may be required when installing siding as porch ceiling or soffit.

- Gap siding a min. of 3/16 inch (5 mm) at butt joints.

- Butt joints must occur over min. 2x wood framing members.

- Spacing tools may be used to obtain 3/16 inch (5 mm) gap at butt joints. (Figure 7c)
  - SIMPLESIDER® siding gauge, or rafter square.

- The following tools may be used to work the siding into place to achieve a min. 1/16 inch (2 mm) to a max. 1/8 inch (3 mm) gap parallel to 16 foot (4 877 mm) length of the siding.
  - A pull bar typically used to install wood flooring, or
  - Create blocking tool by cutting a section of Nickel Gap siding to assist with firmly tapping siding into place, or
  - 2x wood stud, approx. 16 inches (406 mm) long to assist with firmly tapping siding into place.

- Siding nail requirements:
  - Install siding blind-nailed, place nail in fastener groove. (Figure 7d)
  - Use a min. 0.092 inch shank diameter, hot-dip galvanized (ASTM A153, Class D) or equivalent.
    - A larger 0.113 inch shank diameter nail may be required depending on limitations in PR-N117.
  - Fasten siding perpendicular to framing members spaced a max. 24 inches (610 mm) o.c.
    - Refer to Table 3 in PR-N117 for nail length requirements.
    - Refer to Table 3 in PR-N117 for shiplap edge nailing versus intermediate nailing requirements.
  - Nail head must be snug with flange, so it does not interfere with siding placement or flashing.

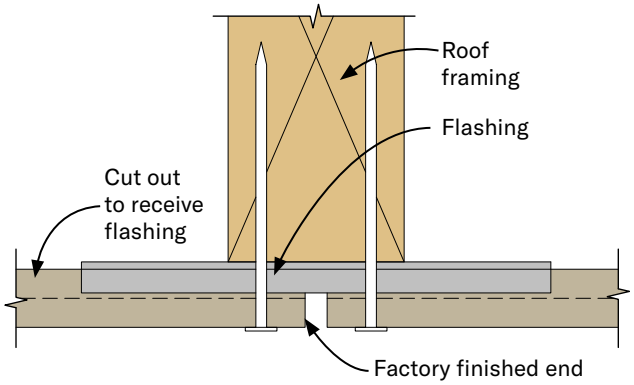

Butt Joint at Ceiling
Figure 7a

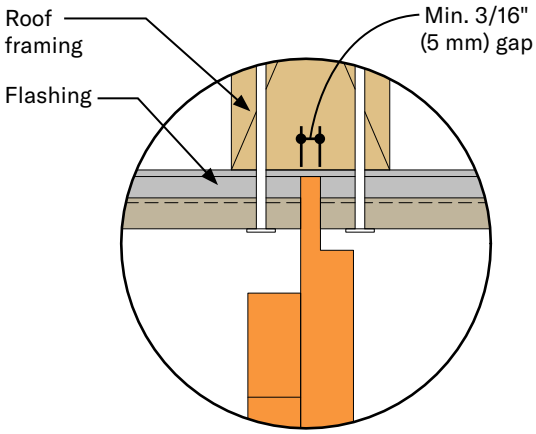

Use SIMPLESIDER® siding gauge or rafter square as spacing tool to achieve min. 3/16" (5 mm) gap

Spacing Tool at Butt Joint
Figure 7c

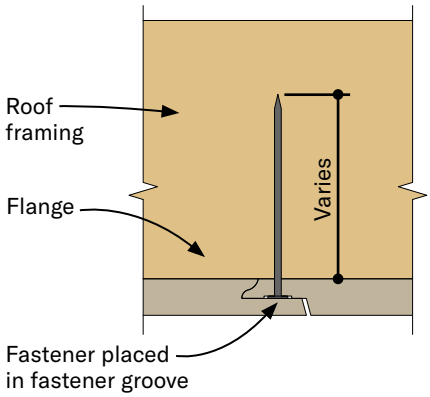

Fastener Groove
Figure 7d

Alternate - LP® SmartSide® Nickel Gap Siding as Porch Ceiling and Soffit (Cont'd.)

Porch Ceiling Installation

- Begin by installing Nickel Gap per Figure 8c working to the opposite end as shown in Figure 8b.
- Rip hidden shiplap edge (with fastener groove) when siding is adjacent to wall. (Figure 8b)
  - Ripped edge may lightly touch wall, or provide a min. 3/16 inch (5 mm) gap.
  - Face nail through full thickness a min. 3/8 inch (10 mm) from edge.
- Exposed shiplap edge may be installed adjacent to siding. (Figure 8c)
  - Nail through full thickness a min. 1 inch (25 mm) from edge of siding.
  - Shiplap edge may lightly touch siding, or provide a min. 3/16 inch (5 mm) gap and caulk, backer rod may be necessary.

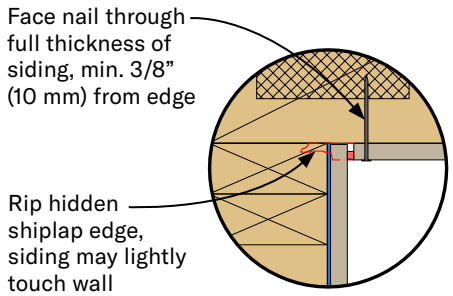

Hidden Shiplap Edge Detail
Figure 8b

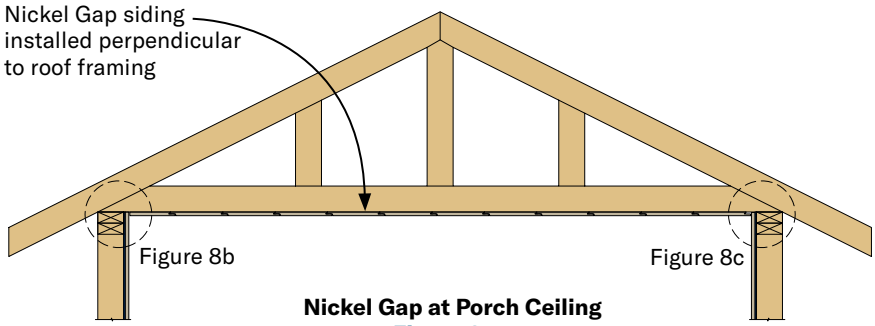

Nickel Gap at Porch Ceiling
Figure 8a

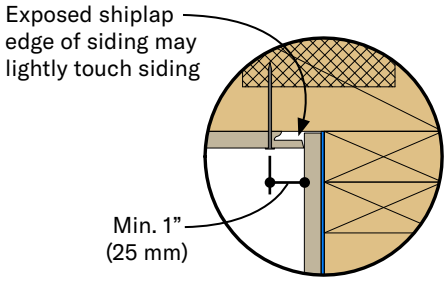

Exposed Shiplap Edge Detail
Figure 8c

Soffit Installation

- Intermediate nailing may be required depending on the wind pressure, wind speed and wind exposure category limitations in Table 3 in PR-N117. (Figures 8d, 8e)
- Nickel Gap may be installed as soffit. (Figures 8f, 8g)
  - Rip shiplap edge of siding pieces adjacent to wall, siding or fascia.
- Siding may be installed in conjunction with a continuous soffit vent. (Figure 8g)
  - Rip shiplap edge of siding pieces adjacent to vent.
- Paint ripped edges:
  - Edges may lightly touch at these locations, or
  - Provide a min. 3/16 inch (5 mm) gap.

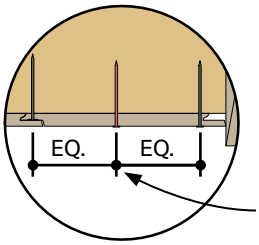

Non-Vented Soffit
Intermediate Nail Option
Figure 8d

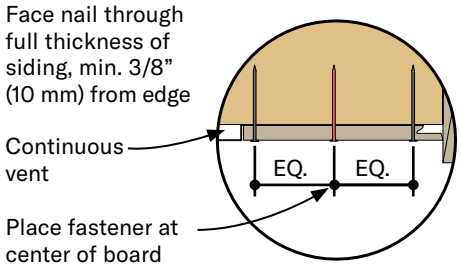

Continuous Vented Soffit
Intermediate Nail Option
Figure 8e

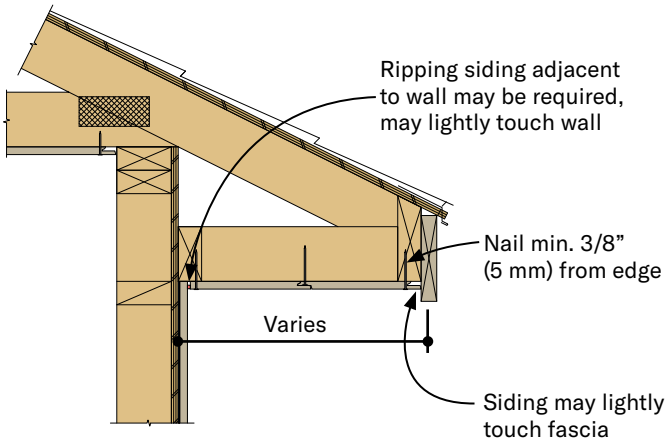

Non-Vented Soffit
Figure 8f

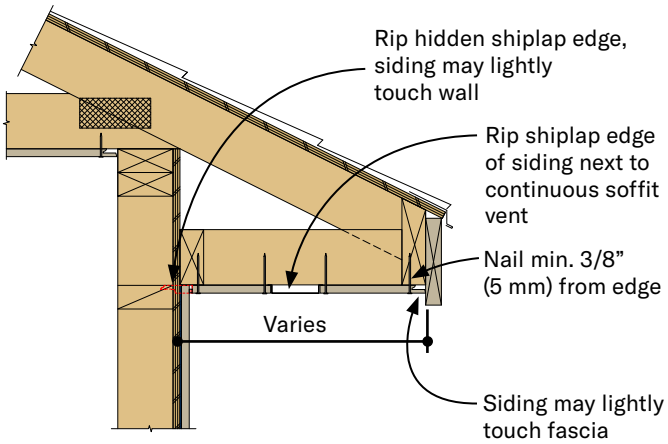

Continuous Vented Soffit
Figure 8g

Alternate Fastening Option- Staples in Open Soffit Applications

- Using staples to fasten 76 Series or 190 Series soffit is limited to open soffit applications when used as roof sheathing.
  - Refer to page 4 for open soffit application guidelines.
- Requirements for attaching soffit to roof framing are governed by local building code.
  - Soffit panel must be APA Trademark stamped RS-CD.
  - Refer to Table R602.3(2) – Alternate Attachments to Table R602.3(1) found in the International Residential Code.
  - 76 Series: use a min. 16 gauge staple, with a 7/16 inch (11 mm) crown, and a 1-3/4 inches (45 mm) leg
    - Space fastener a max. 3 inches (76 mm) o.c. at panel ends and 6 inches (152 mm) o.c. at intermediate supports.
  - 190 Series: use a min. 16 gauge staple, with a 7/16 inch (11 mm) crown, and a 2 inches (51 mm) leg
    - Space fastener a max. 4 inches (102 mm) o.c. at panel ends and 8 inches (203 mm) o.c. at intermediate supports.

Finishing Instructions

- When caulk is required, use a high-quality, non-hardening, paintable sealant meeting ASTM C920, min. Class 25.
  - Follow sealant manufacturer's instructions for application.
- Paint all exposed surfaces, including all drip edges or where water will hang. For best results, use a high-quality 100% acrylic exterior paint specially formulated for use on wood and engineered wood substrates; oil paint is acceptable.
  - DO NOT USE stain or vinyl-based paint.
  - Apply paint as soon as possible and within 180 days.
  - Follow paint manufacturer's instructions for application.
  - Follow LP's Care & Maintenance Instructions.

CEDAR TEXTURE Soffit:

- For best results, use semi-gloss finish.

BRUSHED SMOOTH Soffit:

- Either flat, satin or semi-gloss coatings can be applied to brushed smooth soffit.
  - Each offers different appearance & maintenance benefits.

Details - Soffit and Porch Ceiling Applications

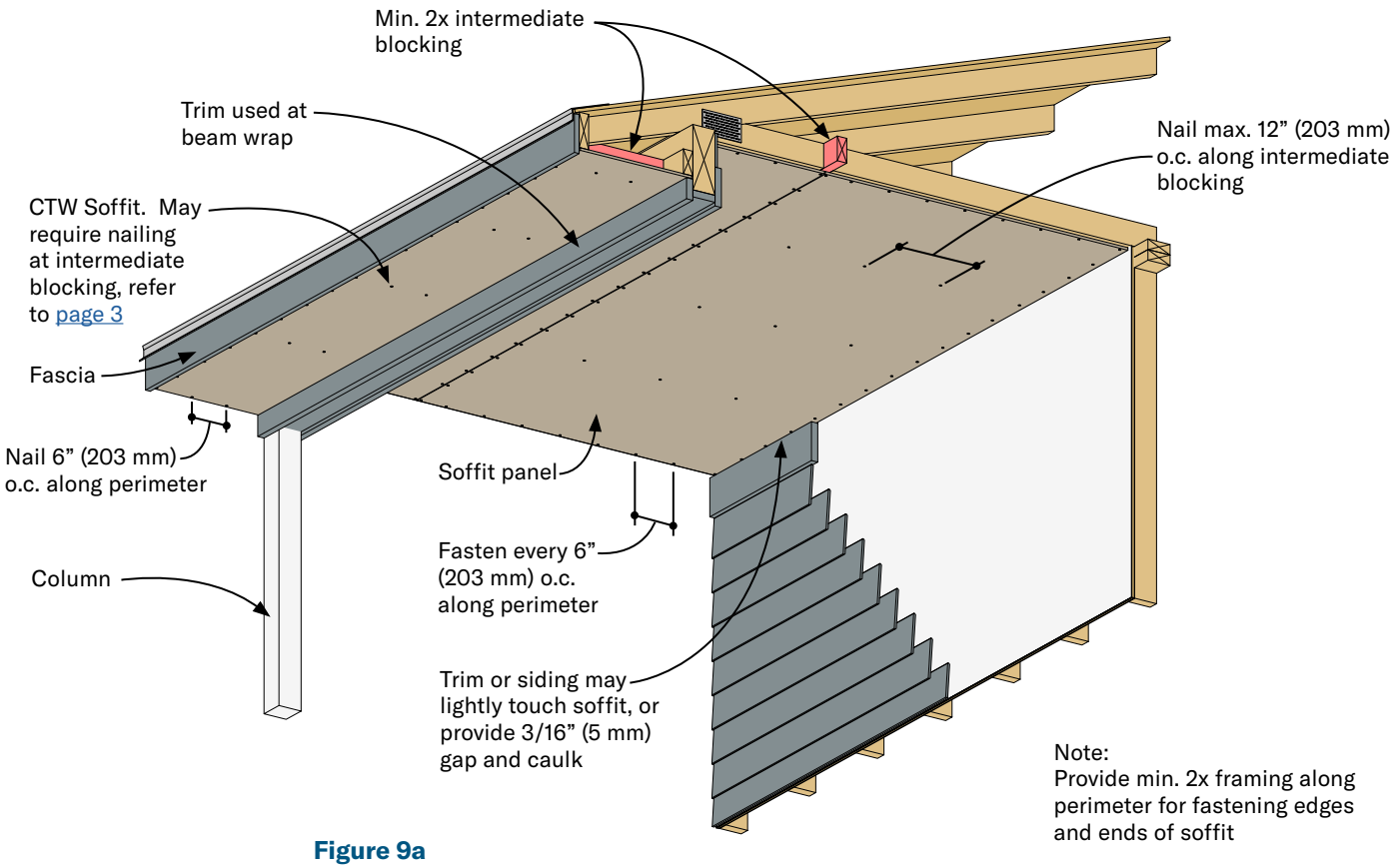

Figure 9a

All graphics are for illustrative purposes only.

LP® SmartSide® Soffit

Application Tips

IMPORTANT Always refer to the complete application instructions for the product you are installing. The application tips provided below are not intended to replace such instructions. Application instructions can be found at LPCorp.com. Failure to follow the full application instructions could cause personal injury or property damage, affect system performance, void any applicable warranty and/or violate applicable building codes.

Exercise safe practices at all times while handling and using this product. Refer to the relevant Safety Data Sheet (SDS) for important information on the safe handling and use of this product. These can be found at LPCorp.com.

- ☐ Refer to Tables 1, 2 or 3 in PR-N117 for nail spacing and penetration into framing.
  - If soffit panel is used as porch ceiling a min. of 1-1/2" (38 mm) is required. A longer nail embedment of 2" (51 mm) may be required depending on the wind pressure, wind speed and wind exposure category limitations in PR-N124.
- ☐ Nail size:
  - 38 Series soffit or LP® SmartSide® Nickel Gap siding installed as porch ceiling or soffit – use a min. 0.092" shank diameter hot-dip galvanized (ASTM A153) nail; a larger nail shank diameter and length may be required depending on the wind pressure, wind speed and wind exposure category limitations in PR-N117.
  - 76 & 190 Series – use a min. 0.113" shank diameter hot-dip galvanized (ASTM A153) smooth shank nail; a larger nail shank diameter and length may be required depending on the wind pressure, wind speed and wind exposure category limitations in PR-N117.
- ☐ Nail placement – 3/8" (10 mm) from ends and edges
- ☐ Nail spacing:
  - See application instructions for cut-to-width and soffit panel nail spacing guidelines
- ☐ Ripping – not recommended as it will leave the edge unprotected:
  - If soffit is ripped, rip 3/8" (10 mm) less than full width so you can leave a 3/16" (5 mm) space on each side
  - Special care must be taken to seal all exposed wood fiber
  - Sealing can be accomplished by applying paint or caulk
- ☐ Do not overdrive nails – nail head should seat snug to the face of soffit, if overdriven apply caulk and paint
- ☐ Caulk – use a high-quality, non-hardening, paintable exterior sealant meeting ASTM C920, min. Class 25
- ☐ Seal all exposed substrate – sealing can be accomplished by applying a paint or caulk
- ☐ Space all end and edge joints 3/16" (5 mm) and apply caulk
  - Exception - If using soffit panel as roof sheathing 1/8" (3 mm) spacing allowed.
- ☐ Soffit products are not designed for and are not suitable for use as siding.
  - Exception - Soffit panel APA Trademark stamped as **CUSTOM PRODUCTS - SOFFITS** and **RATED SIDING - SHEATHING** can be used as both siding and soffit. Refer to the product catalog for more information
- ☐ 76 or 190 Series soffit panels bearing RS-CD trademark stamp may be used in open soffit applications
- ☐ Soffit must not be in direct contact with CMU, brick, cultured stone, stucco, mortar, etc.
  - Provide a min. 3/8" (10 mm) gap, backer rod and caulk
- ☐ Vented soffit – do not cut through vents
- ☐ Exhaust ducts shall terminate not less than 3' (914 mm) in any direction from soffit vents
- ☐ Vented cut-to-width soffit – is available with 10 sq. in. (6 452 mm) of ventilation per linear foot
- ☐ Trim or siding may lightly touch soffit, or provide min. 3/16" (5 mm) gap and caulk
- ☐ For Limitations of Use – see Application Instructions
- ☐ See Application Instructions for Storage and Handling guidelines

©2026 Louisiana-Pacific Corporation. All rights reserved. All trademarks are the property of their respective owners. Printed in U.S.A.