LP SmartSide® TRIM & SIDING

LP SMARTSIDE SHAKE BRUSHED SMOOTH OR CEDAR TEXTURE PRIMED LAP SIDING

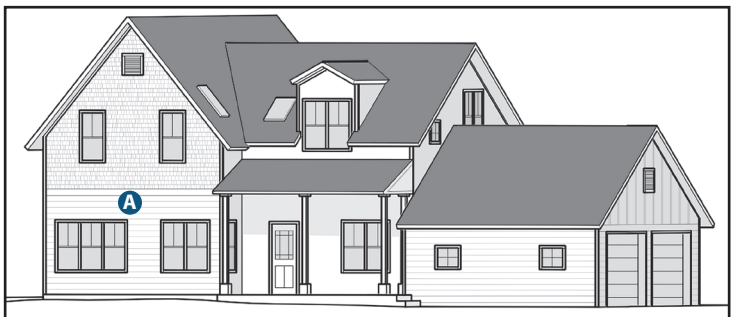

A - Shake Lap Siding

ON SITE STORAGE

HANDLING

- Handle siding with care during storage, temporary placement, and application.
  - Additional care is required to ensure shiplap edges are not damaged.

STORAGE

- Store siding:
  - Under a roof or waterproof covering (like a unit cover/bonnet).
  - Off the ground, on a flat-drained surface using supports that provide a min. 1-1/2" (38 mm) clearance from surface.
    - This includes when staging siding around jobsite during installation.

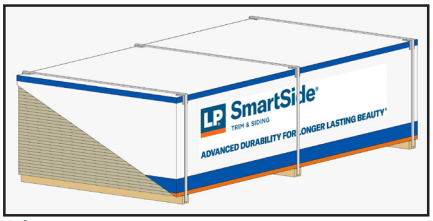

Diagram 1a

- LP is not responsible for damage due to improper handling and storage of the siding.

PREPARATION

General Information

- At the time of manufacture, siding meets or exceeds the performance standards set forth in ICC-ES AC321 and has achieved code recognition under ESR-1301 and CCMC 11826-L, APA recognition under PR-N124, and HUD-MR1318c. For copies of these reports, call LP Customer Support at 888-334-3551 or go online at https://lpcorp.com/product-literature
- LP's application instructions describe the minimum requirements needed to assure LP® SmartSide® Limited Warranty coverage.
- Failure to follow the LP application instructions could result in reduced product service life and may lead to denial of coverage under the LP SmartSide Limited Warranty.

Before You Begin

- Minimum 6 inch (152 mm) clearance must be maintained between siding and finish grade (ground cover).
- Siding applied adjacent to porches, patios, walks, roofs or other hard finished surfaces must have a clearance of at least 1 inch (25 mm) above that surface. (Diagram 2a)
- Siding must not be in direct contact with masonry, concrete, brick, stone, stucco or mortar. Backer rod is recommended to properly space materials at these locations.
- Apply siding in a manner that prevents moisture intrusion and water accumulation.
- All wood substrate exposed to the weather must be sealed in a manner the prevents moisture intrusion and water accumulation.
  - Seal ALL exposed cuts of siding and trim. Field spray applied coatings on cuts are not recommended.
  - Sealing can be accomplished by applying a coating or sealant according to the manufacturer's requirements.
- Do not use staples.
- **Siding is designed to be installed directly to wood structural panel wall sheathing**, or can be installed directly to studs spaced a maximum of 16 inches (406 mm) on-center (o.c.), or over rigid foam insulation or to furring strips over concrete/ masonry walls.

Preparation

Trim

- Trim should be thick enough so the shake does not extend beyond the face of the trim.
  - LP SmartSide 540 Series Trim is recommended when the shake reveal selected ranges between a maximum of 10 inches (254 mm) to a minimum of 7 inches (178 mm).
- Trim and fascia must be applied in a manner that will not allow moisture intrusion or water accumulation.

Moisture Control

- Moisture control and moisture vapor control are critical elements of proper housing design and construction. Check your local building codes for application procedures for handling moisture and water vapor in your area.
- Follow all applicable building code specifications relating to prevention of moisture intrusion into the wall assembly. LP® SmartSide® siding is a wood product, and, as with all wood products, must be kept free from excessive moisture. Lack of proper ventilation; exposure to constant or repetitive sources of water such as sprinklers, condensation, inadequate flashing; improper sealing; or failure to follow common building practices that prevent moisture intrusion into the wall system may cause damage, and products subject to such treatment will be excluded from warranty coverage.
- As with all wood products, do not apply engineered wood siding to a structure having excessive moisture conditions such as drying concrete, plaster, or wet blown cellulose insulation. If such conditions exist, the building should be well ventilated to allow it to dry prior to the application of the siding.
- Gutters with kick-out flashing and eave drip edge are recommended for control of roof water run off. (Diagram 2a)

Flashing Windows, Doors & Openings

- All openings must be properly sealed or flashed in a manner that prevents moisture intrusion or accumulation.
- Follow window and door manufacturers' instructions for flashing these components.
- Refer to LP SmartSide Trim & Fascia Application Instructions for additional flashing information and details.

Water-Resistant Barrier (WRB)

- A properly installed, code approved water-resistive barrier is required behind the siding. Consult your local building code for details.
- LP will assume no responsibility for water penetration or damage it may cause.

Water Run-Off Control

- Properly installed flashing materials will help direct water away from common water collecting areas.
- All flashing material shall be metal or another durable material that under normal outdoor environmental conditions will last for a period of not less than 50 years.
- All flashing materials must have a minimum 4 inch (102 mm) upper leg.
  - Add a 4 inch (102 mm) wide adhesive flashing to flash legs less than 4 inches (102 mm).
- Properly integrate flashing with the secondary WRB according to the WRB manufacturer's instructions. Use housewrap, flashing tape, kickout flashing, step flashing, Z-flashing, drip edge, gutters or other items as needed to maintain counter-flashing principle.
- Install kickout flashing to direct the water into the gutter. (Diagram 2a)
- Install step flashing that has a minimum 4 inch (102 mm) upper leg. (Diagram 2a)
- Maintain a minimum 1 inch (25 mm) clearance between the end of the gutter and the adjoining wall to allow for proper maintenance of the siding. (Diagram 2a)
- Seal ALL exposed cut edges.

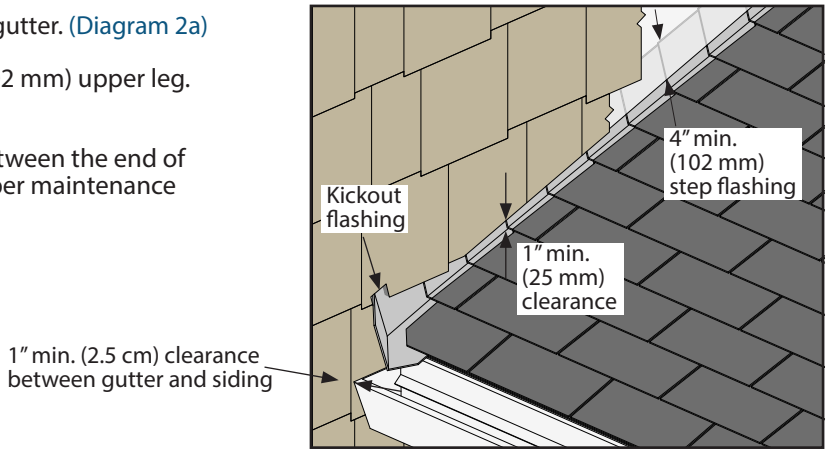

Diagram 2a

Preparation

Cutting

- For the cleanest cut and longer blade life, a fine-tooth carbide tipped blade is recommended.
- Siding is manufactured with a special edge coating which reduces moisture intrusion. If siding is ripped you must take special care to prime, paint and seal all exposed wood fiber as described in the Finishing Instructions on page 8.
- Climb cut the surface of the siding such that the rotation of the blade cuts downward on the primed or prefinished surface.
- **Do not miter edges.**

General Application Equipment

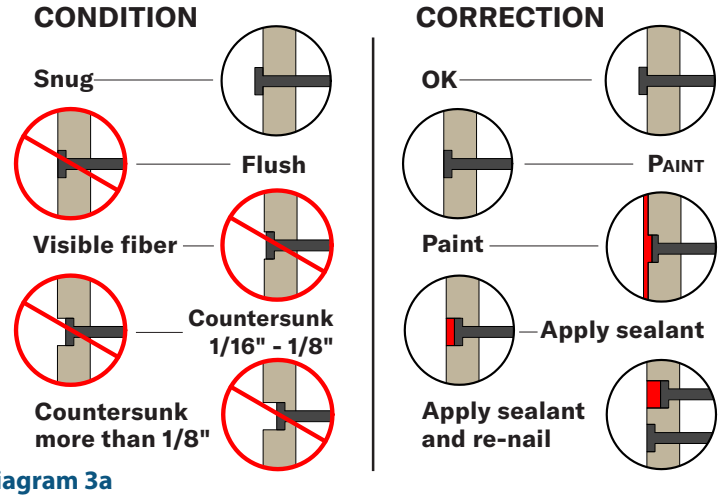

Diagram 3a

- **Fasteners:** Apply and correct overdriven fasteners as shown in Diagram 3a.
- **Sealant:** Use an exterior-quality, non-hardening, paintable sealant. Use a Class 25 or higher exterior sealant meeting the ASTM C920 Standard for Specification for Elastomeric Joint Sealants. Follow the sealant manufacturer's instructions for application.
- **Paint:** A premium quality exterior 100% acrylic latex paint, specially formulated for use on wood or engineered wood substrates is highly recommended. Semi-gloss or satin finish oil or alkyd paints are acceptable. For flat alkyd paint, check with the coating manufacturer to ensure it is suitable for engineered wood siding.

Installation

Fastening Instructions - Sheathing Only

- Install over wood structural panels a minimum 7/16 Category with an APA® Trademark that contains the consensus Standard DOC PS 1 or DOC PS 2.
  - Exception: LP® FlameBlock® Fire-Rated OSB Sheathing.
- **Fastener size:** Use a minimum **0.092 inch** diameter **ring shank** nail, hot-dipped galvanized (ASTM A153) or equivalent. Fasteners shall be corrosion resistant and capable of preventing rust, stain and deterioration under normal outdoor environmental conditions for a period of no less than 50 years.
- **Fastener placement:** A minimum 3/4 inch (19 mm) down from top edge of siding. Fasteners shall be placed 1 inch (25 mm) from ends. (Diagram 3b & 4b)
- **Fastener length:** Long enough to fully penetrate wood structural panel sheathing by at least 1/4 inch (6 mm). Ensure that the ring shanks of the nail fully engage the wood structural panel sheathing. (Diagram 3b)
- **Fastener spacing:** Space ring shank nails a maximum of 8 inches (203 mm) o.c. across the top of siding. (Diagram 4a)
- Apply siding to wall assembly directly to wood structural panel sheathing.
- Begin by nailing a starter strip approximately 3/8 inch (10 mm) thick x 1-1/2 inches (38 mm) wide flush with bottom edge of sill plate. (Diagram 5d)
  - Starter strip serves two purposes
    - Provides separation of siding from CMU or poured concrete foundation.
    - Provides proper angle to first course of siding.
  - Exception: starter strip may be omitted if separation from concrete is maintained. Separation can also be achieved by ensuring WRB is placed behind siding.

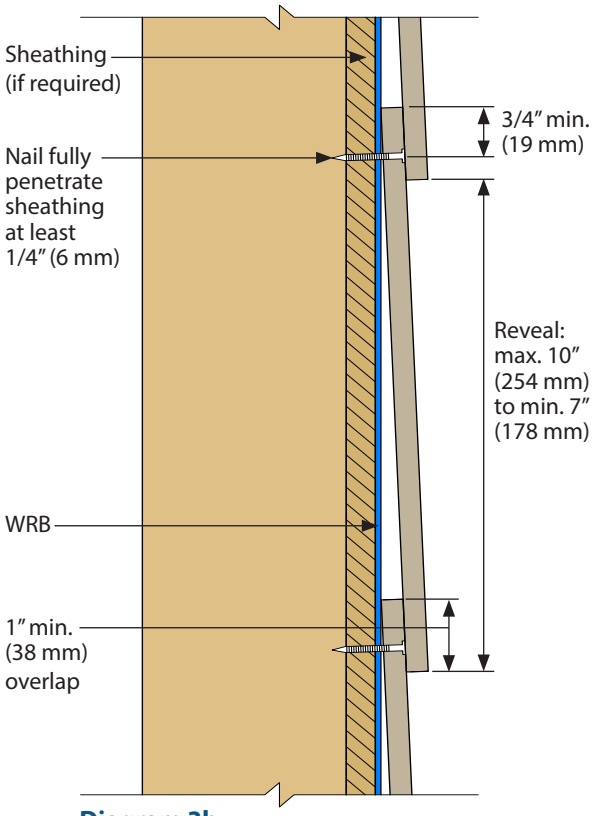

Diagram 3b

Installation

Fastening Instructions - Sheathing Only *(continued)*

- LP® SmartSide® Shake is a reversible siding product that can be applied with either a staggered edge appearance or rotated 180 degrees to achieve straight edge appearance. (Diagrams 4a & 4b)
- **Staggered Edge:** Starting from **left** to right, level and install shake so bottom edge is no more than 1/2 inch (13 mm) below the starter strip (Diagrams 4a), or
- **Straight Edge:** Starting from **right** to left, level and install shake so bottom edge is no more than 1/2 inch (13 mm) below the starter strip. (Diagrams 4b)
- Use the alignment groove in shiplap edge as a spacing guide. Do not overlap the alignment groove. (Diagrams 4b & 5b)
  - Alternate reveals are allowed. Trim should be thick enough so the shake does not extend beyond its face.
- To obtain the best shake appearance using **staggered edge or straight edge**, cut and fasten the starter pieces for each course using a 12 inch (305 mm) stair-step method as shown in (Diagrams 4a & 4b).
- Overlap shakes using the alignment notch to conceal nail heads and achieve uniform reveal. The alignment notch provides for an overlap of at least 1 inch (25 mm) at the shortest staggered edge to a maximum of 1-3/4 inches (45 mm) at the longest staggered edge regardless of whether the staggered or straight edge is exposed.
- The shake should fit against the window/door trim or the corner board leaving a 3/16 inch (5 mm) gap.
  - Shiplap at this location must be removed to full panel thickness and caulked.
  - The opposite shiplap edge is facing up, to receive the next piece of siding.

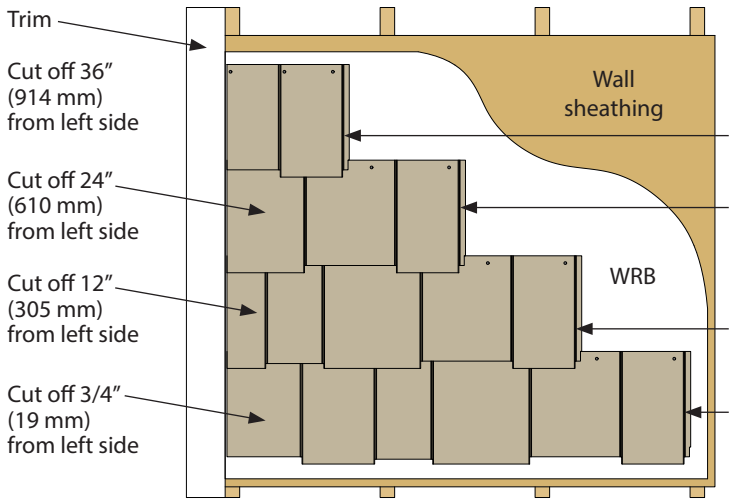

Staggered Edge

Diagram 4a

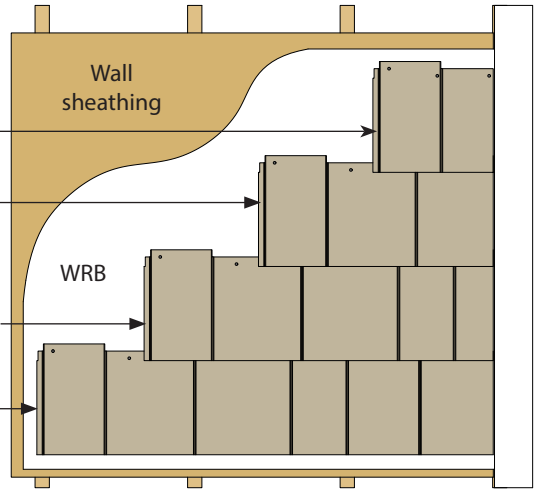

Straight Edge

Diagram 4b

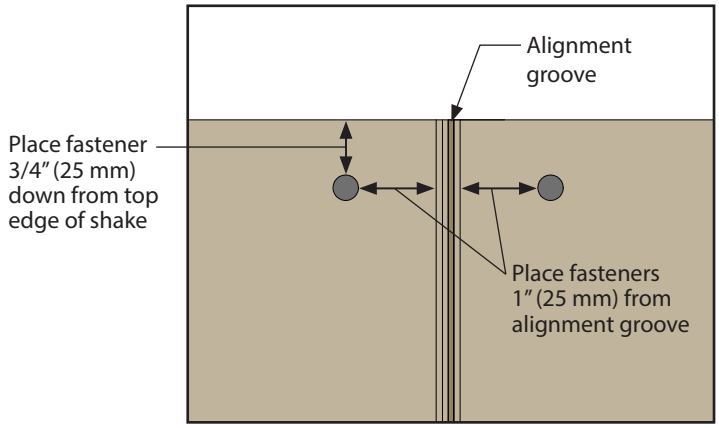

Diagram 4c

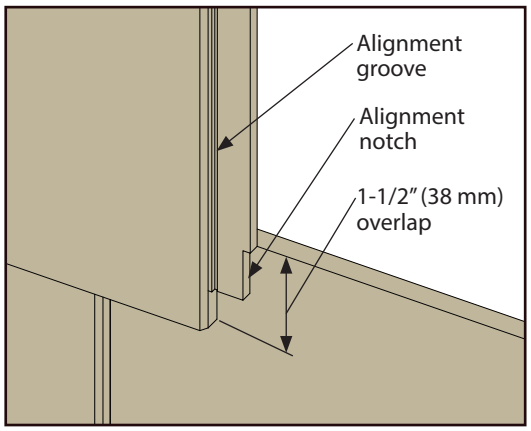

Diagram 4d

Installation

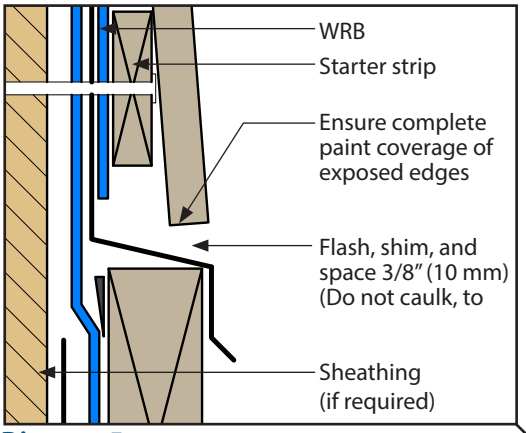

Diagram 5a

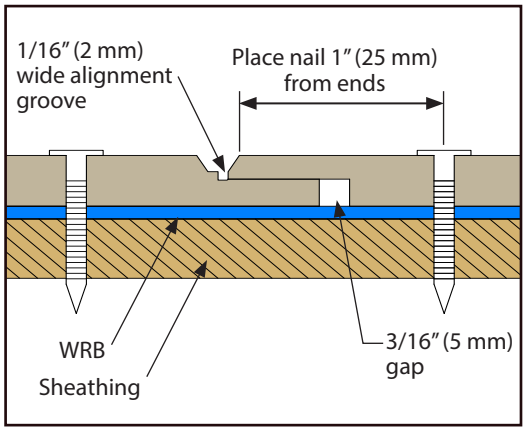

Diagram 5b

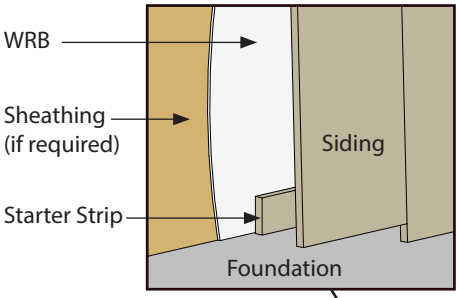

Diagram 5d

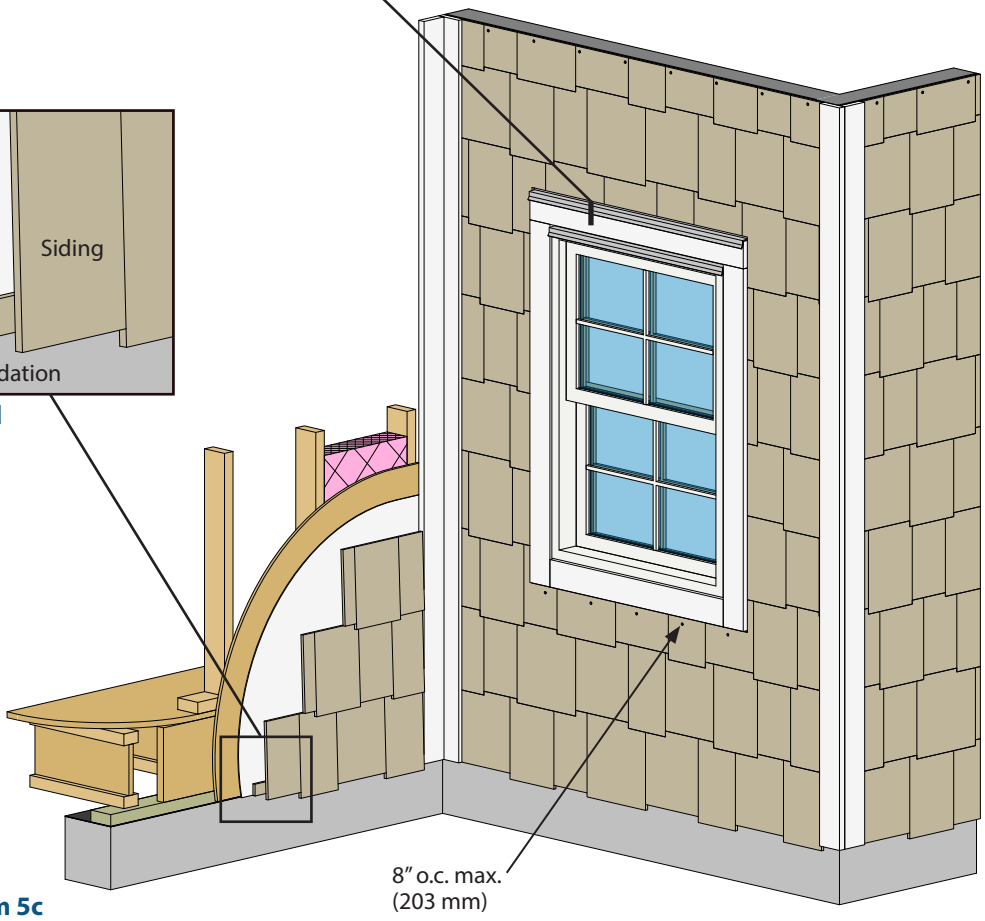

Diagram 5c

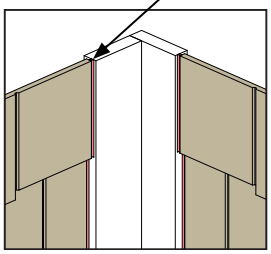

5e **Preferred Inside Corner**

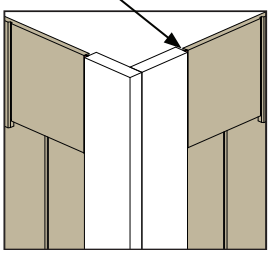

5f **Preferred Outside Corner**

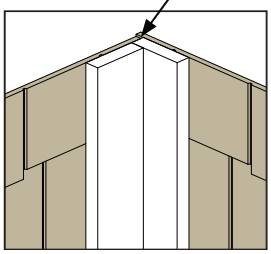

5g **Alternate Inside Corner**

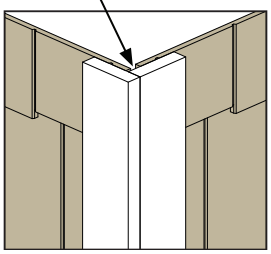

5h **Alternate Outside Corner**

Installation

Alternative Fastening Option: Fastening Instructions - Direct to Stud

- Siding may be installed directly to studs spaced no greater than 16" (406 mm) o.c. that have adequate corner bracing.
- Use a minimum **0.092 inch** diameter **smooth shank** nail, hot-dipped galvanized (ASTM A153) or equivalent. Fasteners shall be corrosion resistant and capable of preventing rust, stain and deterioration under normal outdoor environmental conditions for a period of no less than 50 years.
- **Fastener placement:** A minimum 3/4 inch (19 mm) down from top edge of siding. Do not place fastener through top shiplap, place fastener 1 inch (25 mm) from end. (Diagram 6b) Place fastener into bottom shiplap a minimum 3/4 inch (19 mm) down from top edge of siding. (Diagram 6b)
- **Fastener length:** Long enough to fully penetrate studs by 1-1/2 inch (38 mm). (Diagram 6b)
- **Fastener spacing:** Space nails a maximum of 16 inches (406 mm) o.c. across the top of siding. (Diagram 6a)
- Begin by nailing a starter strip approximately 3/8 inch (10 mm) thick x 1-1/2 inches (38 mm) wide flush with bottom edge of sill plate. (Diagram 5d)
  - Starter strip serves two purposes
    - Provides separation of siding from CMU or poured concrete foundation.
    - Provides proper angle to first course of siding.
  - Exception: starter strip may be omitted if separation from concrete is maintained. Separation can also be achieved by ensuring WRB is placed behind siding.
- **Staggered Edge:** Starting from **left** to right, level and install shake so bottom edge is no more than 1/2 inch (13 mm) below the starter strip, or
- **Straight Edge:** Starting from **right** to left, level and install shake so bottom edge is no more than 1/2 inch (13 mm) below the starter strip.
- Use the alignment groove in shiplap edge as a spacing guide. Do not overlap the alignment groove. (Diagrams 4b & 5b)
  - Alternate reveals are allowed. Trim should be thick enough so the shake does not extend beyond its face.
- To obtain **staggered edge** appearance, cut and fasten starter pieces for each course using a 16 inch (406 mm) stair-step method as shown in (Diagrams 6a).
- To obtain **straight edge** appearance, rotate shake siding drip edge 180 degrees, cut and fasten starter pieces for each course using a 16 inch (406 mm) stair-step method.
- Overlap shakes using the alignment notch to conceal nail heads and achieve uniform reveal. The alignment notch provides for an overlap of at least 1 inch (25 mm) at the shortest staggered edge to a maximum of 1-3/4 inches (45 mm) at the longest staggered edge regardless of whether the staggered or straight edge is exposed.
- The shake should fit against the window/door trim or the corner board leaving a 3/16 inch (5 mm) space.
  - Shiplap at this location must be removed to full panel thickness and caulked.
  - The opposite shiplap edge is facing up, to receive the next piece of siding.
- When fastening direct to stud, every other shake line (or keyway) will fall in line with the shake lines on the courses above and below. (Diagram 6a)

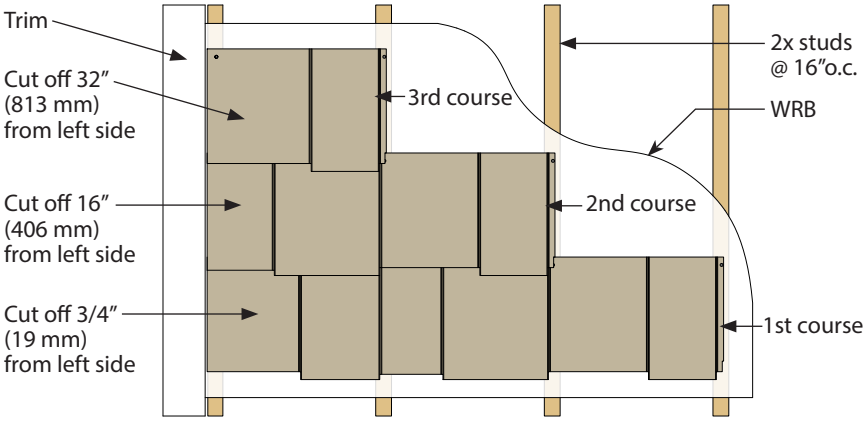

Staggered Edge

Diagram 6a

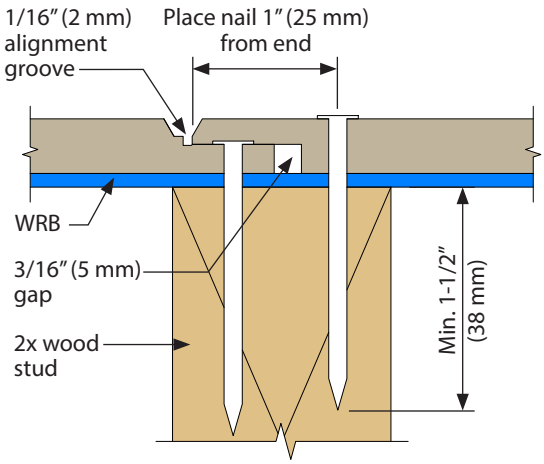

Diagram 6b

Installation

Alternative Fastening Option:
Attachment to Furring Strips over Rigid Foam Insulation > 1 inch, or Furring Strips over Concrete/Masonry Walls

- For rigid foam insulation greater than 1 inch (25 mm), install over a minimum 1x4 (25 mm x 102 mm) nominal size Southern Pine furring strips with a specific gravity greater than or equal to 0.55, no more than 12 inches (305 mm) o.c. in wind speed areas less than or equal to 200 mph.

- Use a minimum **0.120 inch** diameter **ring shank** nail, hot-dipped galvanized (ASTM A153) or equivalent.

- **Fastener placement:** A minimum 3/4 inch (19 mm) down from top edge of the siding.

- **Fastener length:** Shall fully penetrate a minimum 1/2 inch (13 mm) into furring strips. Caution: fastener shall not bottom out on a masonry wall leaving the fastener head less than flush with the face of trim or siding. (Diagram 7b)

- Blind nail with a minimum of two ring shank nails per furring strip. (Diagram 7a)

- Shiplap joints shall occur over furring strips and joints should be staggered. (Diagram 7b)

- Overlap shakes using the alignment notch to conceal nail heads and achieve uniform reveal. The alignment notch provides for an overlap of at least 1 inch (25 mm) at the shortest staggered edge to a maximum of 1-3/4 inch (45 mm) at the longest staggered edge regardless if whether the staggered or straight edge is exposed.

- Siding shall be installed to safely resist all loads, including wind loads, of the locally adopted building codes. The installation of siding shall result in a system that provides a load path that meets the requirements for the transfer of loads from their point of origin through the load-resisting elements to the structure. The mechanical connection of the furring strip to structure is the responsibility of a design professional. LP assumes no liability for any loss or damage caused by the design of the mechanical connection of the furring strip to the structure and is expressly released by the purchaser or owner from any such loss or liability.

- **Exception:** Shakes may be nailed directly to rigid foam insulation less than or equal to 1 inch (25 mm) thick, unless a drainage plane is required by the local building code. Nail length must be increased to ensure a minimum 1-1/2 inch (38 mm) fastener penetration into the structural framing or wood structural panels and structural framing

- Louisiana-Pacific Corporation will assume no responsibility for any damage or condition arising from the use of rigid foam insulation.

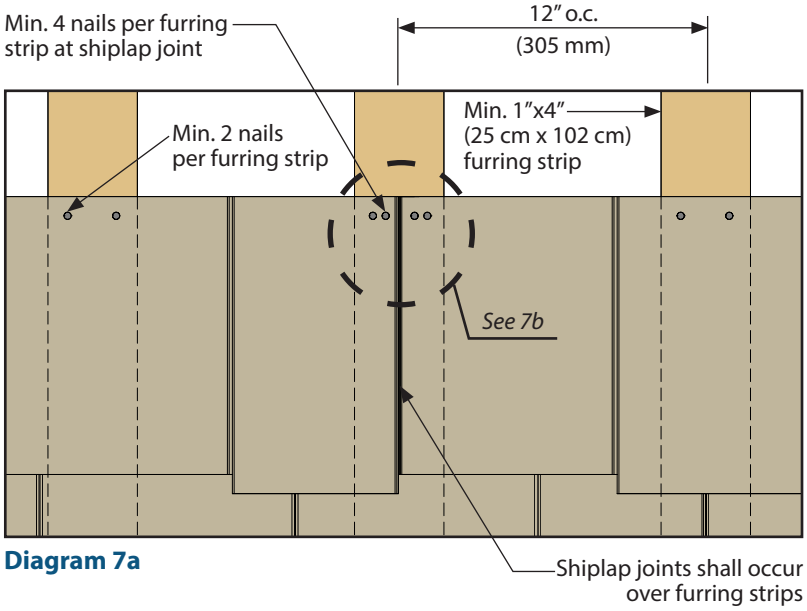

Diagram 7a

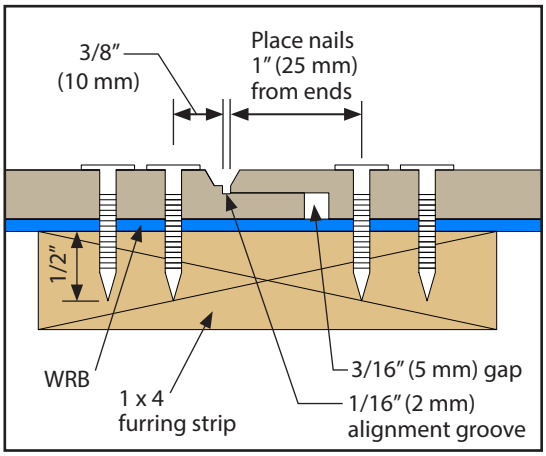

Diagram 7b

Installation

Finishing Instructions

- When caulk is required, use a high-quality, non-hardening, paintable sealant meeting ASTM C920, minimum Class 25.
  - Follow sealant manufacturer's instructions for application.

- Paint all exposed surfaces, including all drip edges or where water will hang. For best results, use a high-quality 100% acrylic exterior paint specially formulated for use on wood and engineered wood substrates; oil paint is acceptable.
  - DO NOT USE stain or vinyl-based paint.
  - Apply paint as soon as possible or within 180 days.
  - Follow paint manufacturer's instructions for application.
  - Follow LP's Care & Maintenance Instructions.

CEDAR TEXTURE Shake Lap Siding:
- For best results use semi-gloss finish.

BRUSHED SMOOTH Shake Lap Siding:
- Either flat, satin or semi-gloss coatings can be applied to brushed smooth finish siding.
  - Each offers different appearance & maintenance benefits.

LIMITED WARRANTY
LP® SmartSide® Trim & Siding is covered under the LP® SmartSide® Prorated 50-Year Limited Warranty. Refer to the warranty, which is available online, for complete terms and conditions. Product must be transported, stored, handled, installed, finished, and maintained in accordance with all published application, finishing, care, and maintenance instructions, technical notes, and bulletins (collectively, "Instructions") in effect at the time of installation.

Failure to follow such Instructions will make the limited warranty inapplicable as to the products affected by such failure. No modification or exception to these Instructions and no non-published recommendations are valid unless issued in writing on a project-specific basis by LP's Sr. Director of Technology prior to application. Always check and comply with local building codes. Even where these instructions approve installation over certain substrates or incorporate requirements of building codes, LP's liability for the performance of the product is limited as expressly provided in the Limited Warranty.

FIND ALL LP® SMARTSIDE® PRODUCT LITERATURE AT LPCORP.COM/PRODUCT-LITERATURE

⚠WARNING: Drilling, sawing, sanding or machining wood products can expose you to wood dust, a substance known to the State of California to cause cancer. Avoid inhaling wood dust or use a dust mask or other safeguards for personal protection.

For more information go to www.P65Warnings.ca.gov/wood.

©2025 Louisiana-Pacific Corporation. All rights reserved. All trademarks are the property of their respective owners. Printed in U.S.A.

NOTICE: Louisiana-Pacific Corporation periodically updates and revises its product information. The information in this document is subject to change without notice. To verify that this version is current, call 888-334-3551.

Louisiana-Pacific Corporation
1610 West End Ave., Suite 200
Nashville, TN 37203

www.lpcorp.com

LPZB0839 09/16/2025