DUALCHEF 415 G

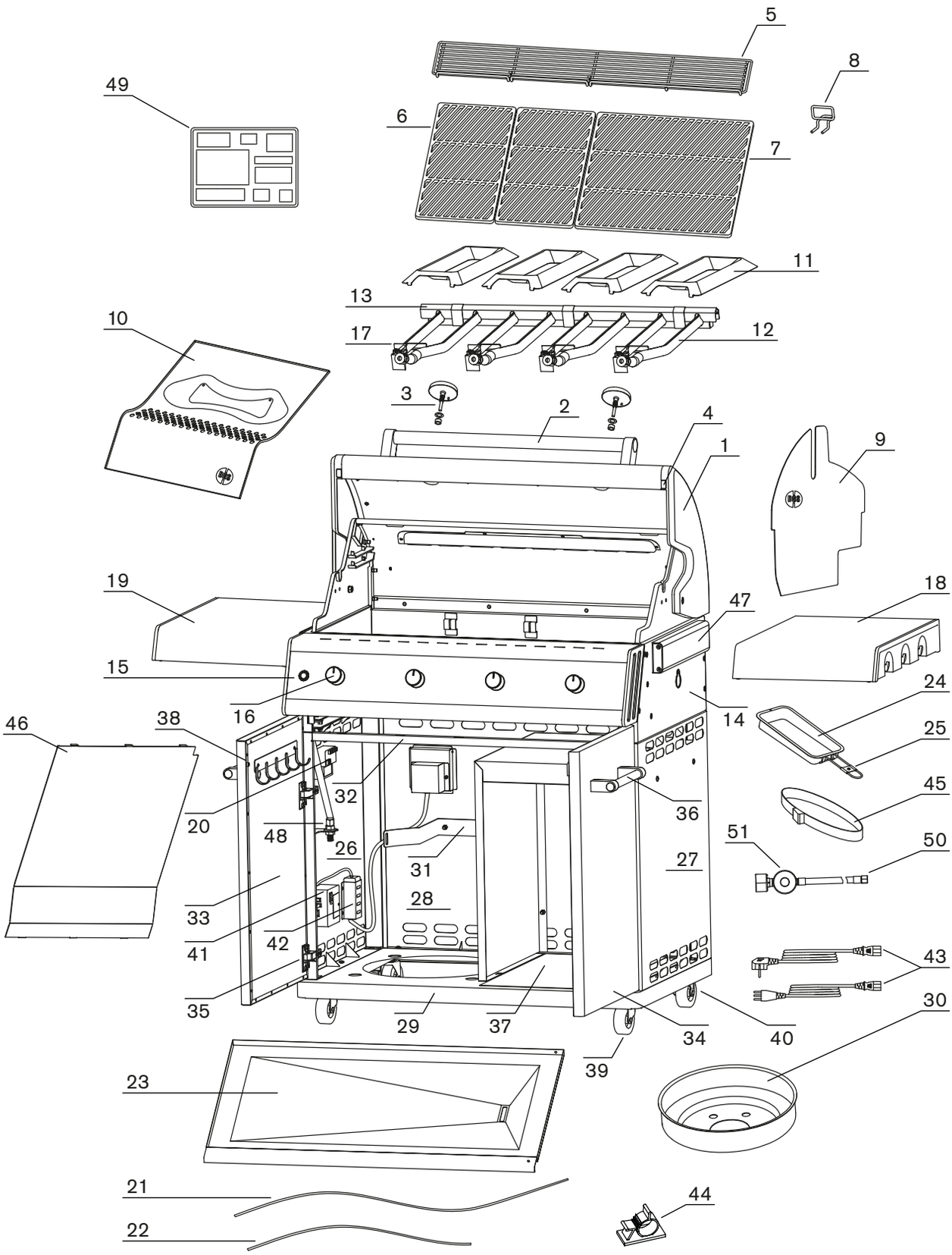

DUALCHEF 415 G

A		LID HINGE	DECKELSCHARNIER
Pos.	**Art. Nr.**	**Description**	**Beschreibung**
A1	18.371.45	Lid axle	Deckelachse
A2	18.371.50	Lid axle washer	Deckelachsen-Scheibe
A3	18.371.51	Washer	Deckelachse U-Scheibe
A4	18.371.52	Lock nut	Stop-Schraube

B		LID HANDLE	DECKELGRIFF
Pos.	**Art. Nr.**	**Description**	**Beschreibung**
B1	18.371.53	Protection washer lid handle	Schutz-Unterlagsscheibe Deckelgriff
B2	18.371.54	Hexagon screw	Inbusschraube
B3	18.371.55	Lid lining cover	Abdeckung
B4	18.371.56	Screw	Schraube

D		E-BOX AND IGNITION	E-BOX UND ZÜNDUNGSBOX
Pos.	**Art. Nr.**	**Description**	**Beschreibung**
D1	18.371.59	Screw	Schraube
D2	18.371.58	Screw	Schraube

E		BACK PLUG	STROMSTECKER
Pos.	**Art. Nr.**	**Description**	**Beschreibung**
E1	18.371.60	Screw	Schraube
E2	18.371.58	Screw	Schraube

A

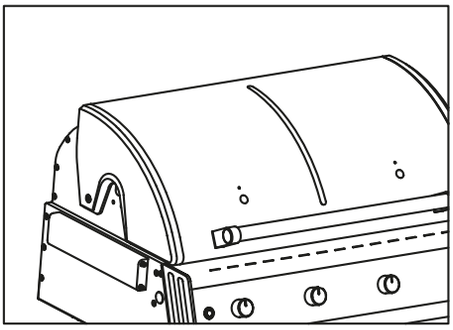

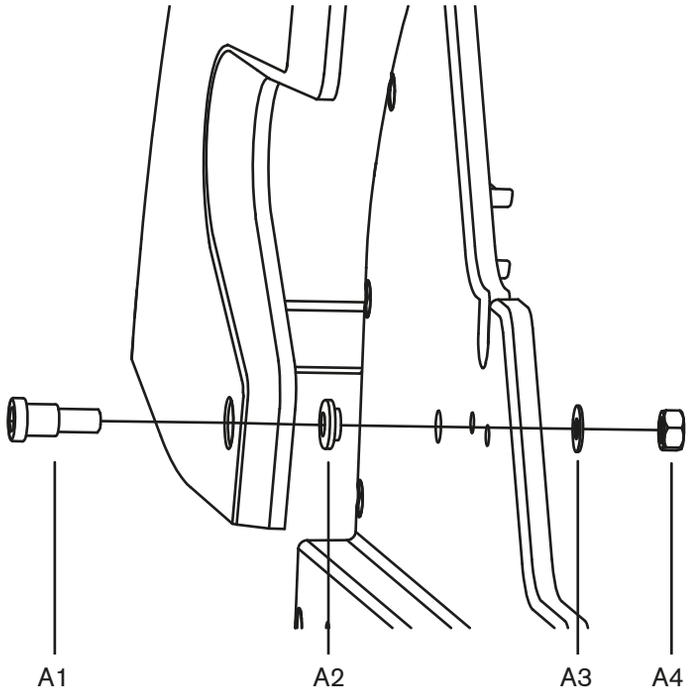

B

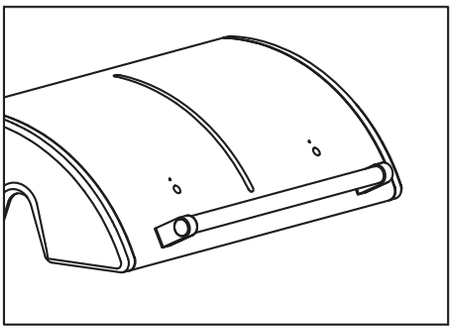

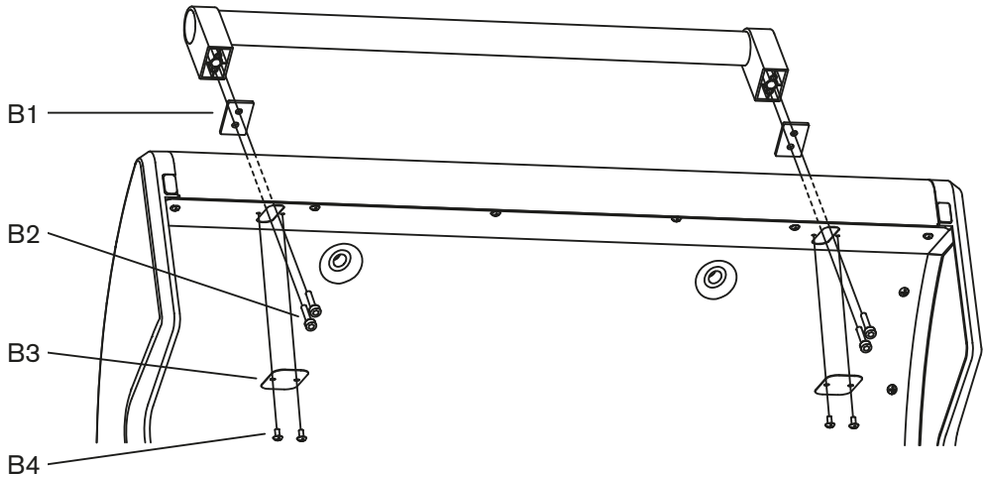

D

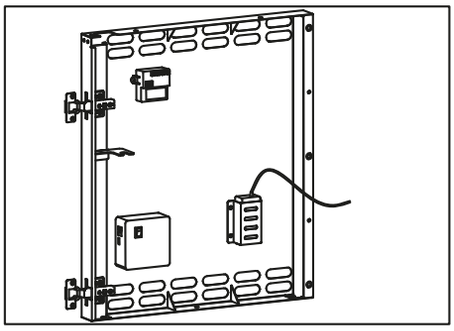

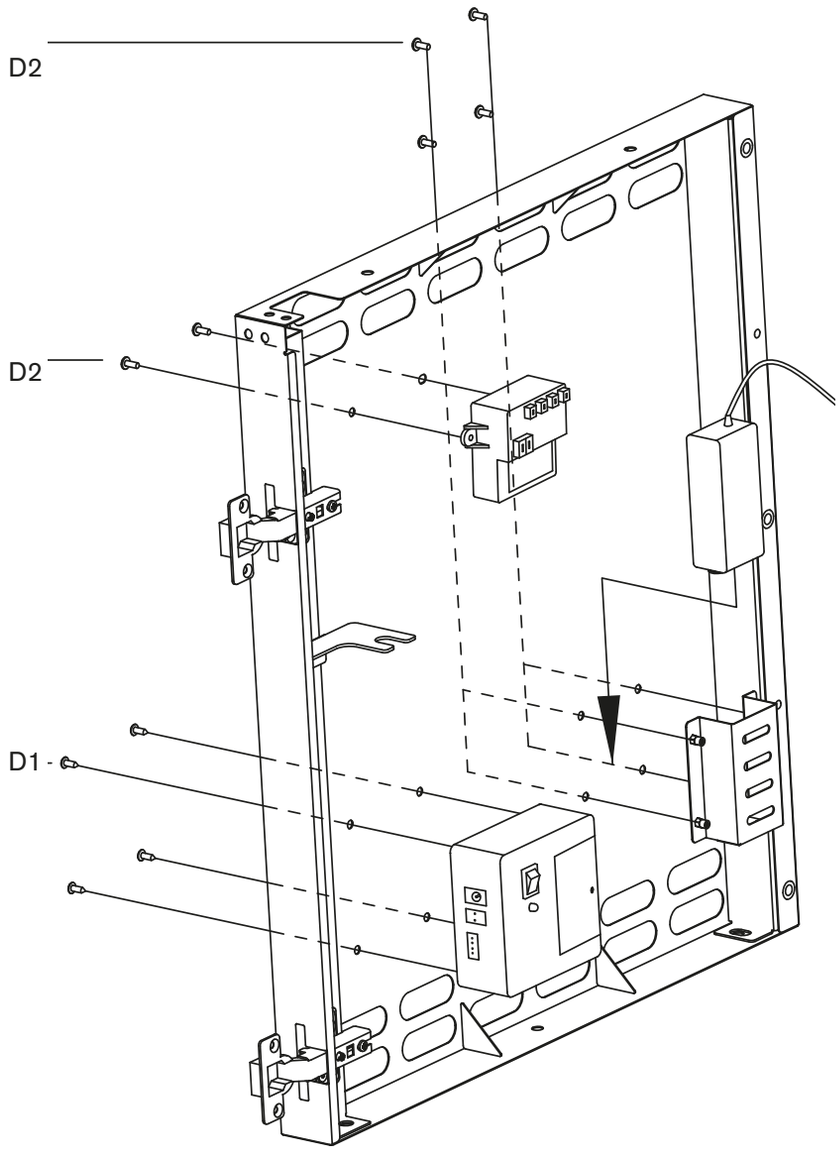

E

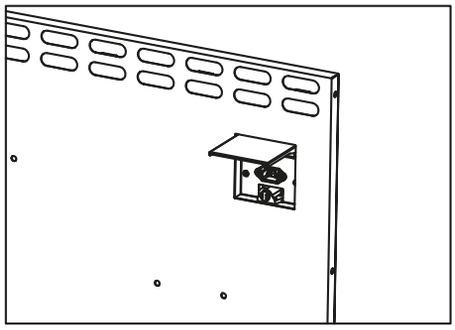

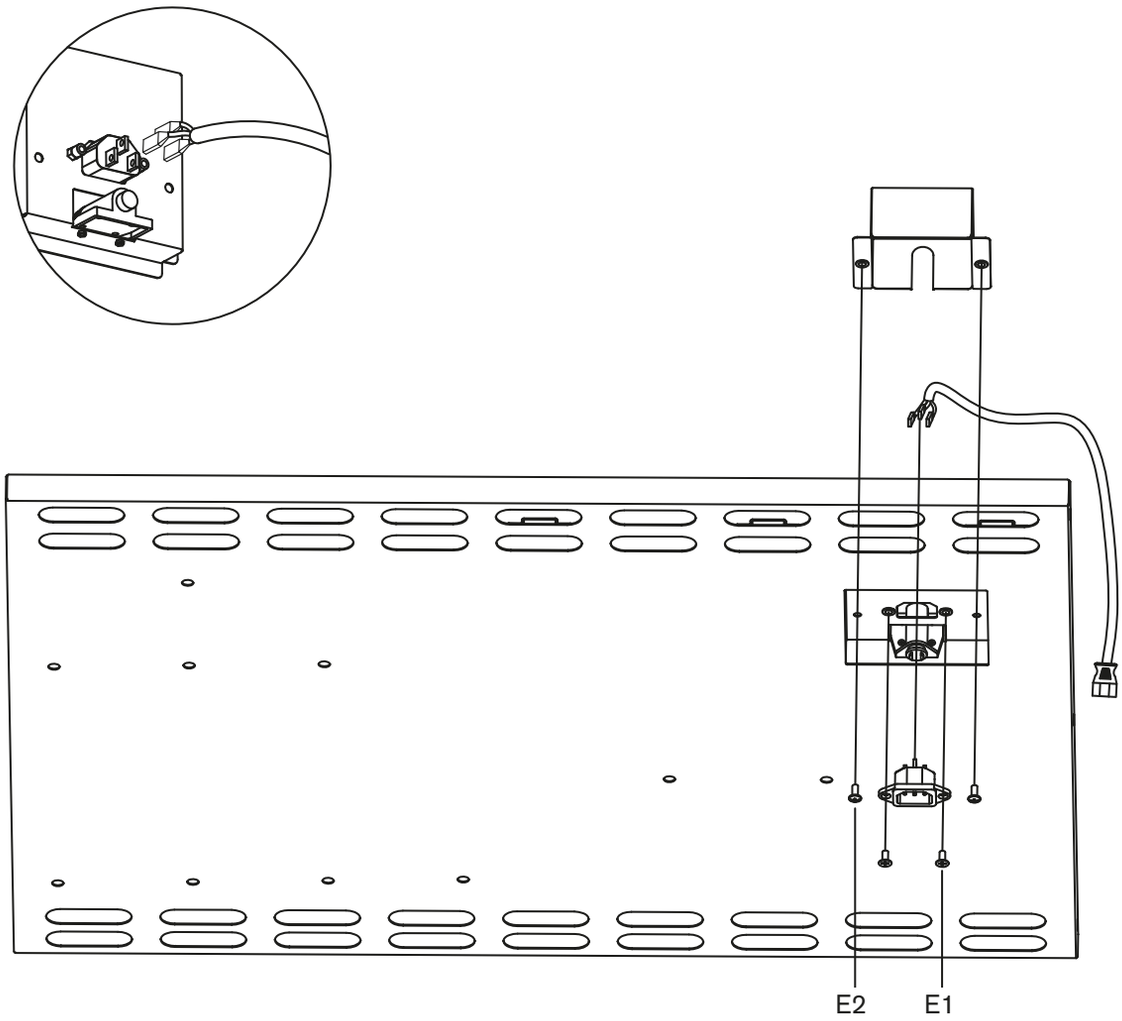

DUALCHEF 415 G

18.379.42

M5 X 12.5 Hexagon step screw		
8x	xg	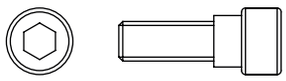
18.371.34		

M5 X 12 Hexagon screw		
8x	xh	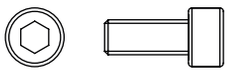
18.371.35		

M6 X 16 Hexagon screw		
38x	xi	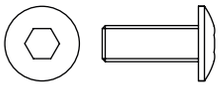
18.371.36		

M4 X 10		
26x	xk	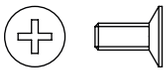
18.371.37		

M6 X 12 Wing screw		
4x	xl	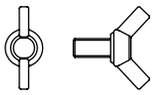
18.371.39		

M5 X 12		
4x	xm	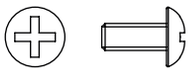
18.371.40		

M6 Spring washer		
16x	R	
18.371.06		

M6 Washer		
16x	b	
18.370.61		

M5 Washer		
4x	ak	
18.371.38		

Lid protection pin		
2x	al	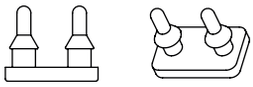
18.371.41		

Door protection pin		
2x	am	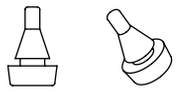
18.371.42		

Cable tree fixation clip		
3x	an	
18.371.43		

Tool for hexagon screw		
1x	ao	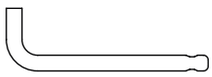
18.371.44		

Wrench (S19 & S17)		
2x	ap	
18.371.46		

Wrench (S14 & S11)		
1x	aq	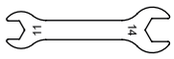
18.371.47		

Crosshead screwdriver A (201mm)		
1x	ar	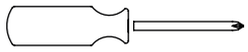
18.371.48		

Crosshead screwdriver B (85mm)		
1x	as	
18.371.49		

Rechargeable battery 2400 mAh (AA)		
4x		

NON rechargeable battery 1.5V (AAA)		
2x		

1.

xi 16× (18.371.36)	R 16× (18.371.06)
b 16× (18.370.61)	

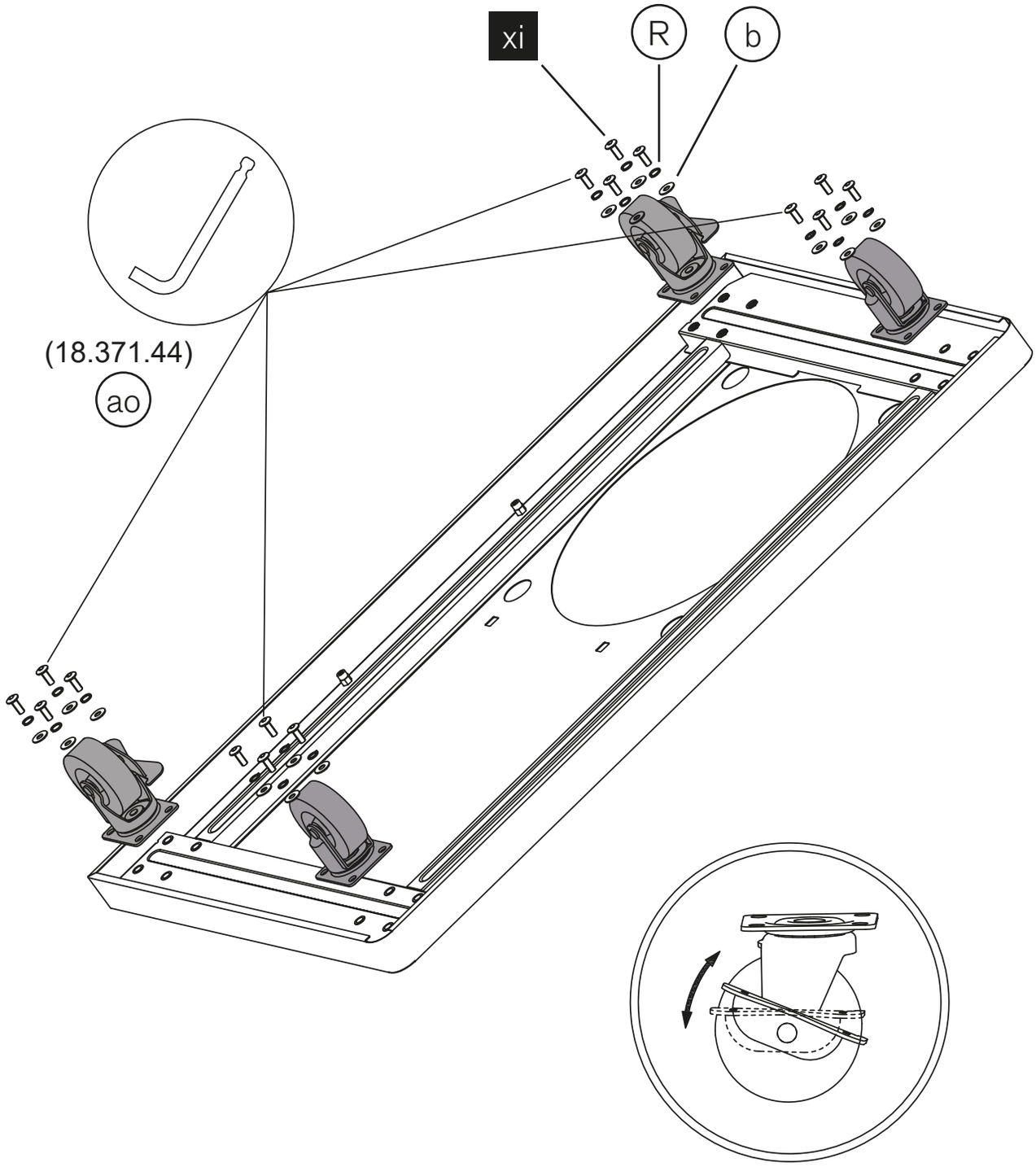

2.

xi 3× (18.371.36)

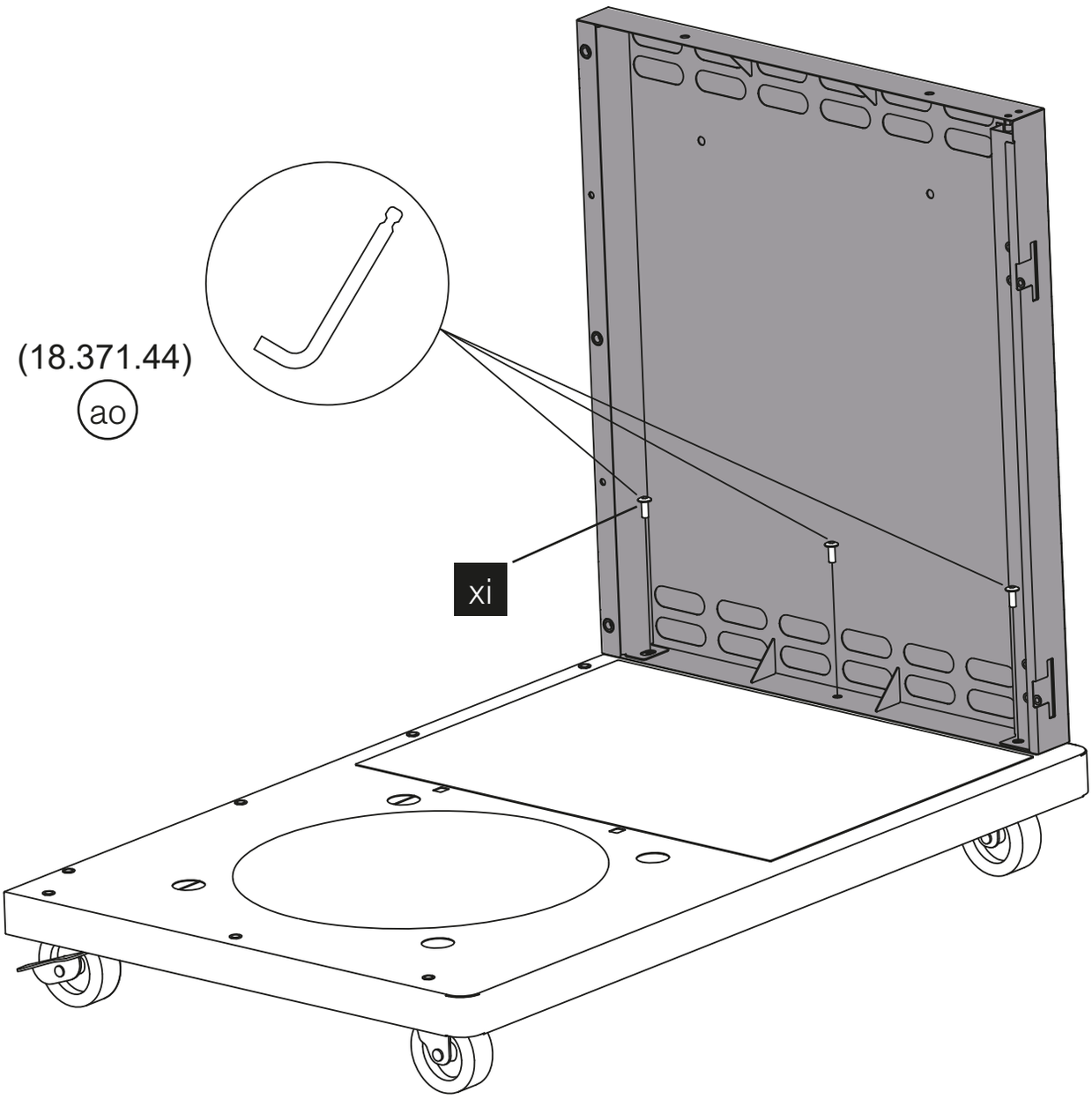

3.

xi 3 × (18.371.36)

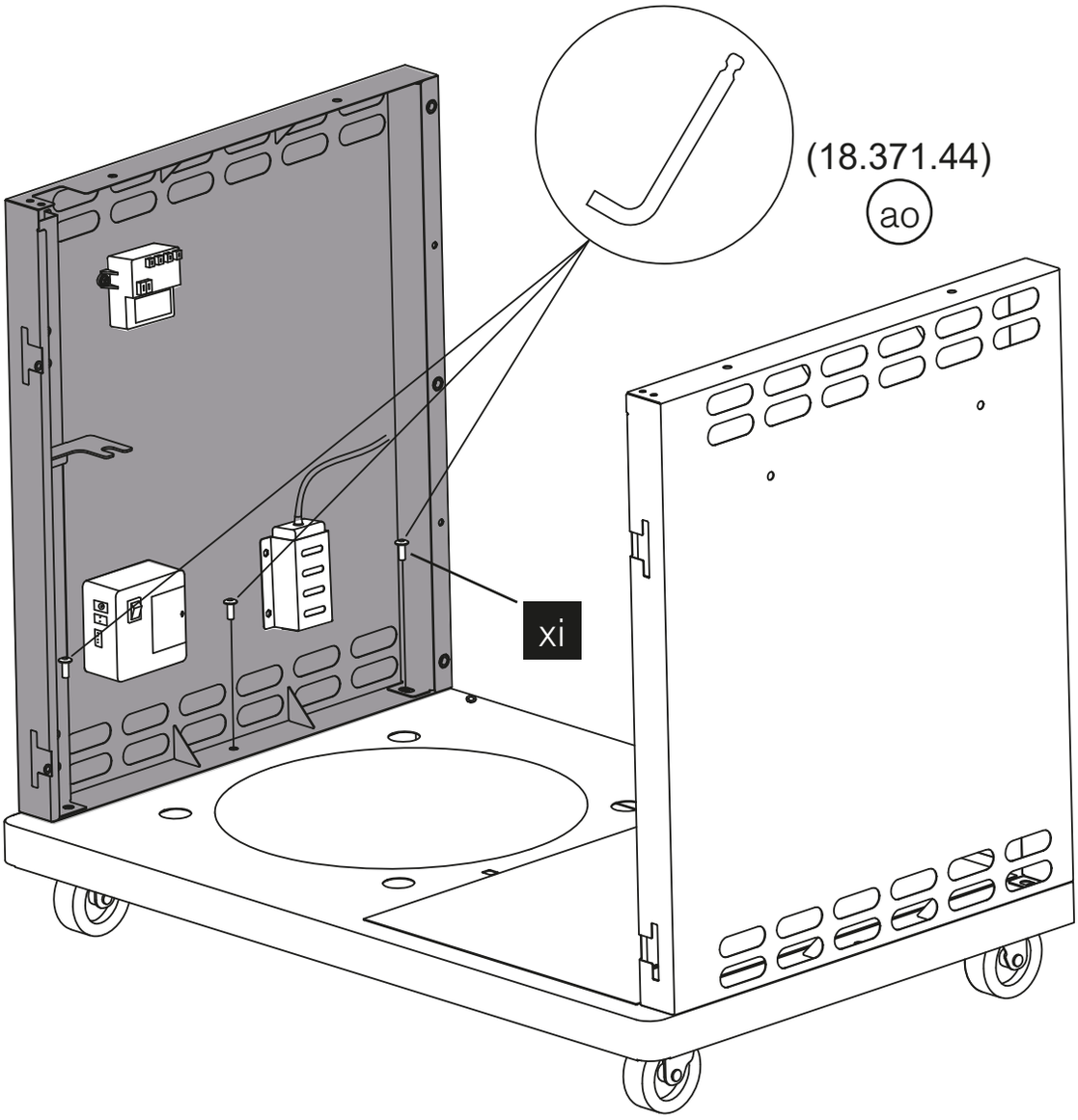

4.

xi 2× (18.371.36)

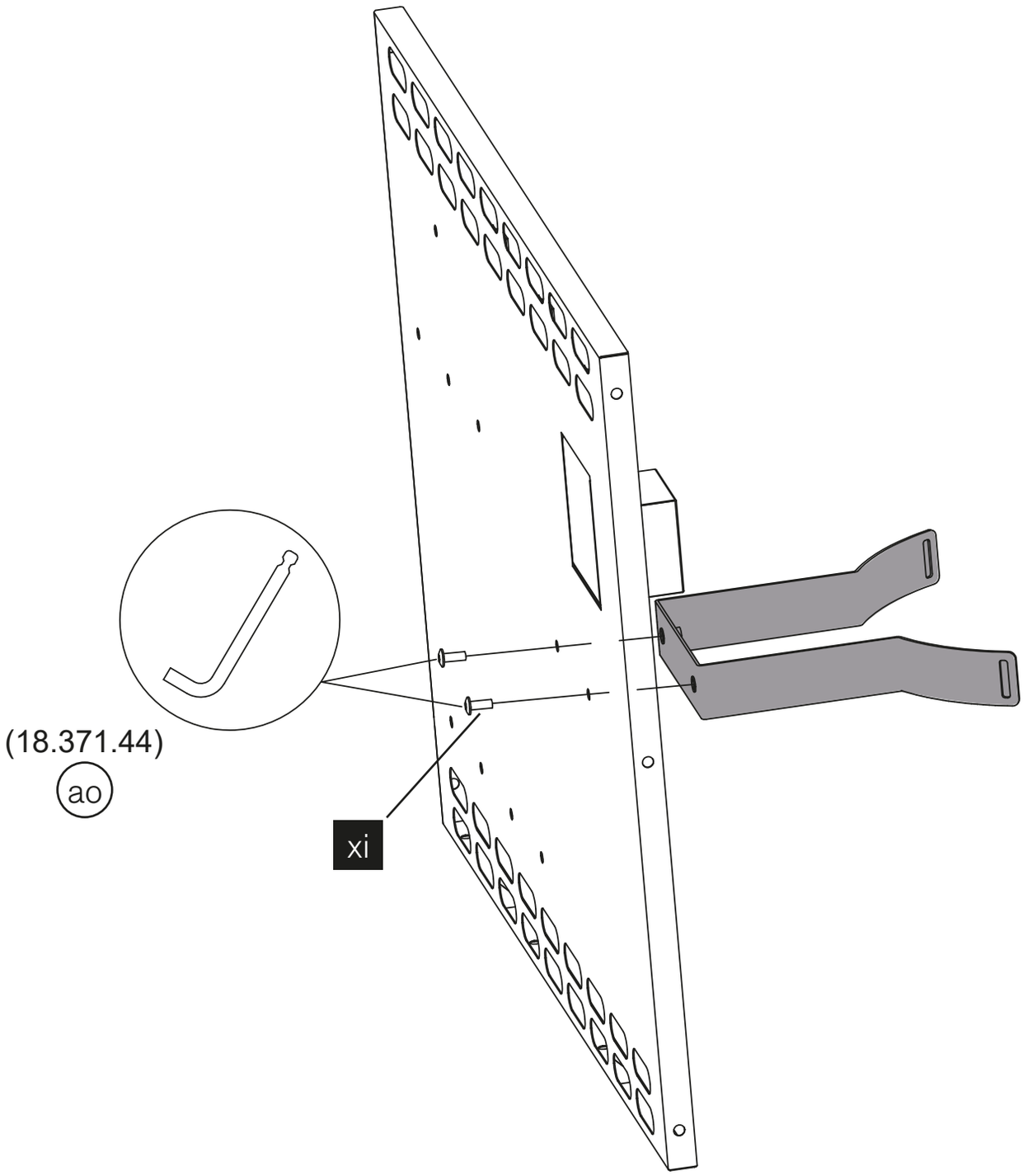

5.

xi 10× (18.371.36)

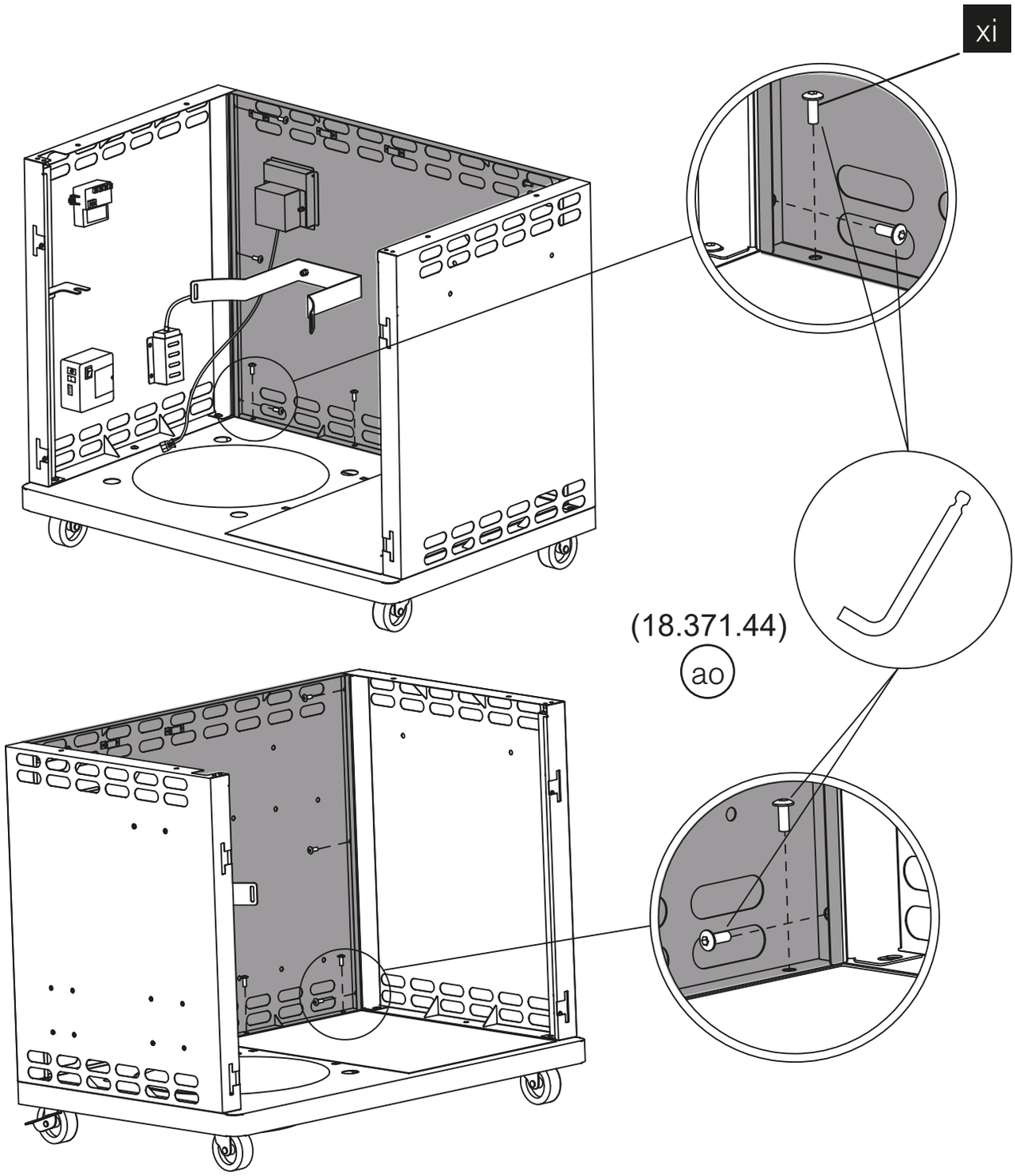

6.

xh 4× (18.371.35) xm 4× (18.371.40)

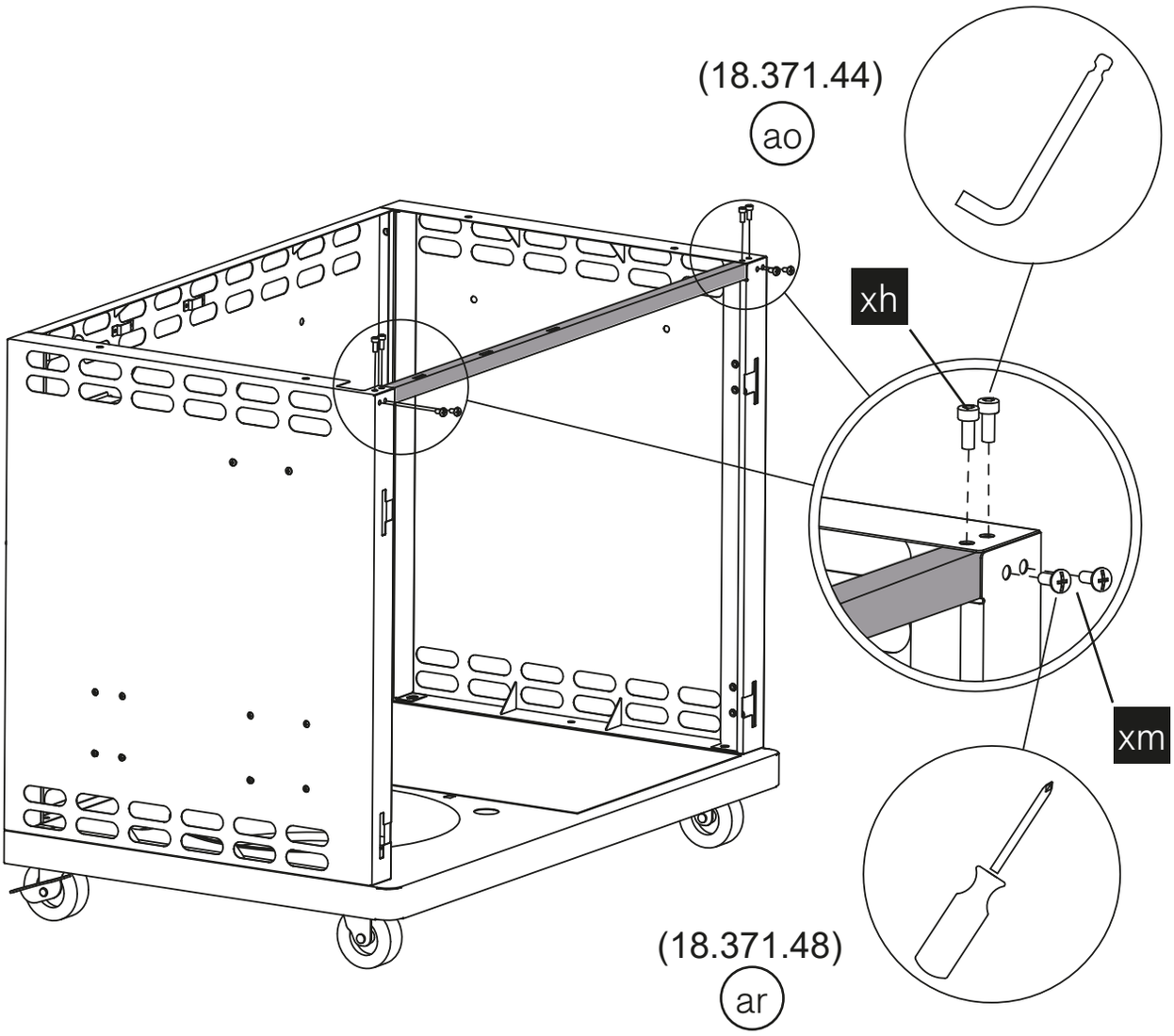

7.

xi 4× (18.371.36)

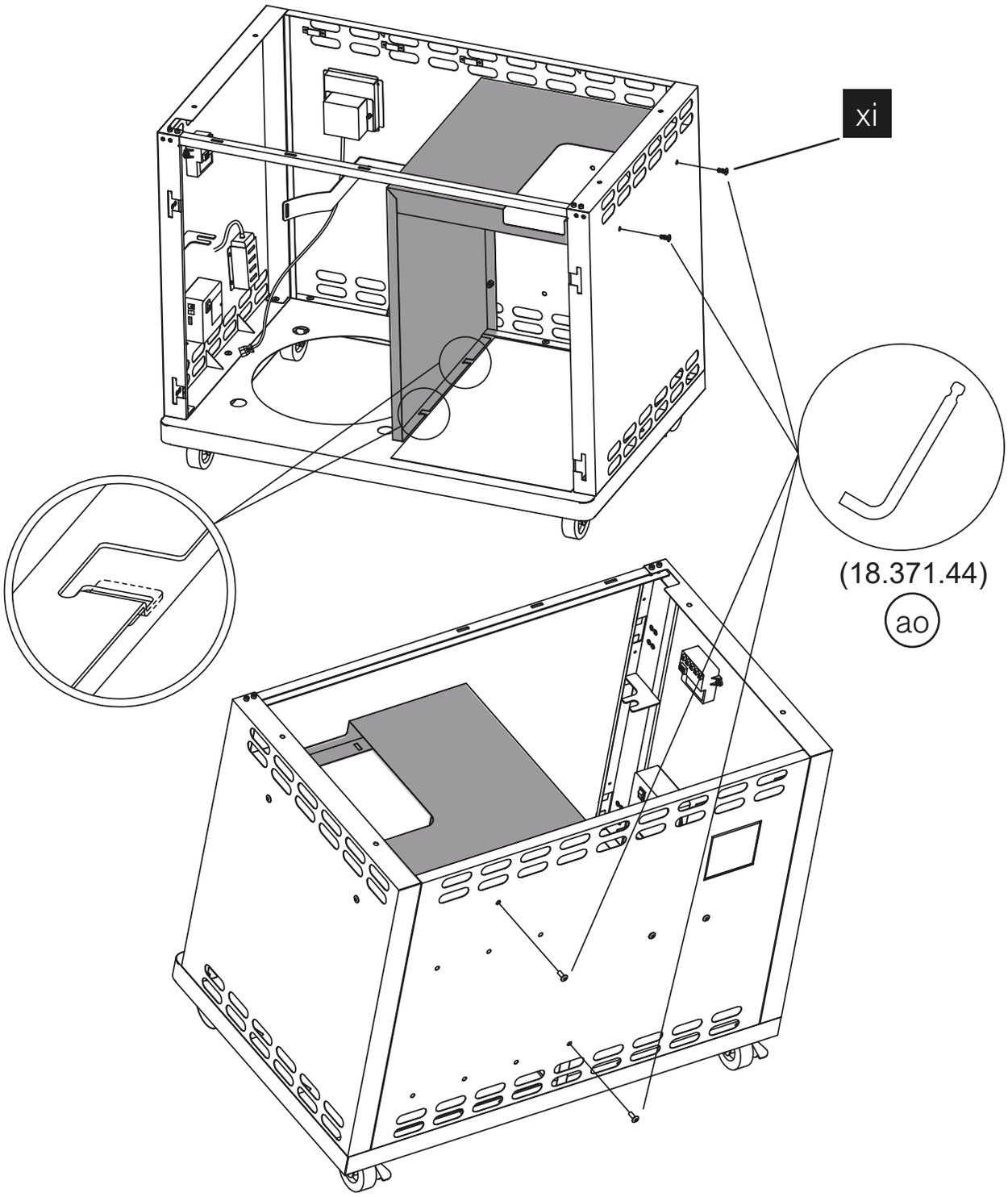

8.

xl 4 × (18.371.39)

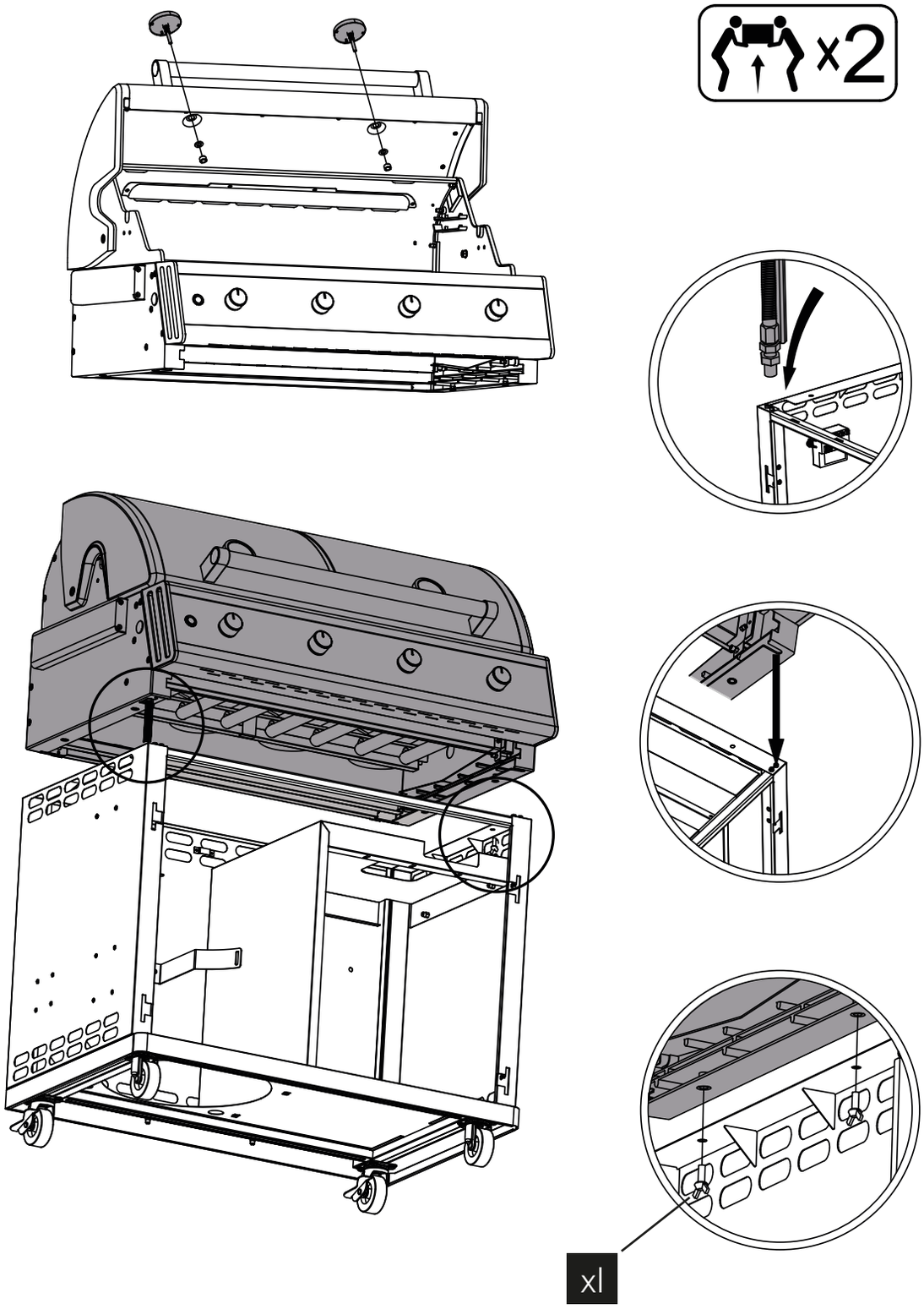

9.

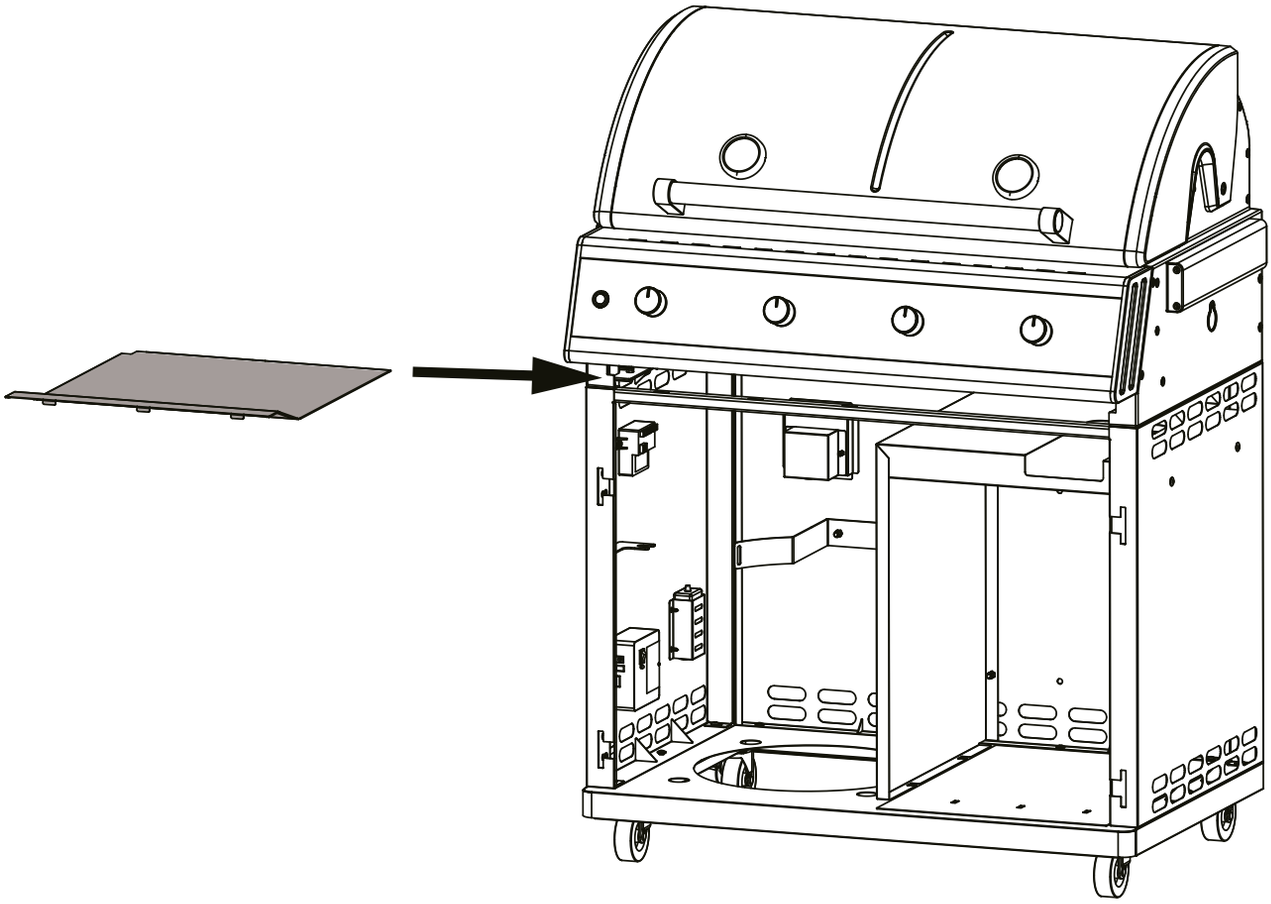

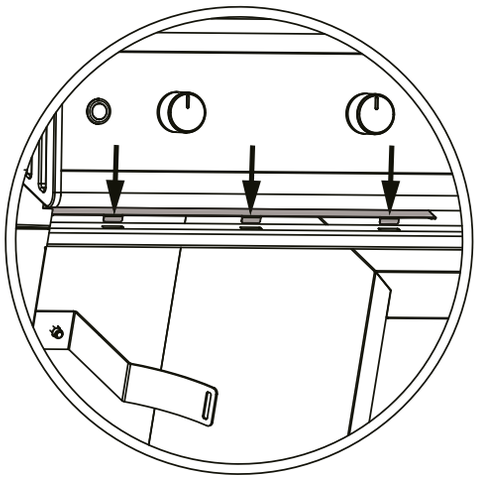

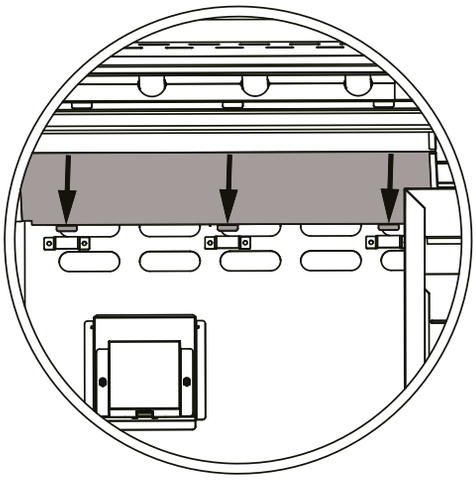

10.

xh	4× (18.371.35)	ak	4× (18.371.38)
xk	10× (18.371.37)		

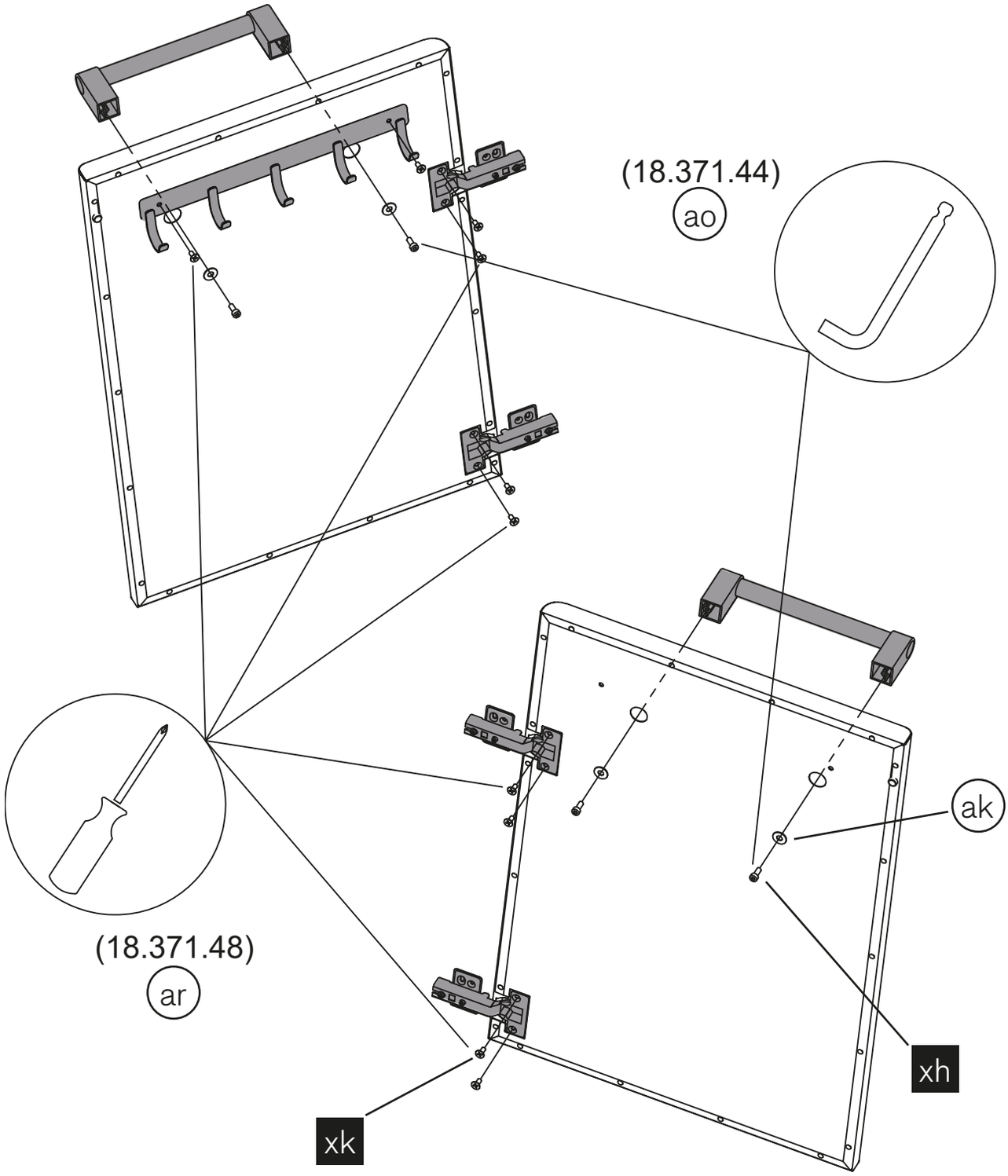

11.

xk 16× (18.371.37)

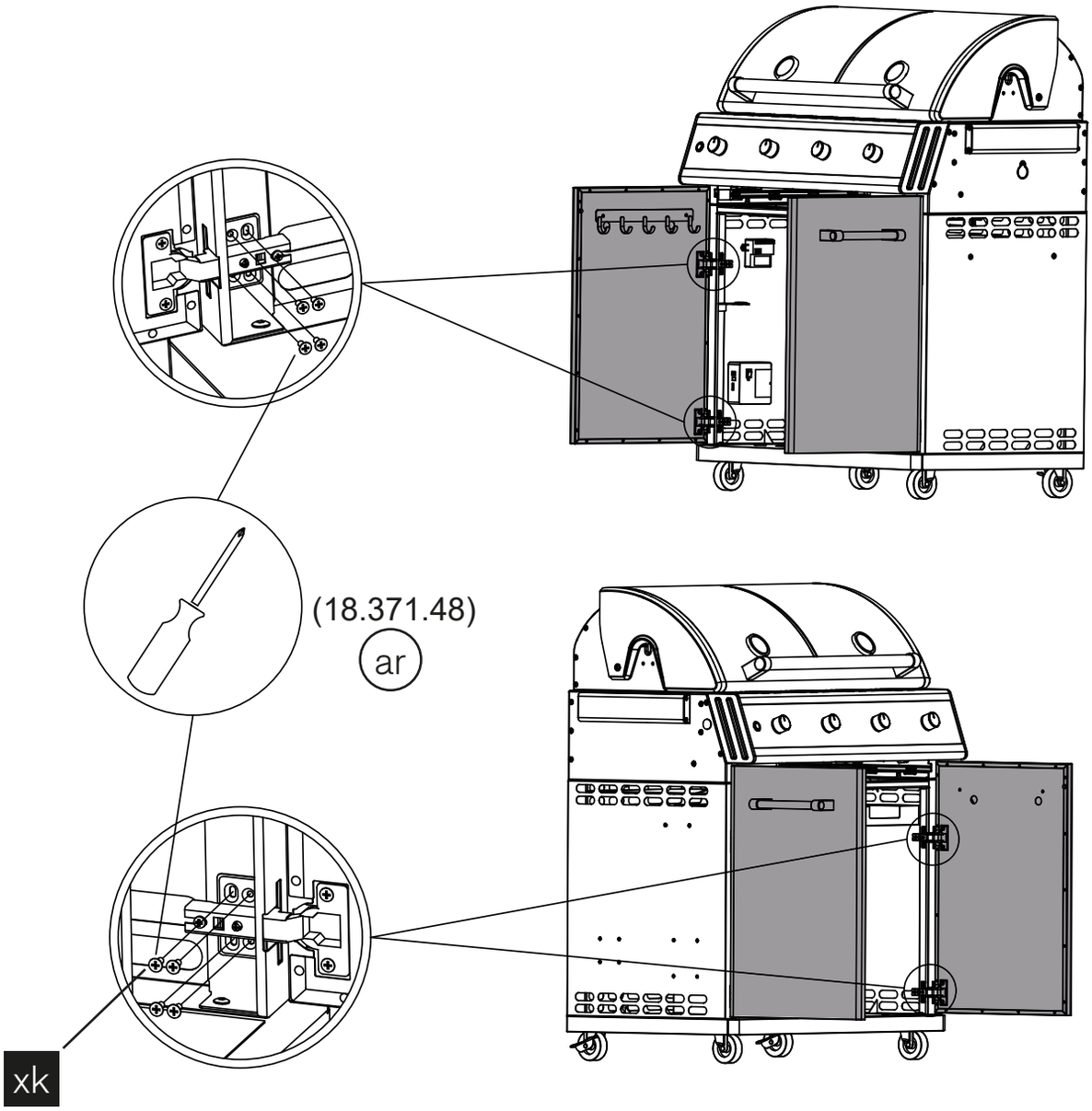

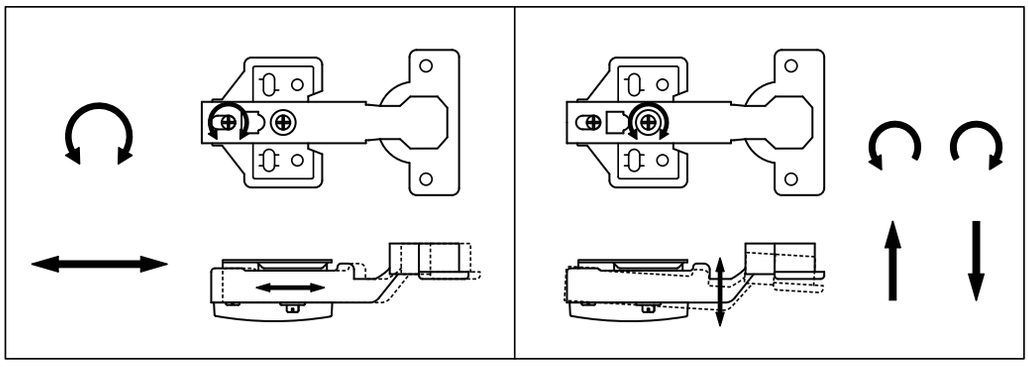

12.

xg 8× (18.371.34)

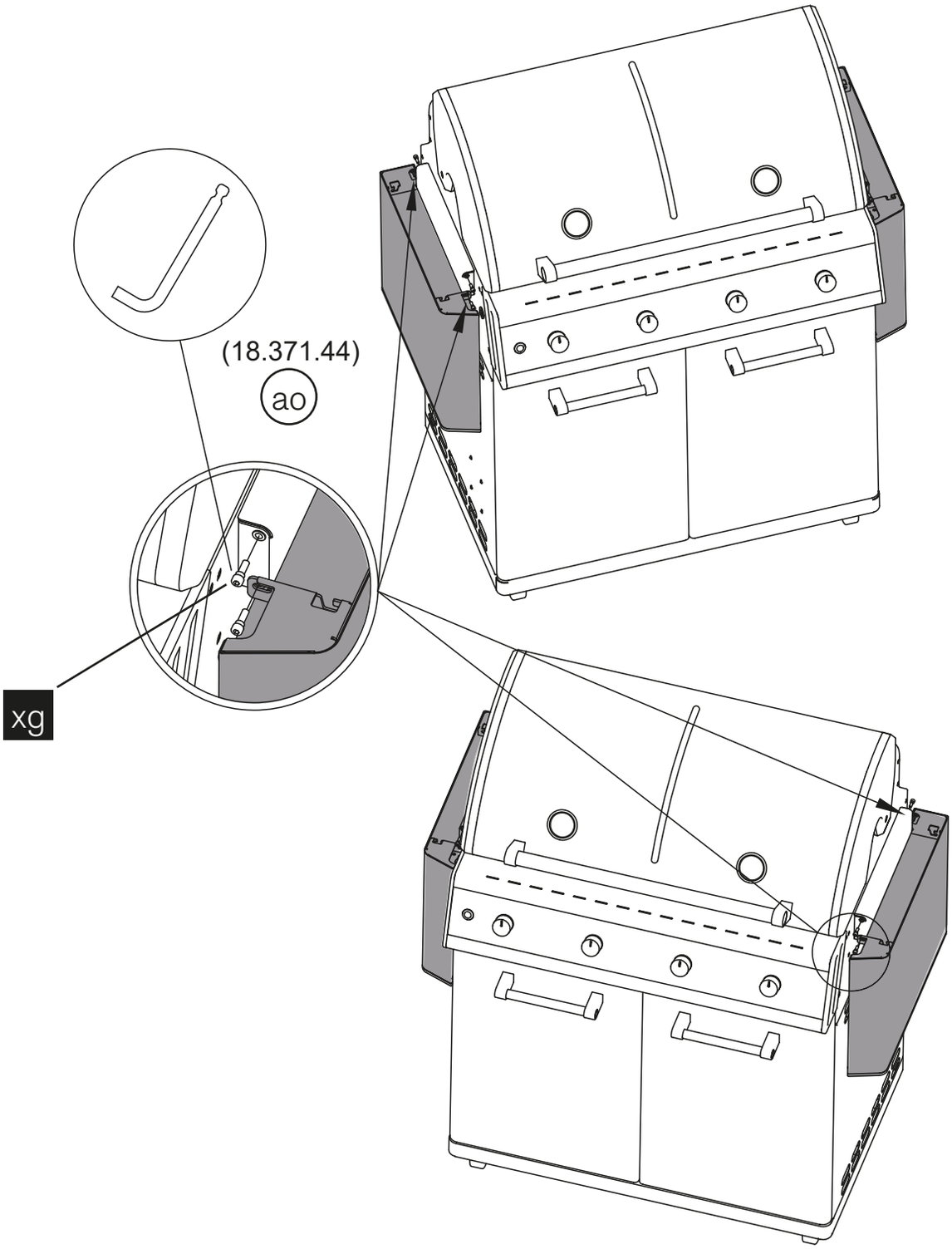

13.

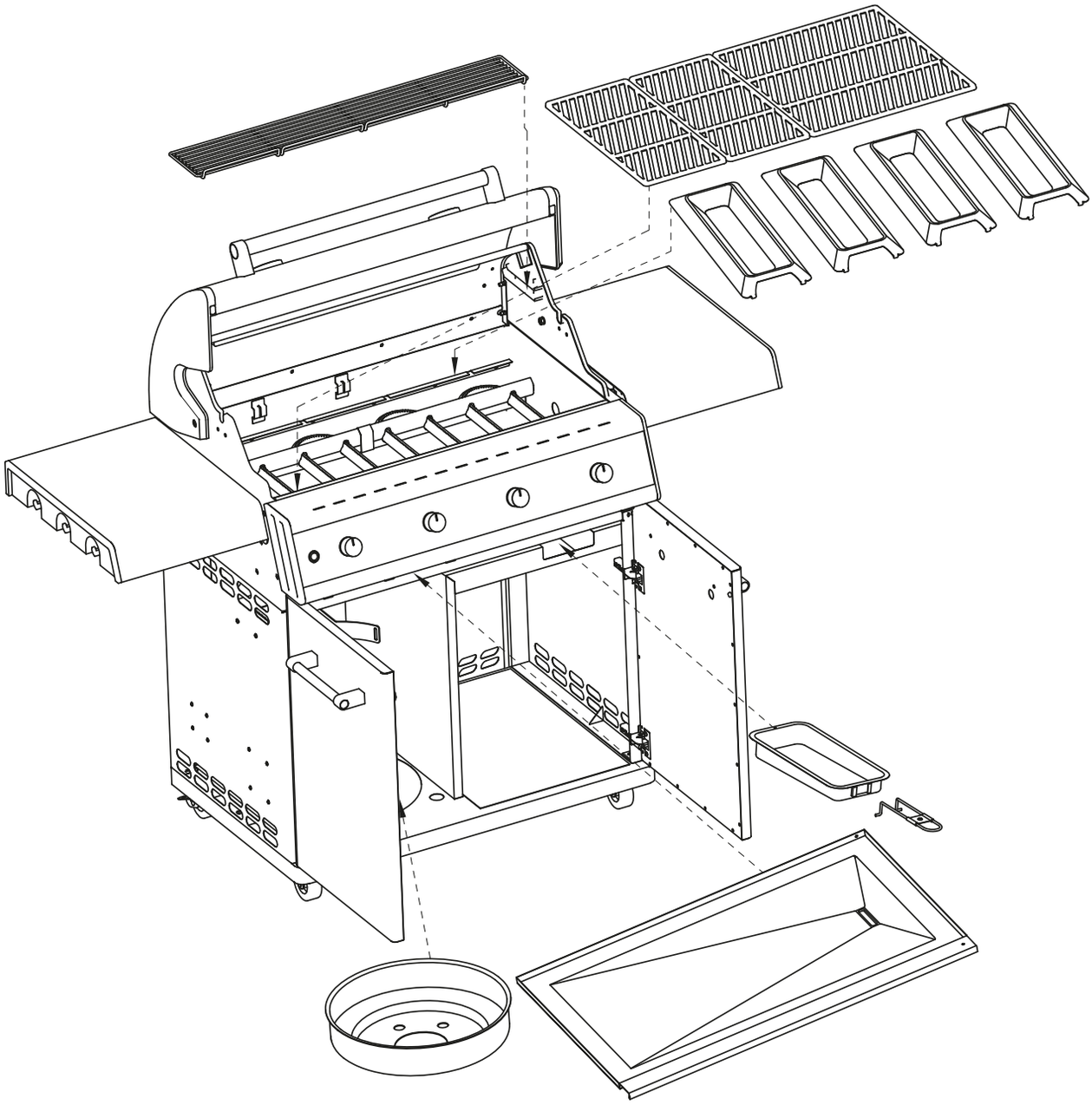

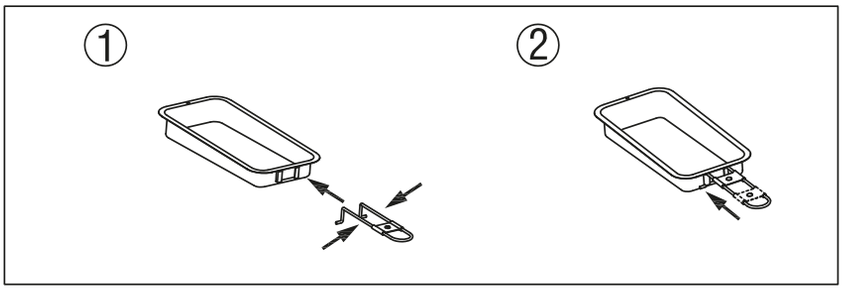

14.

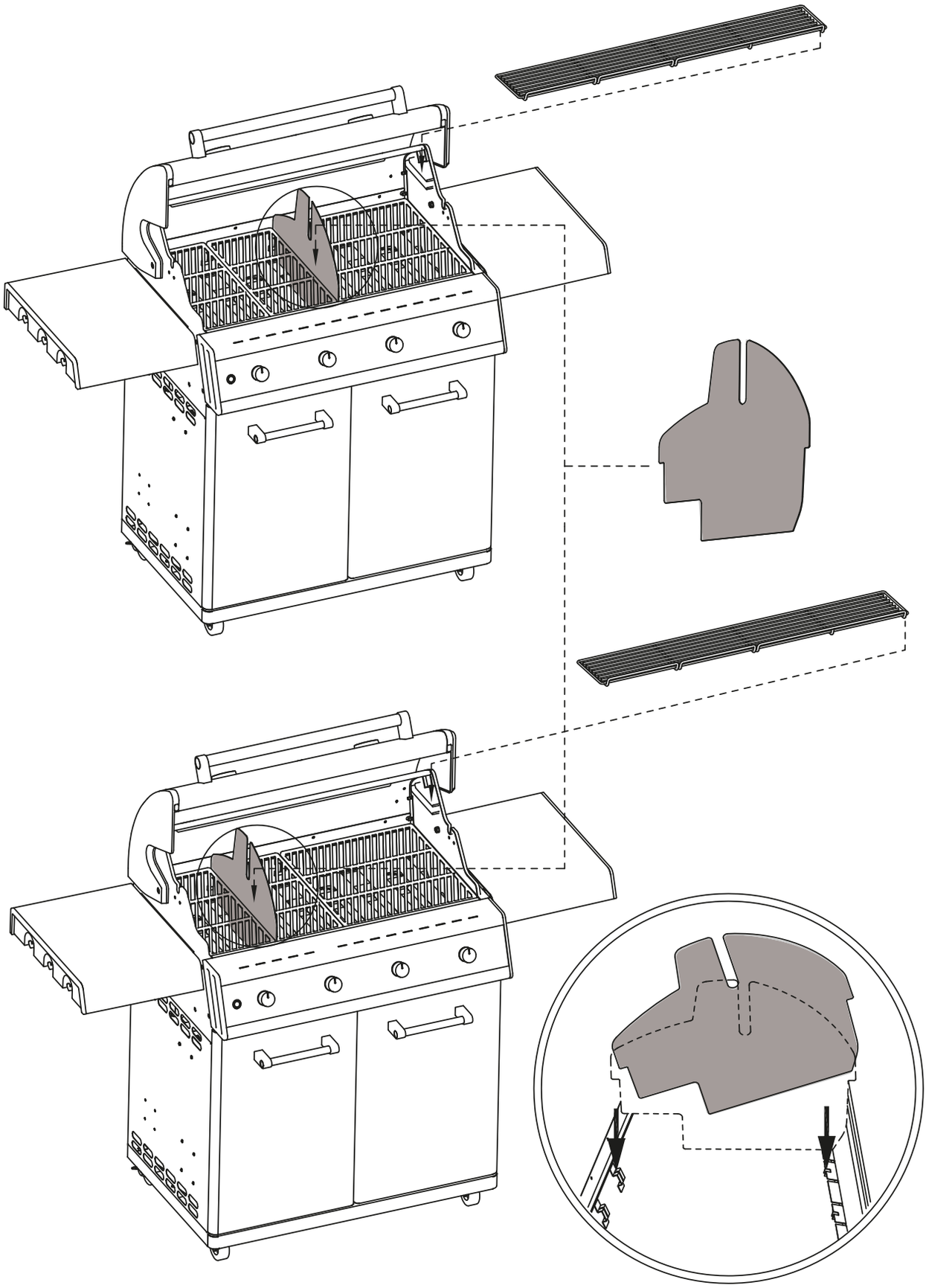

15.

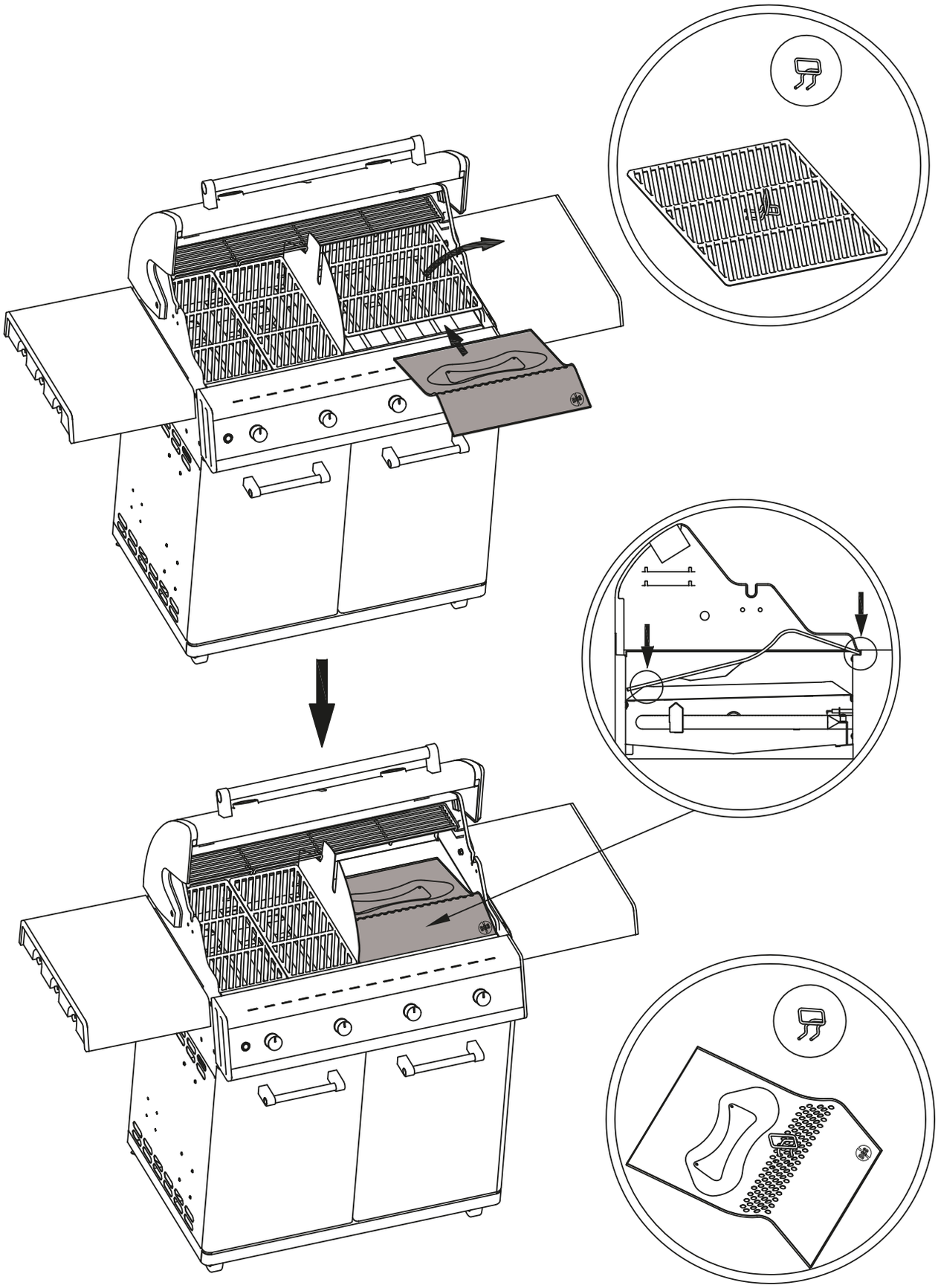

16.

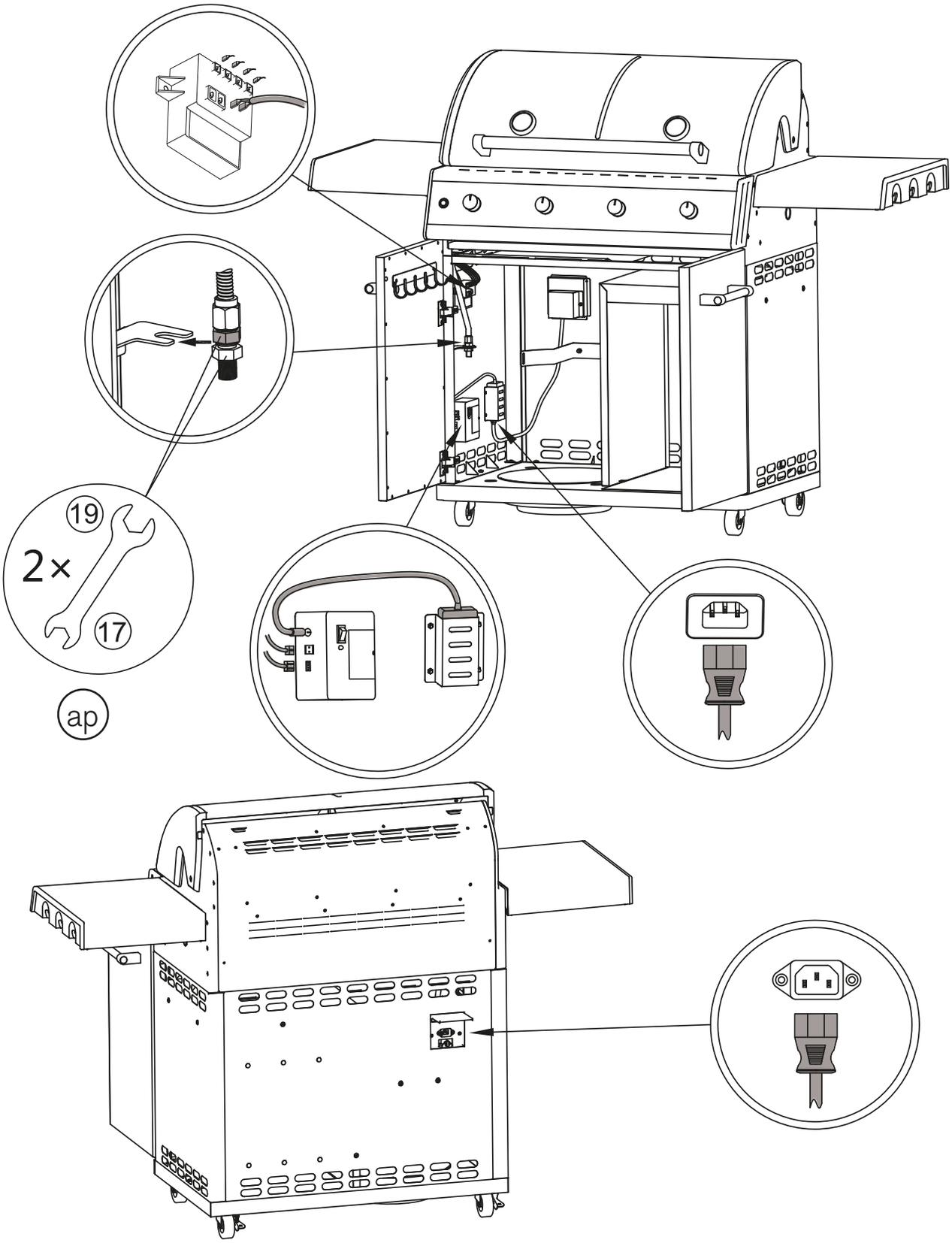

17.

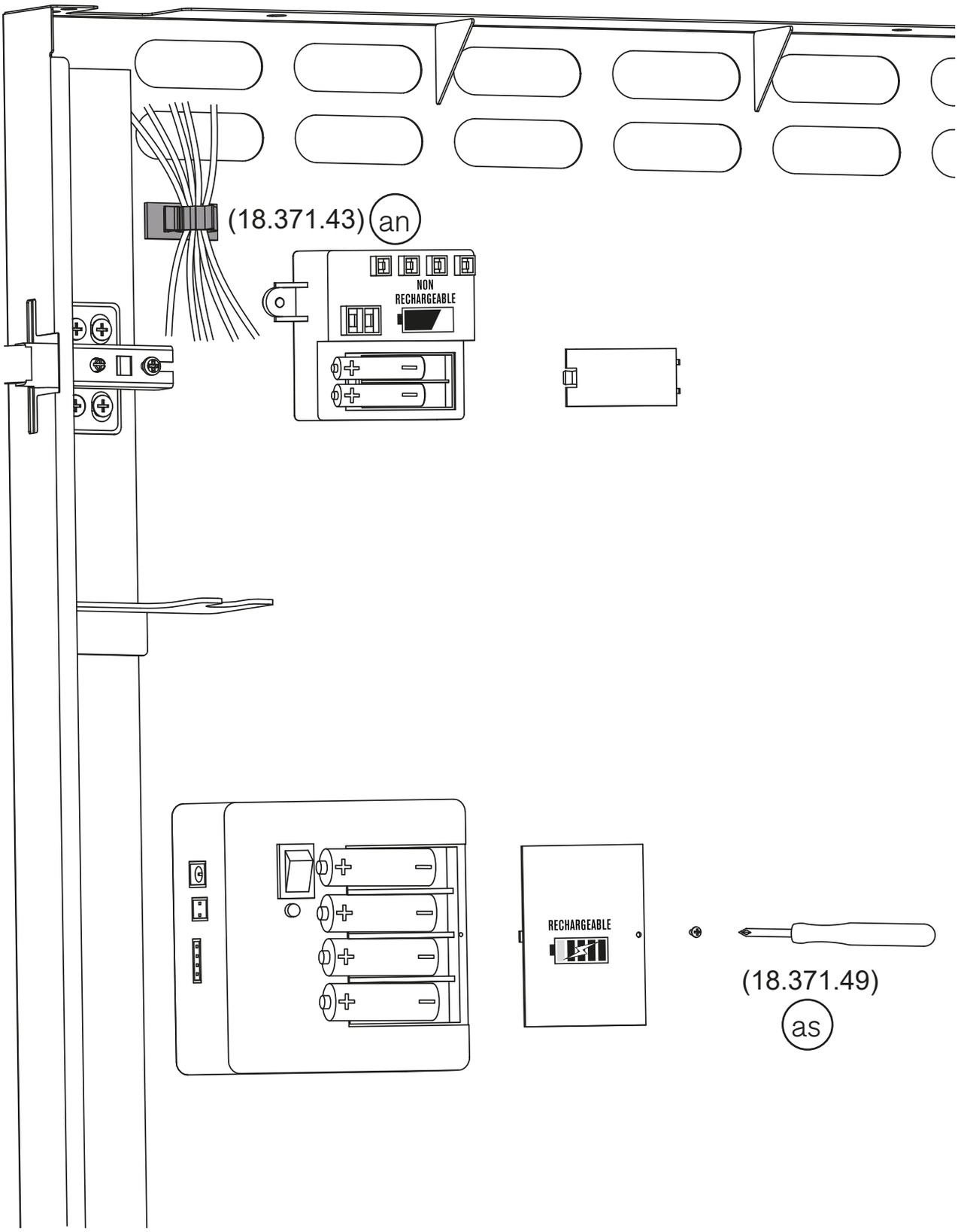

TO TAKE NOTES

TO TAKE NOTES

		SPAREPARTS	ERSATZTEIL-LISTE
Pos.	**Art. Nr.**	**Description**	**Beschreibung**
1	18.720.01	Lid, black	Deckel, schwarz
2	18.770.03	Lid handle tube	Deckelgriff
3	18.710.05	Heat indicator °C/°F - DGS®, complete	Temperatur Anzeiger °C/°F - DGS®, Komplett
4	18.740.00	Lid Protection pin set 4pcs.	Deckel Schutzstift Set 4 Stk.
5	18.710.07	Warming grid	Warmhalterost
6	18.710.00	Cooking grid small	Grillrost klein
7	18.710.01	Cooking grid big	Grillrost gross
8	18.790.00	Grid lifter	Grillrostheber
9	18.710.03	DGS® Zone Divider	DGS® Zone Divider
10	18.710.04	DGS® Heat Diffuser	DGS® Heat Diffuser
11	18.710.02	DGS® Protection Bars	DGS® Protection Bars
12	18.730.10	DGS® Twin Burner	DGS® Twin Burner
13	18.730.09	Burner fixation	Brennerbefestigung
14	18.720.05	BBQ Base	Grill Gehäuse
15	18.730.27	Control panel, 415 G / 30mbar	Bedienungskonsole 415 G / 30mbar
15	18.730.28	Control panel, 415 G / 50mbar	Bedienungskonsole 415 G / 50mbar
16	18.740.02	Control knob	Gasregulierknopf
17	18.730.19	Piezo electrode	Piezo-Elektrode
18	18.750.00	Side table, right	Seitentablar, rechts
19	18.750.01	Side table, left	Seitentablar, links
20	18.730.15	Puls ignition (4 outputs)	Elektrozündung (4 Ausgänge)
21	18.730.33	Ignition wire (B1 & B2 & SB)	Zündkabel (B1 & B2 & SB)
22	18.730.34	Ignition wire (B3 + B4)	Zündkabel (B3 + B4)
23	18.710.09	Collection sheet	Fettauffang-Blech
24	18.710.10	Drip pan	Fettauffangschale
25	18.710.12	Drip pan handle	Fettauffangschalengriff
26	18.760.00	Cabinet sheet left	Kastenwand links
27	18.760.01	Cabinet sheet right 4B	Kastenwand rechts 4B
28	18.760.05	Rear cabinet sheet 4B	Hintere Kastenwand 4B
29	18.760.08	Bottom sheet 415 + 425 G	Bodenplatte 415 + 425 G
30	18.322.29	Bottle jacket	Flaschenschale
31	18.760.24	Bottle fixation	Flaschenhalterung
32	18.760.11	Front bar	Frontbügel
33	18.760.14	Door left, black	Türe links, schwarz
34	18.760.16	Door right, black	Türe rechts, schwarz
35	18.770.02	Doorhinge	Türscharnier
36	18.770.05	Doorhandle	Türgriff
37	18.760.20	Accessories box 4B	Zubehörkasten 4B
38	18.740.05	Door protection pin set 2 pcs.	Türen Schutzstift Set 2 Stk
39	18.770.00	Caster	Lenkrolle
40	18.770.01	Caster with brake	Lenkrolle mit Bremse
41	18.780.00	Electronic box	Elektronikbox
42	18.780.01	Transformer	Transformator
43	18.780.03	Power cable E+F (EU) plug	Stromkabel E+F (EU) Stecker
43	18.780.05	Power cable J (CH) plug	Stromkabel J (CH) Stecker

		SPAREPARTS	ERSATZTEIL-LISTE
Pos.	**Art. Nr.**	**Description**	**Beschreibung**
44	18.740.04	Cable fixing clips	Kabelbefestigungsclips
45	18.360.14	Bottle strap	Flaschengurt
46	18.710.13	Cabinet cover	Kastenabdeckung
47	18.750.08	Side table support l&r	Seitentablarhalterung l&r
48	14.911.62	Adapter 5/8"UNF- 1/4"LH	Adapter 5/8"UNF - 1/4"LH
49	18.379.42	Hardware set	Schraubenset
50	individual	Gas hose	Gasschlauch
51	individual	Gas regulator	Gasdruck-Regler

Lesen Sie die Bedienungsanleitung sorgfältig durch, bevor Sie Ihren OUTDOOR**CHEF** Grill in Betrieb nehmen.
Please read the user guide carefully before using your OUTDOOR**CHEF** Barbeque.

Attention
Please write your serial number on the backside of the manual for future reference. You will find the number on the data plate attached to the trolley or the bottom plate depending on the grill model. OUTDOOR**CHEF** can only supply spare parts and honour warranty returns when the serial number is available.

Achtung
Bitte notieren Sie auf der Rückseite Ihrer Gebrauchsanweisung die Serien-Nummer. Je nach Grillmodell finden Sie die Nummer auf dem Datensticker, welcher sich entweder am Grillgestell oder auf der Bodenplatte befindet. OUTDOOR**CHEF** kann Garantie und Ersatzteillieferungen nur mit der Serien-Nummer bearbeiten.

Outdoorchef AG operates a policy of continuous product development and improvement.
As such we reserve the right to alter product design and or technical specification without giving any prior notice.