koala

serenity dining table

1.

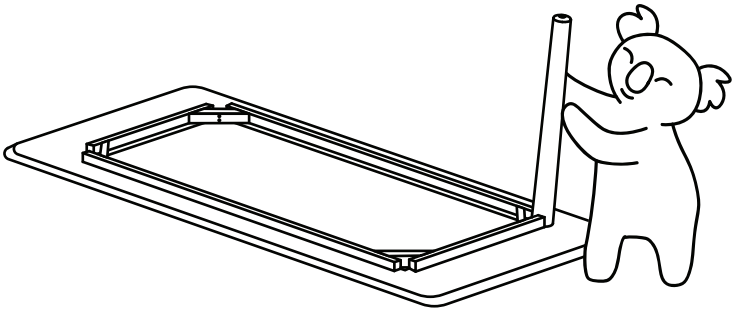

align leg with frame

2.

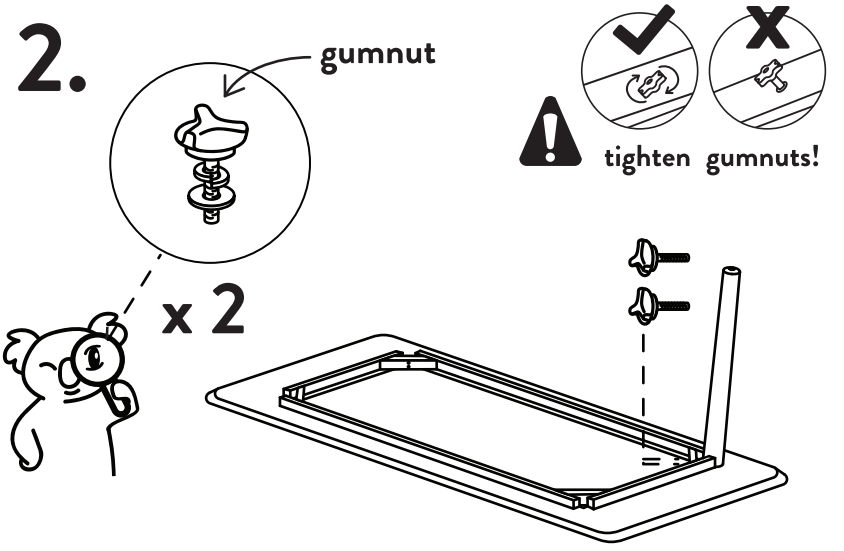

screw in gumnuts

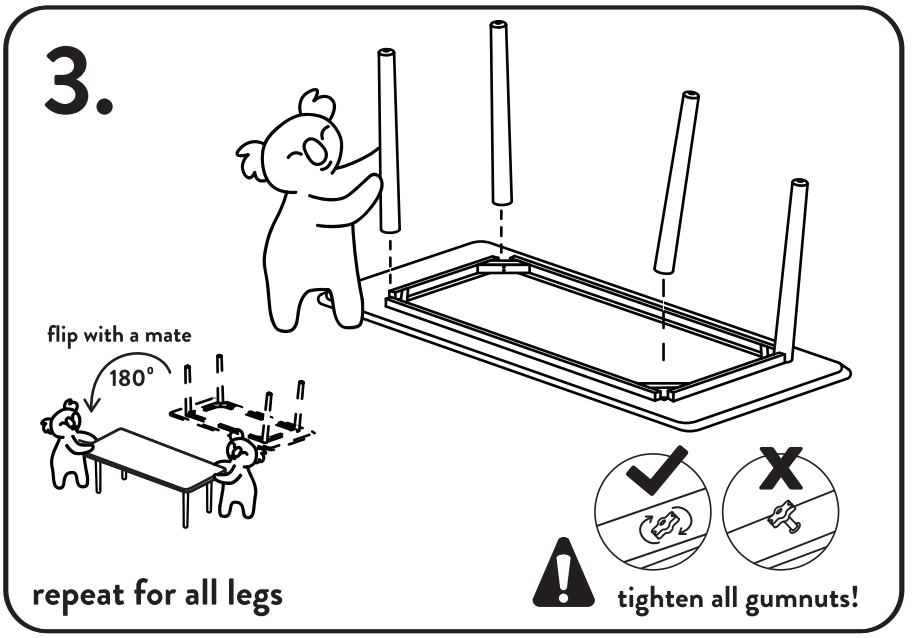
3.
flip with a mate
180°
repeat for all legs
tighten all gumnuts!

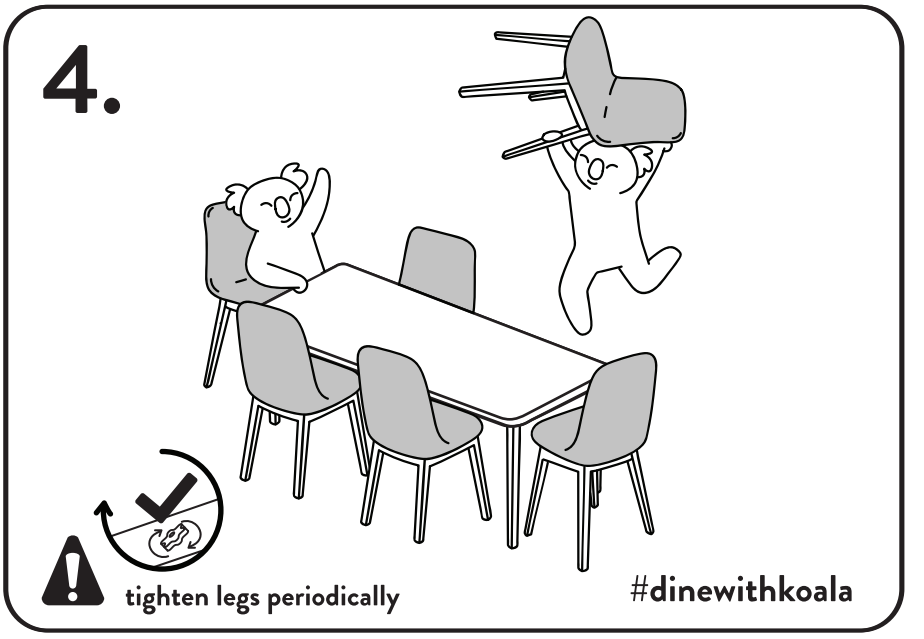
4.
tighten legs periodically
#dinewithkoala

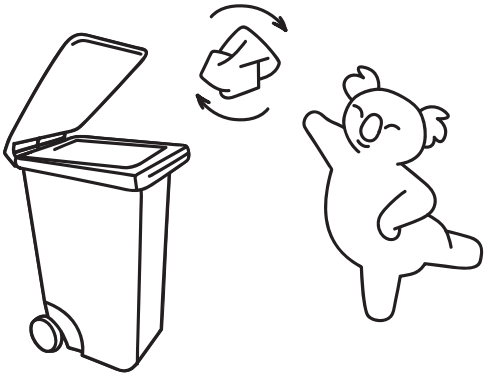

don’t forget to recycle

koala