CKD

New Addition - Cross Roller Type

New Products

Linear Slide Cylinder
LCV Series

CKD Corporation

C-CC-1367A

Engineered with Human-Centered Manufacturing in Mind

Applications

Ideal for Z-axis.

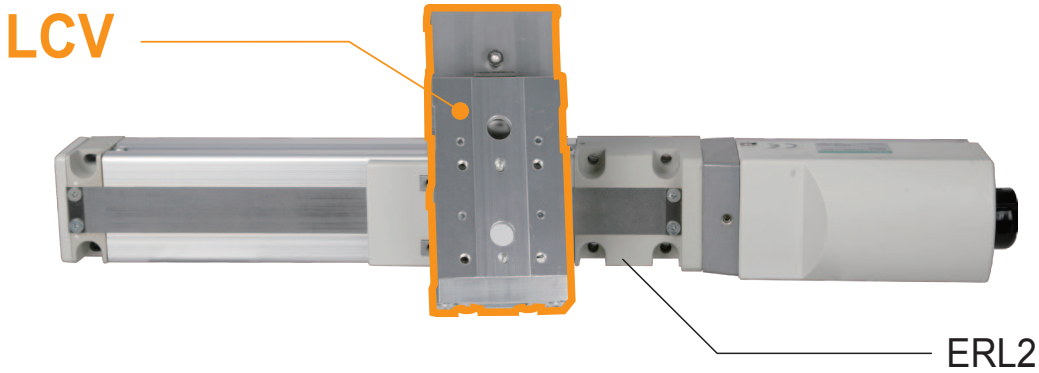

Pick / Place parts from pallets

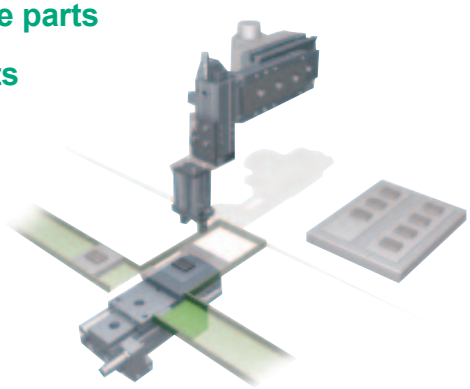

Convey parts

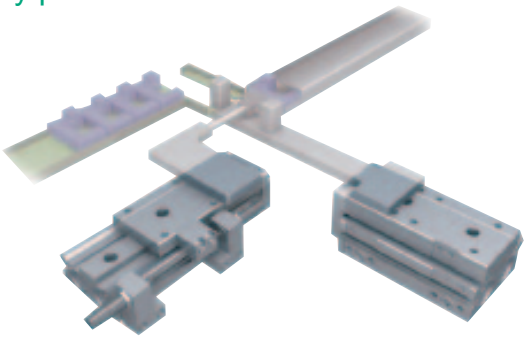

Laterally symmetric structure for all applications

Increased flexibility in design

Designing is more flexible with the multi-sided piping, two-sided installation, a standard positioning hole and laterally symmetrical configuration.

Switching to a laterally symmetrical configuration is possible

➡ ⬅ show the piping direction.

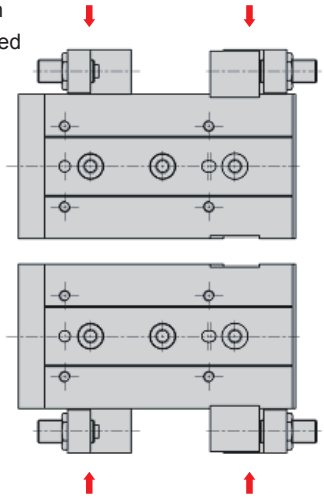

Wide variety of options

Options available include rubber cushion stopper, rubber cushion metal stopper and shock absorber stopper.

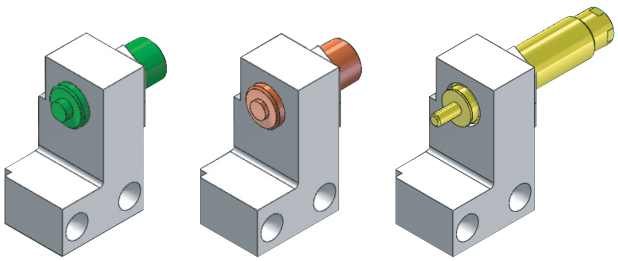

Rubber cushion stopper

Rubber cushion metal stopper

Shock absorber stopper

RoHS

CKD Green Technology

Available with short stroke / high tact SKL shock absorber with long life

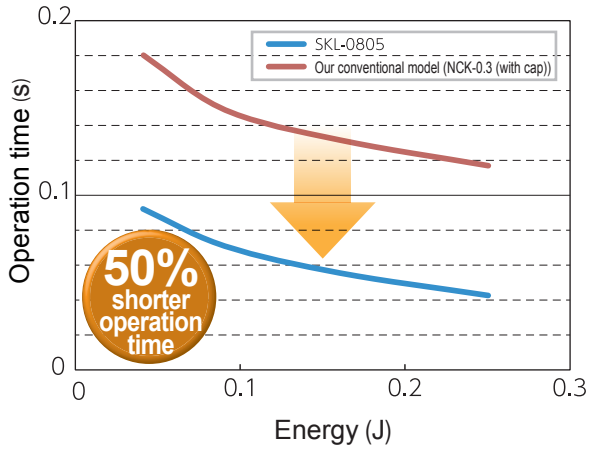

*Data is reference values at cylinder thrust 160 N, room temperature. Operating time varies according to collision conditions.

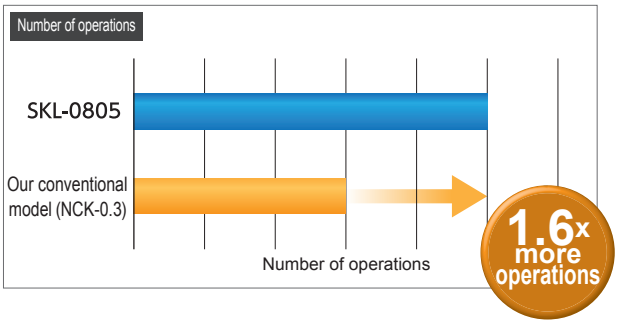

Uses a cross-roller guide with cylindrical roller to achieve high rigidity

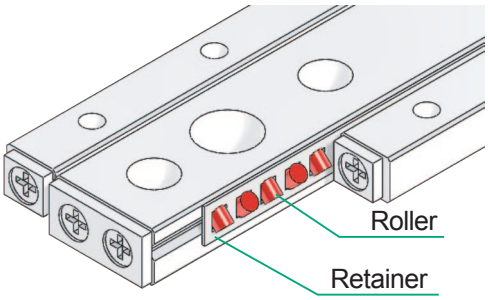

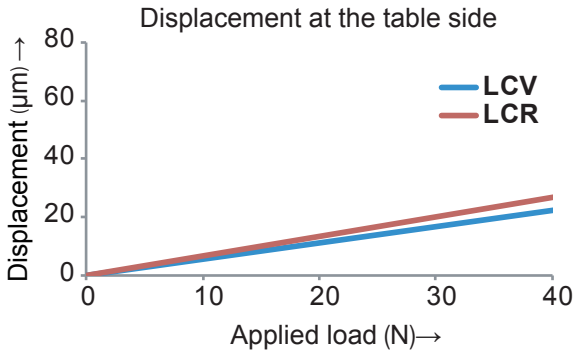

Series variation

Model series	Bore size	Stroke length (mm)									Rubber cushion stopper	Rubber cushion metal stopper	Shock absorber stopper	Switch
		10	20	30	40	50	75	100	125	150	D*	S*	A*	
 LCV	φ6	●	●	●	●	●	●	●	●	●	●	●	●	●
	φ8	●	●	●	●	●	●	●	●	●	●	●	●	●
	φ12	●	●	●	●	●	●	●	●	●	●	●	●	●
	φ16	●	●	●	●	●	●	●	●	●	●	●	●	●
	φ20	●	●	●	●	●	●	●	●	●	●	●	●	●
	φ25	●	●	●	●	●	●	●	●	●	●	●	●	●

*Stoppers are optional.

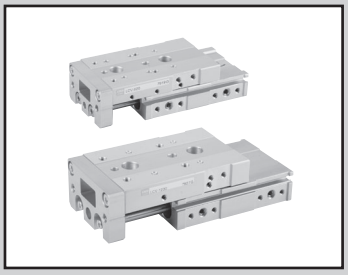

Linear Slide Cylinder Double acting/Single rod

LCV Series

● Bore size:φ6,φ8,φ12,φ16,φ20,φ25

JIS symbol 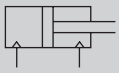

RoHS

Specifications

Item	LCV					
Bore size mm	φ6	φ8	φ12	φ16	φ20	φ25
Operation	Double acting					
Working fluid	Compressed air					
Max. working pressure MPa	0.7					
Min. working pressure MPa	0.15 (*1)					
Proof pressure MPa	1.05					
Ambient temperature °C	-10 to 60 (no freezing)					
Port size	M3	M5				Rc1/8
Stroke tolerance mm	$^{+2.0}_{0}$ (*2)					
Working piston speed mm/s	50 to 500 (*3)					
Cushion	With rubber cushion					
Lubrication	Not required (use turbine oil class 1 ISO VG32 if necessary for lubrication)					
Allowable absorbed energy J	Refer to Table 3 on Page 16.					

*1: For φ6 shock absorber stopper, this value will be 0.2 MPa.
*2: Note that there will be a slight gap between the plate and floating bush if no stopper is attached.
*3: Keep within 50 to 200 mm/s when using a rubber cushion metal stopper.
*4: The rubber cushion metal stopper for 0.3 MPa and over working pressure is the metal sealing type.

Stroke length

Bore size (mm)	Standard stroke (mm)
φ6	10, 20, 30, 40, 50
φ8	10, 20, 30, 40, 50, 75
φ12	10, 20, 30, 40, 50, 75, 100
φ16	10, 20, 30, 40, 50, 75, 100, 125
φ20	10, 20, 30, 40, 50, 75, 100, 125, 150
φ25	10, 20, 30, 40, 50, 75, 100, 125, 150

*: Products with stroke lengths other than the above are not available.

Switch specifications

* The T0/T5 switch can also be used with 220 VAC.
Consult with CKD for operating conditions.

● 1-color/2-color display

Item	Reed 2-wire				Proximity 2-wire		Proximity 3-wire	
	T0H/T0V		T5H/T5V		T2H/T2V	T2WH/T2WV	T3H/T3V	T3WH/T3WV
Applications	For PLC and relay		For PLC, relay IC circuit (without indicator lamp), serial connection		Dedicated for PLC		For PLC and relay	
Output mode	-		-		-		NPN output	
Power supply voltage	-		-		-		10 to 28 VDC	
Load voltage	12/24 VDC	110 VAC	5/12/24 VDC	110 VAC	10 to 30 VDC	24 VDC ± 10%	30 VDC or less	
Load current	5 to 50 mA	7 to 20 mA	50 mA or less	20 mA or less	5 to 20 mA		100 mA or less	50 mA or less
Indicator lamp	LED (Lit when ON)		Without indicator lamp		LED (Lit when ON)	Red/green LED (Lit when ON)	LED (Lit when ON)	Red/green LED (Lit when ON)
Leakage current	0 mA				1 mA or less		10 μA or less	

Item	Proximity 2-wire	Proximity 3-wire	Proximity 2-wire		Proximity 3-wire	
	F2S	F3S	F2H/F2V	F2YH/F2YV	F3H/F3V	F3YH/F3YV
Applications	Dedicated for PLC	For PLC and relay	Dedicated for PLC		For PLC and relay	
Output mode	-	NPN output	-		NPN output	
Power supply voltage	-	10 to 28 VDC	-		10 to 28 VDC	
Load voltage	10 to 30 VDC	30 VDC or less	10 to 30 VDC	24 VDC ± 10%	30 VDC or less	
Load current	5 to 20 mA	50 mA or less	5 to 20 mA		100 mA or less	50 mA or less
Indicator lamp	Red LED (Lit when ON)		LED (Lit when ON)	Red/green LED (Lit when ON)	LED (Lit when ON)	Red/green LED (Lit when ON)
Leakage current	1 mA or less	10 μA or less	1 mA or less		10 μA or less	

Cylinder weight

● Basic

(Unit: g)

Bore size (mm)	Basic stroke (mm)								
	10	20	30	40	50	75	100	125	150
φ6	100	120	130	160	180				
φ8	170	180	210	240	280	400			
φ12	360	370	370	420	490	680	920		
φ16	610	610	620	680	750	1040	1350	1640	
φ20	1060	1070	1080	1200	1290	1620	2120	2580	3110
φ25	1630	1640	1660	1810	1970	2460	3030	3770	4370

● Additional weight of options

(Unit: g)

Bore size (mm)	Option/stopper code			
	S1 to S4 D1 to D4	S5 to S6 D5 to D6	A1 to A4	A5/A6
φ6	30	40	40	50
φ8	40	60	50	70
φ12	70	100	80	110
φ16	110	150	120	160
φ20	170	250	180	270
φ25	290	380	300	400

How to order

Without switch

LCV - 8 - 40 ——— S5

With switch

LCV - 12 - 40 - F2H* - R - A1D

Model No.

Ⓐ Bore size

Ⓑ Stroke length

Ⓒ Switch model No. *11

Ⓓ Switch quantity

Ⓔ Option

Code	Descriptions
Ⓐ Bore size	
6	φ6
8	φ8
12	φ12
16	φ16
20	φ20
25	φ25

Ⓑ Stroke (mm)

		Bore size (φ)					
		6	8	12	16	20	25
10	10	●	●	●	●	●	●
20	20	●	●	●	●	●	●
30	30	●	●	●	●	●	●
40	40	●	●	●	●	●	●
50	50	●	●	●	●	●	●
75	75		●	●	●	●	●
100	100			●	●	●	●
125	125				●	●	●
150	150					●	●

Ⓒ Switch model No.

Axial lead wire	Radial lead wire	Contact	Display	Lead wire	Bore size φ6	φ8	φ12	φ16	φ20	φ25
F2S		Proximity	1-color display	2-wire	●	●	●			
F3S				3-wire						
F2H *	**F2V ***			2-wire						
F3H *	**F3V ***			3-wire						
F2YH *	**F2YV ***		2-color display	2-wire						
F3YH *	**F3YV ***			3-wire						
T0H *	**T0V ***	Reed	1-color display	2-wire				●	●	●
T5H *	**T5V ***		No indicator lamp							
T2H *	**T2V ***	Proximity	1-color display	2-wire						
T3H *	**T3V ***			3-wire						
T2WH *	**T2WV ***		2-color display	2-wire						
T3WH *	**T3WV ***			3-wire						

***Lead wire length**

Blank	1 m (standard)			●			
3	3 m (option)			●			
5	5 m (option)					●	

Ⓓ Switch quantity

R	1 on rod side
H	1 on head side
D	2 pcs. included

Ⓔ Option

Blank	No option	
S Rubber cushion metal stopper		*1, *5
S1 **	Stopper position ① (can be changed to ④)	Stopper mounting
S2 **	Stopper position ② (can be changed to ③)	
S3 **	Stopper position ③ (can be changed to ②)	
S4 **	Stopper position ④ (can be changed to ①)	
S5 **	Stopper positions ① and ③	
S6 **	Stopper positions ② and ④	
D Rubber cushion stopper		*1, *5
D1 **	Stopper position ① (can be changed to ④)	Stopper mounting
D2 **	Stopper position ② (can be changed to ③)	
D3 **	Stopper position ③ (can be changed to ②)	
D4 **	Stopper position ④ (can be changed to ①)	
D5 **	Stopper positions ① and ③	
D6 **	Stopper positions ② and ④	
A Shock absorber stopper		*2, *5
A1 **	Stopper position ① (can be changed to ④)	Stopper mounting
A2 **	Stopper position ② (can be changed to ③)	
A3 **	Stopper position ③ (can be changed to ②)	
A4 **	Stopper position ④ (can be changed to ①)	
A5 **	Stopper positions ① and ③	
A6 **	Stopper positions ② and ④	
**** part**		
Blank	Stopper port: none	
D	Stopper port: with side and bottom ports	*3
With Plug		
Blank	None	
N	With plugs for side piping ports (cannot be selected for φ6 and φ25.)	

⚠ Precautions for model selection

*1: To change the adjustable stroke range, use the discrete rubber cushion metal stopper or rubber cushion stopper on page 6.
*2: For the adjustable stroke range with a shock absorber stopper, refer to the stopper dimensions table on page 15.
*3: For the port position, refer to the stopper dimensions on page 15.
*4: Without the stopper, the positions of standard ports are shown as ① and ③ in the figure below.
*5: For the combined use of three types of stoppers, order separately.
*6: A1**, A2**, A5** and A6** of φ6 to φ8 with 10 mm stroke length or less and φ12 to φ25 with 20 mm stroke length or less are custom orders since adjustment is not possible with the standard stopper.
*7: For S ***, D *** and A *** of φ6 to φ8 with 30 mm stroke length or less, if two switches are used, select F □ H type switch.
*8: F2S and F3S switches are delivered along with products. For delivery after installation, consult CKD sales personnel.

[Example of model number]

LCV-12-40-F2H-R-A1D

Model: Linear slide cylinder double acting/single rod

A Bore size : φ12
B Stroke length : 40 mm
C Switch model No. : Proximity, 2-wire
Axial lead wire
D Switch quantity : 1 on rod side
E Option : Shock absorber
Stopper position ①
With side and bottom ports

● Stopper position

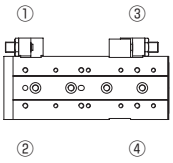

LCV Double acting/single rod selection table

(Combination of various stoppers)

○ : Available —: Not available

Model code	Option code		Rubber cushion metal stopper						Rubber cushion stopper						Shock absorber stopper					
	Bore size	Stroke (mm)	S1	S2	S3	S4	S5	S6	D1	D2	D3	D4	D5	D6	A1	A2	A3	A4	A5	A6
LCV	φ6, φ8	10	○	○	○	○	○	○	○	○	○	○	○	○	—	—	○	○	—	—
		20 or more	○	○	○	○	○	○	○	○	○	○	○	○	○	○	○	○	○	○
	φ12 to φ25	10 to 20	○	○	○	○	○	○	○	○	○	○	○	○	—	—	○	○	—	—
		30 or more	○	○	○	○	○	○	○	○	○	○	○	○	○	○	○	○	○	○

How to order switch

For φ6 to φ12

SW - F2H

Switch model No.
(Ⓒ on page 3)

For φ16 to φ25

SW - T2H3

Switch model No.
(Ⓒ on page 3)

● For cushioning

SW - F 2 V 3

Output	
2	DC, 2-wire, proximity
3	DC, 3-wire, proximity

Radial lead wire

Lead wire length	
Blank	1 m (standard)
3	3 m (option)

How to order stopper set

- Set of stopper part and rubber cushion stopper, rubber cushion metal stopper or shock absorber stopper
- Used when standard stopper is changed to rubber cushion stopper, rubber cushion metal stopper or shock absorber stopper

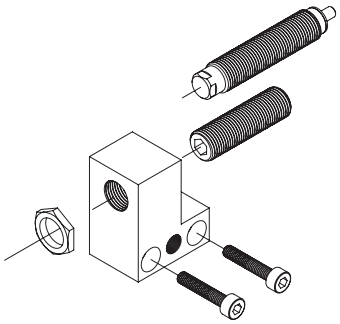

LCV - 12 - S 2 D - S02

Bore size
(Ⓐ on page 3)

Ⓐ Stopper type	
S	Stroke adjusting stopper
D	Rubber cushion stopper
A	Shock absorber stopper

Ⓑ Stopper mounting position	*1
1	For stopper position ① or ④
2	For stopper position ② or ③

Ⓒ Stopper port	
Blank	Without port
D	With side and bottom ports

Ⓓ Adjustable stroke	*2, *3
S01	Adjustable stroke range 5 mm
S02	Adjustable stroke range 15 mm
S03	Adjustable stroke range 25 mm
D01	Adjustable stroke range 5 mm
D02	Adjustable stroke range 15 mm
D03	Adjustable stroke range 25 mm

*1: When installing in ① or ② stopper mounting position, the stroke causes changes in the adjustable stroke length; see the table below.
*2: φ6 is not available for "S03" and "D03".
*3: Not available for shock absorber stopper "A".

Precautions when purchasing the stopper set

The discrete stopper in the stopper set is equipped with built-in S01/D01.
When installed in the ① or ② position only (refer to page 3), the part shown on the right can be added according to the stroke length and adjustable stroke length.

▶

— : Not applicable

Model code	Option code		Discrete stopper Adjustable stroke length (mm)		
	Bore size	Stroke length	-5	-15	-25
LCV series	φ6	All	S01/D01	S02/D02	—
	φ8	All	S01/D01	S02/D02	S03/D03
	φ12 to φ25	10	S03/D03	—	—
		20	S02/D02	S03/D03	—
		30 or more	S01/D01	S02/D02	S03/D03

How to order discrete stopper bracket

- Used when changing between □1(□3)↔□2(□4) or when changing to the stopper with port.
  □: SA

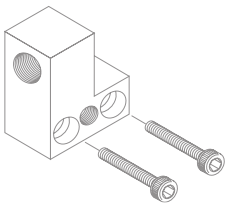

LCV - 12 - STB 1 D

Bore size
(Ⓐ on page 3)

Ⓐ Stopper mounting position	
1	For stopper position ① or ④
2	For stopper position ② or ③

Ⓑ Stopper port	
Blank	No port
D	With side and bottom ports

* Bottom port is plug-sealed.
When using the bottom port with φ25, buy a plug kit (LCV-25-N 2 pieces/set) and seal the side surface ports before using.

● **Stopper bracket weight** (Unit: g)

Stopper mounting	1,2
Stopper port	Blank, D
φ6	8
φ8	14
φ12	20
φ16	29
φ20	53
φ25	62

How to order rubber cushion metal stopper or rubber cushion stopper

- Hexagon socket set screw stopper with urethane
- Used when changing the adjustable stroke range or setting the custom stroke length.

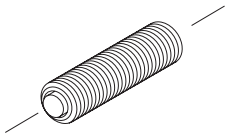

LCV - 12 - S02

Bore size
(Ⓐ on page 3)

Ⓐ Adjustable stroke range	
S01	One side, 5 mm (standard)
S02	One side, 15 mm
S03	One side, 25 mm
D01	One side, 5 mm (standard)
D02	One side, 15 mm
D03	One side, 25 mm

*: φ6 is not available for S03 and D03.
Some models may not be available and adjustable stroke range may differ from the above depending on the Model No.

Precautions when purchasing the discrete stopper

When a discrete stroke adjusting stopper or a discrete shock absorber stopper is installed in the ① or ② position (refer to page 3), the combination will be as shown on the right according to the stroke length and adjustable stroke length.

— : Not available

Model code	Option code		Discrete stopper Adjustable stroke length (mm)		
	Bore size	Stroke length	-5	-15	-25
LCV series	φ6	All	S01/D01	S02/D02	—
	φ8	All	S01/D01	S02/D02	S03/D03
	φ12 to φ25	10	S03/D03	—	—
		20	S02/D02	S03/D03	—
		30 or more	S01/D01	S02/D02	S03/D03

How to order the discrete shock absorber stopper

- Set of shock absorber and stopper cover
- Used when changing stroke adjusting stopper to shock absorber stopper

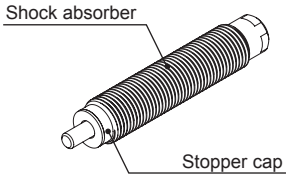

LCV - 12 - A01

Bore size
(Ⓐ on page 3)

*: Some models may not be available. Refer to page 3. For the adjustable stroke range with a shock absorber stopper, refer to page 15.

Applicable shock absorber model No.

Model	Shock absorber model No.	Weight (g)
LCV-6	SKL-0804	9
LCV-8	SKL-0805	12
LCV-12	SKL-0805	12
LCV-16	SKL-1006	19
LCV-20	SKL-1208	31
LCV-25	SKL-1208	31

How to order the discrete stopper block

- Used when changing from the standard to the stroke adjusting stopper or shock absorber stopper

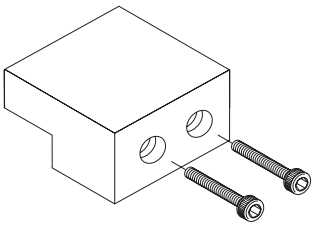

LCV - 12 - SB

Bore size
(Ⓐ on page 3)

Ⓐ Stopper block	
SB	For φ6 to φ16
SB1	φ20, 25: for stroke length≤75
SB2	φ20, 25: for stroke length≥100

Model No. of plug kit for side piping port

LCV - 12 - N (2 pieces/set)

Bore size
(Ⓐ on page 3)

Internal structure and parts list

● LCV

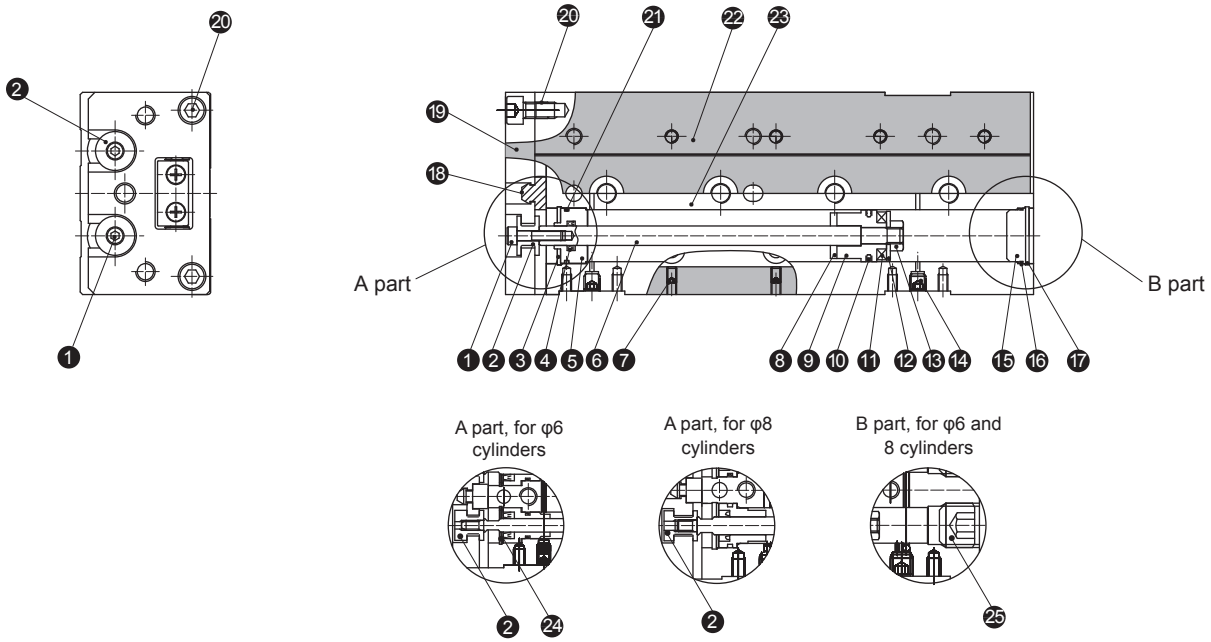

Parts list

No.	Part name	Material	Remarks	No.	Part name	Material	Remarks
1	Hexagon bolt	Alloy steel	Zinc chromate	14	Plug	Stainless steel	φ6 to φ20
2	Floating bush	Stainless steel				Steel	φ25
3	C snap ring	Steel		15	Head cover	Aluminum alloy	Aluminum chromate
4	Rod sealant	Nitrile rubber		16	Head cover seal ring	Nitrile rubber	
5	Rod cover	Aluminum alloy	Alumite	17	C snap ring	Steel	For φ12 to φ25 only
6	Piston rod	Stainless steel		18	Cushion rubber (H)	Polyurethane rubber	
7	Hexagon socket set screw	Alloy steel		19	End plate	Alloy steel	Alumite
8	Cushion rubber (R)	Polyurethane rubber		20	Hexagon bolt	Alloy steel	Zinc chromate
9	Piston	Aluminum alloy		21	Rod cover seal ring	Nitrile rubber	
10	Piston seal	Nitrile rubber		22	Table	Aluminum alloy	Alumite
11	Magnet	Plastic		23	Cylinder body	Aluminum alloy	Hard alumite
12	Flat washer	Stainless steel		24	Gasket	Alloy steel	
13	Hexagon nut	Stainless steel		25	Hexagon socket set screw	Alloy steel	Zinc chromate

Consumable parts list

Bore size (mm)	Kit No.	Consumable part No.
φ6	LCV-6K	❸ ❹ ❽ ❿ ⓰ ⓲ ㉑
φ8	LCV-8K	
φ12	LCV-12K	
φ16	LCV-16K	
φ20	LCV-20K	
φ25	LCV-25K	

*1: ❸ is only included in consumable parts for cylinders of φ6.

Internal structure and parts list

Structure with stopper

● Type with port on stopper side and bottom (code D)

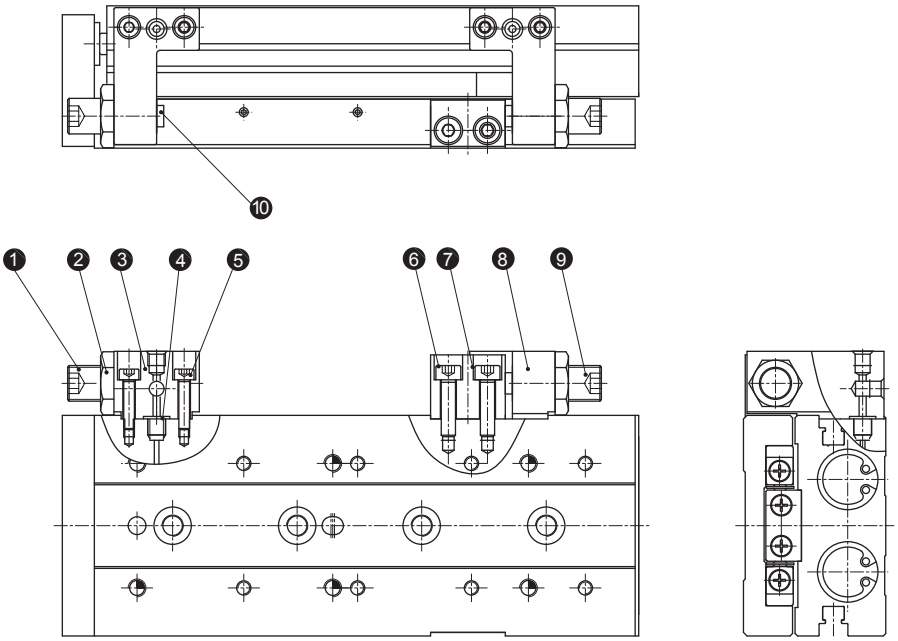

Parts list

No.	Part name	Material	Remarks
1	Stopper bolt	Alloy steel	Nickel plating
2	Hexagon nut	Alloy steel	Nickel plating
3	Stopper A	Aluminum alloy	Alumite
4	Seal washer	Polyurethane rubber	
5	Hexagon bolt	Zinc chromate	Nickel plating
6	Hexagon bolt	Zinc chromate	Nickel plating
7	Stopper block	Steel	Nickel plating
8	Stopper B	Polyurethane rubber	Alumite
9	Stopper bolt	Aluminum alloy	Nickel plating
10	Cushion rubber	Polyurethane rubber	

● Type without stopper port

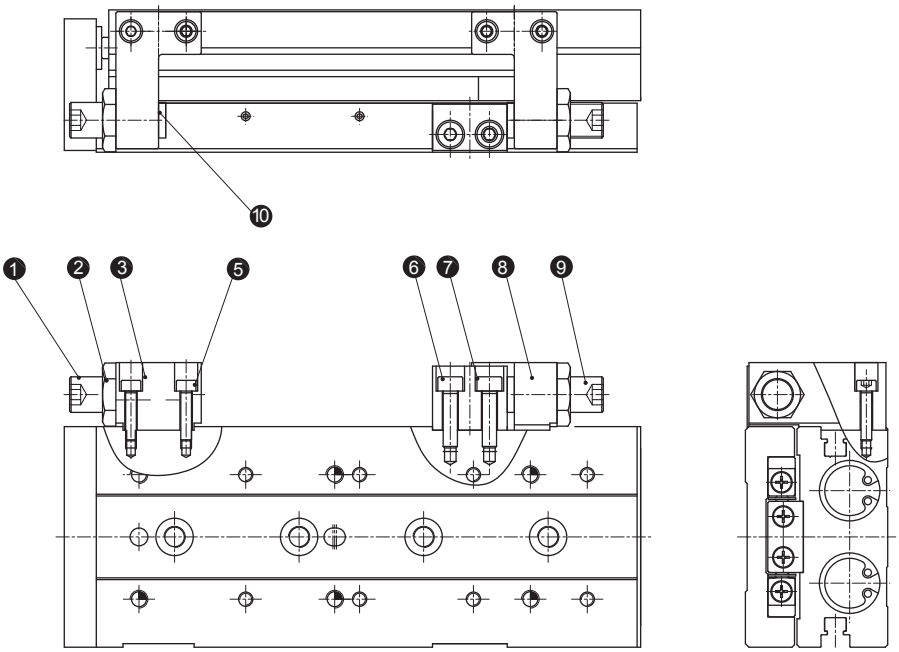

Parts list

No.	Part name	Material	Remarks
1	Stopper bolt	Alloy steel	Nickel plating
2	Hexagon nut	Alloy steel	Nickel plating
3	Stopper A	Aluminum alloy	Alumite
4	–	–	
5	Hexagon bolt	Zinc chromate	Nickel plating
6	Hexagon bolt	Zinc chromate	Nickel plating
7	Stopper block	Steel	Nickel plating
8	Stopper B	Polyurethane rubber	Alumite
9	Stopper bolt	Aluminum alloy	Nickel plating
10	Cushion rubber	Polyurethane rubber	

Dimensions (bore size: φ6)

● LCV-6

Stroke length: 10, 20, 30, 40, 50

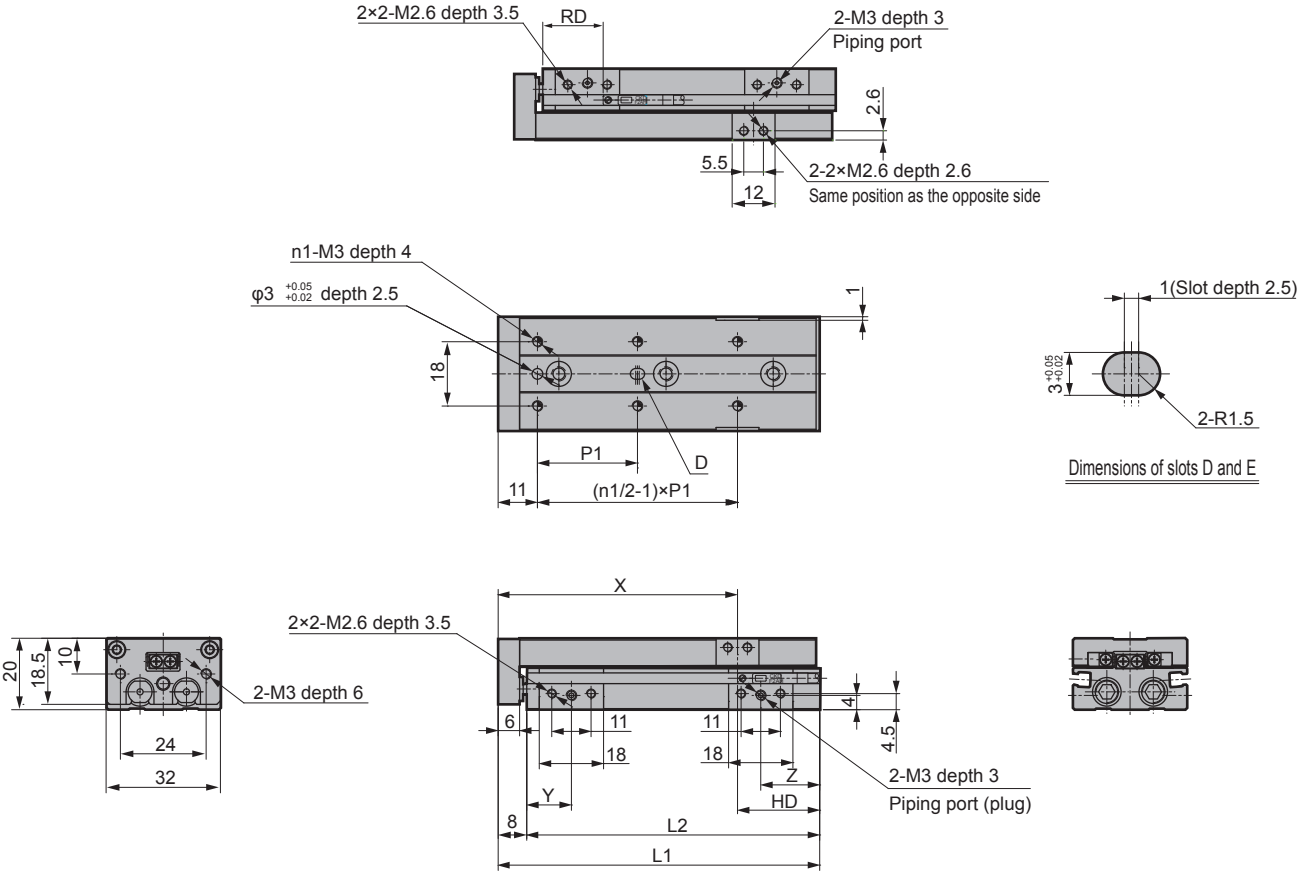

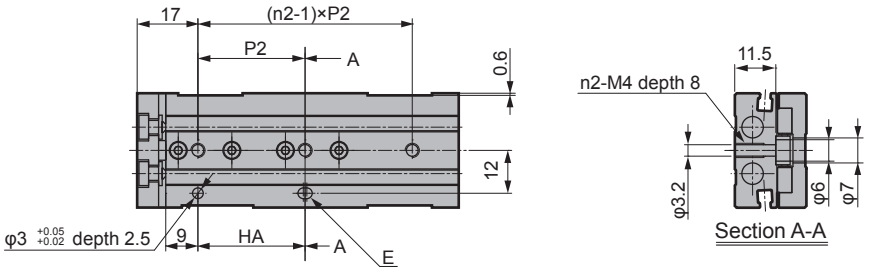

Dimensions table for each stroke length

Stroke	10	20	30	40	50
L1	57.5	67.5	77.5	90	106
L2	49.5	59.5	69.5	82	98
X	39	49	59	67	77
Y	14.5	14.5	14.5	12.5	12.5
Z	12	12	12	16.5	22.5
n1	4	4	6	6	6
P1	20	30	20	28	38
n2	2	2	3	3	4
P2	25	35	20	30	24
HA	20	20	20	30	48

● Dimensions of projecting section for cylinder switch F2S and F3S

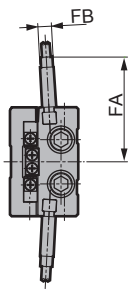

Stroke	10	20	30	40	50
FA	30.8				
FB	4				
RD	16.4				
HD	23.1			25.6	31.6

*1: When using a positioning hole, use a pin with dimensions that do not require press fitting. The recommended tolerance of a pin is JIS tolerance M6 or less.

Dimensions (bore size: φ8)

● LCV-8

Stroke length: 10, 20, 30, 40, 50, 75

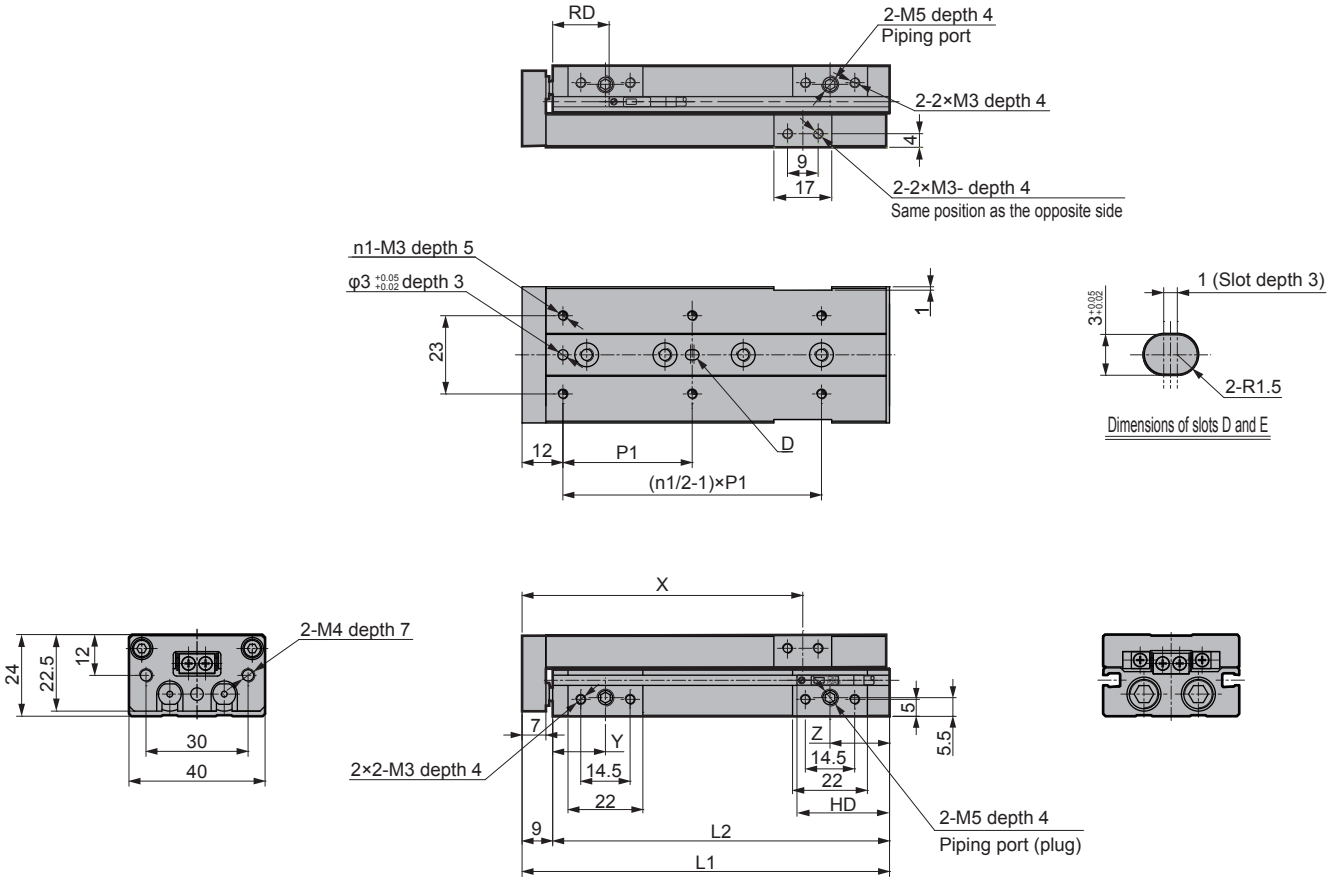

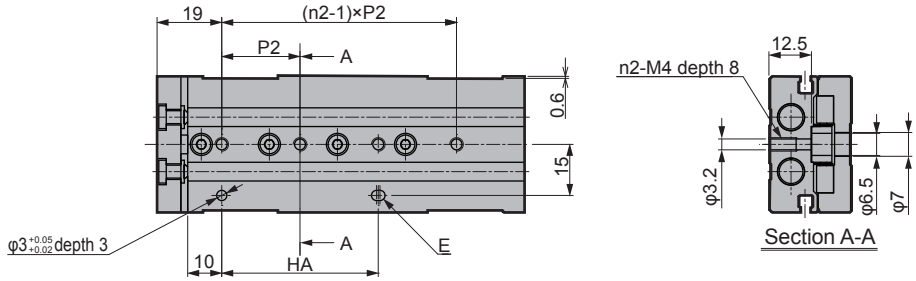

Dimensions table for each stroke length

Stroke	10	20	30	40	50	75
L1	63.5	73.5	83.5	93.5	108	158
L2	54.5	64.5	74.5	84.5	99	149
X	41.5	51.5	61.5	71.5	82.5	107.5
Y	14.5	14.5	14.5	14.5	15.5	15.5
Z	14	14	14	14	17.5	42.5
n1	4	4	4	4	6	6
P1	25	25	40	50	38	50
n2	2	2	3	3	4	5
P2	28	30	20	28	23	28
HA	20	30	20	28	46	56

● Dimensions of projecting section for cylinder switch F2S and F3S

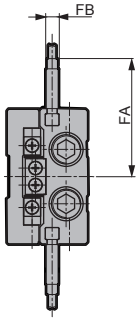

Stroke	10	20	30	40	50	75
FA	34.7					
FB	4					
RD	17					
HD	27.5				32	57

*1: When using a positioning hole, use a pin with dimensions that do not require press fitting. The recommended tolerance of a pin is JIS tolerance M6 or less.

*2: When using rear piping, refer to the cautions 1. Common: when piping on page 25.

Dimensions (bore size: φ12)

● LCV-12

Stroke length: 10, 20, 30, 40, 50, 75, 100

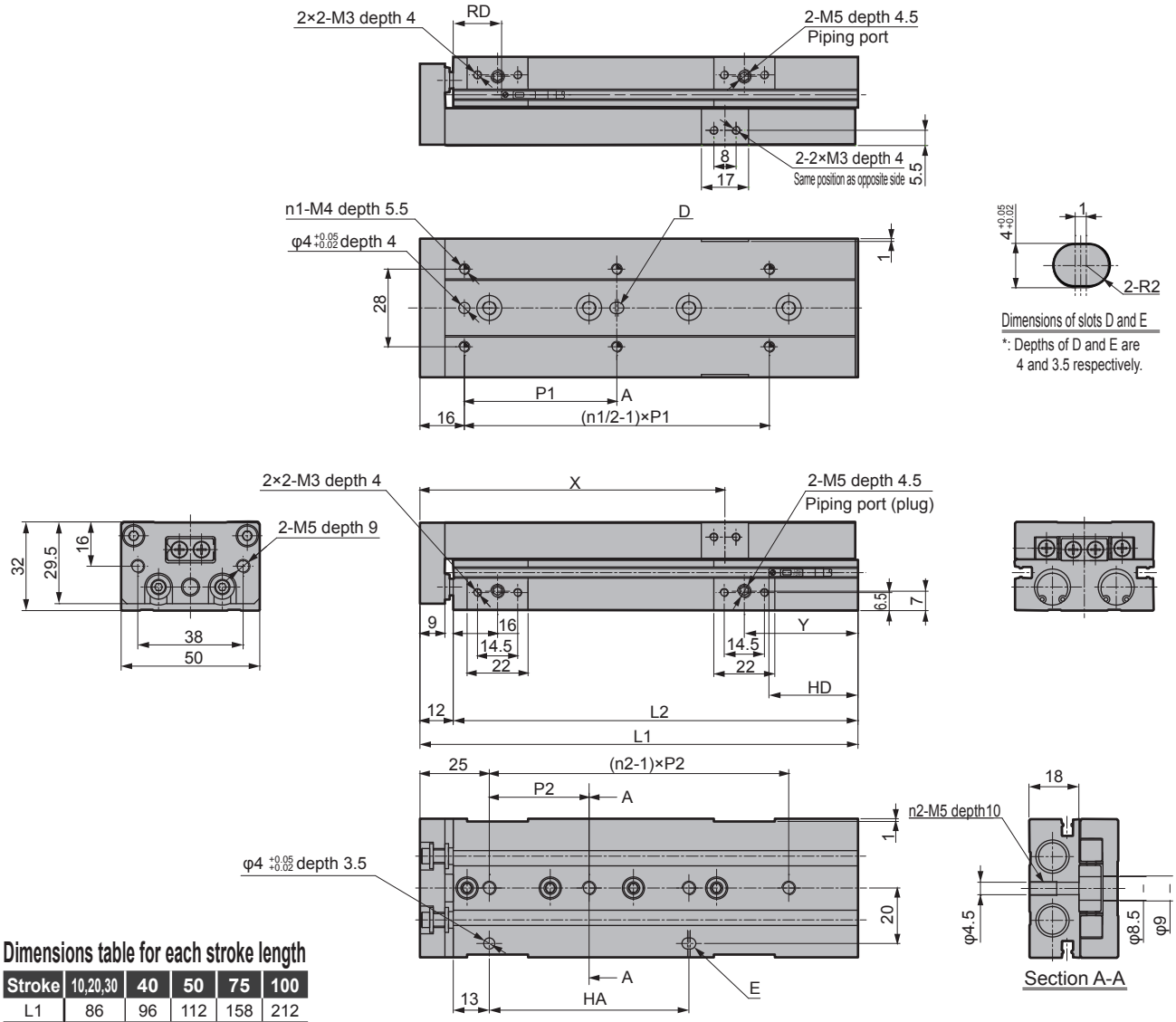

Dimensions table for each stroke length

Stroke	10,20,30	40	50	75	100
L1	86	96	112	158	212
L2	74	84	100	146	200
X	65	75	85	110	135
Y	14	14	20	41	70
n1	4	4	6	6	6
P1	35	50	35	55	65
n2	2	3	3	4	5
P2	40	25	36	36	38
HA	40	25	36	72	76

● Dimensions of projecting section for cylinder switch F2S and F3S

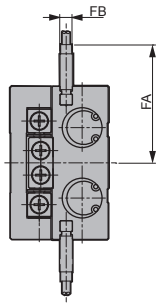

Stroke	10	20	30	40	50	75	100
FA	38.6						
FB	4						
RD	19.5						
HD	44.5	34.5	24.5	24.5	30.5	51.5	80.5

*1: When using a positioning hole, use a pin with dimensions that do not require press fitting. The recommended tolerance of a pin is JIS tolerance M6 or less.

*2: When using rear piping, refer to the cautions 1. Common: when piping on page 25.

Dimensions (bore size: φ16)

● LCV-16

Stroke length: 10, 20, 30, 40, 50, 75, 100, 125

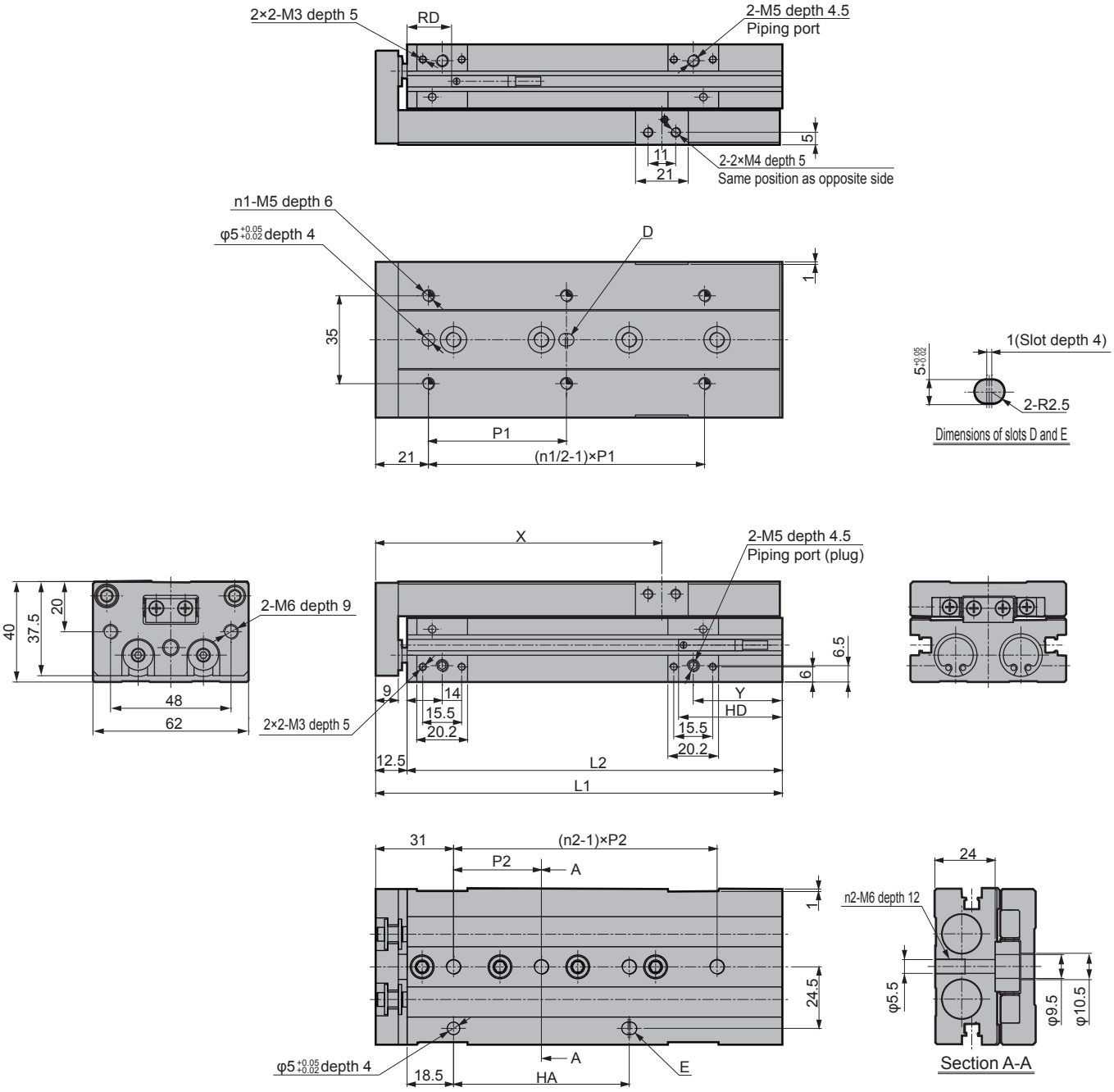

Dimensions table for each stroke length

Stroke		10	20	30	40	50	75	100	125
L1		95			105	115	162	210	260
L2		82.5			92.5	102.5	149.5	197.5	247.5
X		69			79	89	114	139	164
Y		13.5			13.5	13.5	35.5	58.5	83.5
n1		4			4	6	6	6	8
P1		35			40	30	55	65	70
n2		2			2	3	4	5	7
P2		40			50	30	35	35	35
HA		40			50	30	70	70	70
T0/5 * T2/3 *	RD	17							
	HD	55.5	45.5	35.5			57.5	80.5	105.5
T2/3W *	RD	19.5							
	HD	53	43	33			55	78	103

*1: When using a positioning hole, use a pin with dimensions that do not require press fitting. The recommended tolerance of a pin is JIS tolerance M6 or less.

*2: When using rear piping, refer to the cautions 1. Common: when piping on page 25.

Dimensions (bore size: φ20)

● LCV-20

Stroke length: 10, 20, 30, 40, 50, 75, 100, 125, 150

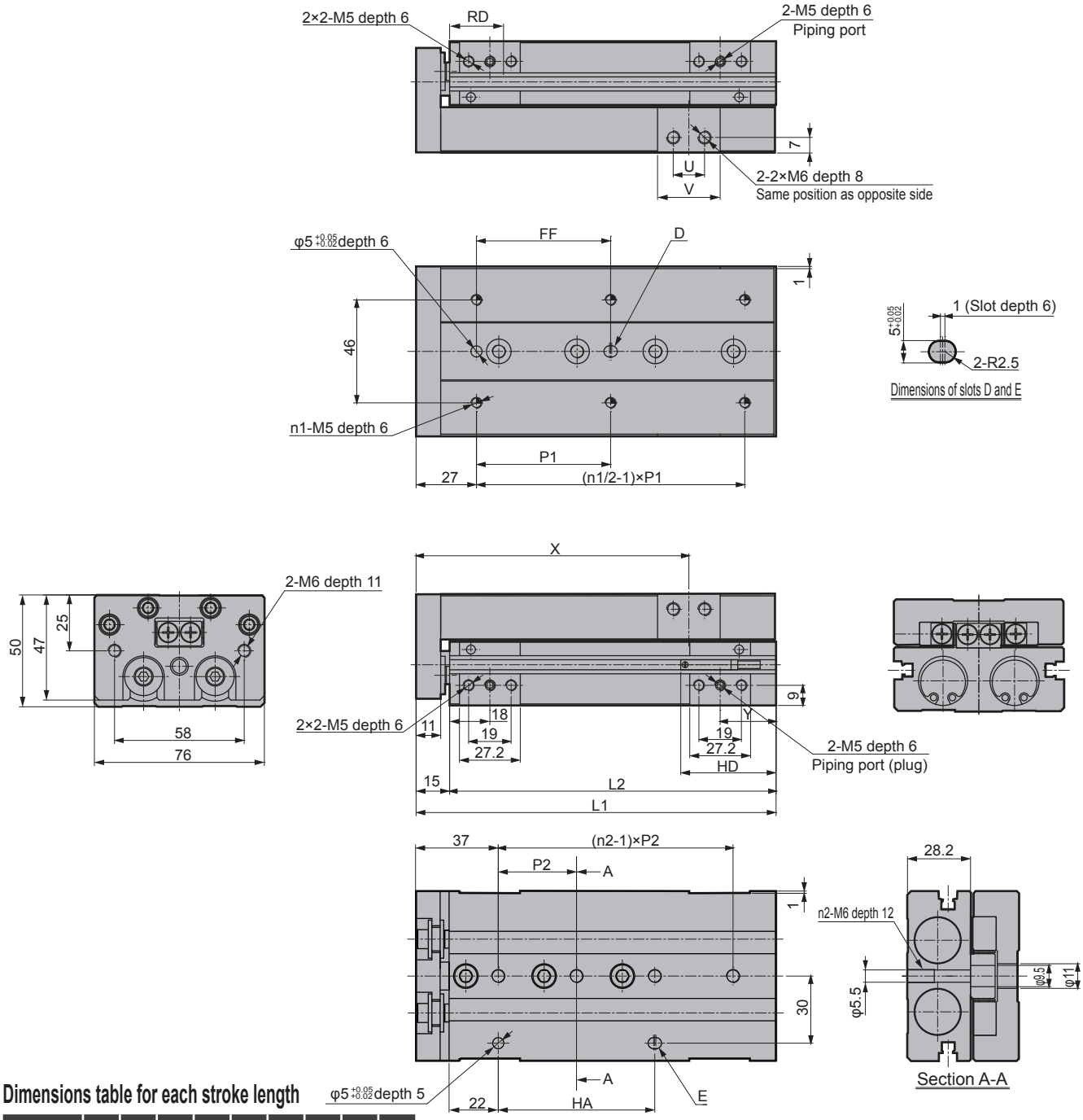

Dimensions table for each stroke length

Stroke		10	20	30	40	50	75	100	125	150
L1		109			119	129	161	214	268	320
L2		94			104	114	146	199	253	305
U		14			14	14	14	21	21	21
V		28			28	28	28	35	35	35
X		77			87	97	122	150.5	175.5	200.5
Y		18			18	18	25	46	75	102
n1		4			4	6	6	6	8	8
P1		50			60	35	60	70	70	80
n2		2			2	3	4	5	6	7
P2		45			55	35	35	35	38	44
HA		35			35	35	70	70	76	88
FF		40			50	35	60	70	70	80
T0/5 *	RD	19								
T2/3 *	HD	65	55	45			52	80	109	136
T2/3W *	RD	20.5								
	HD	63.5	53.5	43.5			50.5	78.5	107.5	134.5

*1: When using a positioning hole, use a pin with dimensions that do not require press fitting. The recommended tolerance of a pin is JIS tolerance M6 or less.

*2: When using rear piping, refer to the cautions 1. Common: when piping on page25.

Dimensions (bore size: φ25)

● LCV-25

Stroke length: 10, 20, 30, 40, 50, 75, 100, 125, 150

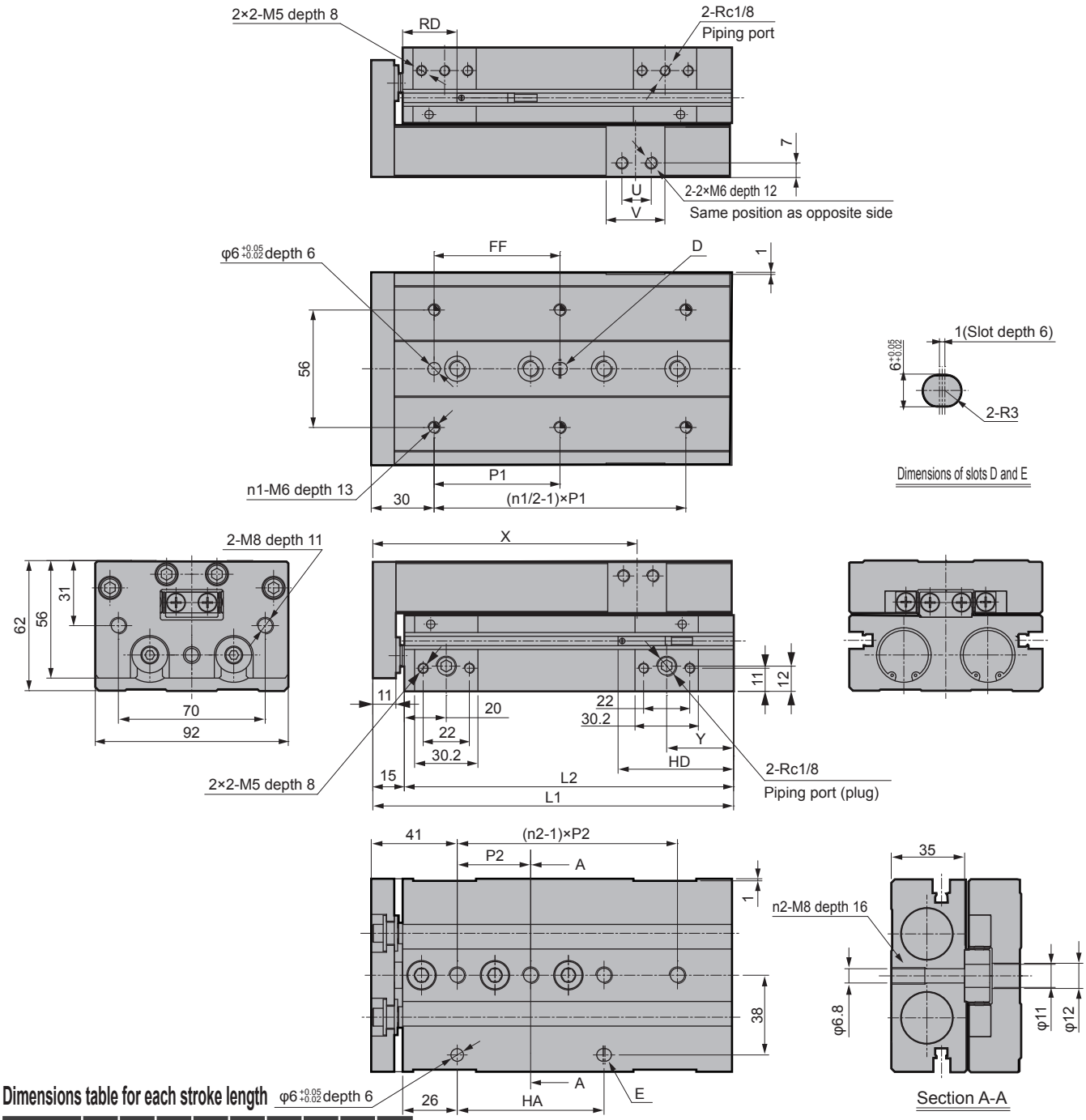

Dimensions table for each stroke length

Stroke		10	20	30	40	50	75	100	125	150
L1		119			129	139	172	213	271	311
L2		104			114	124	157	198	256	296
U		14			14	14	14	21	21	21
V		28			28	28	28	35	35	35
X		81			91	101	126	154.5	179.5	204.5
Y		22			22	21	30	39	71	87
n1		4			4	6	6	6	8	8
P1		50			60	35	60	70	75	80
n2		2			2	3	4	5	6	7
P2		45			55	35	35	35	38	40
HA		45			55	35	70	70	76	80
FF		40			50	35	60	70	75	80
T0/5 *	RD	19								
T2/3 *	HD	75	65	55			63	79	112	127
T2/3W *	RD	21								
	HD	73	63	53			61	77	110	125

*1: When using a positioning hole, use a pin with dimensions that do not require press fitting. The recommended tolerance of a pin is JIS tolerance M6 or less.

*2: When using rear piping, refer to the cautions 1. Common: when piping on page 25.

Dimensions: Option

● Rubber cushion metal stopper (S1 to S6)
● Rubber cushion stopper (D1 to D6)

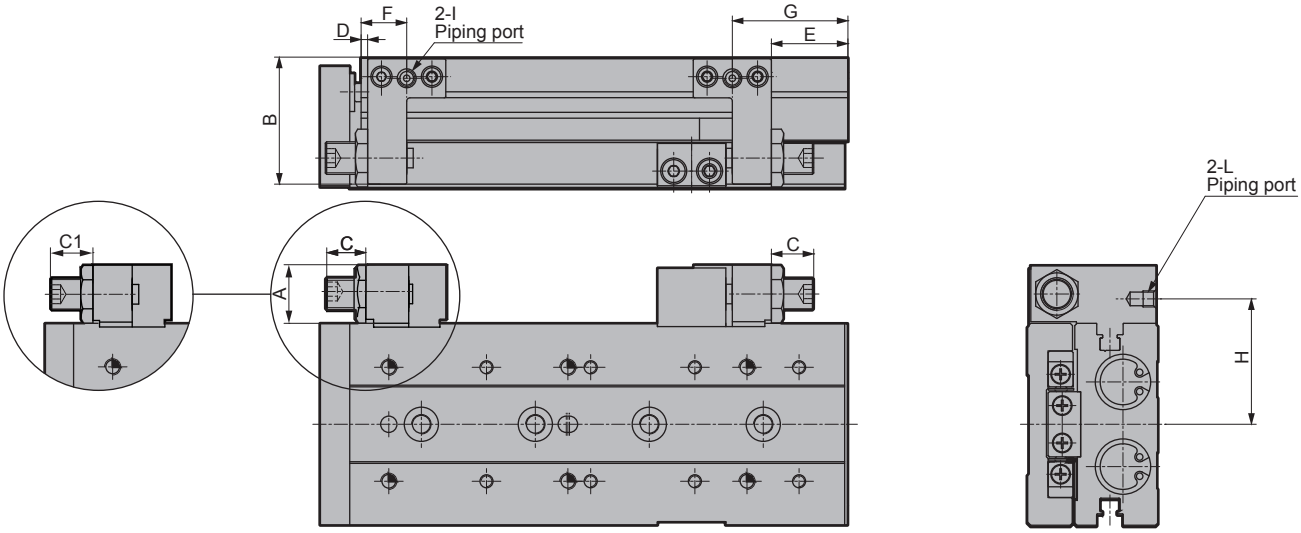

● Shock absorber stopper (A1 to A6)

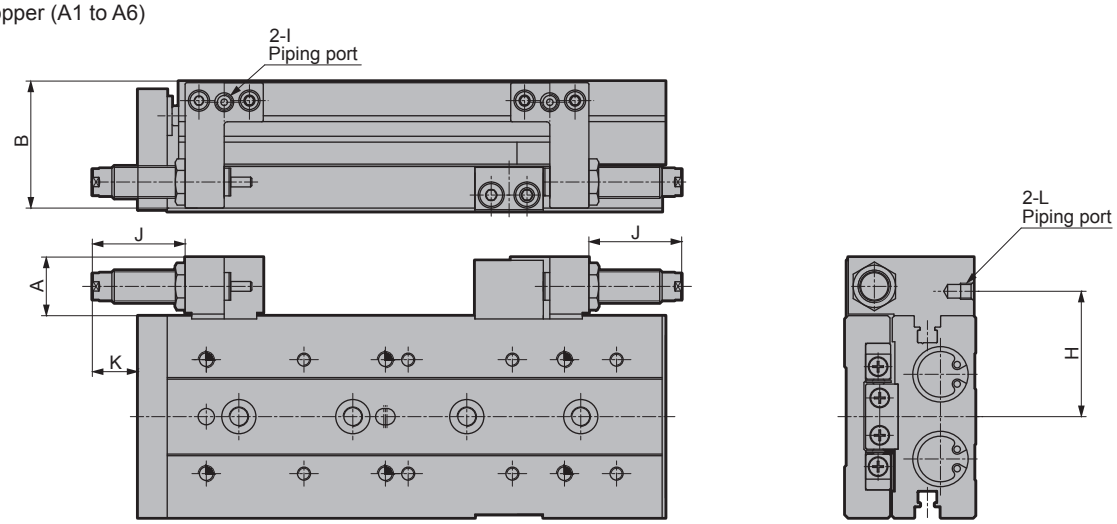

*1: F, H and L dimensions are only for the types with port on the stopper (S*D* and A*D*).
*2: The adjustable stroke range of the rubber cushion metal stopper is 5 mm on one side.
*3: Dimension C is for rubber cushion metal stopper (S1 to S6); Dimension C1 is for rubber cushion stopper (D1 to D6).

Symbol / Bore size (mm)	Stroke length	A	B	C	C1	D	E	F	G	H	I	J	K	L	Shk abs stopper Adjustable range (one side)
φ6	10,20,30	14	19.5	11.5	9.5	5.5	3	14.5	12	23.6	M3 depth 2.5	21	7.5	M3 depth 2.5	9
	40					3.5	7.5	12.5	16.5				9.5		
	50					3.5	13.5	12.5	22.5						
φ8	10,20,30,40	15.6	23.5	10.5	8.5	3.5	3.5	14.5	14	25.9	M5 depth 4	29	16.5	M3 depth 3.5	20.5
	50					4.5	6.5	15.5	17.5				15.5		
	75					4.5	31.5	15.5	42.5						
φ12	10,20,30,40	15.5	30	12.5	10.5	5	3	16	14	30	M5 depth 4	30	14	M5 depth 4	19
	50						9		20						
	75						30		41						
	100						59		70						
φ16	10,20,30,40,50	18	39	11	11.5	2	1.5	14	13.5	38.5	M5 depth 4	28.5	14	M5 depth 4	15
	75						23.5		35.5						
	100						46.5		58.5						
	125						71.5		83.5						
φ20	10,20,30,40,50	20.5	48	15.5	13	2.5	2.5	18	18	47	M5 depth 4	32	14.5	M5 depth 4	17.5
	75						9.5		25						
	100						30.5		46						
	125						59.5		75						
	150						86.5		102						
φ25	10,20,30,40	20.5	57	15.5	13	3	5	20	22	56	Rc1/8	28.5	10.5	M5 depth 4	12
	50						4		21						
	75						13		30						
	100						22		39						
	125						54		71						
	150						70		87						

STEP 1

❶ Calculate the load and the moment of impact occurring at the stroke end in each direction.

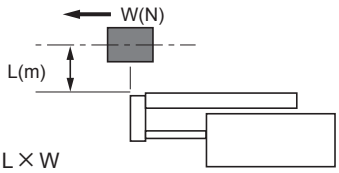

M1' = L × W

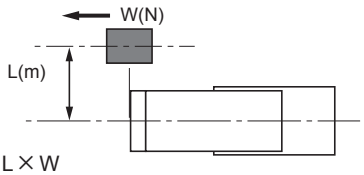

M3' = L × W

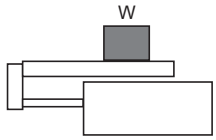

W' = W

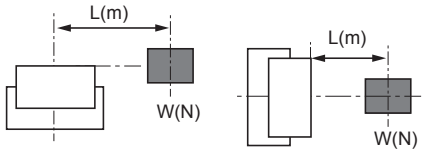

M2' = L × W

Obtain an approximate G coefficient in [Table 1].

[Table 1] Va (average speed) = $\frac{\text{Travel distance}}{\text{Travel time (m/s)}}$

Va average speed(m/s)	Vm stroke end speed (m/s)	G coefficient
~0.07	~0.1	5
~0.2	~0.3	14
~0.27	~0.4	19
~0.35	~0.5	24

G coefficient= ☐

M1' × G = ☐ (N·m)

M2' = ☐ (N·m)

M3' × G = ☐ (N·m)

W' = ☐ (N)

$E' = \frac{1}{2} \times (m + m_\alpha) \times Vm^2$

= ☐ (J)

$(m \approx \frac{W}{9.8})$

❷ Select a temporary bore size that satisfies the following formula.

$$M'_T = \frac{M1' \times G}{M1'max} + \frac{M2'}{M2'max} + \frac{M3' \times G}{M3'max} + \frac{W'}{W'max} < 1$$

$E' < E\ max$

M'_T	: Resultant moment (must be smaller than 1)
G	: G coefficient
W'max	: Max. allowable value of W' (from Table 2)
M1'max	: Max. allowable value of M1' (from Table 2)
M2'max	: Max. allowable value of M2' (from Table 2)
M3'max	: Max. allowable value of M3' (from Table 2)
E max	: Max. allowable value of Eo (from Table 3)
m_α	: Table weight (from Table 4)

[Table 2] Allowable static load

Bore size	Stroke length (mm)	Vertical load W'max(N)	Bending moment M1'max(N•m)	Radial moment M2'max(N•m)	Torsion moment M3'max(N•m)
φ6	10 to 30	88.7	1.3	2.7	1.3
	40 to 50	119.6	6.9	3.6	6.9
φ8	10 to 30	108.0	1.3	2.7	1.3
	40 to 75	119.6	6.9	3.6	6.9
φ12	10 to 50	212.9	5.5	9.3	5.5
	75 to 100		17.0		17.0
φ16	10 to 50	308.6	14.7	18.5	14.7
	75 to 125		35.5		35.5
φ20	10 to 50	529.2	26.2	36.3	26.2
	75 to 150		54.0		54.0
φ25	10 to 50	684.2	58.6	101.1	58.6
	75 to 150		127.5		127.5

*: When attaching a load to the end plate, even if selecting long stroke length (φ6, 8: 40 or more, φ12 or more: 75 or more), calculate the allowable values with short stroke length (φ6, 8: 30 or less, φ12 or more: 50 or less).

[Table 3] LCV allowable absorbed energy (Eo)

Bore size	Standard (J)	With rubber cushion metal (J)	With rubber cushion (J)	With cushion (J)
φ6	0.025	0.0032	0.027	0.14
φ8	0.058	0.0032	0.027	0.25
φ12	0.112	0.014	0.055	0.25
φ16	0.176	0.043	0.11	0.65
φ20	0.314	0.055	0.16	1.3
φ25	0.314	0.14	0.24	1.3

[Table 4] Table weight (Unit: kg)

Bore size	Stroke length(mm)								
	10	20	30	40	50	75	100	125	150
φ6	0.045	0.051	0.057	0.068	0.079	—	—	—	—
φ8	0.073	0.079	0.090	0.106	0.122	0.176	—	—	—
φ12	0.154	0.154	0.154	0.173	0.199	0.276	0.375	—	—
φ16	0.226	0.226	0.226	0.252	0.272	0.383	0.490	0.590	—
φ20	0.495	0.495	0.495	0.551	0.591	0.742	0.972	1.172	1.429
φ25	0.754	0.754	0.754	0.821	0.883	1.098	1.348	1.660	1.930

STEP 2

Next, obtain a more accurate load factor, effective thrust, stroke end speed and resultant moment.

● Calculate the load factor.

$$\alpha = \frac{Fo}{F} \times 100\,[\%]$$

α : Load factor

Fo : Force (N) required to move the workpiece

F : Cylinder theoretical thrust (N)
[Table 5]

For horizontal operation	For vertical operation
Fo = Fw	Fo = W + Fw
FW : W × 0.2 Note(N)	
W : Load(N)	

Note: Coefficient of friction

[Table 5] Theoretical thrust table (Unit: N)

Bore size (mm)	Actuation direction	Working pressure MPa						
		0.15	0.2	0.3	0.4	0.5	0.6	0.7
φ6	Extension	8	11	17	23	28	34	40
	Retraction	6	8	13	17	21	25	30
φ8	Extension	15	20	30	40	50	60	70
	Retraction	11	15	23	30	38	45	53
φ12	Extension	34	45	68	90	113	136	158
	Retraction	25	34	51	68	85	102	119
φ16	Extension	60	80	121	161	201	241	281
	Retraction	52	69	104	138	173	207	242
φ20	Extension	94	126	188	251	314	377	440
	Retraction	79	106	158	211	264	317	369
φ25	Extension	147	196	295	393	491	589	687
	Retraction	124	165	247	330	412	495	577

[Table 6] Load factor guidelines

Working pressure MPa	Load factor(%)
0.2 to 0.3	$\alpha \leq 40$
0.3 to 0.6	$\alpha \leq 50$
0.6 to 0.7	$\alpha \leq 60$

STEP 3

Obtain the stroke end speed (Vm) and G coefficient from the average speed (Va) and load factor obtained in STEP 2.

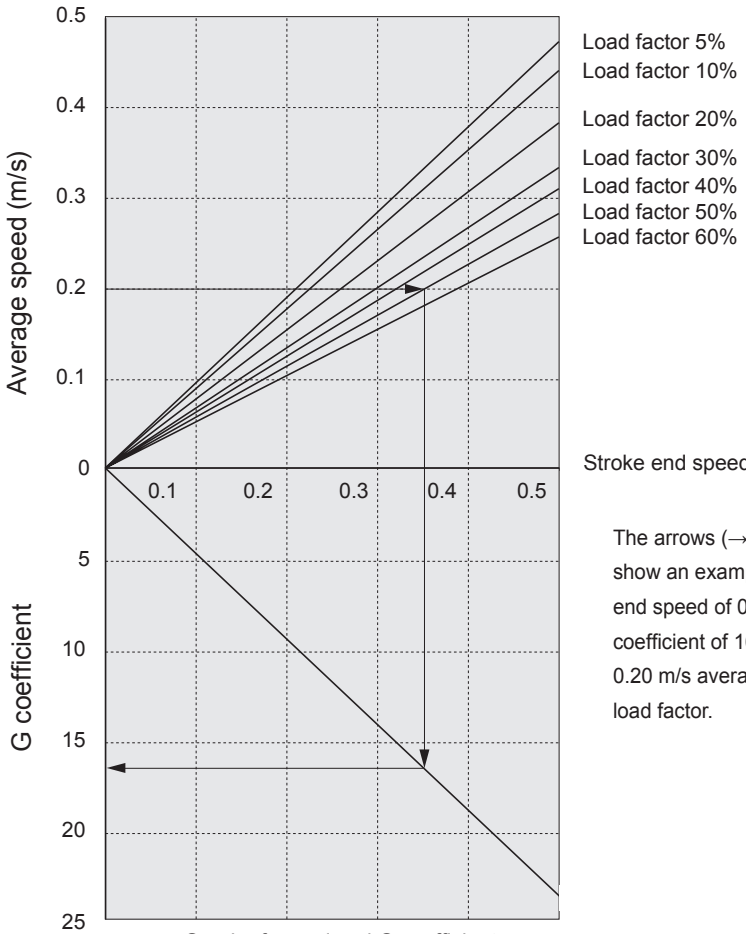

Graph of speed and G coefficient
G coefficient= ☐

The arrows (→) in the figure show an example in which stroke end speed of 0.35 m/s and G coefficient of 16.8 are obtained at 0.20 m/s average speed and 50% load factor.

STEP 4

Calculate the resultant moment (MT) from the G coefficient and stroke end speed (Vm) obtained in STEP 3.

M1'× G = ☐ (N·m)

M2' = ☐ (N·m)

M3'× G = ☐ (N·m)

W' = ☐ (N)

$$M'_T = \frac{M1' \times G}{M1'max} + \frac{M2'}{M2'max} + \frac{M3' \times G}{M3'max} + \frac{W'}{W'max} = \square$$

Obtain MT (resultant moment during movement). (Note that it differs from that obtained in STEP 1.)

● Vertical load: W(N)

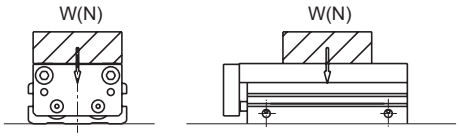

● Bending moment: M1(N·m)

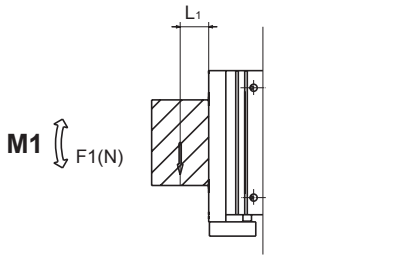

$M1=F1 \times L_1$

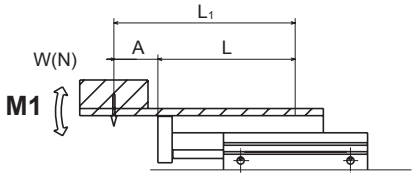

$M1=W \times L_1$

$L_1=A+L$

L is value in table below

● Radial moment: M2(N·m)

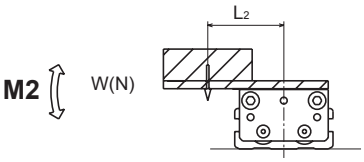

$M2=W \times L_2$

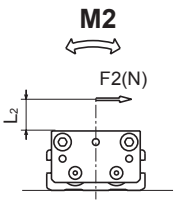

$M2=F2 \times L_2$

● Torsion moment: M3(N·m)

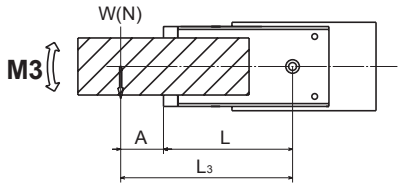

$M3=W \times L_3$

$L_3=A+L$

L is value in table below

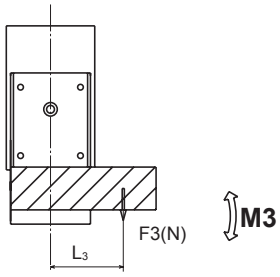

$M3=F3 \times L_3$

L value

Unit (m)

Bore size	Stroke length								
	10	20	30	40	50	75	100	125	150
φ6	0.035	0.042	0.050	0.066	0.079	—	—	—	—
φ8	0.031	0.039	0.052	0.069	0.080	0.116	—	—	—
φ12	0.034	0.044	0.054	0.066	0.084	0.117	0.157	—	—
φ16	0.036	0.046	0.056	0.066	0.080	0.118	0.157	0.194	—
φ20	0.042	0.052	0.062	0.073	0.084	0.119	0.154	0.186	0.232
φ25	0.044	0.054	0.064	0.075	0.088	0.123	0.156	0.188	0.228

STEP 4

M1=M1 = ☐(N·m)

M2=M2 = ☐(N·m)

M3=M3 = ☐(N·m)

W=W = ☐(N)

$$M_T = \frac{M1}{M1max} + \frac{M2}{M2max} + \frac{M3}{M3max} + \frac{W}{Wmax} = \square$$

M_T : Synthesis of moment

Wmax : Max. allowable value of W (from Table 7)

M1max : Max. allowable value of M1 (from Table 7)

M2max : Max. allowable value of M2 (from Table 7)

M3max : Max. allowable value of M3 (from Table 7)

E max : Max. allowable value of Eo (from Table 3)

[Table 7] Allowable travelling load

Bore size	Stroke length (mm)	Vertical load Wmax(N)	Bending moment M1max(N • m)	Radial moment M2max(N • m)	Torsion moment M3max(N • m)
φ6	10 to 30	11.5	0.17	0.35	0.17
	40 to 50	15.5	0.89	0.47	0.89
φ8	10 to 30	14	0.17	0.35	0.17
	40 to 75	15.5	0.89	0.47	0.89
φ12	10 to 50	27.6	0.71	1.2	0.71
	75 to 100		2.2		2.2
φ16	10 to 50	40	1.9	2.4	1.9
	75 to 125		4.6		4.6
φ20	10 to 50	68.6	3.4	4.7	3.4
	75 to 150		7		7
φ25	10 to 50	88.7	7.6	13.1	7.6
	75 to 150		17		17

*: When attaching a load to the end plate, even if selecting long stroke length (φ6, 8: 40 or more, φ12 or more: 75 or more), calculate the allowable values with short stroke length (φ6, 8: 30 or less, φ12 or more: 50 or less).

Confirm M_T, $M'_T \leq 1$.

↓

Determine the bore size

↓

φA

STEP 5

Allowable absorbed energy confirmation

$$E = \frac{1}{2} \times (m + m_\alpha) \times Vm^2$$

E : Kinetic energy at workpiece end (J)

m : Load weight (kg)($m \approx \frac{W(N)}{9.8}$)

m_α : Table weight (from Table 4)

Vm : Stroke end speed (m/s)

E max : Max. allowable value of Eo (from Table 3)

Confirm E ≤ E max.

↓

Determine the bore size

↓

φB

STEP 6

Bore size decided in STEP 4 (load conditions)

φA

Bore size decided in STEP 5 (allowable)

φB

φA≤φB → φB is selected.

or → φA available when used in combination with external shock absorber or when it comes with cushion stopper.

φA>φB → φA is selected.

Selection confirmation graph of shock absorber stopper

1. This is a simplified confirmation graph for shock absorber stoppers. The area inside the graph is the usable range. Select a bore size for shock absorber mounting within the usable range.
2. Simplified selection graph lists the pneumatic pressure value used for the cylinder at 0.5 MPa.
3. The absorbed energy of the shock absorber varies depending on the temperature. The simplified confirmation graph lists the value at room temperature.
4. The colliding object weight is the sum of the load weight m and the table weight ma.

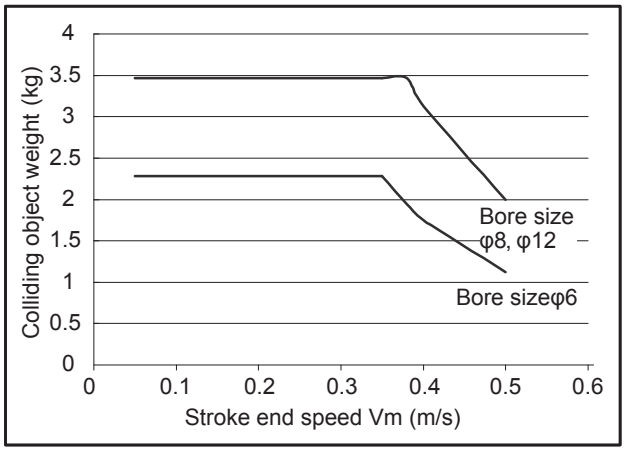

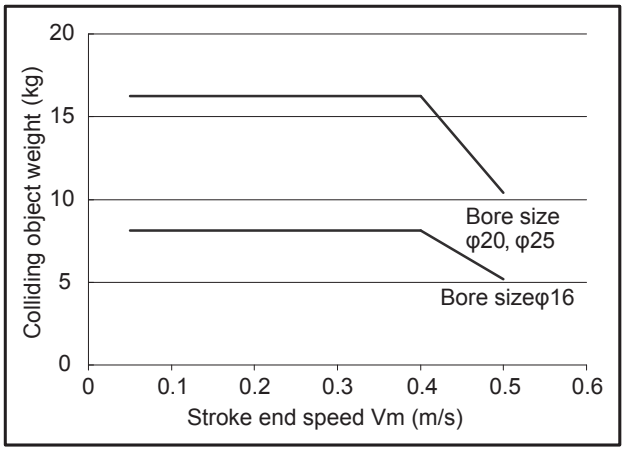

Displacement of A

[Displacement of table due to M1 moment]

Displacement at the table end when load (F1) is applied to the table end.

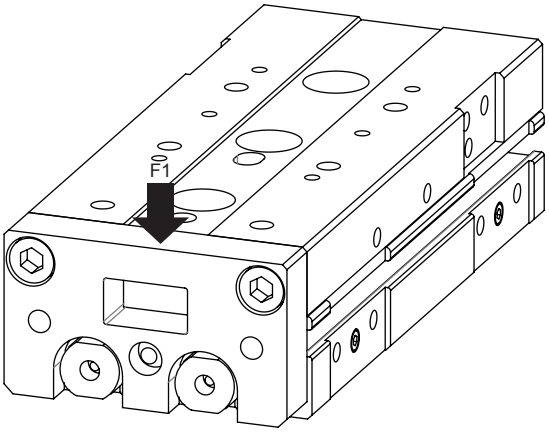

LCV-6

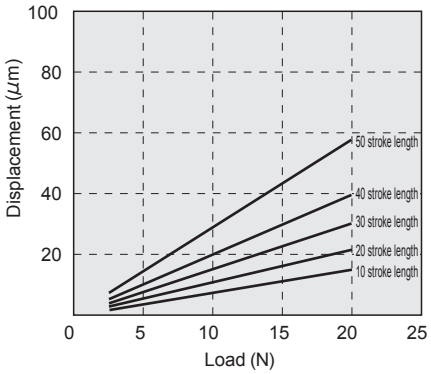

LCV-8

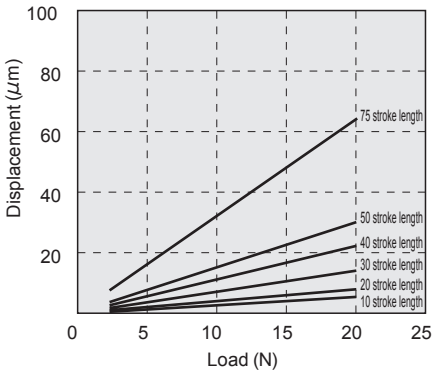

LCV-12

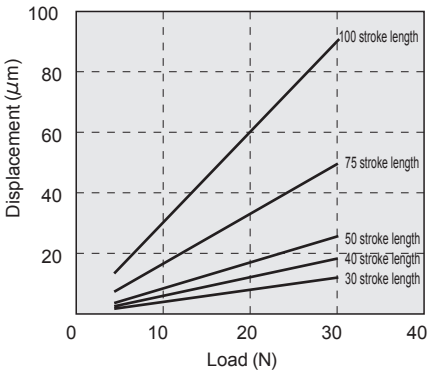

LCV-16

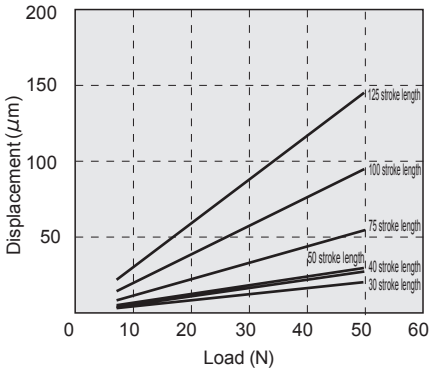

LCV-20

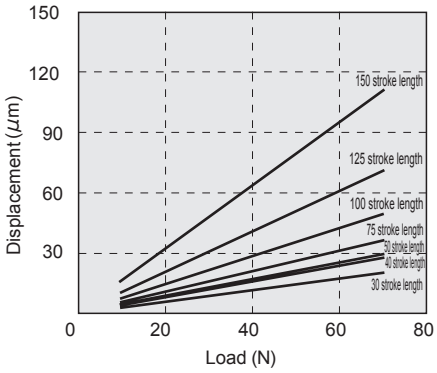

LCV-25

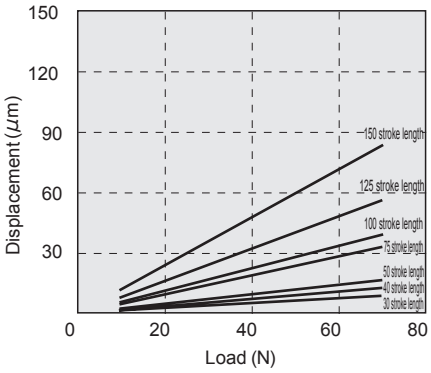

Displacement of A

[Displacement of table due to M2 moment]

Displacement at the table end (A part) when load (F2) is applied to a point L mm away from the center of the cylinder.

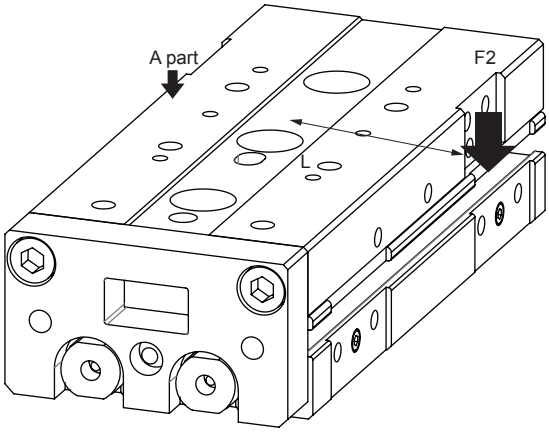

L value
φ 6: L= 70, φ 8: L= 70
φ12: L= 90, φ16: L=100
φ20: L=100, φ25: L=200

LCV-6

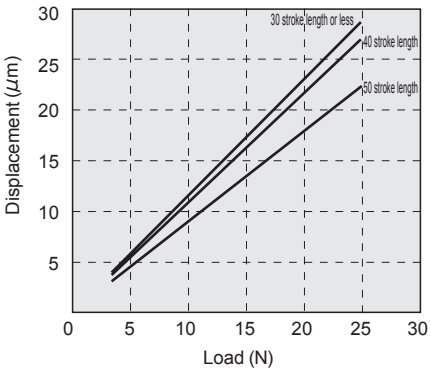

LCV-8

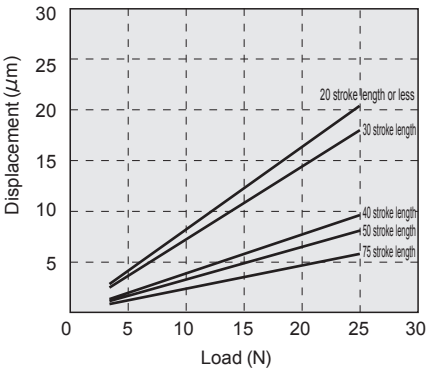

LCV-12

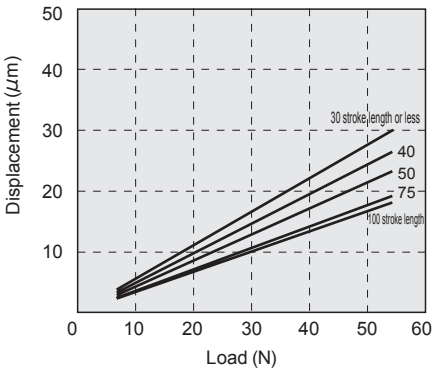

LCV-16

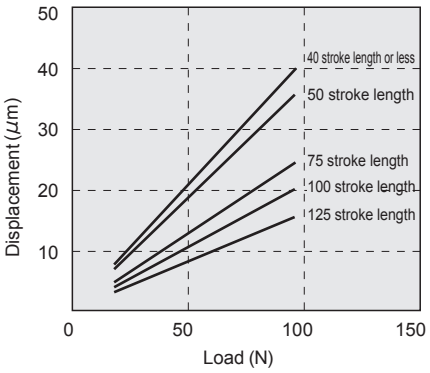

LCV-20

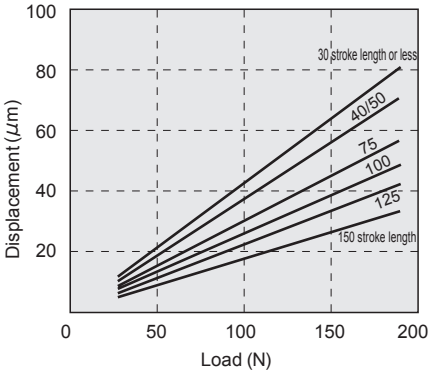

LCV-25

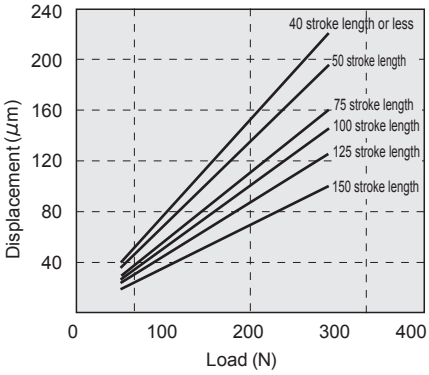

Displacement of A

[Displacement of table due to M3 moment]

Displacement angle of the table when rotation moment (M3) is applied to the cylinder.

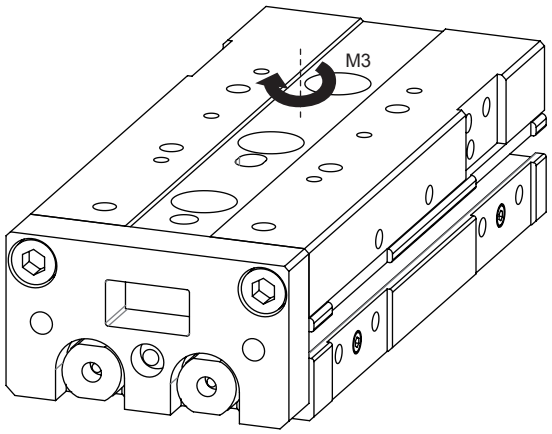

LCV-6(M3)

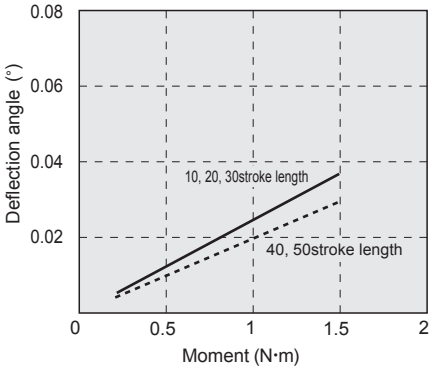

LCV-8(M3)

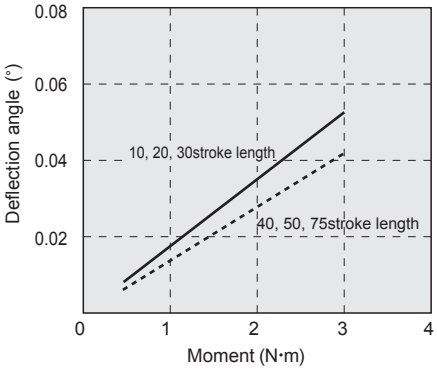

LCV-12(M3)

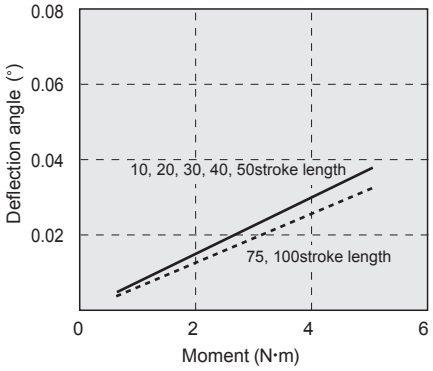

LCV-16(M3)

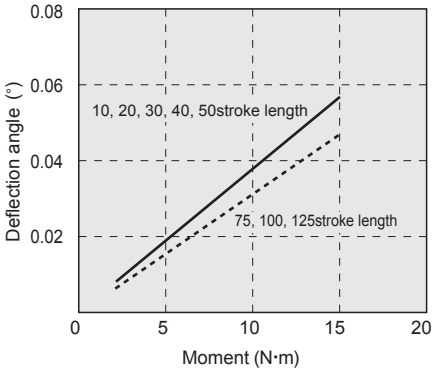

LCV-20(M3)

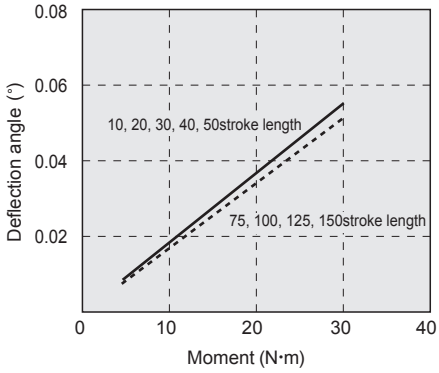

LCV-25(M3)

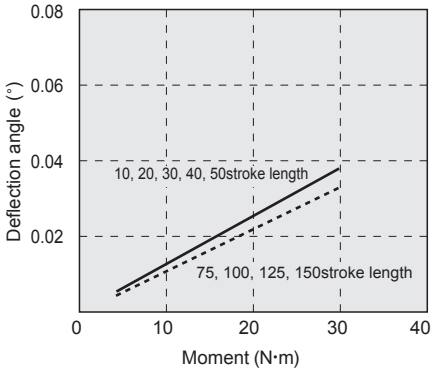

Safety Precautions

Be sure to read this section before use.

When designing and manufacturing equipment using CKD products, the manufacturer is obligated to ensure that the safety of the mechanism, pneumatic control circuit and/or water control circuit and the system that runs the electrical controls are secured.
It is important to select, use, handle, and maintain CKD products appropriately to ensure their safe usage.
Observe warnings and precautions, etc. to ensure device safety.
Check that device safety is ensured, and manufacture a safe device.

WARNING

1 This product is designed and manufactured as a general industrial machine part. Therefore, it must be handled by an operator with sufficient knowledge and experience.

2 Use the product within the specifications range.

This product must be used within its stated specifications. In addition, never modify or additionally machine this product.
This product is intended for use in general industrial machinery equipment or parts. It is not intended for use outdoors or for use under the following conditions or environments.
(Note that this product can be used when CKD is consulted prior to its usage and the customer consents to the CKD product specifications. The customer should provide safety measures to avoid danger in the event of problems.)

- Use for applications requiring safety, including nuclear energy, railways, aircraft, marine vessels, vehicles, medical devices, devices or applications in contact with beverages or foodstuffs, amusement devices, emergency cutoff circuits, press machines, brake circuits, or safety devices or applications.
- Use for applications where life or assets could be significantly affected, and special safety measures are required. Check that device safety is ensured, and manufacture a safe device.

3 Observe industrial standards and legal regulations, etc., pertaining to the safety of equipment design and management.

ISO4414, JIS B 8370 (General Rules for Pneumatic Systems)
JFPS2008 (Principles for pneumatic cylinder selection and use)
Including High Pressure Gas Safety Act, Industrial Safety and Health Act, other safety rules, body standards and regulations, etc.

4 Do not operate, pipe, or remove devices before confirming safety.

- Inspect and service the machine and devices after confirming the safety of all systems related to this product.
- Note that there may be hot or charged sections even after operation is stopped.
- When inspecting or servicing the device, turn OFF the energy source (gas supply or water supply), turn OFF power to the facility, and discharge any compressed air and fluid from the system to avoid gas leakage and leakage of electricity.
- When starting or restarting a machine or device that incorporates pneumatic components, make sure to secure system safety, such as pop-out prevention measures.

5 Observe the warnings and cautions on the following pages to prevent accidents.

■Precautions are ranked as "DANGER", "WARNING", and "CAUTION" in this section.

Danger: In the case where mishandled product operation may lead to fatalities or serious injuries, and the urgency of a dangerous situation is high.

Warning: A dangerous situation may occur if handling is mistaken, leading to fatal or serious injuries.

Caution: A dangerous situation may occur if handling is mistaken, leading to minor injuries or property damage.

Note that some items indicated with "CAUTION" may lead to serious results depending on the conditions. All items contain important information and must be observed.

Disclaimer regarding shipping

1 Warranty period

This warranty is valid for one (1) year after delivery to the customer's designated site.

2 Scope of warranty

In case any defect clearly attributable to CKD is found during the warranty period, CKD shall, at its own discretion, repair the defect or replace the relevant product in whole or in part and at no cost, according to its own judgment.
Note that the following failures are excluded from the warranty scope:

① When used outside of conditions/environment described in product specifications.
② Failures resulting from factors other than the delivered product.
③ When used not for the intended purposes.
④ Failures resulting from modification or repair not related to CKD.
⑤ Failures caused by matters that could not be predicted with the technologies in practice when the product was delivered.
⑥ Failures resulting from natural disasters for which CKD is not liable.

As well, the warranty described herein is limited to the delivered product itself, and does not cover damages incurred due to abnormality of the delivered product.

3 Compatibility check

The customer is responsible for confirming the compatibility of CKD products with the customer's systems, machines, and equipment.

Pneumatic components

Safety Precautions

Be sure to read this section before use.
For cylinder common items and cylinder switch, refer to Pneumatic Cylinders Catalog (CB-029SA).

Product-specific cautions: Linear slide cylinder LCV series

Design/selection

Common

CAUTION

■ **When selecting the cylinder, follow the "LCV Selection Guide" on pages 16 to 20.**

■ **Protect the cylinder with a cover to prevent damage and malfunction in locations where it is exposed to dripping water or oil, corrosive conditions or much dust.**

■ **Precautions for the type with switch**

- When using the T □ V switch with a rubber cushion metal stopper (S3**/S4**/S5**/S6**), rubber cushion stopper (D3**/D4**/D5**/D6**) or shock absorber stopper (A3**/A4**/A5**/A6**), install the switch on the opposite side to the stopper. Otherwise the switch on the head side will make contact with the stopper.
- Be careful of the lead wire direction when designing a 30 mm or less stroke length, since a switch is installed in each groove of the body.

■ **Do not apply a lateral load to the cylinder.**
With a lateral load, operation will become unstable.

■ **Avoid using this product where vibration is present.**
The product will be adversely affected by vibration and operation will become unstable.

Mounting, installation and adjustment

1. Common: when piping

CAUTION

■ **Apply adhesive to the M3 and M5 plugs (hexagon socket set screws) when changing the piping port position. (Low strength adhesives such as LOCTITE 222/221 or ThreeBond 1344 are recommended)**

■ **Piping port position and operating direction**

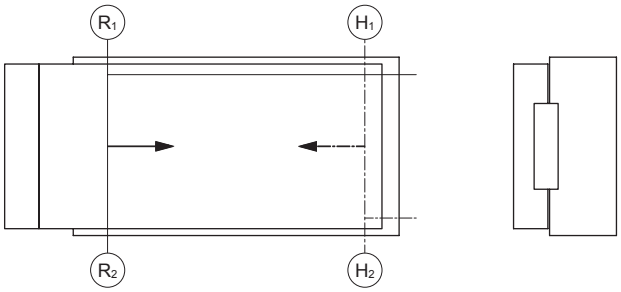

Ⓡ shows the rod side pressurizing port and Ⓗ the head side pressurizing port. When the product is shipped from the factory, ports other than R_1 and H_1 (R_2 and H_2 depending on the stopper position when a stopper is attached) are sealed with plugs.

■ **Precautions for piping fittings**
Be sure to attach a speed controller during piping before use. The applicable fittings are as below.

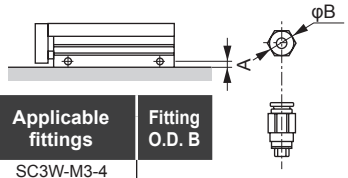

Item / Bore size (mm)	Port size	Port position dimension A	Applicable fittings	Fitting O.D. B
6	M3	4	SC3W-M3-4 SC3U-M3-4 SC3W-M3-3.2 SC3U-M3-3.2 GWS3-M3-S GWS4-M3-S	φ8 or less
8	M5	5.5	SC3W-M5-4 SC3W-M5-6 GWS4-M5-S GWS4-M5	φ11 or less
12		7	SC3W-M5-4 SC3W-M5-6 GWS4-M5-S GWS4-M5 GWL4-M5 GWL6-M5 GWS6-M5	φ14 or less
16		6.5		φ13 or less
20		9		φ18 or less
20	Rc1/8	8	SC3W-6-4, 6, 8 GWS4-6 GWS8-6 GWL6-6 GWS6-6 GWL4-6	φ24 or less

Mounting, installation and adjustment

2. Common: when installing

⚠ CAUTION

■ **Do not damage the surface flatness by denting or scratching the body (tube) mounting surface or the table surface.**
In addition, ensure that the flatness of the mating surface for body and table mounting is 0.02 mm or less.

■ **Observe the following bolt insertion lengths and tightening torque when mounting the body.**
[Fig. 1]

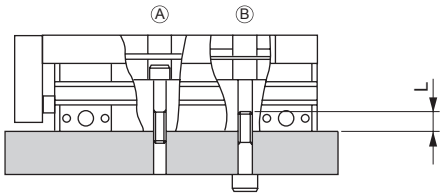

Item	Ⓐ		Ⓑ		
	Bolt used	Tightening torque (N•m)	Bolt used	Tightening torque (N•m)	Max. screw depth L (mm)
LCV-6	M3×0.5	0.6 to 1.1	M4×0.7	1. 4 to 2.4	8
LCV-8	M3×0.5	0.6 to 1.1	M4×0.7	1. 4 to 2.4	8
LCV-12	M4×0.7	1. 4 to 2.4	M5×0.8	2. 9 to 5.1	10
LCV-16	M5×0.8	2. 9 to 5.1	M6×1.0	4. 8 to 8.6	12
LCV-20	M5×0.8	2. 9 to 5.1	M6×1.0	4. 8 to 8.6	12
LCV-25	M6×1.0	4. 8 to 8.6	M8×1.25	12.0 to 21.6	16

■ **Observe the following bolt insertion lengths and tightening torque when installing the jig on the slide table or end plate.**
[Fig. 2]

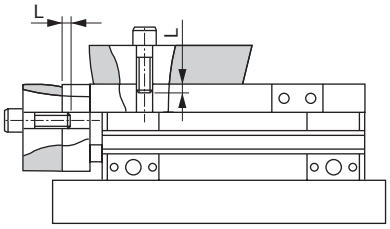

Item	Table		
	Bolt used	Tightening torque (N•m)	Insertion length L (mm)
LCV-6	M3×0.5	0.6	3
LCV-8	M3×0.5	0.6	3 to 4.5
LCV-12	M4×0.7	1.4	4 to 5.5
LCV-16	M5×0.8	2.9	5 to 6
LCV-20	M5×0.8	2.9	5 to 6
LCV-25	M6×1.0	4.8	6 to 7

Item	End plate		
	Bolt used	Tightening torque (N•m)	Insertion length L (mm)
LCV-6	M3×0.5	0.6	4.5 to 6
LCV-8	M4×0.7	1.4	4.5 to 7
LCV-12	M5×0.8	2.9	6 to 9
LCV-16	M6×1.0	4.8	7.5 to 9
LCV-20	M6×1.0	4.8	7.5 to 11
LCV-25	M8×1.25	12	9 to 11

■ **Observe the following tightening torque of bolts and nuts of the stopper.**
[Fig. A]

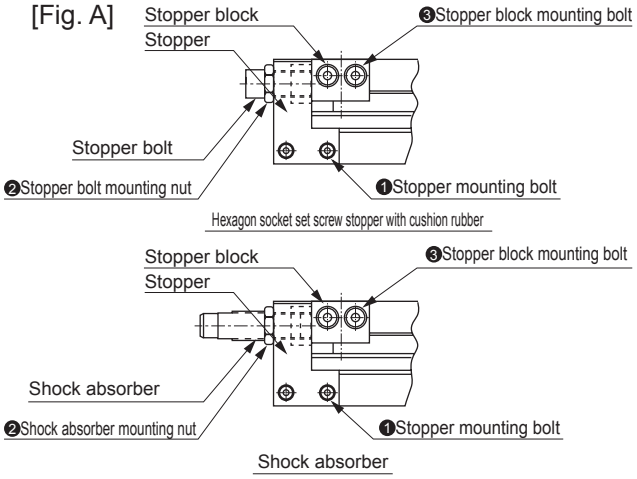

Model	❶ Stopper mounting bolt (N • m)	❷ Stopper bolt mounting nut ❷ Shock absorber mounting nut (N • m)	❸ Stopper block mounting bolt (N • m)
LCV-6	0.4 to 0.5	1.2 to 2.0	0.6 to 0.8
LCV-8	0.4 to 0.5	1.2 to 2.0	0.6 to 0.8
LCV-12	0.6 to 0.8	1.2 to 2.0	0.6 to 0.8
LCV-16	0.6 to 0.8	3.0 to 4.0	1.4 to 1.8
LCV-20	2.9 to 3.5	4.5 to 6.0	1.4 to 1.8
LCV-25	2.9 to 3.5	4.5 to 6.0	2.9 to 3.5

■ **The cylinder switch may malfunction if there is a magnetic substance such as a metal plate installed adjacently. To ensure safe operation, keep it 10 mm and over away from the cylinder surface or change the installation surface of the cylinder switch. (Common for all bore sizes)**

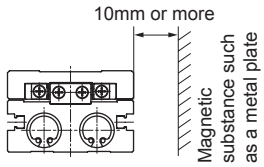

■ **The cylinder switch may malfunction if cylinders are installed adjacently. Check that the following distances are provided between cylinders. (Common for all bore sizes)**

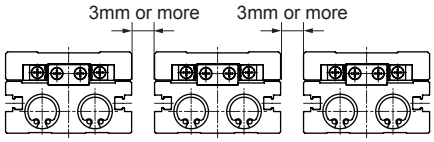

■ **CKD's shock absorber is a consumable part.**
Replace it when the energy absorption performance degrades or the operation is not smooth.

■ **When using a positioning hole, use a pin with dimensions that do not require press fitting. If a pin is press fitted, the load of press fitting may damage or distort the linear guide, lowering the accuracy.**
The recommended tolerance of a pin is JIS tolerance M6 or less.

■ **When attaching or detaching the workpiece to/from the slide table and base plate, be sure to keep the slide table itself retained.**

■ **Apply AFB grease (THK) to the guide rail in six months or when the number of operation cycles reaches one million, whichever comes first.**

MEMO

MEMO

WORLD-NETWORK

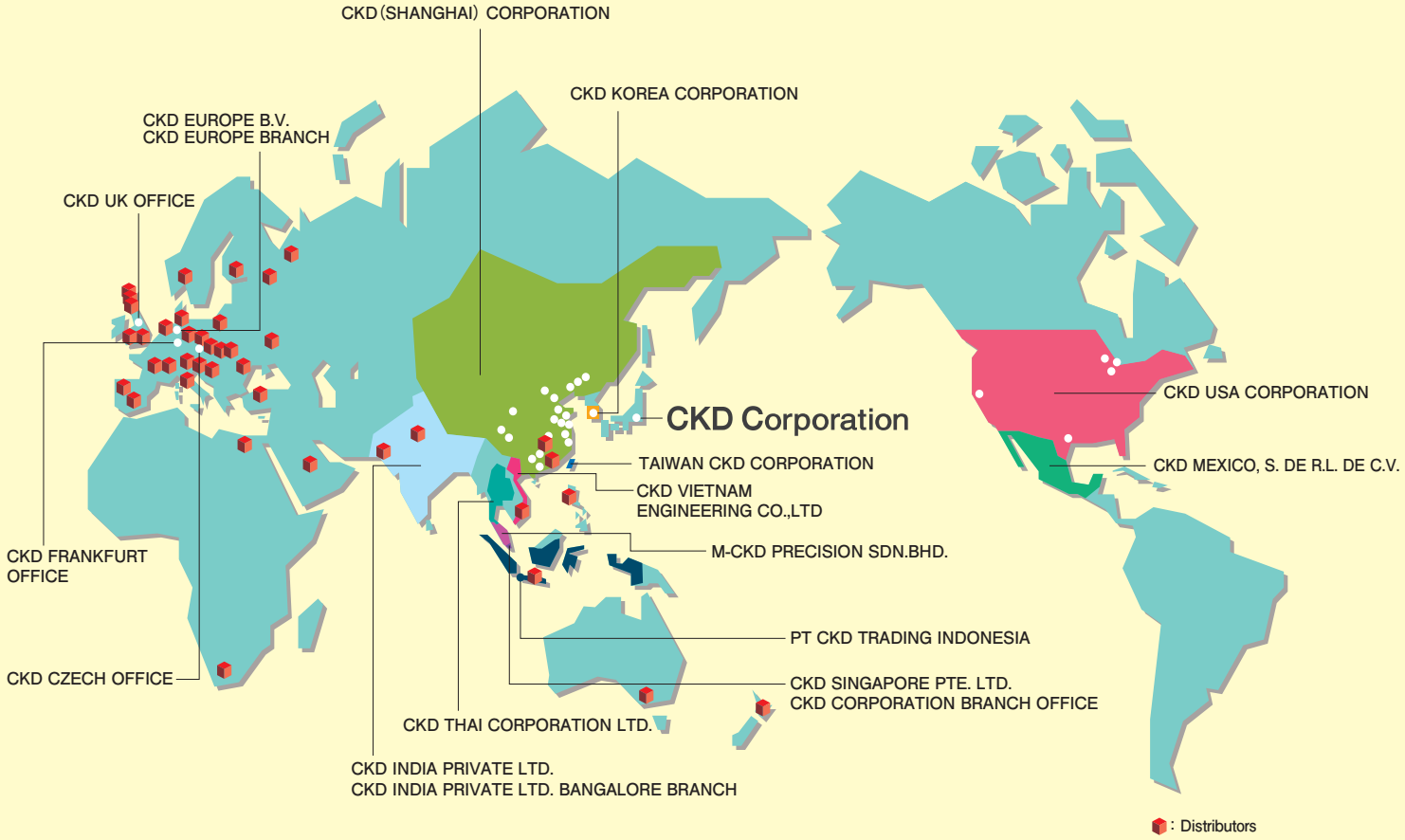

CKD Corporation

Website http://www.ckd.co.jp/

□ 2-250 Ouji, Komaki City, Aichi 485-8551, Japan
□ PHONE +81-568-74-1338 FAX +81-568-77-3461

U.S.A.

CKD USA CORPORATION

●CHICAGO HEADQUARTERS
4080 Winnetka Avenue, Rolling Meadows, IL 60008, USA
PHONE +1-847-368-0539 FAX +1-847-788-0575
・CINCINNATI OFFICE
・SAN ANTONIO OFFICE
・SAN JOSE OFFICE
・DETROIT OFFICE

Mexico

CKD MEXICO, S. DE R.L. DE C.V.

Cerrada la Noria No. 200 Int. A-01, Querétaro Park II, Parque Industrial Querétaro, Santa Rosa Jáuregui, Querétaro, C.P. 76220, México
PHONE +52-442-161-0624

Europe

CKD EUROPE B.V.

Beechavenue 125A, 1119 RB Schiphol-Rijk, The Netherlands
PHONE +31-23-554-1490
・GERMANY OFFICE

CKD CORPORATION EUROPE BRANCH

●SALES HEADQUARTERS
Beechavenue 125A, 1119 RB Schiphol-Rijk, The Netherlands
PHONE +31-23-554-1490
・CZECH OFFICE
・UK OFFICE

Malaysia

M-CKD PRECISION SDN.BHD.

●HEAD OFFICE
Lot No.6,Jalan Modal 23/2, Seksyen 23, Kawasan MIEL, Fasa 8, 40300 Shah Alam,Selangor Darul Ehsan, Malaysia
PHONE +60-(0)3-5541-1468 FAX +60-(0)3-5541-1533
・JOHOR BAHRU BRANCH OFFICE
・PENANG BRANCH OFFICE

Thailand

CKD THAI CORPORATION LTD.

●SALES HEADQUARTERS
Suwan Tower, 14/1 Soi Saladaeng 1, North Sathorn Road, Kwaeng Silom, Khet Bangrak, Bangkok 10500, Thailand
PHONE +66-(0)2-267-6300 FAX +66-(0)2-267-6305
・RAYONG OFFICE
・NAVANAKORN OFFICE
・EASTERN SEABOARD OFFICE
・LAMPHUN OFFICE
・KORAT OFFICE
・AMATANAKORN OFFICE
・PRACHINBURI OFFICE
・SARABURI OFFICE

Singapore

CKD SINGAPORE PTE. LTD.

No.33 Tannery Lane #04-01 Hoesteel Industrial Building, Singapore 347789, Singapore
PHONE +65-67442623 FAX +65-67442486

CKD CORPORATION BRANCH OFFICE

No.33 Tannery Lane #04-01 Hoesteel Industrial Building, Singapore 347789, Singapore
PHONE +65-67447260 FAX +65-68421022

India

CKD INDIA PRIVATE LTD.

Unit No. 607, 6th Floor, Welldone Tech Park, Sector 48, Sohna Road, Gurgaon-122018, Haryana, India
PHONE +91-(0)124-418-8212

CKD INDIA PRIVATE LTD. BANGALORE BRANCH

No. 201/B, 2nd Floor, Museum Terraces Apartment, No. 29, Museum Road, Bangalore-560001, Karnataka, India
PHONE +91-(0)80-4212-7008/7009 FAX +91-(0)80-4212-7007

Indonesia

PT CKD TRADING INDONESIA

●SALES HEADQUARTERS
Menara Bidakara 2, 18th Floor, Jl. Jend. Gatot Subroto Kav. 71-73, Pancoran, Jakarta 12870, Indonesia
PHONE +62-(0)21-2938-6601 FAX +62-(0)21-2906-9470
・BEKASI OFFICE
・KARAWANG OFFICE
・SURABAYA OFFICE

Vietnam

CKD VIETNAM ENGINEERING CO.,LTD.

18th Floor, CMC Tower, Duy Tan Street, Cau Giay District, Hanoi, Vietnam
PHONE +84-(0)24-3795-7631 FAX +84-(0)24-3795-7637

Taiwan

台湾喜開理股份有限公司
TAIWAN CKD CORPORATION

16F-3, No. 7, Sec. 3, New Taipei Blvd., Xinzhuang Dist., New Taipei City 242, Taiwan
PHONE +886-(0)2-8522-8198 FAX +886-(0)2-8522-8128
・新竹営業所(HSINCHU OFFICE)
・台中営業所(TAICHUNG OFFICE)
・台南営業所(TAINAN OFFICE)

China

喜開理(上海)機器有限公司
CKD(SHANGHAI)CORPORATION

●営業部 / 上海浦西事務所(SALES HEADQUARTERS / SHANGHAI PUXI OFFICE)
Room 601, 6th Floor, Yuanzhongkeyan Building, No. 1905 Hongmei Road, Xinhui District, Shanghai 200233, China
PHONE +86-(0)21-61911888 FAX +86-(0)21-60905356
・上海浦東事務所(SHANGHAI PUDONG OFFICE)
・無錫事務所(WUXI OFFICE)
・杭州事務所(HANGZHOU OFFICE)
・寧波事務所(NINGBO OFFICE)
・南京事務所(NANJING OFFICE)
・蘇州事務所(SUZHOU OFFICE)
・昆山事務所(KUNSHAN OFFICE)
・北京事務所(BEIJING OFFICE)
・天津事務所(TIANJIN OFFICE)
・長春事務所(CHANGCHUN OFFICE)
・大連事務所(DALIAN OFFICE)
・青島事務所(QINGDAO OFFICE)
・済南事務所(JINAN OFFICE)
・烟台事務所(YANTAI OFFICE)
・瀋陽事務所(SHENYANG OFFICE)
・重慶事務所(CHONGQING OFFICE)
・成都事務所(CHENGDU OFFICE)
・西安事務所(XIAN OFFICE)
・武漢事務所(WUHAN OFFICE)
・鄭州事務所(ZHENGZHOU OFFICE)
・長沙事務所(CHANGSHA OFFICE)
・広州事務所(GUANGZHOU OFFICE)
・深圳西事務所(WEST SHENZHEN OFFICE)
・深圳東事務所(EAST SHENZHEN OFFICE)
・東莞事務所(DONGGUAN OFFICE)
・厦門事務所(XIAMEN OFFICE)

Korea

CKD KOREA CORPORATION

●HEADQUARTERS
(3rd Floor), 44, Sinsu-ro, Mapo-gu, Seoul 121-856, Korea
PHONE +82-(0)2-783-5201～5203 FAX +82-(0)2-783-5204
・水原営業所(SUWON OFFICE)
・天安営業所(CHEONAN OFFICE)
・蔚山営業所(ULSAN OFFICE)

The goods and/or their replicas, the technology and/or software found in this catalog are subject to complementary export regulations by Foreign Exchange and Foreign Trade Law of Japan.
If the goods and/or their replicas, the technology and/or software found in this catalog are to be exported, law requires that the exporter makes sure that they will never be used for the development and/or manufacture of weapons for mass destruction.

●Specifications are subject to change without notice.

2018.1