INTERNATIONAL BIATHLON UNION

04

VERSION **2026**

ANNEXES TO THE IBU EVENT AND COMPETITION RULES

© **INTERNATIONAL BIATHLON UNION 2026**

www.biathlonworld.com

PRINCIPLES/COLOR CODES

a) The following articles of these Annexes A-D of the IBU Event and Competition Rules are 'Technical Rules' (as that term is defined in the Constitution) and therefore may be amended, rescinded or added to by the Technical Committee, without reference to any other body (but subject to the ultimate authority of Congress to annul such articles in accordance with Article 13.2.6 of the Constitution):

Annex A: **Art. 5**

Annex B: **Art. 3 - 4**

Annex C: **Art. 1.2 - 1.4** **Art. 2.1 - 2.2.3** **Art. 2.2.5 - 4 (complete)**

Annex D: **Art. 2.2.1** **Art. 2.2.3** **Art. 2.3.1 - 2.3.5** **Art. 3.3.1** **Art. 4.6.1 - 4.6.3** **Art. 4.7.1 - 4.9**

b) The following articles of these Annexes A-D of the IBU Event and Competition Rules may be amended, rescinded or added to by the Executive Board, upon the proposal of the Technical Committee (but subject to the ultimate authority of Congress to annul such Articles in accordance with Article 13.2.6 of the Constitution):

Annex A: **Art. 1 - 4 (complete)**

Annex B: **Art. 1 - 2 (complete)**

Annex C: **Art. 1 - 1.1.1** **Art. 1.5** **Art. 2.2.4** **Art. 5 - 6 (complete)**

Annex D: **Art. 1 (complete)** **Art. 2.1 - 2.2** **Art. 2.2.2** **Art. 2.3** **Art. 3.1 - 3.2.3** **Art. 3.3.2 - 3.4** **Art. 4.1 - 4.5** **Art. 4.6.4** **Art. 4.7** **Art. 4.10 – 4.11**

c) All of the articles of these Annexes to the Event and Competition Rules that are not listed in (a) or (b) above are 'Reserved Rules' (as that term is defined in the Constitution) that may only be amended, rescinded or added to by Congress, upon proposal of the Executive Board or the NF Members in accordance with Article 13.2.5 of the Constitution.

TABLE OF CONTENTS

Annex A	**Material Catalogue**	4
Annex B	**Duties of the Competition Jury, Technical Delegates and IBU Referees**	21
Annex C	**Training and Licensing of Technical Delegates and International Referees**	31
Annex D	**Competition Rules Summer Biathlon**	41

ANNEX A MATERIAL CATALOGUE

TABLE OF CONTENTS

1. **General Regulations** 4
2. **New Materials** 6
3. **Materials Specifications** 7
4. **Advertising** 15
5. **Inspection Procedures** 16

LIST OF TABLES

Table 1 **Biathlon Rifle Diagram** 18
Table 2 **Standard Dimensions for Metal Targets** 18
Table 3 **Standard Dimensions for Paper Targets** 19
Table 3A **Scoring Rings for Paper Targets** 19
Table 4 **Wind Flag Diagram** 20

1. GENERAL REGULATIONS

1.1 Purpose

The purpose of the IBU Materials Catalogue is to regulate all aspects of materials relating to biathlon competitions. It is based on the binding nature of the IBU Event and Competition Rules and is part of those rules. The Materials Catalogue provides the definitions, current specifications and requirements of all competition-related materials, the approval process for the admission of new materials, and the inspection procedures for enforcing the materials regulations. In essence, the Materials Catalogue safeguards:

a. the principle of fairness and equal opportunity for all competitors;

b. the safety and health of all persons associated with biathlon competitions;

c. the preservation of the nature and traditions of the sport of biathlon.

1.2 Definition

The term materials is sub-divided into two major categories: competition equipment and organization equipment.

1.2.1 Competition Equipment

Competition equipment refers to all items that a competitor wears or carries for a competition and official or unofficial training during an event.

1.2.2 Organization Equipment

Organization equipment consists of all the other materials that are required to organize a biathlon competition or training during an event that are not worn or carried by the competitor.

1.3 Prohibited Materials

In principle, all materials are prohibited that:

a. affect the natural push-off movement of competitors' feet and arms or those that enhance it (such as spring devices or other mechanisms in skis, poles, bindings or boots);

b. make use of sources of energy not originating from the competitor, such as artificial or chemical energy suppliers, electrical batteries, mechanical aids, etc.; an exception applies to heating devices for shoes and gloves only;
c. affect the external conditions of the competition to the detriment of other competitors, such as changing the track or snow conditions;
d. increase the risk of injury to competitors and other persons who are authorized to be present at the competition venue, when used normally;
e. products for ski preparation which contain Fluorocarbons (CF)
f. are prohibited by applicable law.

2. NEW MATERIALS

2.1 Definition

New materials are defined as any competition equipment or organization equipment that have not been approved or rejected by the IBU TC. Any new materials must be submitted to the IBU TC for approval before they can be used in an IBU event or competition.

2.2 Approval of equipment and intellectual property responsibility

Approval of equipment by the IBU confirms only that the equipment complies with the applicable technical, safety and functional requirements of the IBU rules and approval procedures.

Such approval shall not constitute any representation, warranty or confirmation by the IBU regarding intellectual property rights, including patents, trademarks, designs, copyrights or other proprietary rights that may apply to the equipment.

The manufacturer, supplier and/or user of the equipment shall bear sole responsibility for ensuring that the manufacture, sale, possession and use of the equipment does not infringe any third-party intellectual property rights. The IBU shall bear no liability for any intellectual property disputes or claims relating to approved equipment.

2.3 Approval Process

2.3.1 Procedure & Coordination with FIS

Any fundamentally new developments in equipment produced by the industry or the NFs that are directly used by athletes as a part of their competition performance for the following season must be submitted to the IBU (and the FIS in case of commonly used ski equipment) no later than 1 May of the year in which the season begins. All forms of data gathering instruments such as heart rate monitors, GPS devices, etc. do not require review/approval. The submission must be accompanied by appropriate information material. Prototypes may be submitted as well. New developments that are in compliance with the rules and also do not endanger the safety of the athletes and the safe conduction of the competitions will be immediately approved/accepted for competition use by the IBU TC/IBU Sports and Event Department.

IBU and FIS will update each other about new developments, prototypes, etc. for equipment used in both federations´ sports to ensure the same approval process.

2.3.2 Provisional Approval

In rare cases, provisional approval may be granted for a year, following which a definitive decision must be made in the subsequent season.

2.3.3 Standard Products

New designs of competition clothing, bindings, boots, rifle slings, headgear and gloves do not have to be presented to the IBU TC, provided that it is clear that the new products meet IBU rules. If the materials do not meet the rules or could present safety issues, they can be forbidden/banned on short notice at the discretion of IBU.

2.3.4 Availability

Any new materials must be accessible to all NFs and competitors in the following season.

3. MATERIALS SPECIFICATIONS

3.1 Competition Equipment

3.1.1 Competition Skis

Changes to these rules will be published as required.

3.1.1.1 Ski Length

Minimum ski length is the competitor's height minus 10 cm.
Maximum length: no limit

3.1.1.2 Ski Width

As commercially available, otherwise no limit/restrictions.

3.1.1.3 Ski Tip Section

As commercially available, otherwise no limit/restrictions.

3.1.1.4 Ski Tail Section

As commercially available, otherwise no limit/restrictions.

3.1.1.5 Weight/Mass

The total weight of a pair of skis must be at least 750 grams, without bindings. There are no restrictions on the distribution of weight/mass.

3.1.1.6 Construction

3.1.1.6.1 Type of Construction

No limitations.

3.1.1.6.2 Shaping

As commercially available, otherwise no limit/restrictions.

3.1.1.6.3 Gliding/Running Surface

As commercially available, additionally the following criteria are to be met: the entire width of the running surface can be smooth or slightly grooved length-wise. With the exception of the running groove, however, the level must be constant in the entire length and width. Climbing aids in the form of scale patterns or step patterns are permitted. Devices that are activated by any energy other than the competitor's own muscle power are not permitted.

3.1.1.6.4 Top Surface

No limitations.

3.1.1.6.5 Edges

The sidewalls may not be angled as they extend upwards so that the ski base is narrower than the upper surface (i.e. wedge form not allowed).

3.1.1.7 Stress Properties/Durability

No limitations.

3.1.2 Ski Bindings

There are no restrictions on the type of materials used or the make.

3.1.3 Competition Ski Boots

As commercially available, otherwise no limit/restrictions.

3.1.4 Competition Ski Poles

3.1.4.1 Specifications

a. The maximum length of the poles must not be longer than the competitor's body height, measured by placing the pole tip on the ski in front of the binding;

b. The pole must have a fixed length: the shaft must not be telescoping or of variable length;

c. The poles must not have any energy source to improve push, such as springs or other mechanical devices;

d. There is no upper or lower weight limit for poles;

e. The poles may be asymmetrical: there can be a distinct right and left-hand pole;

f. The pole must not cause changes to the competition conditions such as changes to track or snow conditions;

g. The handgrip must be permanently fastened to the shaft. There are no restrictions concerning its shape, construction or materials;

h. The strap must be connected to the handgrip or the shaft but may be detachable. It can be adjustable both in length and width. There are no restrictions on materials;

i. There are no limitations on the shape or materials of the shaft, or on the mass distribution;

j. Exchangeable baskets with different geometric features and materials to match different snow characteristics are allowed;

k. The tip may be connected at any angle to the shaft. One or more tips are allowed. There are no restrictions on materials.

3.1.5 Clothing

The following rules apply to competitors' apparel:

a. Advertising on the competition clothing must be in accordance with the current IBU rules;

b. Padding is only allowed on the inside of the competitor's racing suit. The total thickness of the padding, cloth and lining of the competition garment may not exceed 6 mm when measured in an unpressed state, except on the back of the suit, where the rifle is carried. The back area is not subject to any restriction on padding;

c. On the outside of the sports clothing no adhesive materials, such as Velcro or tape, wax, resin, glue or any additional stitching (with the exception of the stitching to fasten the padding) may be used. However, non-slip material may be used up to 3mm in thickness and not more than a total of 6 mm when measured together with any padding inside the racing suit as mentioned in b. above;

d. A special device for preventing the shooting sling from slipping down is allowed on the sleeve of the competitor's upper arm.

3.1.6 Rifles

3.1.6.1 General

Rifles may not be of automatic or semi-automatic design. Loading or unloading may only be done using the competitor's own muscle force.

3.1.6.2 Parts of a Biathlon Rifle

A diagram is provided in Table 1 of a biathlon rifle with the names of the parts.

3.1.6.3 Approved Types of Actions

The authorized types of rifle actions are as follows:

a. the common bolt system;

b. pistol grip cocking;

c. straight pull action;

d. straight pull action with ball-bearing locking.

3.1.6.4 Specifications

Rifles used in all IBU Events must conform with all applicable laws in the respective territory and meet the following specifications:

a. The distance between the center-line of the barrel and the lower edge of the forestock, including magazine and trigger guard, must not exceed 140 mm;

b. The thickness of the cheek piece must not exceed 40 mm;

c. A folding stock is not permitted;

d. The sight system may not have a magnifying effect. The insertion of optical lenses into the eye for this purpose is also prohibited. Nevertheless, the use of polarized filters is allowed;

e. The caliber of the barrel must be 5.6 mm (.22 inch rifle);

f. The trigger resistance must be a minimum of 0.5 kg, regardless of the point on the trigger where it is measured;

g. The trigger must be surrounded by a rigid, closed trigger guard;

h. The rifle may have a sling and must have a carrying harness. The width of the sling must not exceed 40 mm;

i. Including all accessories – except magazines and ammunition – the minimum weight of the rifle must not be less than 3.5 kg;

j. The magazines must not permit the insertion of more than 5 rounds. For the relay competition, three spare rounds may be carried in a magazine installed for that purpose, or in a special quick-release device. However, a spare round may not be carried in the chamber. The magazines may be carried in the forestock or the butt;

k. The advertising attached to the rifle must be in conformity with current IBU regulations;

l. On both sides of the forestock, a smooth – meaning flat or nearly flat – rectangular IBU marking surface must be kept free of other markings and reserve ammunition: 15 cm in front of the trigger or the bolt handle or the front end of the trigger guard (the competitor may choose), over the entire width of the stock and at least 4 cm high. Alternatively, the bolt handle or the trigger guard may extend into this area, however, not so far that the IBU rifle control sticker is covered up or cut off.

3.1.6.5 Magazines

3.1.6.5.1 General

A rifle magazine is a component of a firearm designed to store and feed ammunition into the firing chamber. It accommodates a maximum of five rounds, which must be manually loaded into the firearm's chamber one at a time for individual firing. Detachable magazines are required.

The use of double magazines, side-by-side magazines, or any self-manufactured magazines is prohibited. Only manually loaded magazines are permitted. Only manually loaded magazines are permitted.

3.1.6.5.2 Magazine well

The magazine well is the section of a firearm that serves as a housing or cavity for manually loading the magazine. It provides guidance and a secure fit for the magazine, ensuring proper alignment for the smooth feeding of ammunition into the firearm's chamber. The magazine well must be distinctly separated from the rifle magazine holder, and the magazine should be clearly separated from the magazine well when not in use.

3.1.6.5.3 Magazine holder

A magazine holder, often referred to as a magazine pouch or magazine carrier, is an accessory designed to hold and transport the necessary number of magazines. It allows for quick access to magazines during reloading.

The magazine holder should be constructed to ensure that magazines remain secure and are not lost during competition. It can be mounted on the rifle stock, partially inserted into the stock, or fully integrated into the stock, provided it remains clearly separate from the magazine well. The magazine holder can accommodate both single and multiple magazines. One stock can have multiple magazine holders.

3.1.7 Ammunition

3.1.7.1 Required Characteristics

Only international standard .22 inch (5.6 mm)-long rifle rim-fire ammunition may be used, and it is forbidden to bring ammunition not conforming to these rules to the venue. The bullets must be made of a uniform substance, lead or a similar soft material such as a lead alloy. The weight of the bullet must not exceed 2.75 grams and not be less than 2.55 grams.

3.1.7.2 Muzzle Velocity

The muzzle velocity must not exceed 360 m/s, measured 1 m after leaving the muzzle.

3.1.7.3 Hit Impact Momentum

The impact momentum of bullets fired from a distance of 50 m must not exceed 0.9 Ns (=0.09 kgm/s) with a maximum tolerance of 11%, i.e. 0.099 Ns. This means that the maximum permitted impulse is 1.0 Ns (= 0.1 kgm/s).

3.1.8 Rifle Bags

Rifle bags must provide a window or opening of minimum 15 x 15 cm that allows a clear view of the rifle bolt.

3.2 Organization Equipment

3.2.1 Target Systems

3.2.1.1 Uses of Targets

The numbers and types of targets authorized for use in various competitions are detailed in the IBU Event and Competition Rules. Targets must be situated, set up, numbered and maintained as detailed in the IBU Event and Competition Rules.

3.2.1.2 Types of Targets

There are three main types of targets used for biathlon training and competitions – metal, paper and fully electronic targets.

3.2.1.3 Targets – OWG, WCH, WC, OECH, JWCH and IBU Cup

At OWG, WCH, WC, OECH, JWCH and IBU Cup competitions, only electro-mechanical, electronic and fully electronic target systems that are in compliance with the current IBU Materials Catalogue may be used.

3.2.1.4 Targets – Junior IBU Cups, CCH and CC

At Junior IBU Cups, CCH and CC competitions, mechanical manually-operated targets will be permitted, but the use of electro-mechanical and electronic targets is to be encouraged. The ropes for operating manually-operated targets should be placed through tubes under the shooting ramp to the rear of the ramp so that the targets can be operated without interference to shooters.

3.2.1.5 Metal Target Operating Systems

Metal targets are produced in mechanical and electro-mechanical variations. They operate as follows:

a. Mechanical Target Operating Systems

   Mechanical targets indicate the hit of a bullet by the physical force of the bullet impact knocking down the target and replacing it with a white indicator disc. Mechanical targets can also be manually reset after a shooting bout by pulling a rope to bring the fallen target plates back into position. Changing between standing and prone configurations is done manually with a rope;

b. Electro-Mechanical and Electronic Target Operating Systems

   In an electro-mechanical or electronic system, targets are reset and configurations changed by remote control with the aid of electrically powered servo-motors. With electro-mechanical or electronic systems, hits are normally recorded electronically through a magnetic, motion or impact sensor in the target. Hits are normally visually indicated with a mechanically- or electronically-activated white indicator disc.

3.2.1.6 Metal Target Description

Targets must consist of a white target face plate with five target apertures, behind which there must be five independently operating knock-down, falling-plate or electronic sensor plate scoring targets. The scoring plates must be black. A hit must be indicated by the black target circle being replaced by a white indicator disc.

3.2.1.7 Paper Target Description

Paper targets must be identical to the metal targets in size and appearance. The paper background must be white in color and may not be reflective. The five circular targets must be black. Paper targets must have a minimum weight of 140g/m2. See Table 3 for standard dimensions for biathlon paper targets.

If electronic targets are used for zeroing/training such targets must show an identical picture as the paper targets on the target display.

3.2.1.8 Target Sizes and Aperture Positions

Tables 2 and 3 detail all the required dimensions and the positioning of the target circles for both metal and paper targets. The diameters of the black circles for the aiming and the scoring areas, for both metal and paper, are as follows:

Standing – aiming 115 mm – scoring 115 mm
(dotted line at 110 mm on paper targets)

Prone – aiming 115 mm – scoring 45 mm
(dotted line at 40 mm on paper targets).

The paper target may have scoring points and rings. Precise measurements for such scoring rings are stated in table 3A.

3.2.1.9 Functional Requirements for Metal Targets

The target system must meet the following requirements:

a. Reliable functioning under all types of weather conditions in which competitions are held;

b. That hits are shown at a standard hit impact momentum (releasing impact) that has been determined by the IBU TC, to ensure that the releasing impact momentum is the same for all targets used during competition.

3.2.1.10 Tolerances and Shape Requirements

Size for target openings must be:

Diameter 115 mm, +/- 0.3 mm for standing position;
Diameter 45 mm, +/- 0.3 mm for prone position.

The target apertures used for shooting in the standing and prone positions must be concentric.

Permissible tolerance shall be 0.3 mm. The aperture rim must be well defined and devoid of deformations. The centering of the prone target aperture must be within a tolerance of +/- 0.5 mm.

3.2.1.11 Deformations

Continuous use of a target system can result in the flat surface becoming deformed.

Such deformations must not deviate more than 1 mm from the remaining surface of the target. The depth of the deformation must be measured relative to the edge of the surface of the 115 mm diameter target.

3.2.1.12 Materials and Hardness

Metal targets must be made of steel with a hardness of at least 350 HB, with a hit plate with a minimum of 480 HB.

3.2.1.13 Release Impulse

A target should show a hit when hit by a bisected bullet at a release impulse of at least 0.45 Ns. A release tolerance of +/- 33.33% is permitted. That means that all target systems must be set in such a way that a hit with sufficient impulse will be recorded wherever the bullet hits the target. A release impulse of less than 0.3 Ns will not be shown as a hit, while a release impulse greater than 0.6 Ns will definitely show as a hit.

3.2.1.14 Special Requirements for Electronic Target Systems

In addition to the standard requirements for biathlon targets, electronic systems must comply with the following:

a. Data Feed Distribution

   The system must be able to transfer data to multiple operation points such as timing, data processing and TV (including graphics) production;

b. Interface Hardware

   All data flow other than system-internal processes must use a RS-232 interface or other IP protocols/ socket communication. No buffering or handshake controls are necessary;

c. Communication Protocol

   In order to process and log the data feed with standard PC equipment, a simple ASCII or JSON coded protocol must be used. The following information must be transmitted:

   - competitor arrival at shooting lane (start of shooting);
   - assignment of start number to shooting lane, including A to D indicators for relay competitions;
   - missed shot(s);
   - target hits (including target plate numbers 1 to 5);
   - end of shooting bout (important data such as shooting lane, start number, total misses, number of spare rounds used in relay competitions, and shooting time should be in this feed);

d. Transmission Delay

The maximum delay, from when a target hit or miss is registered by the target sensor system to the complete transmission via the data output line, must not exceed 200 ms. This limit must also be maintained during heavy shooting on the range, such as in the pursuit and mass start competitions;

e. Backup Systems

To guarantee reliable data feed during major international events, the target system must have two completely separate processing systems, and therefore must provide two data feeds to the main and backup timing, data processing and TV graphics systems.

3.2.1.15 Approval of Targets

All target systems that are to be used during IBU competitions will require approval by the IBU TC. Authorization of a target system will be granted to manufacturers who submit a prototype to the IBU that the IBU deems acceptable according to these regulations. Approval can be withdrawn if technical error occurs if a particular type of target system becomes technically outdated and/or if unauthorized systems are used.

3.2.1.16 Targets Currently Authorized by the IBU

At present, the following target systems are approved for use:

a. Mechanical Systems

Kurvinen – FIN;
Devon model BT-500 – USA;
HORA 1000 – GER;
AccuPro model RTI-1025 – CAN;
VingMek – NOR;
Kiwi - FRA

b. Electro-mechanical Systems

Kurvinen (KES versions 2002-2019) – FIN.

c. Electronic Systems

HoRa 2000 E – GER.

d. Fully Electronic Systems

Megalink BIA1200-D2 – NOR;
Kurvinen ESB-2 - FIN.

3.2.2 Wind Flags

Wind flags for the shooting range must be of a highly visible color, 10 x 40 cm in size and must be made from thin artificial silk or natural silk. Flags may not weigh more than 5 grams. Their construction must allow easy 360 degree rotation, pivoting at a right angle to the flag post. A diagram of a wind flag construction is shown in Table 4 of this Annex.

3.2.3 Start Numbers

3.2.3.1 Sizes

Start numbers must be of the following dimensions:

a. Front and back numbers: outlined figures or block figures – height at least 10 cm, width (of each line in each figure) at least 1.5 cm for outlined figures and 2 cm for block figures;

b. Side numbers on the start number: height at least 6 cm, width at least 1.2 cm. The bottom edge of the figures on the sides must be spaced 8.5 cm from the bottom edge of the start number;

c. Thigh numbers: 8-12 cm high and 1-2 cm wide;

d. Helmet numbers: during competition, helmet numbers with the dimensions of 4 cm high x 0.5 cm wide should be attached.

3.2.3.2 Fabric/Materials

Pullover (vest) start numbers must be made of smooth fabric, 100% polyester interlock or 100% polyester-warp knitting. The start numbers must be tailored to the needs of the competitors: they must not impede the movement of their shoulder joints.

3.2.4 Timing Equipment

At all IBU events, computer-supported electronic timing equipment must be used. The equipment must be able to interface electronically with the target system in use and must have electronic sensors at the start and finish. Additionally, the equipment system must be able to receive and process manually- or automatically-activated intermediate time signals. For manual timing, good quality professional stop watches or manually activated electrical timing devices must be used.

4. ADVERTISING

4.1 Advertising Rules

The IBU advertising regulations (IBU Advertising Rules) apply to all IBU events.

4.2 Commercial Markings on Equipment

Technical specifications of the size, the form and the number of commercial markings on equipment will be decided by the IBU EB and will be published as Advertising Rules in a separate document.

4.3 Measurement of Advertising Surfaces

Advertising has a two dimensional shape defined by its text, line boundary or color boundary. Advertising may be square, rectangular, triangular, circular, polygonal or irregular in shape. The size of the surface area that the text or the area within the boundary occupies must be measured so that the advertising can be approved or disallowed depending on the sizes stipulated above.

The size of symbols on items of clothing is measured by placing the item of clothing unstretched on a flat surface, such as a table.

4.3.1 Measuring Procedures

The size of a commercial trademark is the surface area within a line that follows the actual outline of the full trademark. If the trademark is contained within an area of different color, the total surface area having a different color from the competition clothing is to be measured.

4.3.2 Text or Letters

If the text is within a line or color boundary, the applicable shape formula is to be used. If the text or letters stand out on the general garment background, the outline of the outermost tips of the letters will be traced and the area of the shape thus created will be calculated.

4.3.3 Measurement of Geometric Shapes

The surface area of a square, rectangle, triangle, circle or polygon will be determined using the standard geometric formula. If there is doubt about whether a polygon is a polygon, it is to be measured as irregular.

4.3.4 Irregular Shapes

If the appropriate equipment is available, a computer scanner may be used to determine the surface area. If no computer devices are available, a string must be used to trace the outline to determine the number of cm^2 in the area.

4.4 Preliminary Examination of Advertising

In cases of doubt about the size of advertising, NFs are requested to send an actual size fax or photocopy to the IBU as early as possible before the start of the competition season so that its size can be determined. If there is uncertainty about any advertising after the start of the competition season, NFs will be requested to present the items at the latest at the preliminary inspection of materials/equipment and clothing for the respective event.

5. INSPECTION PROCEDURES

5.1 General

Competition and host venue equipment must undergo inspection to ensure that all materials are in compliance with all IBU regulations.

5.2 Competition Equipment

The inspections that competition equipment must undergo are detailed in the IBU Event and Competition Rules. Inspections will be conducted primarily by the organizing staff appointed for that purpose and by the IBU Referee Material Control responsible for an event. Competition juries, RD, TDs and IBU Referees are responsible for the effective and correct implementation and enforcement of materials inspections.

5.3 Organization Equipment

TDs and IBU Referees are responsible for ensuring that host venue equipment used within their area of responsibility is functional and conforms with all IBU regulations.

5.3.1 Specific Checks

5.3.1.1 Targets

a. placement and levels;
b. functioning, paint and maintenance;
c. deformation of face and target plates;
d. condition of moving parts;
e. position of wires and cables;
f. diameter measurement of target apertures;
g. centering of prone apertures;
h. strike test of target release impulse;
i. routing of reset ropes in mechanical systems;
j. backup system for those systems that require electrical power.

5.3.1.2 Timing Systems

a. principle of operation;
b. functioning and maintenance;
c. backup and outage reserve systems;
d. power sources;
e. placement of sensors;
f. computer capabilities, including speed of producing printed results;
g. interface with electronic target systems.

5.3.1.3 Computers for Start Number Draws

a. functioning and maintenance;
b. printers;
c. display device, projector;
d. software program – validity, possibility of manipulation;
e. backup and spares;
f. total system interfaces and placement;
g. speed of producing start lists.

5.3.1.4 Other Organizational Equipment (in IBU Event and Competition Rules)

a. wind flags – placement, operation, specifications;
b. shooting mats – placement, specifications;
c. rifle racks – construction, placement, markings;
d. lane markers – placement, color, no interference with shooting;
e. numbering and signage – placement, sizes, colors.

5.4 Inspection Instruments, Tools and Materials

The following is a list of devices required for equipment/material inspections and other checks that should be available to the responsible officials:

a. measuring tapes (50 or 100 m) and/or measuring wheel and/or GPS devices – for various measurements;
b. water/bubble levels and/or laser leveler – for various checks;
c. radar chronograph – for checking ammunition velocity;
d. strike and/or hit impulse tester – for target plates;
e. centering template – for prone target apertures;
f. weigh scale – for weighing rifles and skis;
g. templates – for measuring rifle dimensions;
h. calipers, rulers – for measuring the dimensions of rifles, skis, advertising;
i. trigger weights – for measuring trigger resistance;
j. stickers, paint – for applying inspection markings.

TABLE 1 BIATHLON RIFLE DIAGRAM

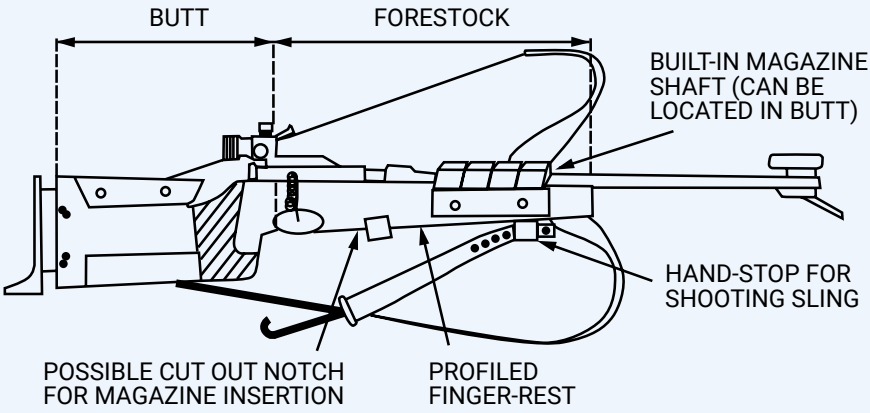

TABLE 2 STANDARD DIMENSIONS FOR METAL TARGETS

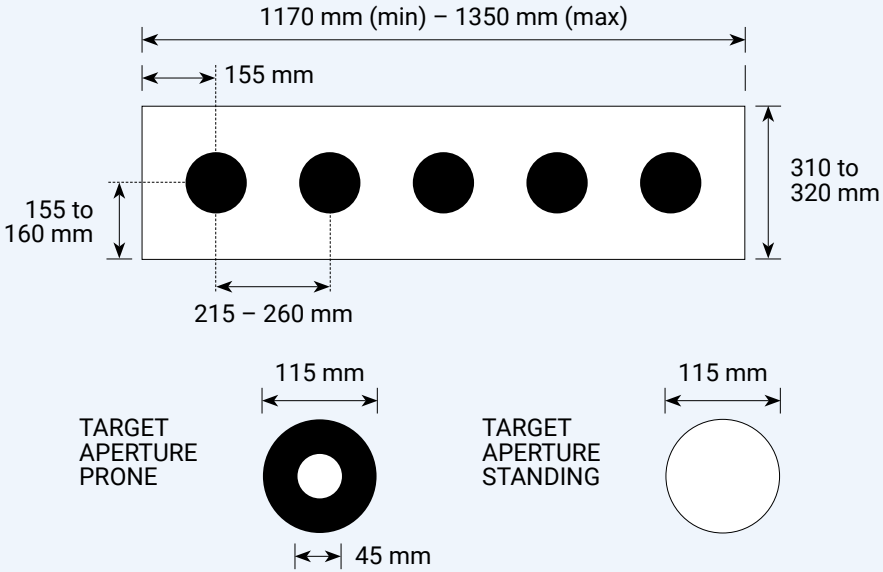

TABLE 3 STANDARD DIMENSIONS FOR PAPER TARGETS

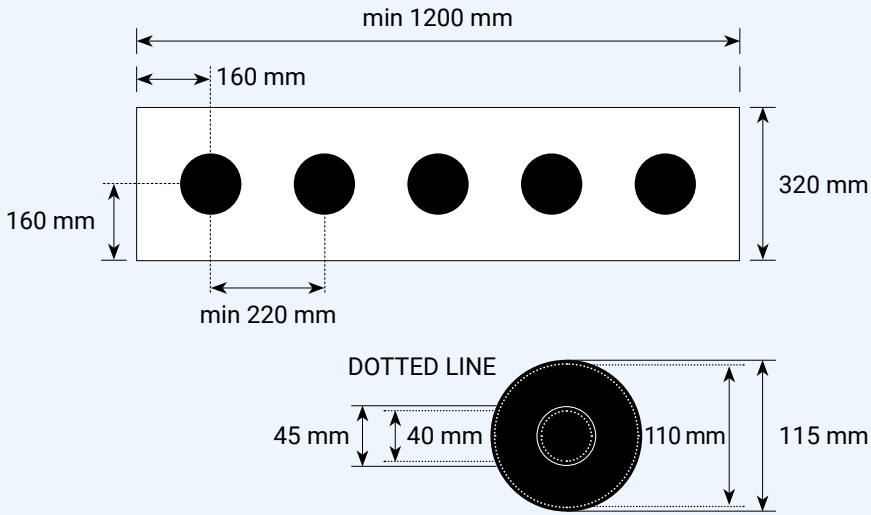

TABLE 3A SCORING RINGS FOR PAPER TARGETS

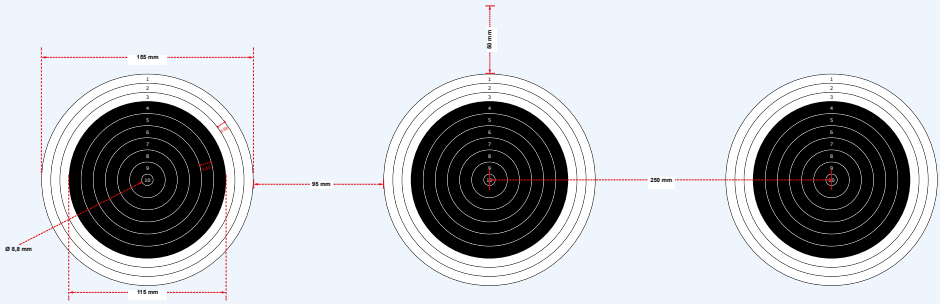

TABLE 4 WINDFLAG DIAGRAM

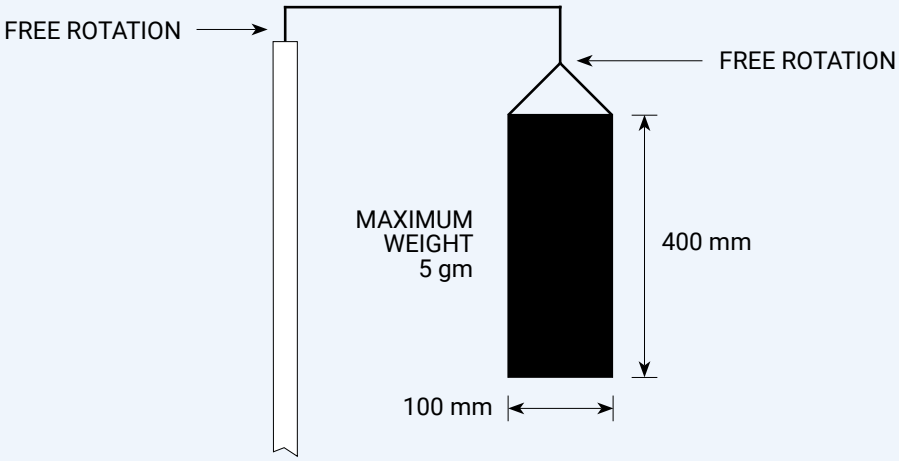

ANNEX B DUTIES OF THE COMPETITION JURY, TECHNICAL DELEGATES AND IBU REFEREES

TABLE OF CONTENTS

1. **Competition Jury** 21
2. **Jury of Appeal** 23
3. **Technical Delegates** 24
4. **IBU Referees** 28

1. COMPETITION JURY

1. General

1.1 Purpose

The powers, election, composition and various procedures of Competition Jury operations are detailed in the IBU Event and Competition Rules. This Annex provides additional procedural directives and the specific tasks of the Competition Jury.

1.1.1 Procedure and Competencies for the Competition Jury

a. The composition of the Competition Jury is stipulated in the IBU Event and Competition Rules;
b. The Competition Jury imposes penalties and disciplinary measures following reports from the RD, TD(s), IBU Referees and/or competition officials on the basis of observations by its members or as a consequence of protests;
c. Before a Competition Jury can impose a penalty, the person affected must be given a hearing, as far as possible and feasible;
d. The Competition Jury must be independent. The Competition Jury will not be restricted in the admission or evaluation of evidence;
e. If the Competition Jury does not uphold a protest submitted in accordance with Article 10 of the IBU Event and Competition Rules, an appeal may be lodged with the Jury of Appeal at events where existing. The same applies for appeals against penalty and disciplinary decisions of the Competition Jury.

1.2 Substitute Chairperson

If the Competition Jury chairperson is absent, the remaining jury members will appoint a replacement from among themselves to chair the meeting.

1.3 Competition Jury Meetings

The Competition Jury will meet when so directed by the Competition Jury chairperson. Meetings will normally be held as follows:

a. immediately after the team captains' meeting where it was elected;
b. approximately one hour before the start of the competition;
c. at any time during the competition when directed by the Competition Jury chairperson;
d. immediately before the last finish in the competition, or as soon as possible after the last shooting bout;
e. at any other time when a meeting is called by the Competition Jury chairperson.

1.4 Duties of the Competition Jury

The Competition Jury has the following duties:

1.4.1 Prior to the Competition

a. to check if the competition venue is in compliance with the rules;
b. to check the eligibility of all competitors registered for the event;
c. to supervise the draw;
d. to determine if a competition has to be postponed or annulled due to serious difficulties (such as extremely unfavorable weather conditions – extreme cold, high winds, etc.);
e. to restrict or prohibit training on the competition venue due to adverse circumstances such as very wet snow or very little snow that could jeopardize the conduct of the competitions;
f. to decide if, and under which conditions, a late entry may be accepted;
g. to decide if a competitor properly entered for participation may be replaced by a substitute in the case of force majeure;
h. to decide on protests concerning the eligibility of competitors;
i. to check if the qualification records of a competitor submitted by a NF permit the competitor's participation in an IBU Event, or if start must be denied;
j. to appoint a Competition Jury member to be permanently present on the range during the competition;
k. to appoint a Competition Jury member to assist at the inspections of the equipment;
l. to order ammunition checks, if required;
m. to decide if the competition can be started or has to be rescheduled.

1.4.2 During the Competition

a. to ensure that the competition is conducted according to the IBU Event and Competition Rules;
b. to direct the necessary measures if difficulties arise – such as heavy fog or a storm – that seriously endanger the correct and fair conduct of the competition: an extreme option may be to stop the competition;
c. to decide on the admission of competitors who arrive late at the start due to force majeure.

1.4.3 After the Competition

a. to oversee the critical process that begins immediately after the last finish, relating to the authorization of the unofficial awards ceremony and the posting of provisional results;
b. to decide on protests;
c. to impose or reject the penalties for rule violations or other issues reported by the TDs, IBU Referees, Competition Jury members and officials of the organizing committee;
d. to determine necessary time adjustments;
e. to annul a competition, if necessary;
f. to order the repeat of competition, if justified and possible.

1.4.4 Before, During and After the Competition

The Competition Jury must be prepared at all times to decide on all matters that are not covered in the Rules or other IBU regulations.

2. JURY OF APPEAL

2.1 The time limit for lodging an appeal against the imposition of a penalty or a disciplinary measure, is 15 min. This time limit will begin, before and during the competition, from the notification of the competition jury's decision and, after a competition, beginning from the publication of the final results.

2.2 The Jury of Appeal must be able to convene within a minimum of time whenever a meeting is required, as directed by the Jury of Appeal chairperson, and must remain readily available for its duties for 15 minutes after the final results have been published.

2.3 The appeal is to be lodged in writing with the chairperson of the Jury of Appeal at the competition office. The appeal must be accompanied by a bond of €150 to be left at the competition office, which will be forfeited to the IBU if the appeal is denied.

2.4 The chairperson of the Competition Jury must present the reasons for its decision to the Jury of Appeal.

2.5 The person concerned is to be given a legal hearing and access to the services of an adviser and interpreter. The decision is to be submitted in writing and be kept at the premises of the IBU.

2.6 The appeal will be denied in the event of the non-appearance of the appellant.

2.7 The Jury of Appeal will not be restricted in the admission or evaluation of evidence.

2.8 The decisions of the Jury of Appeal may not be challenged.

3. TECHNICAL DELEGATES

3.1 General

Regulations for the selection, appointment and general duties of TDs are given in the IBU Event and Competition Rules. This Annex provides more specific guidelines for the performance of TD duties. TDs appointed for IBU events must consult both this Annex and the IBU Event and Competition Rules.

3.2 Principles of the TD Function

TDs have three primary functions at an IBU event:

a. to assist the RD in technical matters;

b. to ensure that the event and its competitions are conducted in accordance with the IBU Event and Competition Rules and with other pertinent IBU regulations;

c. to act as a consultant and advisor to the OC to ensure that the competitions are held as well as possible.

As well, the TD is always the Competition Jury chairperson, an extremely important position. Additionally, the TD functions as the leader of the IBU technical group, made up of IBU Referees.

TDs must conduct their duties with dignity, competence, caution and objectivity. They must treat competitors, team staff, OCs and IBU Referees with respect and must demand to be treated with the same respect, as the technical representative of IBU, by all persons involved with the event. TDs must stop all attempts by anyone to interfere with their work or to usurp their authority or mandate. In serious cases of interference, TDs must report the circumstances to the IBU and to the IBU Race Director. OCs, teams and IBU Referees must follow the directions given in accordance with the IBU regulations by the TD in the organization and conduct of the event.

3.3 Contact with OCs and Site Visits

3.3.1 Establishing Contact

As soon as the TDs have been appointed for the various events, the IBU must inform the OCs of what TDs have been appointed for the following season. Normally the OCs will contact the TD shortly after being advised.

3.3.1.1 Continuing Contact and Problem Solution

After initial contact is established, the TD and OC may communicate as necessary. However, it is advisable to forward copies of all written correspondence to the IBU RD or headquarters. If any problems arise with the OWG or WCH, the IBU must be informed immediately.

3.3.2 Inspections and Site Visits

TDs should inspect the site of the events for which they have been appointed in time to advise of necessary changes to the facilities or plans, and to give timely assistance to the OC. Inspections are to be made as follows:

3.3.2.1 OWG

Normally the TD should first visit the site for an inspection and meetings shortly after the host of the Games has been announced. The visit is to be organized in consultation with the IBU and the OCs. Further visits will be made as necessary.

3.3.2.2 WCH and JWCH

If deemed necessary, the TD may inspect the competition venue not later than eight months prior to the beginning of the event unless agreed that the IBU RD will make the inspections and report back to the TD.

3.3.2.3 WC, CCH and CC Events

The inspection must be made not later than four months before the event. If the OWG, WCH, JWCH or WC event have been held on the site within the previous two competition seasons, it will not be necessary to make an inspection prior to the coming event. However, if major changes have been made or if the OC wishes an inspection, the TD will inspect unless agreed that the IBU RD will make the inspections and report back to the TD.

3.3.3 Areas to be Inspected

During the inspection the following must be confirmed:

a. The competition venue must be in accordance with the IBU Event and Competition Rules;
b. All preparations for the event must be in accordance with the IBU Event and Competition Rules;
c. The structure of the organizing committee must be appropriate and the officials appointed for the event must be properly trained and prepared, and a sufficient number have the required IBU Referee license;
d. Accommodation and food arrangements for teams must meet the requirements, including costs per person for full board;
e. Transport plans must be functional and distances within the allowed limits;
f. Rifle and ammunition import and export laws and the storage arrangements made for the rifles and ammunition must be clear;
g. Appropriate publicity arrangements must have been made with the press, radio and TV;
h. Measures for conducting doping controls and blood tests must have been arranged;
i. All required safety precautions must have been implemented.

3.3.4 Inspection Reports

TDs must provide a written report of their inspections to the IBU and the chairperson of the organizing committee immediately following the inspection. The reports should in particular address unresolved problems and unsatisfactory situations, and must also include the information in the following format:

a. Title name of the event, location, date(s) of inspection;
b. Inspection party: names and roles of persons who participated in the inspection;
c. Inspection routine: meetings, venue inspections;
d. Site and venue description: general location and character of the site, description of the venue course, stadium, shooting range, etc.;
e. Organizing committee: general structure, numbers of appointed officials, relevant training and qualifications;
f. Hosting arrangements: accommodation, meals, transport, ceremonies, social events, media, costs;
g. Problem areas;
h. Conclusion – general summary.

3.4 TD Tasks at Events

TDs must perform the following tasks at events:

3.4.1 Tasks Prior to Events

TDs must arrive in due time before the start of the official training to check whether the competition venue meets all requirements for training and competition and to ascertain where changes are required. They must make immediate contact with the organizing committee to ensure that:

a. team captains' meetings and draws are prepared;
b. arrangements for the assembly of the juries have been made;
c. the registrations of the participating nations were received in time;
d. corresponding plans for the reception of the teams are ready;
e. the costs for the teams are the same as those stated in the application to host the event.

3.4.2 Duties During Events

3.4.2.1 General

The TD must work closely with the Competition Chief during the event and each competition, ensuring that all operations are conducted correctly, without incidents and in accordance with the IBU Event and Competition Rules and other pertinent IBU regulations.

3.4.2.2 Meetings

The TD must take part in all the meetings of the organizing committee, the team captains' and the competition juries, as well as at all draws.

3.4.2.3 Responsibility to IBU Referees

The TD must keep IBU Referees briefed on the current situation and engage in their activities in a directing and coordinating manner.

3.4.2.4 IBU Race Director

The TD assists the IBU Race Director.

3.4.3 Tasks Prior to Competitions

3.4.3.1 TV Zones

The TD must assist the IBU Race Director and TV advisor to establish TV zones in consultation with TV representatives, IBU Referee Course and the OCs, including location, size, required fencing and enforcement methods and personnel.

3.4.3.2 Information Channels

The TD must hold a meeting with the IBU Referees to brief the IBU Referees on the plans for the competition and the telecommunications available during the competition, and to assign duties. This meeting can also be combined with the meeting that is held by the Competition Chief with the chief staff prior to each competition.

3.4.3.3 Inspections

The TD must make a general inspection of the venue.

3.4.3.4 Reports

The TD must obtain status reports from the IBU Referees and the Competition Chief.

3.4.3.5 Competition Jury Meeting

The TD must hold a meeting of the Competition Jury one hour before the first start to determine if conditions are suitable for the competition. The TD must obtain reports from the IBU Referees about their areas of operation and from the Competition Chief prior to this meeting.

3.4.4 Tasks During Competitions

3.4.4.1 General

The TD must oversee and coordinate the work of the Competition Chief and the IBU Referees, receive reports on the progress of the competition and take remedial actions as necessary.

3.4.4.2 Competition Jury Meetings

The TD must convene meetings of the Competition Jury as required.

3.4.5 Tasks After Competitions

3.4.5.1 Last Finish

With the Competition Chief, the TD must direct and coordinate the critical phase that starts immediately after the last finish.

3.4.5.2 Provisional/Final Results

The TD must confirm the correctness of the provisional/final results, sign the result lists and authorize their posting, and record the time of posting on the results.

3.4.5.3 Flower Ceremony

TDs will authorize the conduct of the unofficial awards ceremony when they are satisfied that the first necessary placings have been confirmed. It must be noted that the results may subsequently be contested and that the unofficial ceremony will be held at the OC's own risk.

3.4.5.4 Event Points

The TD must ensure that the OC/Timing Service Provider calculates the WC, Nations Cup or other applicable event points correctly.

3.4.5.5 Evaluation

The TD must hold a competition evaluation meeting with the Competition Chief, the chief staff and the IBU Referees.

3.4.6 Tasks after the Event

3.4.6.1 WC Points

The TD must ensure that the lists of WC, Nations Cup or any other event points are sent immediately to the next host of the WC or other event.

3.4.6.2 Event Evaluation

The TD must hold a meeting for all chief organizing committee staff and IBU Referees to evaluate the entire event.

3.4.6.3 Written Report

The TD must compile a written report about the event and send it to the IBU, to the event host and the chairperson of the organizing committee not later than ten days after the event. An IBU TD report form made for this purpose will be distributed by the chairperson of the TC Referee Sub-Committee to all TDs appointed for the coming season.

4. IBU REFEREES

4.1 General

The general regulations for the selection, appointment and work of IBU Referees are provided in the IBU Event and Competition Rules. This Annex supplements the general regulations by detailing specific duties of IBU Referees.

4.1.1 Principles of the IBU Referee Function

IBU Referees, like TDs, have the responsibility of being the technical representatives of the IBU at an event, in their area of responsibility and under the direction of the TD. Within their area of responsibility, all of the principles that apply to the TD function apply to IBU Referees, except being in the Competition Jury.

4.1.2 Notification of Appointment and Preparation

Shortly after being appointed for an event, IBU Referees will be notified of their appointment by the IBU. The IBU Referees will not be required to establish formal contact with the OC except for travel and accommodation arrangements. Once notified of their appointment, the IBU Referees must prepare so that they are fully conversant with the current IBU rules and regulations for their area of responsibility.

4.2 IBU Referee Duties at Events

IBU Referees will have the following duties at an event:

4.2.1 Duties Prior to Events

IBU Referees must arrive at the event site in time to prepare prior to the first official training; the IBU Referee Material Control must arrive in time for the preliminary inspection of equipment. On arrival, they must report to the TD to announce their presence and to receive briefings and directions. Then they must contact the chiefs from the organizing committee for their areas of responsibility, review arrangements, and inspect their areas. The checklist in the OC Guidelines should be used as a guide. If there are problems, they must be reported to the TD.

4.2.2 Tasks Prior to Competitions

In preparation for each competition, the IBU Referees must:

a. attend all team captains' meetings, any other meetings as directed by the TD and meetings held by the chiefs of their areas;

b. carry out a detailed inspection of their areas and check all plans using the checklist to ensure they are in accordance with the Rules, and direct corrections to be made as necessary;

c. remain in their areas to oversee preparations and activities;

d. report to the TD when their areas are ready for the competition;

e. carry out other tasks as directed by the TD.

4.2.3 Tasks During Competitions

During each competition the IBU Referees must:

a. remain in their areas to supervise all activities to ensure the correct and orderly conduct of the part of the competition that is their responsibility;

b. intervene to stop an error from being made;

c. assist and advise the organizing committee officials, if required;

d. ensure all safety precautions are being adhered to;

e. report to the TD when significant occurrences take place such as first start, last start, first shooter on the range, last shooter on the range, first finish, etc., and if any unusual incident occurs such as an injury, etc.;

f. observe violations of the Rules and report them to the TD;

g. carry out any other tasks as directed by the TD.

4.2.4 Tasks After Competitions

At the end of each competition IBU Referees must:

a. report to the TD that all is clear for their area, or report the problems that have occurred and have not been previously reported; these reports must be made immediately if possible, in order to assist the speedy posting of the provisional results and the conduct of the unofficial awards ceremony;

b. report to the Competition Jury about the circumstances of penalties, when so directed;

c. hold a short evaluation meeting about the competition for the chief and supervisors of the respective area.

4.3 IBU Referee Authority, Responsibilities and Organizational Relationships

4.3.1 Authority

IBU Referees are responsible and subordinate to the TD for the appropriate preparations and the correct and orderly conduct of competitions in their areas of responsibility. IBU Referees will not be in charge of the conduct of activities in their areas, but will be responsible for ensuring that all routines are correct. They must maintain close contact with the chiefs of their areas during the entire event in order to fulfill their tasks.

4.3.2 Specific Areas of Responsibility

The specific areas of responsibility for IBU Referees within their general areas are as follows:

a. IBU Referee Course: all course matters including configurations of loops, technical specifications, grooming, signage and fencing, inspection and checkpoints, access control, TV zones layout and their enforcement, forerunners, communications, safety and first aid arrangements;

b. IBU Referee Range: all range matters including layout and configurations, specifications, targets and their operation, penalty loop, coaches enclosure, signage and numbering, lane markings, wind flags, rifle racks, grooming, scoring, control procedures, telecommunications and safety;

c. IBU Referee Start/Finish: all start/finish area matters and timing systems including layout, configurations, specifications, relay hand-over zone, start clock and course sequence board, photo-finish camera for pursuit, mass start, super sprint final and relay competitions, acting as the photo-finish judge, and finish video camera for all competitions, warm-up area, storage areas for competitors' clothing, grooming, signage and fencing, traffic flow and control, start and finish procedures, telecommunications, timing procedures and equipment as well as safety;

d. IBU Referee Material Control: all equipment/materials inspection matters including timings, inspection equipment, preliminary equipment/materials inspection, start and finish inspection layouts (in consultation with IBU Referee Start/Finish), inspection procedures, traffic flow and control, telecommunications and safety.

4.3.3 Organizational Relationships

The primary relationships for IBU Referees with the organizing committee (direct liaison) will be as follows:

a. IBU Referee Course – Chief of Course;
b. IBU Referee Range – Chief of Range;
c. IBU Referee Start/Finish – Chief of Stadium/Timing;
d. IBU Referee Material Control – OC Material Control Supervisors.

ANNEX C TRAINING AND LICENSING OF TECHNICAL DELEGATES AND INTERNATIONAL REFEREES

TABLE OF CONTENTS

1. **General** 31
2. **Selection, Training and Testing** 33
3. **Licensing** 36
4. **Qualification and Appointment Badges** 38
5. **Employment of TDs and IBU Referees** 39
6. **Financial Matters** 40

1. GENERAL

The IBU has a training, licensing and employment system for technical officials in order to ensure that all IBU officials working at IBU events perform their duties effectively and correctly, with a common training standard. The Rules direct the appointment and duties of technical officials (TDs and IBU Referees) for IBU events. This Annex details the training, testing, licensing and employment conditions for technical officials.

1.1 Jurisdiction

All aspects of selection, training, testing and licensing of biathlon technical officials at international level is to be under the jurisdiction of the IBU TC. The TC member in charge of referees will be responsible for implementation and administration of the system applying to officials.

1.1.1 Liaison

NFs may discuss matters concerning technical officials directly with the chairperson of the Referees or the IBU. NFs will be requested to appoint a contact person within their area responsible for technical officials and to provide the TC member in charge of referees with the contact information for that person.

1.2 Qualification Levels

There are two levels of qualification for IBU technical officials:

a. Technical Delegate (TD);

b. International Referee (IR).

1.2.1 Intended Roles of TDs and IRs

Officials will be trained and licensed for the following purposes:

1.2.1.1 TDs

The TD qualification is primarily intended to train an official to function as a TD at IBU events. Persons qualified to be a TD may also fulfill any IR function at IBU events and may hold positions corresponding to those of an IR in an organizing committee.

1.2.1.2 IRs

The purpose of the IR qualification is to train and certify officials who can function in IR positions at IBU

events and who can hold designated IBU Referee positions in organizing committees. As well, the certified IRs will form the pool of qualified persons from which candidates will be selected for further training for the TD qualification.

1.3 Eligibility for Appointment

In order to be eligible for appointment to function as a TD or IBU Referee at IBU events, officials must hold the necessary qualification and the required valid license for the position.

1.4 Terminology

It must be noted that the terms TD and IBU Referee are the names of both the levels of qualification and the position titles when appointed for an IBU event. Should confusion arise in the use of the terms for both purposes in one context, the qualification terms will be indicated as TD (Q) and IR (Q).

1.5 Age Limits

The following age limits will apply for the certification and employment of TDs and IRs:

1.5.1 TDs

1.5.1.1 TD Test

Persons wishing to sit the TD qualification test must be not older than 55 years of age.

1.5.1.2 Assignment of Function of TD at an IBU Event

Persons may not be assigned the function of TD at an IBU event if they are older than 65 years of age, unless granted an exemption of maximum two years by the IBU TC.

1.5.2 IBU Referees

1.5.2.1 International Referee Test

Persons wishing to sit the IR qualification test must be not older than 60 years of age.

1.5.2.2 Assignment as IBU Referee at an IBU Event

Persons may not be assigned as an IBU Referee at an IBU event if they are older than 65 years of age, unless granted an exemption of maximum two years by the IBU TC. Additionally, an Organizing Committee may assign persons over this age for the functions which require an IBU Referee License.

2. SELECTION, TRAINING AND TESTING

Selection, training and testing of candidates for TD and International Referee qualification will be done as follows:

2.1 Selection Procedure for Certification

2.1.1 TDs

Candidates for TD qualification will be selected by the IBU TC from among the qualified IRs, based on observed performance. However, NFs may nominate suitable IRs as candidates for consideration by the TC.

2.1.1.1 TD Prerequisites

a. Candidates must have clearly proven his/her suitability as an IR and must be able to function in a senior leadership role in conditions of extreme stress and in view of the fact that an error could have the highest level of consequences. In addition, they must be capable of negotiating and liaising successfully with senior members of organizing committees, representatives of the media and with dignitaries;

b. The candidate must have and have held a valid IBU IR license for at least two years and must have officiated in at least four international events during the past four years;

c. The candidate must have basic verbal communication skills in English;

d. Notwithstanding any other provision in the IBU Event and Competition Rules or in these Annexes to the IBU Event and Competition Rules, no one may be or may remain a Technical Delegate unless they are Eligible (as defined in the Constitution). IBU will ensure that all TD candidates are vetted by the Vetting Panel to determine their Eligibility and will not be permitted to take the TD exam unless and until the Vetting Panel has determined that they are Eligible.

2.1.1.2 TD Quota

Candidates will be selected for TD training and certification in sufficient numbers to maintain the required number of TDs within the TD Group and the necessary reserves as determined by the TC.

2.1.2 IRs

2.1.2.1 IR Applications

Candidates will be selected for training and licensing as International Referees based on a nomination by their NF, in writing, to the TC member in charge of referees. Candidates' individual applications must be sent by the deadline date given in the seminar invitation. Applications must include the following information:

a. full name, date and place of birth, gender, nationality, full residence, address, phones, fax, e-mail address;

b. mother tongue and command of other languages;

c. language in which the test is to be held;

d. seminar location and dates;

e. length and type of experience as a national referee.

2.1.2.2 IR Requirements

All candidates must meet the applicable prerequisites for IRs. NFs will be required to screen their nominations with regard to general suitability and prerequisites, and to confirm in their nominations that the person meets all necessary criteria. Final acceptance of a candidate into the program will then be decided by the IBU TC.

2.1.2.3 IR Prerequisites

a. The candidate must be able to perform very responsible duties with a high consequence of error under stressful circumstances, in winter outdoor conditions, for long periods of time. The candidate must have sufficient skills in cross-country skiing to be able to ski on the competition course as necessary;
b. It is highly recommended that the candidate has held a valid national referee license for at least two years, has officiated in at national events and/or has significant other relevant biathlon experience as confirmed by his/her NF;
c. The candidate´s NF has to confirm that the candidate has been successfully vetted for ethical integrity before being approved to take the IR exam;
d. Notwithstanding Art. 2.1.2.3 c, IBU may at any time ask the Vetting Panel to determine the Eligibility (as defined in the Constitution) of such candidate. If the Vetting Panel determines that such candidate is not Eligible, he/she will not be allowed to become an IR.

2.1.2.4 IR Quota

There is no set limit for the numbers of IRs.

2.1.3 The TD Group

The composition of the TD Group will be established by the TC and will consist of 40 or more qualified TDs with the applicable licenses. All TDs appointed for IBU events must be from the TD Group. There should be at least one TD from every continent in the TD Group.

2.2 Training

2.2.1 General

Training of TDs and IRs will be conducted at seminars instructed by members of the IBU TC. Seminars will be held in various regions of the world, according to requirement. The scheduling of the seminars will be decided by the IBU EB based on the recommendations of the TC. TD seminars will be held at least once every two years.

2.2.2 Seminar Specifications

The following specifications will apply to TD and IR seminars:

2.2.2.1 TD Seminars

a. Duration – app. 2 days, as fixed by the IBU TC;
b. Candidates – no fixed number, to be decided by the IBU TC;
c. Instructors – IBU Race Directors, TC member in charge of referees or any other TC member;
d. Language – English and/or German or Russian with translation as required.

2.2.2.2 IR Seminars

IR Seminars must be requested by April 15 for action by the TC at the spring meeting or by September 15 for the TC fall meeting.

a. Duration – 18 hours, including the test;
b. Candidates – maximum 25, minimum 5;
c. Instructors – one member of the TC appointed by the IBU TC member in charge of referees;
d. Language – as required.

2.2.3 Attendance of Observers

The TC may authorize the attendance of observers at IR seminars. These persons will normally be national referees who will not sit for any test, or qualified IBU Referees who are doing refresher training for themselves, or other interested persons.

2.2.4 NF Sponsored Seminars

A seminar with a test may be held at the request of a NF if there are a sufficient number of eligible candidates, and the NF(s) will pay all costs for instructors provided by the IBU and the seminar. The final decision for the approval of such a seminar will rest with the IBU TC.

2.2.5 Seminar Content

The TD and IR seminars will be held in accordance with a standardized seminar training plan established by the TC for them and which will include:

a. General information about the biathlon TD and IR system, the IBU, definitions, history;
b. Classes of competitors and types of competitions, competitor qualification entries;
c. Organizations and duties: organizing and competition committees, juries, TDs, IBU Referees;
d. Preparations for competitions: training, team captains' meetings, draws, venue preparations, equipment checks, zeroing;
e. Implementation of competition Rules: use of the Rules and regulations, equipment and measuring devices, advertising, start, skiing, shooting, finish, penalties and protests;
f. Competition activity: supervising officials, monitoring competition activity, timing, forms, results, communications and reports;
g. Case studies (Competition Jury cases, etc.) – at TD seminars only;
h. Test.

2.3 Testing

All TD and IR candidates must successfully complete a written test and/or oral examination in order to become a qualified TD or IR. The test will be conducted in conjunction with TD and IR seminars; in exceptional circumstances, the TC may set other test dates. The TC may authorize IR candidates to be tested without an IR seminar.

2.3.1 Test Formats

Test Formats will be formulated by the TC member in charge of referees. The candidates will be asked questions that will test skills required by TDs and IRs for conducting their duties. Tests must be done without the use of any reference material. The following test specifications will apply:

a. Questions – up to 100 questions for the TD exam and 75 questions for the IR exam;
b. Allowed time – TD: 120 minutes; IR: 75 minutes;
c. Pass Grade – if 80 % of the maximum achievable score is reached.

Such tests can also be conducted as digital tests as soon as the TC confirms that a respective format can cover all requirements.

2.3.2 Scoring of Tests

Tests will be marked according to the standard marking guide established by the TC.

2.3.3 Supplementary Questions

The TC may direct that supplementary questions are to be answered during the test.

2.3.4 Test Languages

The only official language for exams is English.

3. LICENSING

3.1 Recognition of Qualification

Following attendance at a seminar and completion of the test to the required standard, successful TD and IR candidates will be reported to the next meeting of the IBU TC. If no other circumstances exist as grounds for denial, the TC will appoint all persons who have passed the seminar and test TD or IR, respectively.

3.2 Issue, Format, Validity and Conditions for Licenses

3.2.1 Issue

Following approval by the TC, a license will be issued to a TD or IR and will be effective from the date of the issue.

3.2.2 Format

Licenses issued to IRs and TDs must contain the following information:

3.2.2.1 TD and IR

a. type of qualification – TD or IR;
b. full name, date of birth, gender, nationality;
c. period of validity and extensions;
d. photo of the holder, impressed with the IBU seal, (for TDs only);
e. signature of the chairperson of the TC or his/her appointee (for TDs only).

3.2.2.2 TD – Additional Information

a. record of employment at IBU events signed by the TD of the event – or the chairperson/competition chief of the organizing committee if the license holder served as the TD there – and must be stamped with the OC's seal;
b. qualification record – dates of qualification as IR and TD;
c. record of TD seminars attended;
d. biennial license validity stamp.

3.2.3 Periods of Validity

IR licenses are automatically renewed unless the respective NF notifies the IBU Headquarters that an IR is no longer active. TD licenses are valid for two years from the date of issue and may be renewed for further such periods without any other limit than the age, and as long as no factors exist as grounds for denying a renewal.

3.2.3.1 Renewal Process

TD licenses may be renewed after the expiry of their validity period. For this purpose, the NF of the official must submit a written request, accompanied by the license, to the TC member in charge of referees. Requests for renewal must be submitted by 31 May prior to expiry for TD licenses.

3.2.3.2 Biennial Validation of TD Licenses

NFs or TDs must send TD licenses for biennial validation to the TC member in charge of referees by 30 April of a given year. If all circumstances are in order, the license will be stamped in the biennial validation record and returned.

3.2.3.3 Retention of TD License

Even though a TD is no longer a member of the TD Group for reasons other than age, disciplinary reasons or incompetence, his/her license may be renewed and validated, as long as all other factors required for its validity are maintained.

3.2.4 Revoking a License

A license may be taken away from a TD and IR for disciplinary reasons or for other reasons having to do with that person. The process for revoking a license will be initiated by a corresponding recommendation by the TC member in charge of referees to the TC. After thoroughly investigating all circumstances relating to the case, the TC may recommend that the IBU EB revoke the license.

3.2.5 Nothing in the IBU Event and Competition Rules or in these Annexes to the IBU Event and Competition Rules prejudices or limits in any way the ability to revoke the license of a TD or IR where the Vetting Panel has determined that they are not Eligible (as defined in the Constitution).

4. QUALIFICATION AND APPOINTMENT BADGES

Distinctive qualification and appointment badges and markings will be issued to TDs and IRs. It is the right of every TD and IR with a valid license to wear the appropriate qualification badge at any time.

4.1 Qualification Badges

Badges of qualification will be issued to TDs and IRs at the same time as their licenses are granted, as follows:

4.1.1 TD

TDs will be issued a metal badge with the IBU Logo and the words “Technical Delegate” imprinted. Prior to issue, each badge will have a sequential issue number imprinted/engraved on it.

4.1.2 IR

IRs will be issued a metal badge with the IBU logo and the words “International Referee” imprinted. Each IR badge will also have an imprinted/engraved sequential issue number.

4.2 Appointment Markings

TDs and IBU Referees appointed to specific positions as TDs and IBU Referees at IBU events will be issued a distinctive marking to identify them as having responsibility for that position. The markings may be a badge, armband or item of clothing and must clearly indicate the bearer’s IBU TD or IR qualification, as appropriate. The IBU TC will periodically direct what types of marking will be used by what TDs and IBU Referees appointed for what IBU events.

5. EMPLOYMENT OF TDS AND IBU REFEREES

5.1 General

TDs and IBU Referees will be appointed for events by the IBU TC based on the recommendation of the TC member in charge of referees (in consultation with the IBU HQ). TDs for events not under IBU jurisdiction will be appointed only if requested by the responsible body for the event.

5.1.1 New TD Employment

Newly-qualified TDs may be employed only as IBU Referees at IBU events during the first two years after their qualification. The TC may authorize exceptions to this restriction if circumstances so demand.

5.2 Employment Guidelines

Appointment of TDs and IBU Referees is to be based on the principle of utilizing the best and the most experienced officials for each event while at the same time providing development opportunities for less experienced officials. Factors such as language capability and travel costs must be considered as well. As many different officials as possible should be employed on an alternating basis.

5.2.1 OWG Preparation

Senior officials of the Organizing Committee for the next OWG, such as the Competition Chief, Chiefs of Course, Range and Timing, should be considered as candidates for TDs and IBU Referees at a preceding WCH, if appropriate and possible.

5.2.2 Regulations for the Employment of Officials

The TC will appoint the TDs and IBU Referees from among its members and the TD group for the following IBU events:

a. OWG – 2 TDs, 8 IBU Referees;
b. WCH – TD, 4 IBU Referees;
c. JWCH – TD, 4 IBU Referees;
d. WC – TD, 4 IBU Referees;
e. OECH – TD, 4 IBU Referees;
f. IBU Cup – TD, 4 IBU Referees;
g. Junior Cup/JOECH – TD, 4 IBU Referees;
h. Other CCH – TD from NF;
i. Other CC/Regional Cup – TD from NF;
j. SB WCH - TD, 4 IBU Referees;
k. YOG, CISM, University Games, Continental Games, EYOF – TD, 4 IBU Referees from NF.

6. FINANCIAL MATTERS

6.1 TD and IBU Referee Expenses

TDs and IBU Referees will receive a daily allowance for each travel and workday arising from IBU duties, and reimbursement of travel expenses, in accordance with the current IBU Rules for Travel Expenses.

6.2 Financial Conditions for Seminars and Testing

Financial remuneration for TDs and IBU Referees holding seminars and tests will be directed by the IBU EB.

ANNEX D COMPETITION RULES SUMMER BIATHLON

TABLE OF CONTENTS

1. **General Regulations** 41
2. **Roller Ski Biathlon** 42
3. **Cross Biathlon** 44
4. **Mountain Bike Biathlon** 47

1. GENERAL REGULATIONS

1.1 Disciplines of Summer Biathlon

Summer Biathlon can be carried out in the following disciplines:

a. cross-country running with shooting (cross biathlon);

b. roller-skiing competitions with shooting (roller biathlon);

c. mountain bike cycling with shooting (mountain bike biathlon).

1.2 Competition Program for Summer Biathlon

a. WCH (Roller Ski)

b. Other authorized IBU Biathlon Events (Roller Ski)

1.3 Applicable Rules

The IBU Event and Competition Rules will apply to the conduct and set up for the summer biathlon competitions and venues with the exception of the regulations contained in the following Annex. An IBU B License is required to host the SB WCH.

1.4 Registration and Entry

Each NF may register a maximum of eight men and women each, and eight junior men and junior women each in the SB WCH. A maximum of six competitors per NF and per category may be enetred for the Sprint and Super Sprint competitions.

2. ROLLER SKI BIATHLON

2.1 Definition

Roller skiing with small-bore shooting (roller biathlon) is a form of summer biathlon which is conducted in a similar fashion to winter biathlon.

2.2 Roller Biathlon Specific Competition Rules

2.2.1 Rule Specifications

The competitions may only be carried out with roller skis of the same type and model. The IBU will define the type and model of roller skis for SB WCH and will provide such roller skis and bindings. Rifles must be carried on the course during competition. Competitors must bring their own rifle, ski boots, ski poles and helmets. Helmets must meet one of the international safety standards (e.g. DIN EN 1078 or equivalent). Such helmets must be fixed and correctly worn at all types of training and competition and must not be modified. Exception: helmets can be removed or the fixation strap can be opened only during the time on the shooting mat.

2.2.2 Competition Specifications

a. SB WCH will be conducted according to the following table. Any changes must be authorized by the IBU EB.

b. Authorized IBU Biathlon Events (Roller Ski) will be conducted according to the Article 2.5.

Column 1 Class of Competitor: according to these Rules. **Column 2** Type of Competition: according to these Rules. **Column 3** Competition Distance. **Column 4** Start Types and Intervals: the method by which the start is made and the interval between the starts of two consecutive competitors. **Column 5** Number of Ski Loops: course rounds to be skied by the competitor. **Column 6** Length of single loop used for competition. **Column 7** Shooting Bouts: the number of shooting bouts the competitor must do and the shooting position to be used in the bout (P = Prone, S = Standing), the number of rounds the competitor must fire in each bout. **Column 8** Shot Penalties: automatic shot-penalty - 1 minute / 45 seconds of added time or a 150 m / 75 m penalty loop - imposed on a competitor for each target left standing after all rounds for the bout have been fired. **Column 9** Minimum Total Climb (tc): the (minimum required) total vertical ascent in the competition (the sum of all the ascents) for each competitor. **Column 10** Maximum Total Climb (tc): the (maximum allowed) total vertical ascent in the competition (the sum of all the ascents) for each competitor. **Column 11** Loop Minimum Total Climb (tc): the (minimum required) total vertical ascent for one loop in the competition (the sum of all the ascents) for each competitor. **Column 12** Loop Maximum Total Climb (tc): the (maximum allowed) total vertical ascent for one loop in the competition (the sum of all the ascents) for each competitor.

Notes to Table *Height Difference (hd): the maximum permitted difference in altitude between the highest and lowest points on the competition course is 80 m for all competitions. Maximum climb (mc): the maximum permitted height difference of an ascent, without either a flat part or a descent of at least 200 m in length, is 50 m for all competitions. Maximum grade (mg): the maximum grade of all climbs on the course must not exceed 25 percent.*

1.	2.	3.	4.	5.	6.	7.	8.	9.		10.		11.	12.
	Competition Format	Competition Distance (m)	Standard Start Types and Intervals	Number of skiing loops	Length of the Loop (m)	Shooting sequences 5 rounds per bout, plus 3 spare rounds for Relays	Penalty for missed shot	Minimum Total Climb per Competition (m)		Maximum Total Climb per Competition (m)		Minimum Total Climb per Loop (m)	Maximum Total Climb per Loop (m)
								2019	Old*	2019	Old*		
MEN	SUPER SPRINT QUALIFICATION	4,500	Single, 15 sec	3	1,500	P - S	75 m	90	75	180	180	30	60
	SUPER SPRINT FINAL	7,500	Simultaneous	5	1,500	P - P - S - S	75 m	150	125	300	300	30	60
	SPRINT	7,500	Single, 30 sec	3	2,500	P - S	150 m	225	200	300	300	75	100
	PURSUIT	10,000	Pursuit -50%	5	2,000	P - P -S - S	75 m	275	250	400	250	55	80
	MASS START 30	12,500	Simultaneous	5	2,500	P - P -S - S	150 m	375	350	500	500	75	100
WOMEN	SUPER SPRINT QUALIFICATION	4,500	Single, 15 sec	3	1,500	P - S	75 m	90	75	180	180	30	60
	SUPER SPRINT FINAL	7,500	Simultaneous	5	1,500	P - P - S - S	75 m	150	125	300	300	30	60
	SPRINT	6,000	Single, 30 sec	3	2,000	P - S	150 m	180	150	240	250	60	80
	PURSUIT	7,500	Pursuit -50%	5	1,500	P - P - S - S	75 m	150	100	300	240	30	60
	MASS START 30	10,000	Simultaneous	5	2,000	P - P -S - S	150 m	275	150	400	250	55	80
JUNIOR MEN	SUPER SPRINT QUALIFICATION	4,500	Single, 15 sec	3	1,500	P - S	75 m	90	75	180	180	30	60
	SUPER SPRINT FINAL	7,500	Simultaneous	5	1,500	P - P - S - S	75 m	150	125	300	300	30	60
	SPRINT	7,500	Single, 30 sec	3	2,500	P - S	150 m	225	200	300	300	75	100
	PURSUIT	10,000	Pursuit -50%	5	2,000	P - P -S - S	75 m	275	250	400	250	55	80
	MASS START 30	12,500	Simultaneous	5	2,500	P - P -S - S	150 m	375	350	500	500	75	100
JUNIOR WOMEN	SUPER SPRINT QUALIFICATION	4,500	Single, 15 sec	3	1,500	P - S	75 m	90	75	180	180	30	60
	SUPER SPRINT FINAL	7,500	Simultaneous	5	1,500	P - P - S - S	75 m	150	125	300	300	30	60
	SPRINT	6,000	Single, 30 sec	3	2,000	P - S	150 m	180	150	240	250	60	80
	PURSUIT	7,500	Pursuit -50%	5	1,500	P - P - S - S	75 m	150	100	300	240	30	60
	MASS START 30	10,000	Simultaneous	5	2,000	P - P -S - S	150 m	275	150	400	250	55	80

* For venues with licensed courses (valid at cut-off date: October 15th 2019) the old values are still accepted until the courses are changed/renewed on site.

2.2.3 Inspection of Equipment/Clothing

RD/TD and the OCs are to provide a technical inspection of all roller skis. Roller skis will be inspected after the official training, before the start and after the finish of the competitions. The inspection will check the model, the type and the speed of the roller skis. The participants will get their roller skis with an approval marking immediately before the start.

2.3 Competition Venues for SB WCH

2.3.1 Start and Finish Areas

The start area for single starts must have a straight start line at right angles (90°) to the skiing direction. The start line for group or simultaneous starts must be placed so that the competitors have to ski the same distance. The 50 m before the finish line should be straight and flat, and be divided up into three lanes marked with a white-colored line. The 50 m after the finish line must be straight and flat as well.

2.3.2 Courses

The minimum width of the course will be 3.5 m or more. Downhill parts and curves must be laid in such a way that the competitors are able to move on them at full speed without risk of an accident.

2.3.3 Shooting Range

Winter biathlon regulations apply to the construction of shooting ranges.

2.3.4 Penalty Loop

A paved penalty loop with a minimum width of 3.5 m must be provided. A wider loop for several competition formats may be needed. Depending on the competition format, the length may vary between 150 m (+/-5 m) and 75 m (+/-5 m).

2.4 Shooting Regulations

All regulations valid for winter biathlon must be applied to roller biathlon but competitors are required to stand with both feet/roller skis on the mats.

2.5 Authorized IBU Summer Biathlon Events

Any additions regarding the IBU Event and Competition Rules and specifications for the conduct of IBU Summer Biathlon Events will be agreed separately between the IBU and the Organizers, and all competitors will be informed in advance in the Event Invitation.

3. CROSS BIATHLON

3.1 Definition

Cross biathlon is conducted in the combination of cross-country running and small-bore shooting. Rifles are not carried by the athletes but left at the shooting range.

3.2 Cross Biathlon Specifications

3.2.1 Rules Specifications

All competitors will be permitted to finish the competition.

All athletes are responsible for picking up their rifles before shooting and to leave them at the assigned rifle rack after shooting. Competitors must deposit their rifles in the racks not later than five minutes before the first start, and will not be permitted to start if they have not done so. Rifles must not be removed from the racks until the entire competition is finished and all of the rifles have been inspected by the IBU Referee.

3.2.2 Competition Specifications

Cross biathlon will be conducted according to the following table:

	Course Length and Competition Type	Shooting Bouts 5 Rounds per Bout except Relay	Shot Penalty
MEN	**7 km INDIVIDUAL**	P, S, P, S	30 seconds
	4 km SPRINT	P, S	70 m penalty loop
	6 km PURSUIT	P, P, S, S	70 m penalty loop
	6 km MASS START	P, P, S, S	70 m penalty loop
	4 x 4 km RELAY	P, S (each) + 3 spare rounds per bout	70 m penalty loop
WOMEN	**6 km INDIVIDUAL**	P, S, P, S	30 seconds
	3 km SPRINT	P, S	70 m penalty loop
	5 km PURSUIT	P, P, S, S	70 m penalty loop
	5 km MASS START	P, P, S, S	70 m penalty loop
	4 x 3 km RELAY	P, S (each) + 3 spare rounds per bout	70 m penalty loop
MEN/WOMEN	**2 x 3 km + 2 x 4 km MIXED RELAY**	P, S (each) + 3 spare rounds per bout	70 m penalty loop
JUNIOR MEN	**7 km INDIVIDUAL**	P, S, P, S	30 seconds
	4 km SPRINT	P, S	70 m penalty loop
	6 km PURSUIT	P, P, S, S	70 m penalty loop
	6 km MASS START	P, P, S, S	70 m penalty loop
	3 x 4 km RELAY	P, S (each) + 3 spare rounds per bout	70 m penalty loop
JUNIOR WOMEN	**6 km INDIVIDUAL**	P, S, P, S	30 seconds
	3 km SPRINT	P, S	70 m penalty loop
	5 km PURSUIT	P, P, S, S	70 m penalty loop
	5 km MASS START	P, P, S, S	70 m penalty loop
	3 x 3 km RELAY	P, S (each) + 3 spare rounds per bout	70 m penalty loop
JUNIOR MEN/WOMEN	**2 x 3 km + 2 x 4 km MIXED RELAY**	P, S (each) + 3 spare rounds per bout	70 m penalty loop

Total climb

For the 1,0 km course – total climb per loop:	15-35 m
For the 1,2 km course – total climb per loop:	20-40 m
For the 1,3 km course – total climb per loop:	25-40 m
For the 1,4 km course – total climb per loop:	30-50 m
Maximum height difference	30 m
Maximum climb	25 m

3.2.3 The Pursuit start can be performed with a fixed start interval of 10 seconds.

3.3 Competition Venues

In general, competition venues for cross biathlon will be set up based on the rules applicable to winter biathlon events, however giving appropriate consideration to the differences present in competitions held in the summer. The venues may be modified with the approval of the RD/TD.

3.3.1 Course

Courses must be of a minimum width of 3 m. The course must be surfaced with grass, sawdust, asphalt or cinder and must be free of any obstacles or bumps. All parts of the course must be safe for the competitors to run along at full speed.

3.3.2 Marking of the Course

The course must be clearly marked and fenced off along its entire length.

3.3.3 Start and Finish Zones

The start and finish zones must be flat and at least 5 m wide. The course after the start and the course before the finish must be straight for at least 50 m. Lanes for the relay and mass start starting area must be at least 1 m wide and 30 m long.

3.3.4 Shooting Range

The shooting range will be constructed in accordance with the IBU Event and Competition Rules. Competitors may stand on the mats or on the bare ground in the standing shooting position. Lifting the mats is not permitted.

3.3.4.1 Rifle Racks

An adequate number of rifle racks, as stipulated by the RD/TD, must be marked with the start numbers and located on the shooting range or close to it to give all competitors a place for their rifle while they are running. All racks must be located in the same distance from the shooting range. The racks must be wooden; the distance between the notches for holding the rifles must be at least 35 cm. The racks must be designed in such a way as to allow the competitors to deposit and remove their rifles easily, yet must prevent the rifles from falling out accidentally. The numbers must be a minimum of 10 cm in height and have a font line width of 1 cm.

3.3.5 Penalty Loop

The penalty loop must be 70 m (+ or - 5 m) in length.

4. MOUNTAIN BIKE BIATHLON

4.1 Definition

4.1.1 Mountain Bike Biathlon

is a summer sport combining mountain biking and small-bore rifle shooting.

4.2 Classes of Competitors

Men and Women

a. 15 - 20 years;
b. 21 - 30 years;
c. 31 - 40 years;
d. 41 + years.

4.3 Competitions

a. Men 9 km (3-3-3) with two shooting bouts (P, S);
b. Women 6 km (2-2-2) with two shooting bouts (P, S).

4.3.1 Qualification if Required by Large Entry Numbers

a. Men 6 km (2-2-2) with two shooting bouts (P, S);
b. Women 4.5 km (1.5-1.5-1.5) with two shooting bouts (P, S).

4.4 Draw of Start Numbers by Classes

Group draw in every class; maximum of four draw groups per class.

4.5 Competition Jury

a. 1 TD;
b. IBU International Referee;
c. 1 Competition Chief;
d. 2 Team Captains.

4.6 Competition Venue and Facilities

4.6.1 Start/Finish

a. Individual start with 60 seconds intervals;
b. Mass Start.

Finish zone minimum 6 m wide followed by a 10 x 30 m slow-down area.

4.6.2 Course

Minimum of two loops consisting of varying terrain.

4.6.3 Penalty Loop

A loop of mildly varying terrain, to provide a handicap of 30 seconds.

4.6.4 Shooting Range

As stated in the IBU Event and Competition Rules, with the addition of bike and rifle racks.

4.7 Competition Equipment and Clothing

Competition equipment and clothing must be in accordance with IBU and UCI rules.

Helmets must meet one of the international safety standards (e.g. DIN EN 1078 or equivalent). Such helmets must be fixed and correctly worn at all types of training and competition and must not be modified. Exception: helmets can be removed or the fixation strap can be opened only during the time on the shooting mat.

4.7.1 Inspection of Equipment and Clothing

Prior to the start and following the finish, equipment and clothing will be inspected by the IBU and UCI international referees.

4.8 Training and Zeroing

4.8.1 The day prior to the competition, competitors will have the opportunity to train on the competition course and range.

4.8.2 Zeroing will take place beginning one hour and ending 10 minutes prior to the start.

4.9 Shooting Regulations

After placing the bike in the rack provided, the competitor will retrieve his rifle from the rack, place the rifle on his back in the carrying position, proceed to the appropriate shooting lane (prone or standing), fire 5 rounds, replace the rifle on his back in the carrying position, return the rifle to the rack and resume the race on his mountain bike.

For each target missed, the athlete must complete one penalty loop.

4.10 Penalties

4.10.1 IBU and UCI rules will be applied where appropriate.

4.10.2 Disqualification

Competitors will be disqualified:

a. For not carrying their rifle on their back in the carrying position;

b. For violating safety regulations.

4.11 Ranking

Competitors will be ranked according to their time taken (to 1/10 second) to complete the course.