dipra
Ductile Iron Pipe
Research Association

Strength and **Durability** for **Life**®

DESIGN

Thrust Restraint Design for Ductile Iron Pipe

Seventh Edition

Last Revised:
May 2016

Foreword

Published in 1984, the first edition of Thrust Restraint Design for Ductile Iron Pipe presented suggested design procedures for the restraint of thrust forces in pressurized, buried Ductile Iron piping systems.

DIPRA's Technical Committee reviewed the 1984 edition and approved revisions to the suggested design procedures, which were incorporated in the second edition issued in 1986.

The second edition was reviewed by DIPRA's Technical Committee in 1988, resulting in only editorial revisions that were incorporated in the 1989 edition.

In 1991, DIPRA's Technical Committee reviewed the 1989 edition. This review incorporated pressure classes and 60- and 64-inch-diameter pipe. In addition, the following topics were addressed in the third edition issued in 1992:

1. Encroaching restrained lengths
2. Combining thrust blocks and restrained joints
3. Pipe in casings
4. Future excavations.

The third edition was reviewed in 1996. This review resulted in a clarification to the equation used for determining restrained length of a tee branch, as well as the addition of a section that addressed all combined vertical offsets. A clarification in the unit frictional force for standard asphaltic coated pipe vs. polyethylene encased pipe, with the addition of the "unit frictional resistance" term (F_f), was also included. The fourth edition was issued in 1997.

The fifth edition was issued in 2002. It included: 1) the addition of a cautionary note for the design of gravity thrust blocks when one leg is not horizontal; 2) the addition of well-graded gravels and gravel-sand mixtures to the table of soil parameters; 3) cautionary notes were added regarding how to analyze encroaching restrained joints whose bend angles approached 90º and; 4) the elimination of Appendix A (values for F_s, $(F_s)_b$, and R_s), and Appendix B (restrained joint design tables for horizontal bends). Appendices A and B were eliminated due to the extensive use of DIPRA's thrust restraint design program which is capable of generating the data contained therein. This program can be downloaded from DIPRA's website at www.dipra.org.

The fifth edition was reviewed in 2006, resulting in only editorial revisions and changes of format that were incorporated in the 2006 edition.

Conservative assumptions, along with an explicit safety factor, have been employed to assure a conservative design with an adequate overall safety factor. In order to facilitate the use of these suggested design procedures, soil types have been divided into broad categories with significantly different characteristics. Because actual soil conditions vary widely, however, anyone using this paper as a guide should conduct soil tests to ensure that the proper design parameters are chosen for the soil type present at the site of the pipeline project. For any given project, the ultimate responsibility for the proper use of the equations and other data provided in this paper rests with the design engineer. When using restrained joint pipe, consult the DIPRA member companies regarding proper installation procedures.

Table of Contents

Thrust Restraint 3
Thrust Force 4
Design Pressure 6
Pipe-soil Structure 6
Thrust Blocks 6
Restrained Joints 8
Horizontal Bends 9
Unit Frictional Force, F_s 10
Polyethylene Encasement 10
Unit Bearing Resistance, R_s 11
Vertical Down Bends 14
Vertical Up Bends 14
Tees 15
Reducers 16
Dead Ends 16
Encroaching Restrained Lengths 17
Equal Angle Vertical Offset 17
Combined Horizontal Equal Angle Bends 18
Combined Vertical Equal Angle Offsets 19
Restrained Length 20
Select Backfill Considerations 20
Combining Thrust Blocks and Restrained Joints 20
Pipe in a Casing 20
Future Excavations 20
Deflected Unrestrained Ductile Iron Pipe Joints 20
Computer Program 21
Restrained Length Calculation Procedure 21
Nomenclature 22
References 22

Tables

1. Horizontal Bearing Strengths 7
2. Dimensions and Unit Weights of Pipe and Water 12
3. Suggested Values for Soil Parameters and Reduction Constant, K_n 13
4. Soil Classification Chart 13

Figures

1. Push-on Joint 3
2. Internally Balanced Force 4
3. Thrust Force 4
4. Thrust Force for Various Configurations 5
5. Bearing Block 6
6. Gravity Thrust Block 8
7. Horizontal Bend /Vertical Up Bend 9
8. Unit Normal Forces on Pipe 10
9. Standard ANSI /AWWA C150/A21.50 Laying Conditions 12
10. Vertical Down Bends 14
11. Tees 15
12. Reducers 16
13. Dead Ends 16
14. Equal Angle Vertical Offset 17
15. Combined Horizontal Equal Angle Bends 18
16. Combined Vertical Equal Angle Offsets 19

Thrust Restraint

Ductile Iron Pipe and fittings are most often joined with push-on (Figure 1) or mechanical joints. Neither of these joints provides significant restraint against longitudinal separation other than the friction between the gasket and the plain end of the pipe or fitting. Tests have shown that this frictional resistance in the joint is unpredictable, varying widely with installation conditions and other factors that are insignificant in other respects. Thus, these joints should be considered as offering no longitudinal restraint for design purposes.

At many locations in an underground or aboveground pipeline, the configuration of the pipeline results in unbalanced forces of hydrostatic or hydrodynamic origin that, unless restrained, can result in joint separation.

Generically, these unbalanced hydrostatic and hydrodynamic forces are called **Thrust Forces**. In the range of pressures and fluid velocities found in waterworks or wastewater piping, the hydrodynamic thrust forces are generally insignificant in relation to the hydrostatic thrust forces and are usually ignored. Simply stated, thrust forces occur at any point in the piping system where the direction or cross-sectional area of the waterway changes. Thus, there will be thrust forces at bends, reducers, offsets, tees, wyes, dead ends, and valves.

Balancing thrust forces in underground pipelines is usually accomplished with bearing or gravity thrust blocks, restrained joint systems, or combinations of these methods. Presented herein is a general discussion of the nature of thrust forces as well as suggested approaches to the design of both thrust block and restrained joint systems for balancing these forces. The suggested design approaches are conservatively based on accepted principles of soil mechanics.

FIGURE 1

Push-on Joint

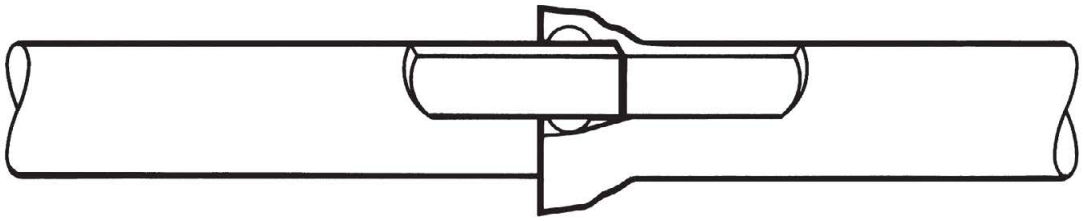

Thrust Force

The internal hydrostatic pressure acts perpendicularly on any plane with a force equal to the pressure (P) times the area (A) of the plane. All components of these forces acting radially within a pipe are balanced by circumferential tension in the wall of the pipe. Axial components acting on a plane perpendicular to the pipe through a straight section of the pipe are balanced internally by the force acting on each side of the plane (Figure 2).

Consider, however, the case of a bend as shown in Figure 3. The forces PA acting axially along each leg of the bend are not balanced. The vector sum of these forces is shown as T. This is the thrust force. In order to prevent separation of the joints, a reaction equal to and in the opposite direction of T must be established.

FIGURE 2

Internally Balanced Force

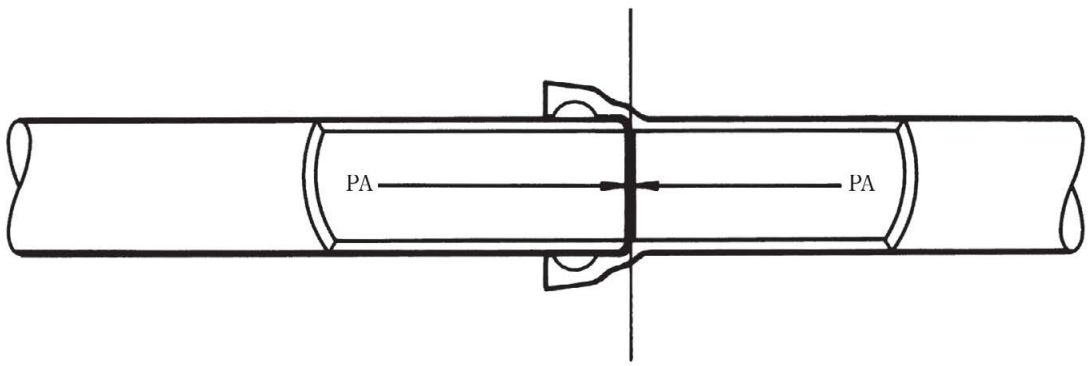

FIGURE 3

Thrust Force

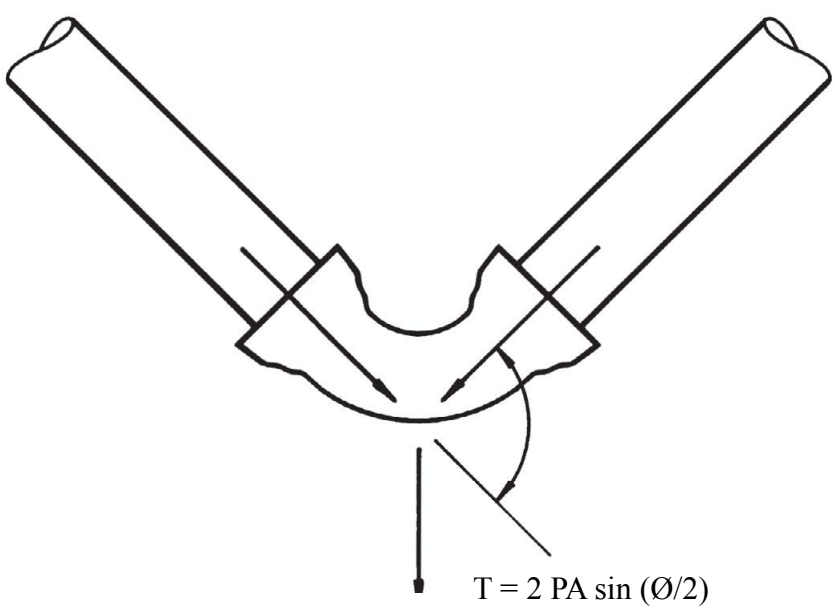

Figure 4 depicts the net thrust force at various other configurations. In each case the expression for T can be derived by the vector addition of the axial forces.

FIGURE 4

Thrust Force for Various Configurations

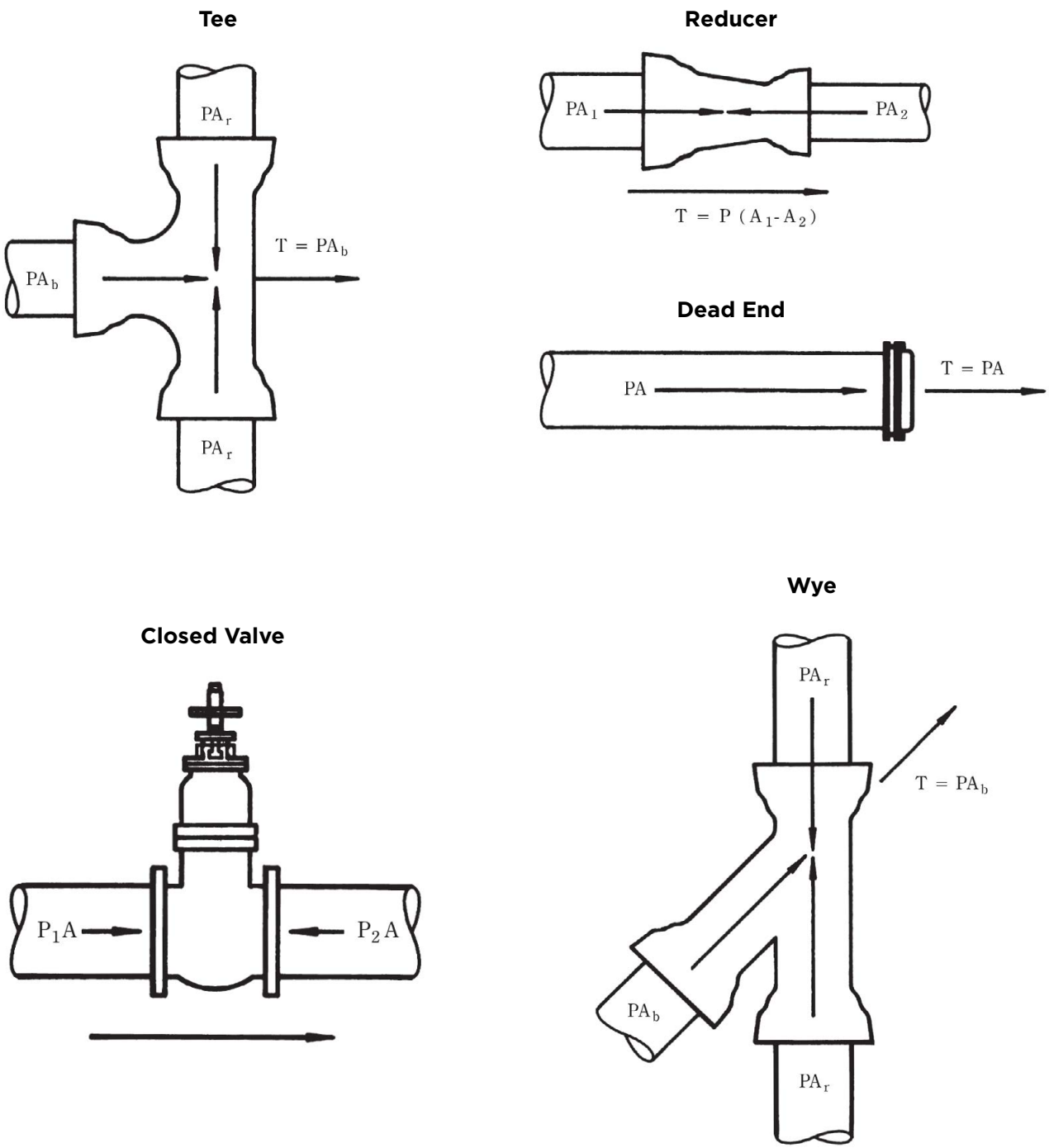

Design Pressure

The design pressure, P, is the maximum pressure to which the pipeline will be subjected, with consideration given to the vulnerability of the pipe-soil system when the pressure is expected to be applied. In most cases this will be the test pressure of the pipe, applied shortly after installation when the pipe-soil system is normally most vulnerable.

Pipe-soil Structure

For buried pipelines, thrust restraint is achieved by transferring the thrust force to the soil structure outside the pipe. The objective of the design is to distribute the thrust forces to the soil structure in such a manner that damage does not occur to the restrained pipe system and joint separation does not occur in unrestrained joints.

Thrust Blocks

One of the most common methods of providing resistance to thrust forces is the use of thrust blocks. Figure 5 depicts a typical bearing thrust block on a horizontal bend. Resistance is provided by transferring the thrust force to the soil through the larger bearing area of the block such that the resultant pressure against the soil does not exceed the horizontal bearing strength of the soil. Design of thrust blocks consists of determining the appropriate bearing area of the block for a particular set of conditions. The parameters involved in the design include pipe size, design pressure, angle of the bend (or configuration of the fitting involved), and the horizontal bearing strength of the soil.

FIGURE 5

Bearing Block

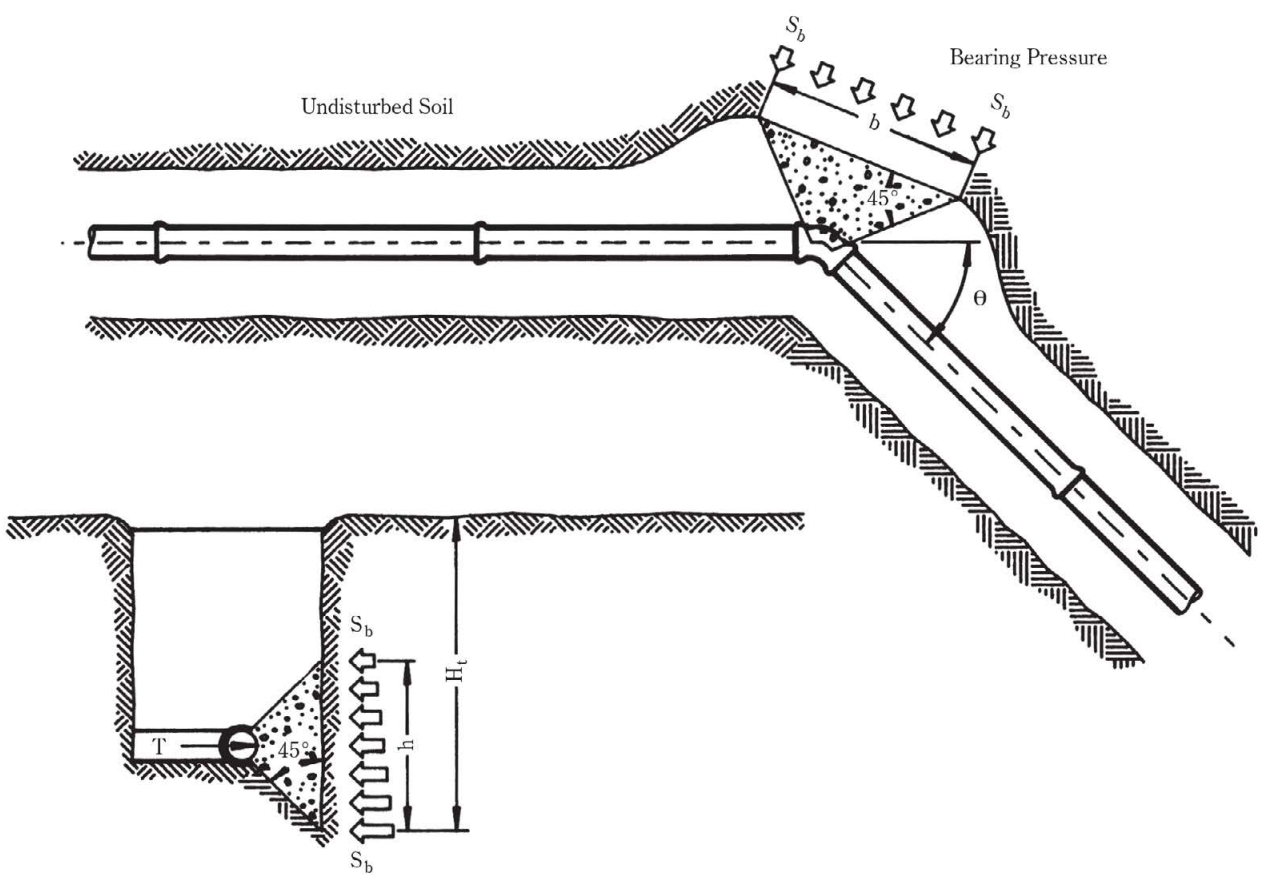

The following are general criteria for bearing block design.

—Bearing surface should, where possible, be placed against undisturbed soil. Where it is not possible, the fill between the bearing surface and undisturbed soil must be compacted to at least 90% Standard Proctor density.

—Block height (h) should be equal to or less than one-half the total depth to the bottom of the block, (H_t), but not less than the pipe diameter (D').

—Block height (h) should be chosen such that the calculated block width (b) varies between one and two times the height.

TABLE 1
Horizontal Bearing Strengths

Soil	*Bearing Strength S_b (lb/ft²)
Muck	0
Soft Clay	1,000
Silt	1,500
Sandy Silt	3,000
Sand	4,000
Sandy Clay	6,000
Hard Clay	9,000

*Although the above bearing strength values have been used successfully in the design of thrust blocks and are considered to be conservative, their accuracy is totally dependent on accurate soil identification and evaluation. The ultimate responsibility for selecting the proper bearing strength of a particular soil type must rest with the design engineer.

The required bearing block area is

$$A_b = hb = \frac{S_f T}{S_b}$$

Then, for a horizontal bend,

$$b = \frac{S_f\, 2\, PA \sin(\varnothing/2)}{h\, S_b} \quad (1)$$

where S_f is a safety factor (usually 1.5 for thrust block design). A similar approach may be used to design bearing blocks to resist the thrust forces at tees, dead ends, etc. Typical values for conservative horizontal bearing strengths of various soil types are listed in Table 1.

In lieu of the values for soil bearing strength shown in Table 1, a designer might choose to use calculated Rankine passive pressure (P_p) or other determination of soil bearing strength based on actual soil properties.

Gravity thrust blocks may be used to resist thrust at vertical down bends. In a gravity block, the weight of the block is the force providing equilibrium with the thrust force. The design problem is then to calculate the required volume of the thrust block of a known density. The vertical component of the thrust force in Figure 6 on page 8 is balanced by the weight of the block.

It can easily be shown that T_y=PA sin Ø. Then the required volume of the block is

$$V_g = \frac{S_f\, PA \sin \varnothing}{W_m} \quad (2)$$

where W_m=density of the block material. Here, the horizontal component of the thrust force

$$T_x = PA\,(1-\cos \varnothing)$$

must be resisted by the bearing of the right side of the block against the soil. Analysis of this aspect will follow like the above section on bearing blocks.

Calculations of V_g and T_x for orientations other than when one leg is horizontal should reflect that specific geometry.

FIGURE 6

Gravity Thrust Block

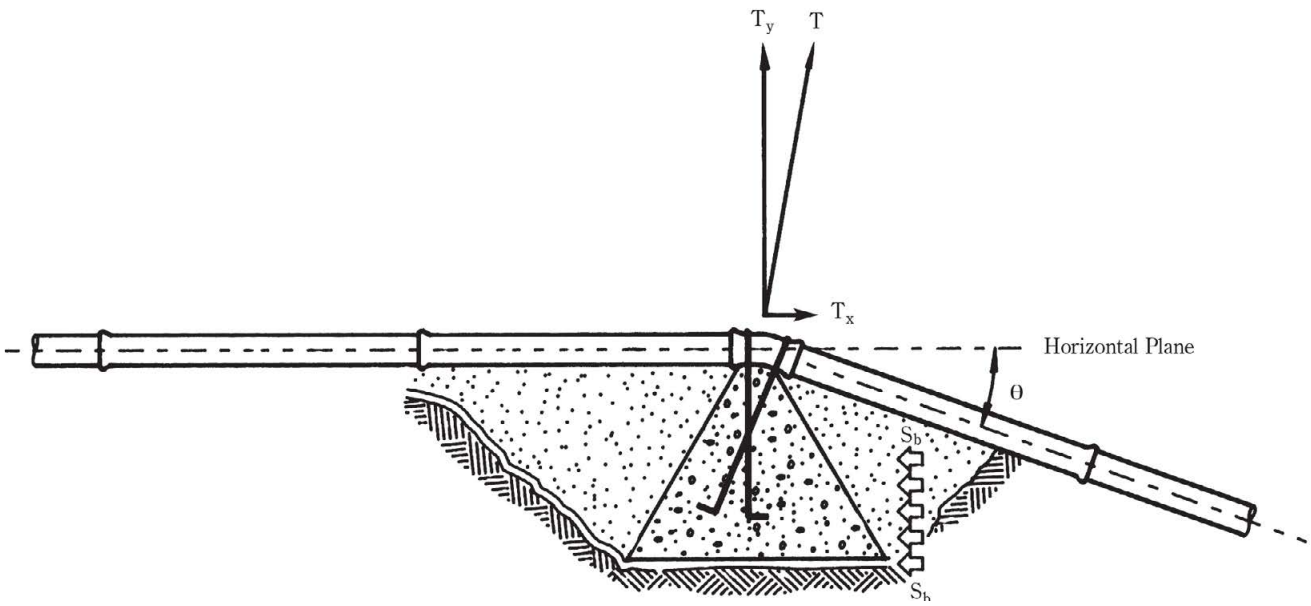

Restrained Joints

An alternative method of providing thrust restraint is the use of restrained joints. A restrained joint is a special type of push-on or mechanical joint that is designed to provide longitudinal restraint. Restrained joint systems function in a manner similar to thrust blocks, insofar as the reaction of the entire restrained unit of piping with the soil balances the thrust forces.

The objective in designing a restrained joint thrust restraint system is to determine the length of pipe that must be restrained on each side of the focus of a thrust force. This will be a function of the pipe size, the internal pressure, depth of cover, the characteristics of the soil surrounding the pipe, and whether the pipe is polyethylene encased. The following is a method of accomplishing the design objective. As with most engineering problems, the exact nature of the interaction of the restrained pipe unit and the soil is extremely complex. Limitations of the ability to measure the actual parameters involved and limitations on available knowledge of the precise nature of the interaction require that a practical design procedure be based on various assumptions. The assumptions employed in the following design procedure are, in each case, conservative. This fact, together with the explicit safety factor employed in the procedure, results in a conservative design with an adequate overall safety factor.

The proposed design equation for horizontal bends (Equation 3, page 8) and the suggested soil parameters (Table 2, page 12) are the outgrowth of a design procedure originally proposed by Carlsen.[1] Carlsen's design procedure was based solely on theoretical considerations and was conservatively limited to well-compacted trench conditions. The modification of Carlsen's design procedure embodied herein is the result of full scale tests of 12-inch Ductile Iron Pipe with 45° and 90° bends buried in clay.[2] The data generated by these tests and data available from model studies with 2-inch pipe in sand[3] confirm the conservatism of the present design procedure. Future work in this field should be devoted to large-diameter piping systems, with the objective of further confirming this conservatism.

The thrust force must be restrained or balanced by the reaction of the restrained pipe unit with the surrounding soil. The source of the restraining forces is twofold: first, the static friction between the pipe unit and the soil, and second, the restraint provided by the pipe as it bears against the sidefill soil along each leg of the bend. Both of these forces are presumed to be functions of the restrained length L on each side of the bend and they are presumed to act in the direction opposing the thrust force (i.e., directly opposing impending movement of the bend).

Horizontal Bends (Figure 7)

Figure 7 is a free body diagram of a restrained pipe unit where L is the length of the restrained pipe on each side of the bend. The unit frictional resistance is shown as a distributed force of unit value F_f. The total frictional resistance on each side of the bend is then $F_f L \cos(Ø/2)$.

It is not purported that Figure 7 represents the actual pipe-soil behavior with all trench types and the various restrained joint designs available. Variations in the way different restrained joints respond to loadings, along with soil and installation variables, make this a situation which defies precise theoretical representation. The approach presented, which includes safety factors, is a practical and conservative general thrust restraint design that has been verified by available test data and numerous installed systems.

The bearing resistance is shown as a distributed force with a maximum unit value of R_s at the bend, diminishing linearly to 0 at L. This assumption is based on the fact that the bearing resistance (passive resistance in the soil) is proportional to deformation or movement. As the restrained joints take load, maximum movement will occur at the bend. The total assumed bearing resistance on each side of the bend is $1/2 R_s L \cos(Ø/2)$.

The equilibrium equation for the free body is then

$$PA \sin(Ø/2) = F_f L \cos(Ø/2) + 1/2 R_s L \cos(Ø/2)$$

Employing a safety factor and solving for L,

$$L = \frac{S_f \, PA \tan(Ø/2)}{F_f + 1/2 R_s} \quad (3)$$

S_f = Safety factor (Usually 1.5)

FIGURE 7*

Horizontal Bend

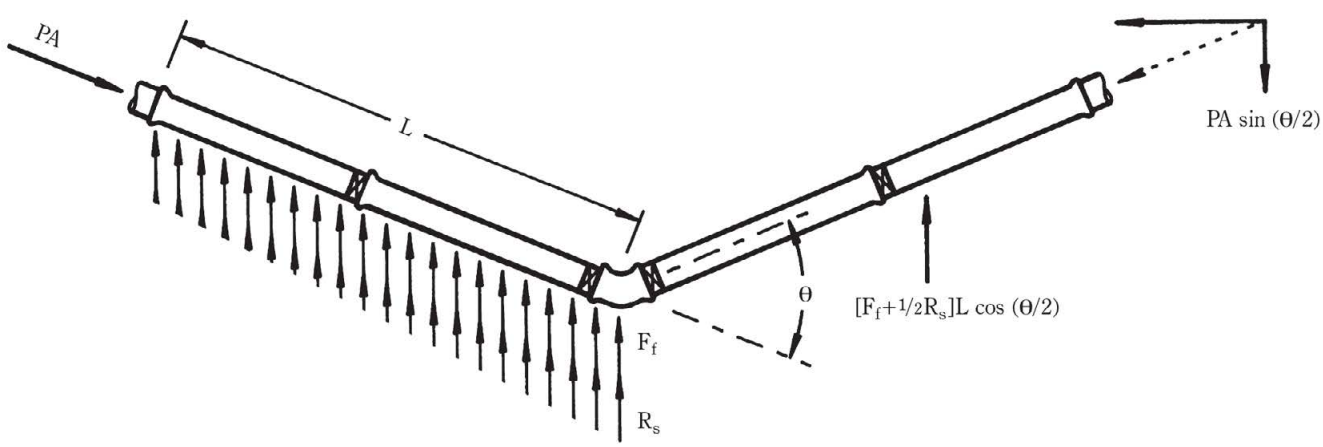

*Free body diagram also applies to vertical up bend.
$F_f = F_s$; For standard asphaltic coated pipe
$F_f = 0.7\ F_s$; For polyethylene encased pipe

Unit Frictional Force, F_s

A static frictional force acting on a body is equal in magnitude to the applied force up to a maximum value. In the conventional analysis, the maximum static friction is proportional to the normal force between the surfaces which provide the friction. The constant of proportionality, in this case called the coefficient of friction, depends upon the nature of the surfaces. Potyondy's empirical work indicates that for friction between pipe and soils, the force is also dependent upon the cohesion of the soil.[4]

Thus

$$F_s = A_p C + W \tan \delta$$

where

$C = f_c C_s$

A_p = surface area of the pipe bearing on the soil

$\delta = f_\varphi \varphi$

$A_p = \frac{\pi D'}{2}$ (for bends, assume 1/2 the 2 pipe circumference bears against the soil)

$= \pi D'$ (for tee branches, dead end conditions, and reducers, assume the full pipe circumference bears against the soil)

Values of soil cohesion (C_s) and internal friction angle of the soil (φ) must be known or conservatively estimated for the soil at a particular installation. f_c and f_φ are related to soil types and pipe material. Table 3 presents conservative values of these parameters for Ductile Iron Pipe in seven general classifications of saturated soils.

The unit normal force W is given by

$$W = 2 W_e + W_p + W_w$$

where the earth load (W_e) is taken as the prism load on the pipe in pounds. The earth load is doubled to account for the forces acting on both the top and the bottom of the pipe (see Figure 8). The unit weight of the pipe and water ($W_p + W_w$) is given in Table 2 on page 12.

Then

for bends:

$$F_s = \frac{\pi D'}{2} C + (2W_e + W_p + W_w) \tan \delta \quad (4a)$$

for tee branches, dead end conditions and reducers:

$$(F_s)_b = \pi D' C + (2W_e + W_p + W_w) \tan \delta \quad (4b)$$

Extraordinary installations might result in lesser loads and frictional resistance on the pipes than that calculated by these equations and as shown in Figure 7. When such conditions exist, this must be provided for in the design.

FIGURE 8

Unit Normal Forces On Pipe

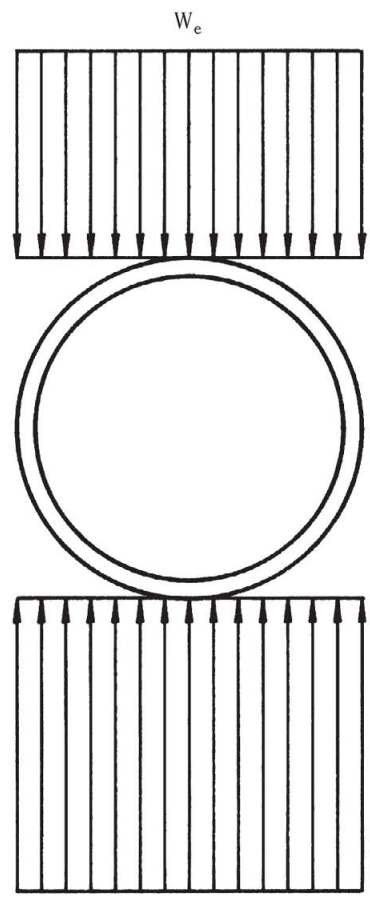

Polyethylene Encasement

Limited experimental data suggest that the frictional resistance terms (F_s) and $(F_s)_b$ should be multiplied by a factor of 0.70 for pipe encased in polyethylene film to determine the appropriate value of F_f to use in the equations.

Unit Bearing Resistance, R_s

The maximum unit lateral resistance, R_s , at the bend is limited so as not to exceed a rectangular distribution of the Rankine passive soil pressure, P_p, which is generally less than the ultimate capacity of the soil to resist pipe movement. Passive soil pressure is a term generally defined as the maximum horizontal pressure that will be resisted by the soil structure without shearing failure of the soil. Horizontal subgrade pressure will result in a deformation of the soil structure. The resistance offered by the subgrade soil increases with this deformation or strain for pressures less than the passive soil pressure. In soils having a density that exceeds the critical void ratio (this condition is usually obtained in stable, undisturbed soil and in backfill compacted to approximately 80% or more of the Standard Proctor density), the movement or deformation that occurs in developing the full passive soil pressure is very small in relation to the allowable, or available, movement at the bend in restrained push-on or mechanical joint systems used with Ductile Iron Pipe.

The passive soil pressure for a particular soil is given by the Rankine formula:

$$P_p = \gamma H_c N_\varphi + 2C_s \sqrt{N_\varphi} \qquad (5)$$

where:

P_p = passive soil pressure (lbs/ft^2)

γ = backfill soil density (lbs/ft^3)

H_c = mean depth from surface to the plane of resistance in feet (centerline of a pipe or center of bearing area of a thrust block) (ft)

C_s = soil cohesion (lbs/ft^2)

N_φ = $\tan^2 (45° + \varphi/2)$

φ = internal friction angle of the soil (deg.)

As discussed above, the full Rankine passive soil pressure, P_p, can be developed with insignificant movement in well compacted soils. For some of the standard Laying Conditions (see Figure 9) for Ductile Iron, the design value of passive soil pressure should be modified by a factor K_n to assure that excessive movement will not occur. Therefore,

$$R_s = K_n P_p D' \qquad (6)$$

Empirically determined values for K_n can be found in Table 3. In this context, the value chosen for K_n depends on the compaction achieved in the trench, the backfill materials, and the undisturbed earth.

For the convenience of the designer, DIPRA has developed a computer program – Thrust Restraint Design for Ductile Iron Pipe – to assist with calculations for most restrained joint configurations. It is based on the seven soil types and suggested parameters in Table 3. The suggested values of the parameters listed in Table 3 are believed to be very conservative; however, DIPRA cannot assume responsibility that these values correspond to actual conditions at any particular job site.

TABLE 2
Dimensions and Unit Weights of Pipe and Water

Nominal Pipe Size (in)	Pressure Class	Pipe Outside Diameter, D' (ft)	Cross-sectional Area of Pipe, A (in^2)	W_p (lbs/ft)	W_w (lbs/ft)	$W_p + W_w$* (lbs/ft)
3	350	0.33	12.3	10	4	14
4	350	0.40	18.1	12	6	18
6	350	0.58	37.3	18	13	31
8	350	0.75	64.3	24	24	48
10	350	0.93	96.7	30	37	67
12	350	1.10	136.8	39	53	92
14	250	1.28	183.8	47	72	119
16	250	1.45	237.7	57	94	151
18	250	1.63	298.6	66	119	185
20	250	1.80	366.4	78	147	225
24	200	2.15	522.7	93	212	305
30	150	2.67	804.2	123	329	452
36	150	3.19	1152.0	163	473	636
42	150	3.71	1555.2	206	642	848
48	150	4.23	2026.8	261	838	1099
54	150	4.80	2602.1	325	1078	1403
60	150	5.13	2981.2	371	1237	1608
64	150	5.47	3387.0	410	1407	1817

*Based on minimum pressure class pipe with standard cement-mortar lining. The difference in $W_p + W_w$ for other pipe pressure classes is not normally significant in relation to these calculations and these values may be used conservatively regardless of pipe pressure class. However, the designer may use actual pipe weights for optimum design if desired.

FIGURE 9

Standard ANSI/AWWA C150/A21.50 Laying Conditions for Ductile Iron Pipe

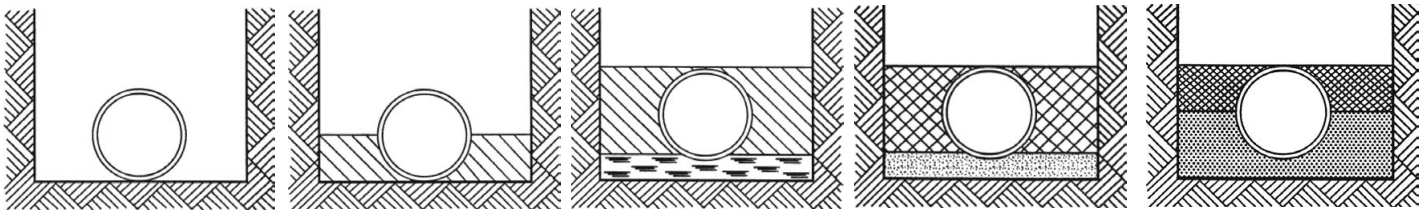

Type 1*
Flat-bottom trench.† Loose backfill.

Type 2
Flat-bottom trench.† Backfill lightly consolidated to centerline of pipe.

Type 3
Pipe bedded in 4-inch minimum loose soil.‡ Backfill lightly consolidated to top of pipe.

Type 4
Pipe bedded in sand, gravel, or crushed stone to depth of 1/8 pipe diameter, 4-inch minimum. Backfill compacted to top of pipe. (Approximately 80% Standard Proctor, AASHTO T-99.)§ (See Table 1 for notes.)

Type 5
Pipe bedded to its centerline in compacted granular material,** 4-inch minimum under pipe. Compacted granular or select‡ material to top of pipe. (Approximately 90% Standard Proctor, AASHTO T-99.)§

* For 14-inch and larger pipe, consideration should be given to the use of laying conditions other than Type 1.
† "Flat-bottom" is defined as "undisturbed earth."
‡ "Loose soil" or "select material" is defined as "native soil excavated from the trench, free of rocks, foreign material, and frozen earth."
†† AASHTO T-99 "Standard Method of Test for the Moisture-Density Relations of Soils Using a 5.5 lb (2.5 kg) Rammer and a 12 in. (305 mm) Drop." Available from the American Association of State Highway and Transportation Officials.
** Granular materials are defined per the AASHTO Soil Classification System (ASTM D3282) or the Unified Soil Classification System (ASTM D2487), with the exception that gravel bedding/backfill adjacent to the pipe is limited to 2" maximum particle size per ANSI/AWWA C600.

TABLE 3
Suggested Values for Soil Parameters and Reduction Constant, K_n

Soil Designation*	Soil Description*	φ (deg)	f_φ	C_s (psf)	f_c	γ*** (pcf)	K_n A21.50 Laying Condition 2	3	4	5
Clay 1	Clay of Medium to Low Plasticity, LL‡<50, <25% Coarse Particles§ [CL & CL-ML]***	0	0	300	.50† .80	90	.20	.40	.60	.85
Silt 1	Silt of Medium to Low Plasticity, LL‡<50, <25% Coarse Particles§ [ML & ML-CL]***	29	.50† .75	0	0	90	.20	.40	.60	.85
Clay 2	Clay of Medium to Low Plasticity w/Sand or Gravel, LL‡<50, 25-50% Coarse Particles§ [CL]***	0	0	300	.50† .80	90	.40	.60	.85	1.0
Silt 2	Silt of Medium to Low Plasticity w/Sand or Gravel, LL‡<50, 25-50% Coarse Particles§ [ML]***	29	.50† .75	0	0	90	.40	.60	.85	1.0
Coh-gran	Cohesive Granular Soils, >50% Coarse Particles§ [GC & SC]***	20	.40† .65	200	.40	90	.40	.60	.85	1.0
Sand Silt	Sand or Gravel w/Silt, >50% Coarse Particles§ [GM & SM]***	30	.50† .75	0	0	90	.40	.60	.85	1.0
Good Sand and Gravel	Clean Sand or Gravel, >95% Coarse Particles§ [SW, SP, & GW]***	36	.75† .80	0	0	100	.40	.60	.85	1.0

* See "Select Backfill Considerations" on page 19.
** For conservatism, values for Đ shown in Table 3 and used in this procedure are lower than the soil weight values used to calculate earth loads in ANSI/AWWA C150/A21.50. All other values in Table 3 assume saturated soil conditions and were also selected as such for conservatism.
‡ Liquid Limit.
§ "Coarse Particles" are those particles held on a No. 200 Sieve.
*** See Table 4 for more detailed soil descriptions.
† These values to be used for Laying Condition Type 2.

TABLE 4
Soil Classification Chart (Adaptation of ASTM D2487†)

Major Divisions			Group Symbols	Typical Names
Coarse-grained Soils More than 50% retained on No. 200 sieve*	Gravels 50% or more of coarse fraction retained on No. 4 sieve	Clean Gravels	GW	Well-graded gravels and gravel-sand mixtures, little or no fines
			GP	Poorly graded gravels and gravel-sand mixtures, little or no fines
		Gravels With Fines	GM	Silty gravels, gravel-sand-silt mixtures
			GC	Clayey gravels, gravel-sand-clay mixtures
	Sands More than 50% of coarse fraction passes No. 4 sieve	Clean Sands	SW	Well-graded sands and gravelly sands, little or no fines
			SP	Poorly graded sands and gravelly sands, little or no fines
		Sands With Fines	SM	Silty sands, sand-silt mixtures
			SC	Clayey sands, sand-clay mixtures
Fine-grained Soils 50% or more passes No. 200 sieve*	Silts And Clays Liquid limit 50% or less		ML	Inorganic silts, very fine sands, rock flour, silty or clayey fine sands
			CL	Inorganic clays of low to medium plasticity, gravelly clays, sandy clays, silty clays, lean clays
			OL	Organic silts and organic silty clays of low plasticity
	Silts And Clays Liquid limit greater than 50%		MH	Inorganic silts, micaceous or diatomaceous fine sands or silts, elastic silts
			CH	Inorganic clays of high plasticity, fat clays
			OH	Organic clays of medium to high plasticity
Highly Organic Soils			PT	Peat, muck and other highly organic soils

† For more detailed information about classification criteria, please consult ASTM D2487.
* Based on the material passing the 3-in. (75-mm) sieve.

The following design equations for vertical bends, tees, reducers, and dead ends were derived with assumptions similar to those used in the derivation of the horizontal bend equation (Equation 3). Space does not permit full discussion of the derivations, nor does it allow discussion of all possible fittings and thrust configurations.

Vertical Down Bends (Figure 10)

Note: For conservatism, the weight of the earth, pipe, and water directly opposing the thrust force is ignored; however, the weight of the earth, pipe, and water is used in calculating the Unit Frictional Force, F_s.

Summation of forces in the "Y" direction:

$$\Sigma F_Y = 0 \text{ Gives}$$

$$2PA \sin(Ø/2) - 2F_f L \cos(Ø/2) = 0$$

Employing a safety factor and solving for L,

$$L = \left[\frac{S_f \, PA \tan(Ø/2)}{F_f} \right] \quad (7)$$

S_f = Safety factor (Usually 1.5)

Vertical Up Bends (Figure 7)

$$L = \left[\frac{S_f \, PA \tan(Ø/2)}{F_f + 1/2R_s} \right] \quad (8)$$

S_f = Safety factor (Usually 1.5)

Notes:

1. Force diagram is identical to that for horizontal bends (see Figure 7).
2. As the bend system in this case will attempt to move in the direction of thrust, and against the bottom of the trench, the values of K_n in this case should be chosen to reflect the conditions of the trench bottom on which the pipe rests, assuming adequate bell holes are provided. In most cases, values representing those of Type 4 or 5 trench conditions may be used, as the trench bottom is normally relatively undisturbed.

FIGURE 10

Vertical Down Bends

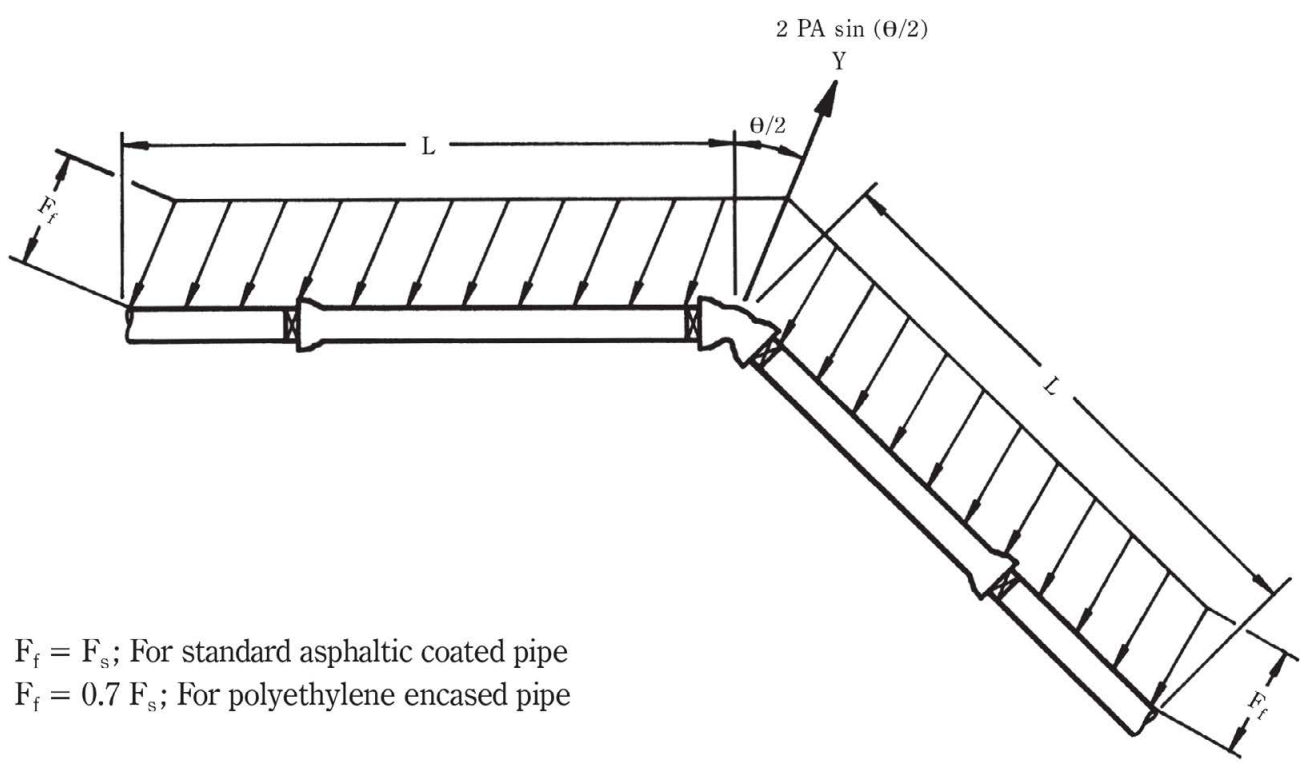

$F_f = F_s$; For standard asphaltic coated pipe
$F_f = 0.7\ F_s$; For polyethylene encased pipe

Tees (Figure 11)

$$PA_b = L_b F_f + 1/2 R_s L_r$$

Employing a safety factor and solving for L_b,

$$L_b = \left[\frac{S_f PA_b - 1/2 R_s L_r}{F_f} \right] \quad (9)$$

$$R_s = K_n P_p D'_r$$

A_b = Cross sectional area of branch (in^2)
L_b = Length of branch (ft) to be restrained
L_r = Total length between first joints on either side of tee on the run (ft)
D'_r = Diameter of run (ft)
F_f = $(F_s)_b$; For standard asphaltic coated pipe
F_f = 0.7 $(F_s)_b$; For polyethylene encased pipe
$(F_s)_b$ = Unit frictional force (lbs/ft) on branch
= $\pi D'C + (2W_e + W_p + W_w) \tan \delta$
(used for tee branches, dead end conditions and reducers)
S_f = Safety factor (Usually 1.5)

FIGURE 11

Tees

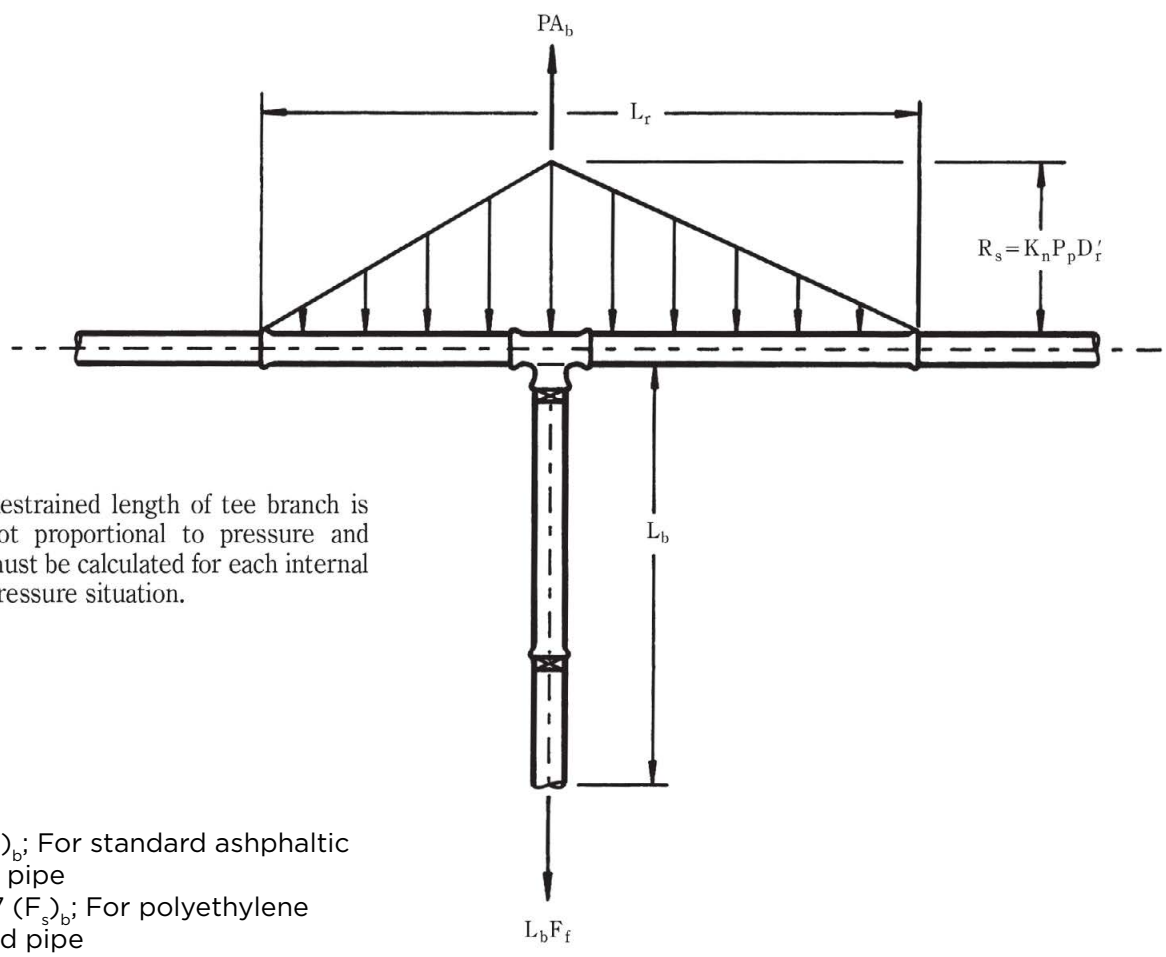

Note: Restrained length of tee branch is not proportional to pressure and must be calculated for each internal pressure situation.

$F_f = (F_s)_b$; For standard ashphaltic coated pipe
$F_f = 0.7\ (F_s)_b$; For polyethylene encased pipe

Reducers (Figure 12)

A_1= Cross sectional area of larger pipe

A_2= Cross sectional area of smaller pipe

$$L_1 = \left[\frac{S_f P(A_1 - A_2)}{F_{f1}} \right] \quad (10)$$

S_f = Safety factor (Usually 1.5)

Note: If straight run of pipe on small side of reducer exceeds

$$L_2 = \left[\frac{S_f P(A_1 - A_2)}{F_{f2}} \right] \quad (11)$$

then no restrained joints are necessary.

FIGURE 12

Reducers

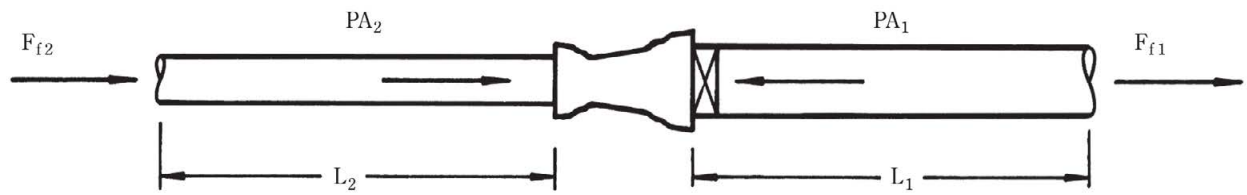

$F_{f2} = (F_s)_{b2}$; For standard asphaltic coated pipe

$F_{f2} = 0.7\ (F_s)_{b2}$; For polyethylene encased pipe

$F_{f1} = (F_s)_{b1}$; For standard asphaltic coated pipe

$F_{f1} = 0.7\ (F_s)_{b1}$; For polyethylene encased pipe

Dead Ends (Figure 13)

$$L = \left[\frac{S_f PA}{F_f} \right] \quad (12)$$

S_f = Safety factor (Usually 1.5)

FIGURE 13

Dead Ends

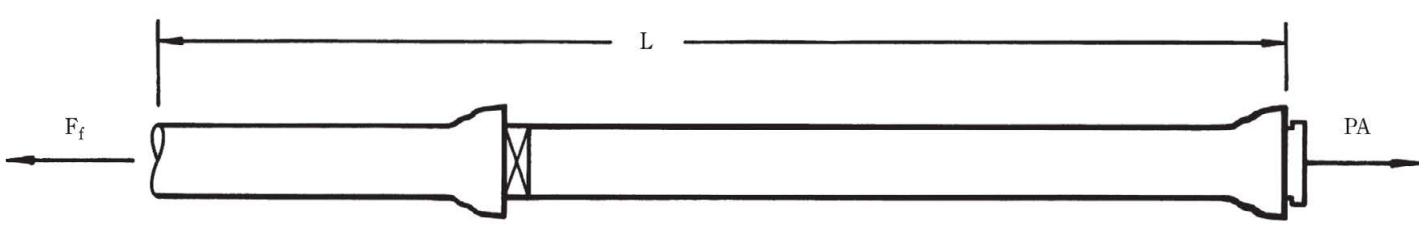

Ff = (Fs)b; For standard asphaltic coated pipe

Ff = 0.7 (Fs)b; For polyethylene encased pipe

Encroaching Restrained Lengths

Both horizontal and vertical offsets are commonly encountered in restrained sections of a line. These offsets should be made with as small a degree bend as possible in order to minimize the thrust loads and restrained length required. Also, in these configurations an increase in line segment length could be detrimental to the pipeline or surrounding structures due to over-deflection of the joints; therefore, the restrained joints should be fully extended (if applicable) during installation.

In certain configurations, fittings may be close enough to one another that adjacent calculated restrained lengths overlap. In situations of this type, one approach is to:

1) Restrain all pipe between the two fittings
2) Assume 1/2 of the restrained pipe length between the two fittings acts to resist the thrust force of each fitting and
3) Using the appropriate equations, calculate the additional restrained length required on the outer legs of the fittings.

Following are two such examples:

Equal Angle Vertical Offset (Ø°)* (Figure 14)

For L_1:

$$\Sigma F = 0$$

$$[2PA \sin (Ø/2)] = [F_f L \cos (Ø/2)] + [F_f L_1 \cos (Ø/2)]$$

Employing a safety factor and solving for L_1,

$$L = \frac{S_f\, 2PA \tan (Ø/2)}{F_f} - L \quad (13)$$

For L_2:

$$\Sigma F = 0$$

$$[2PA \sin (Ø/2)] = [F_f L \cos (Ø/2)] + [1/2 R_s L \cos (Ø/2)] + [F_f L_2 \cos (Ø/2)] + [1/2 R_s L_2 \cos (Ø/2)]$$

Employing a safety factor and solving for L_2,

$$L = \frac{S_f\, 2PA \tan (Ø/2)}{F_f + 1/2 R_s} - L \quad (14)$$

S_f = Safety factor (Usually 1.5)

FIGURE 14

Equal Angle Vertical Offset (Ð°)*

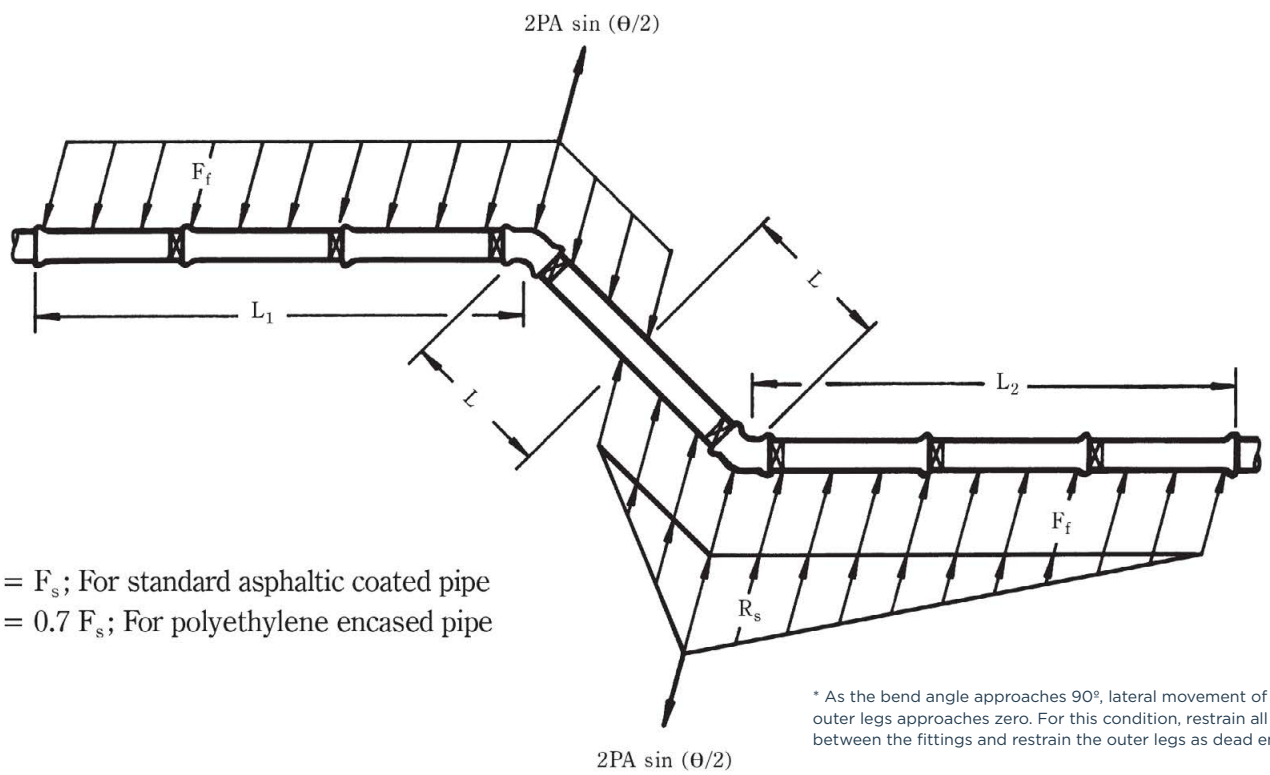

$F_f = F_s$; For standard asphaltic coated pipe
$F_f = 0.7\ F_s$; For polyethylene encased pipe

* As the bend angle approaches 90º, lateral movement of the outer legs approaches zero. For this condition, restrain all pipe between the fittings and restrain the outer legs as dead ends.

Combined Horizontal Equal Angle Bends (Ø°)* (Figure 15)

For L_1:

$$\Sigma F = 0$$

$$[2PA \sin(Ø/2)] = [F_f L \cos(Ø/2)] + [1/2R_s L \cos(Ø/2)] + [F_f L_1 \cos(Ø/2)] + [1/2R_s L_1 \cos(Ø/2)]$$

Employing a safety factor and solving for L_1,

$$L_1 = \frac{S_f\, 2PA \tan(Ø/2)}{F_f + 1/2R_s} - L \quad (15)$$

S_f = Safety factor (Usually 1.5)

FIGURE 15

Combined Horizontal Equal Angle Bends (Ð°)*

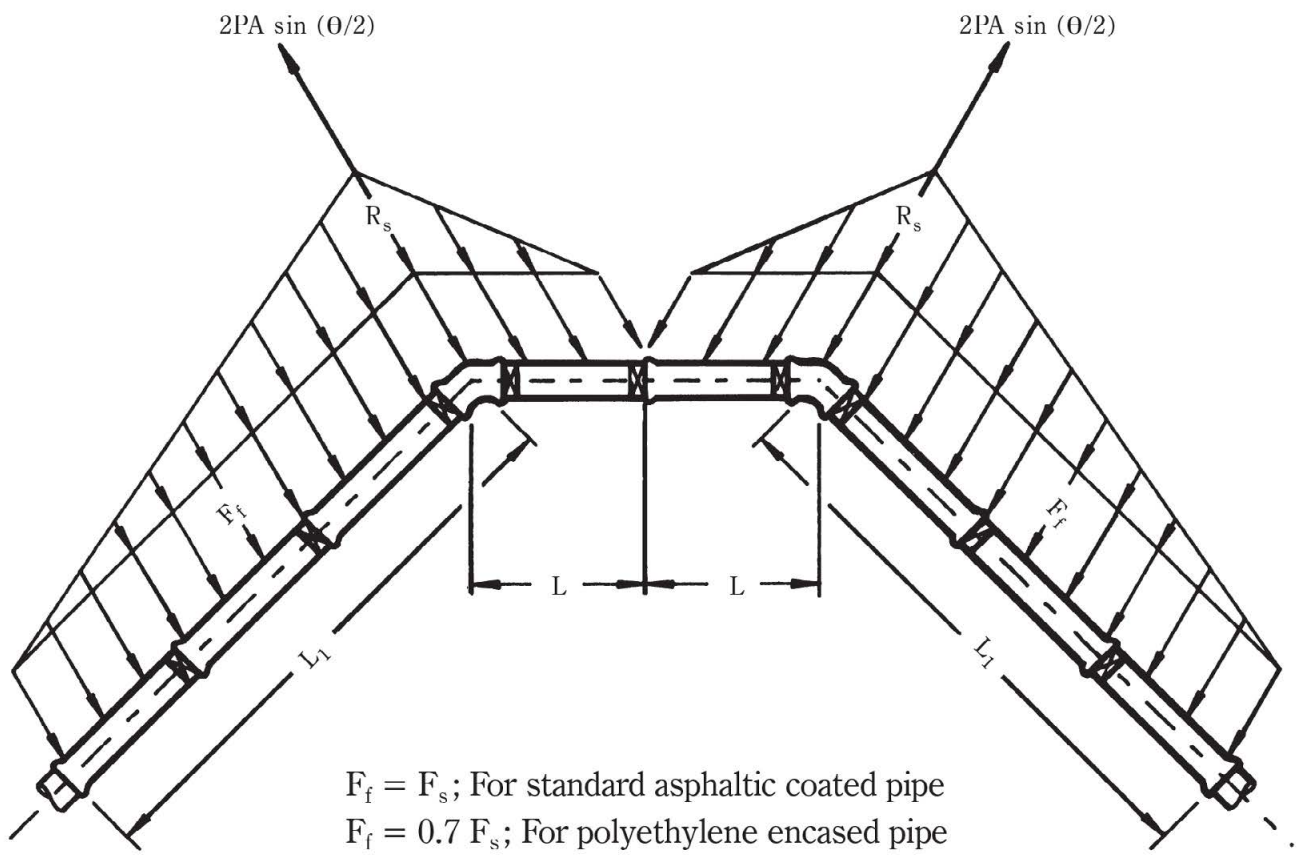

* As the bend angle approaches 90º, lateral movement of the outer legs approaches zero. For this condition, restrain all pipe between the fittings and restrain the outer legs as dead ends.

Combined Vertical Equal Angle Offsets (Ø°)* – Under Obstruction (Figure 16)

Vertical offsets are often combined to route a pipeline under an obstruction or existing utility. If the required restrained lengths of the vertical up bends do not overlap, the system may be treated as two individual vertical offsets (Figure 14). If the required restrained lengths do overlap, one approach is to:

1) Restrain all pipe between the outermost two fittings
2) Due to opposing forces, the thrust forces of the middle two fittings (vertical up bends) are counteracted
3) Assume 1/2 of the restrained pipe length between the vertical down and vertical up bends acts to resist the thrust force of the vertical down bends and
4) Using the appropriate equations, calculate the additional restrained length required on the outermost legs of the offset system (vertical down bends). The resulting equation is the same as for the vertical down bend in the single vertical offset (Equation 13):

$$L_1 = \frac{S_f\, 2PA \tan(Ø/2)}{F_f} - L \qquad (16)$$

S_f = Safety factor (Usually 1.5)

FIGURE 16

Combined Vertical Equal Angle Offsets (Đ°)*

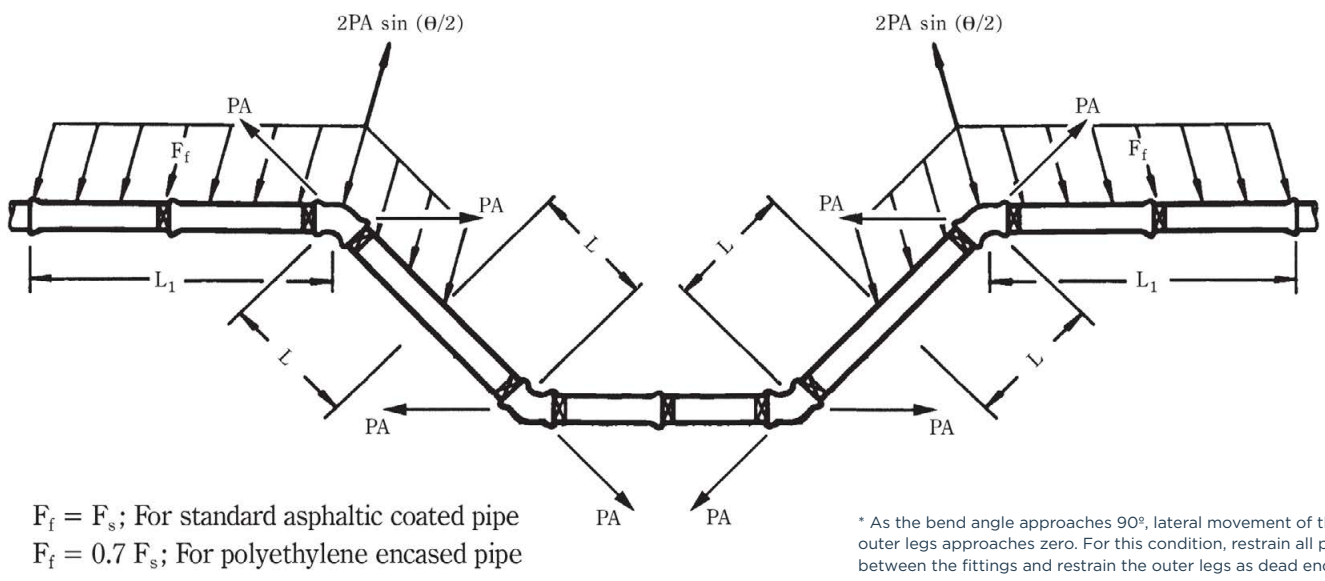

* As the bend angle approaches 90º, lateral movement of the outer legs approaches zero. For this condition, restrain all pipe between the fittings and restrain the outer legs as dead ends.

Combined Vertical Equal Angle Offsets (Ø°)* – Over Obstruction

This can be analyzed in the same manner as Figure 16 with the following equation:

$$L_1 = \frac{S_f\, 2PA \tan(Ø/2)}{F_f + 1/2R_s} - L \qquad (17)$$

S_f = Safety factor (Usually 1.5)

Note: This equation also applies to combined horizontal equal angle offsets (Ø°) – around an obstruction.

Restrained Length

In practice, the actual restrained length attained will generally be in multiples of length of an individual piece of pipe (normally 18 or 20 feet). The length calculated indicates the minimum required restrained length for each side of the bend. Thus, calculated lengths of 0 to 18 or 20 feet normally call for one restrained joint at the fitting, 18 to 36 or 20 to 40 feet normally require two restrained joints, etc.

Select Backfill Considerations

If restrained joint pipe is laid in trench backfill with markedly different support characteristics than the native soil, special considerations may be required. As the pipe is pressurized, it will transmit passive pressure to the backfill that will in turn transmit this pressure to the native soil. Therefore, the material that results in the smaller unit bearing resistance (R_s) should be used for the passive resistance and the unit friction force (F_s) should be based on the backfill material surrounding the pipe.

If restrained joints are used in swamps or marshes where the soil is unstable, or in other situations where the bearing strength of the soil is extremely poor, the entire pipeline should be restrained to provide adequate thrust restraint.

Combining Thrust Blocks and Restrained Joints

Combining restrained joints and thrust blocks by designing each system independently of the other and then incorporating both to the piping system normally yields the greatest degree of security. It is often poor practice to mix systems based on each system being designed to resist a percentage of the resultant thrust force. Both thrust blocks and restrained joint pipe systems require slight movement before their respective thrust restraint capability can be developed. Those movements must be compatible for the combination to be successful. Because of the uncertainties of the degree of these movements being compatible, this design approach must be given special consideration.

Pipe in a Casing

It is often necessary to install restrained joint pipe through a casing pipe. The function of restrained joint pipe is basically to transfer thrust forces to the soil structure. Therefore, if the annular space between the two pipes is not grouted in, the length of restrained pipe inside the casing should not be considered as part of the restrained length to balance the thrust force. When restrained joint pipe is installed through a casing pipe, the restrained joints should normally be fully extended.

Future Excavations

One particular concern of those with responsibility for infrastructure pipeline design, installation, and maintenance is the possibility of substantial excavation in the close vicinity of previously installed restrained pipe and fittings including parallel excavations. Remembering the usual function of restrained pipes in transmitting thrust forces to the soil structure, it is obvious that if this structure is removed or significantly disturbed with the pipeline under pressure, the safety and stability of the system may be compromised. In this regard, it would seem reasonable to temporarily shut down close existing restrained lines to do such work, or to conduct such operations during lowest pressure service conditions. Where this is not practical or possible, alternate provisions might be safely employed. These precautions might include supplementary thrust blocking, restraint with laterally loaded piles or batter piles at the thrust focus, special pipe anchors, or other careful, sequential, and innovative engineering and construction procedures. Proper engineering and construction judgment must be exercised in these conditions.[2]

Deflected Unrestrained Ductile Iron Pipe Joints

Unrestrained push-on and mechanical joint Ductile Iron Pipe are capable of deflections up to 8° (depending on joint type and pipe size). These joints are well-suited for diverting pipelines from obstructions or when following the curvature of streets and roads. In an effort to keep thrust forces to a minimum, joint deflections should be utilized whenever possible rather than fittings In pressurized systems — thrust forces develop at these joint deflections. In the vast majority of installations the soil-pipe interaction will result in reasonable security and stability of the joints. Only in extraordinary circumstances, e.g., unstable soils, high internal pressure in combination with very shallow cover, etc., is the security threatened. In these situations, soil-pipe thrust resisting principles, not unlike those presented in this manual, may be applied to these unrestrained joint situations.

Computer Program

For the convenience of the designer, a computer program has been developed based upon the procedures and equations of this manual. It can be used to assist with calculations of both Unit Frictional Force and Unit Bearing Resistance. Additionally, the computer program may be used to facilitate calculations in determining the required length of restrained piping. This program can be accessed on DIPRA's website at http://www.dipra.org.

Restrained Length Calculation Procedure

EXAMPLE: 30-inch Ductile Iron Pipeline to be buried under 6 feet of cover in a cohesive granular backfill that will be compacted to 80% Standard Proctor density to the top of the pipe (Laying Condition 4). The thrust restraint design pressure is 150 psi. Determine the length of restrained piping required at a 90° horizontal bend.

STEP 1: Establish known values for:

$$L = \frac{S_f\, PA \tan(Ø/2)}{F_f + 1/2R_s} \quad (3)$$

Where:

$R_s = K_n P_p D'$

$S_f = 1.5$

$P = 150$ psi

$D' = 32/12 = 2.67$ ft

$A = 36\pi(D')^2 = 806.3$ in^2

$Ø = 90°$

$K_n = 0.85$ (From Table 3)

$F_f = F_s$

STEP 2: Determine Unit Frictional Resistance, F_s

$$F_s = \frac{\pi D'}{2} C + (2W_e + W_p + W_w) \tan \delta \quad (4a)$$

Where:

$C = f_c C_s = (0.40)(200) = 80$ psf

$f_c = 0.40$, $C_s = 200$ psf (From Table 3)

$W_e = H\gamma D' = 6 \times 90 \times 2.67 = 1442$ lbs/ft

$H = 6$ ft of cover (given)

$\gamma = 90$ pcf (From Table 3)

$W_p + W_w = 452$ lbs/ft (From Table 2)

$\delta = f_\varphi \varphi = (0.65)(20) = 13°$

$f_\varphi = 0.65$, $\varphi = 20°$ (From Table 3)

Then:

$$F_s = \frac{\pi(2.67)(80)}{2} + [2(1442)+452]\tan 13°$$

$F_s = 335.5+770.2=1105.7$ lbs/ft

STEP 3: Determine Passive Soil Resistance, P_p

$$P_p = \gamma H_c N_\varphi + 2C_s \sqrt{N_\varphi} \quad (5)$$

Where:

$H_c = H + 1/2D' = 6 + \frac{2.67}{2} = 7.33$ ft

$N_\varphi = \tan 2(45 + \varphi/2) = \tan^2(45+\frac{20}{2}) = 2.04$

Then:

$P_p = (90)(7.33)(2.04) + (2)(200)\sqrt{2.04}$

$P_p = 1345.8 + 571.3 = 1917.1$ lbs/ft^2

STEP 4: Substitute known and determined values into Equation 3 listed in STEP 1 to determine required restrained length.

$$L = \frac{(1.5)(150)(806.3)\tan(90/2)}{1105.7 + [1/2\,(0.85)(1917.1)(2.67)]}$$

$$L = \frac{181{,}417.5}{1105.7+2175.4}$$

$L = \underline{55.3 \text{ ft.}}$

NOTE: The DIPRA Computer Program, Thrust Restraint Design for Ductile Iron Pipe, may be used to facilitate calculations in determining the required length of restrained piping.

Nomenclature

A = Cross-sectional area of pipe (inch^2) = 36π D′ 2 (See Table 2)

A_p = Surface area of pipe exterior (ft^2/ft)

b = Thrust block width (ft)

C = Pipe cohesion (lbs/ft^2)

C_s = Soil cohesion (lbs/ft^2) (See Table 3)

D' = Outside diameter of pipe (ft) (See Table 2)

f_c = Ratio of pipe cohesion to soil cohesion (See Table 3)

F_f = Unit frictional resistance (lbs/ft)

F_s = Unit frictional force assuming 1/2 the pipe circumference bears against the soil (lbs/ft)

$(F_s)_b$ = Unit frictional force assuming the entire pipe circumference contacts the soil (lbs/ft)

f_φ = Ratio of pipe friction angle to soil friction angle (See Table 3)

h = Thrust block height (ft)

H = Depth of cover to top of pipe (ft)

H_c = Depth of cover to pipe centerline (ft)

H_t = Depth to bottom of thrust block (ft)

K_n = Trench condition modifier (See Table 3)

L = Minimum required restrained pipe length (ft)

N_φ = tan2 (45° + φ/2)

P = Design pressure (psi)

P_p = Passive soil pressure (lbs/ft^2)

R_s = Unit bearing resistance (lbs/ft)

S_b = Horizontal bearing strength of soil (lbs/ft^2) (See Table 1)

T = Resultant thrust force (lbs)

γ = Backfill soil density (lbs/ft^3) (See Table 3)

W = Unit normal force on pipe = 2 W_e + W_p + W_w (lbs/ft)

W_e = Earth prism load (lbs/ft) = γHD′

W_m = Density of thrust block material (lbs/ft^3)

W_p = Unit weight of pipe (lbs/ft) (See Table 2)

W_w = Unit weight of water (lbs/ft) (See Table 2)

Ø = Bend angle (degrees)

δ = Pipe friction angle (degrees)

φ = Soil internal friction angle (degrees) (See Table 3)

S_f = Safety factor (usually 1. 5)

V_g = Volume of thrust block (ft^3)

References

1. Carlsen, R.J., "Thrust Restraint for Underground Piping Systems." *Cast Iron Pipe News*, Fall 1975.
2. Conner, R.C. "Thrust Restraint of Buried Ductile Iron Pipe," Proceedings of Pipeline Infrastructure Conference, Boston, Massachusetts, June 6-7, 1988. Published by *ASCE*, New York, NY, 1988, p. 218.
3. Reference U.S. Pipe & Foundry Company research (Unpublished).
4. Potyondy, J.G., M. Eng., *Skin Friction Between Various Soils and Construction Materials*.
5. ASTM D 2487—Classification of Soils for Engineering Purposes.

For more information contact DIPRA or any of its member companies.

Ductile Iron Pipe Research Association

An association of quality producers dedicated to the highest pipe standards through a program of continuing research and service to water and wastewater professionals.

P.O. Box 190306
Birmingham, AL 35219
205.402.8700 Tel
www.dipra.org

Social Media

Get in the flow with Ductile Iron Pipe by connecting with us on Facebook, Twitter, and LinkedIn.

Visit our website, **www.dipra.org/videos,** and click on the YouTube icon for informational videos on Ductile Iron Pipe's ease of use, economic benefits, strength and durability, advantages over PVC, and more.

Member Companies

AMERICAN Ductile Iron Pipe
P.O. Box 2727
Birmingham, Alabama 35202-2727

Canada Pipe Company, Ltd.
55 Frid St. Unit #1
Hamilton, Ontario L8P 4M3 Canada

McWane Ductile
P.O. Box 6001
Coshocton, Ohio 43812-6001

United States Pipe and Foundry Company
Two Chase Corporate Drive
Suite 200
Birmingham, Alabama 35244

Ductile Iron Pipe is SMART certified

Copyright © 2016 by Ductile Iron Pipe Research Association