TWISTER
E60 CONTROL PANEL

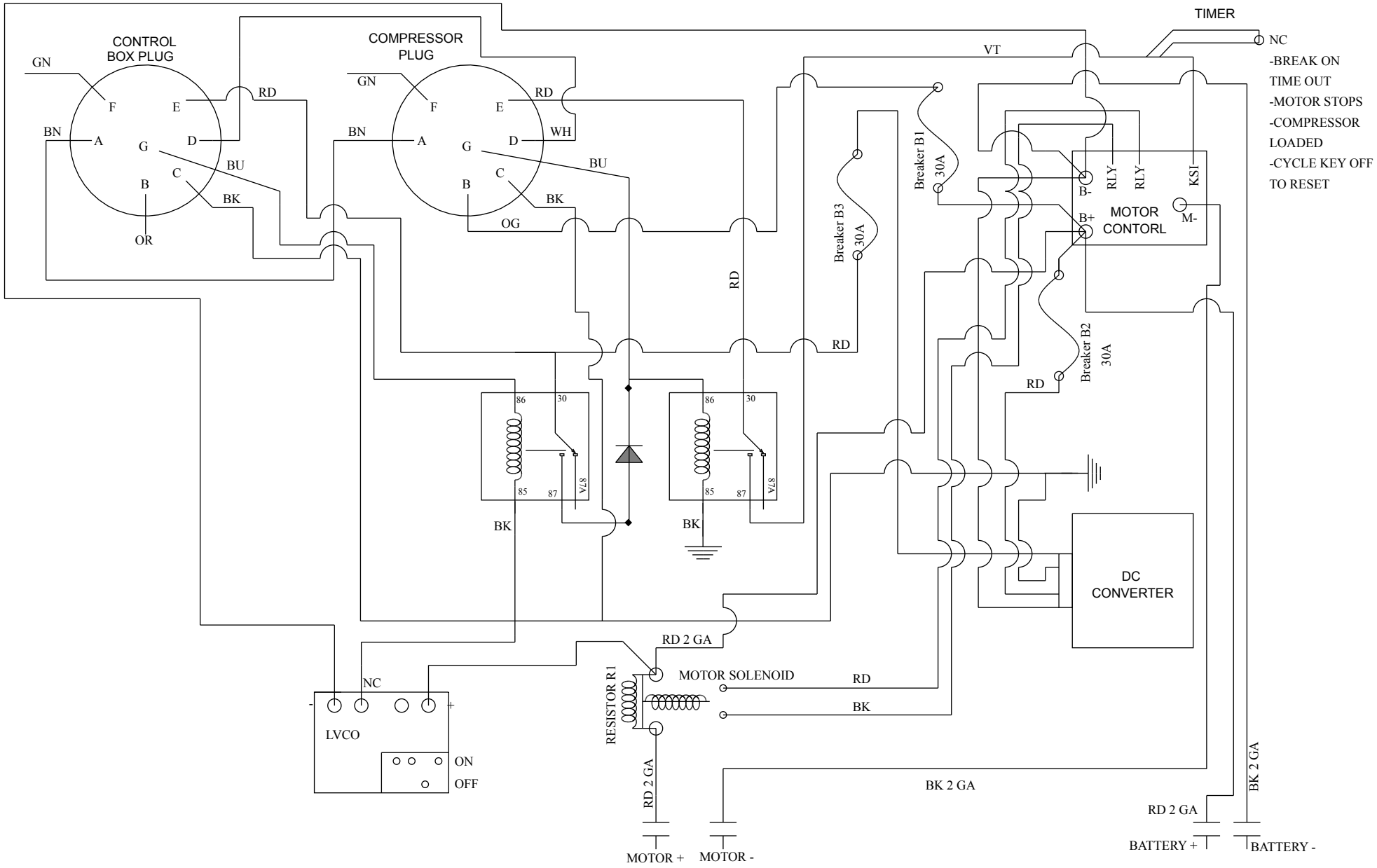

COPYRIGHT AIRWORKS COMPRESSOR CORP.

#4200-04

08/21