Whitepaper

Control of Oxygen, Nitrogen and Hydrogen in Induction Melted Steels

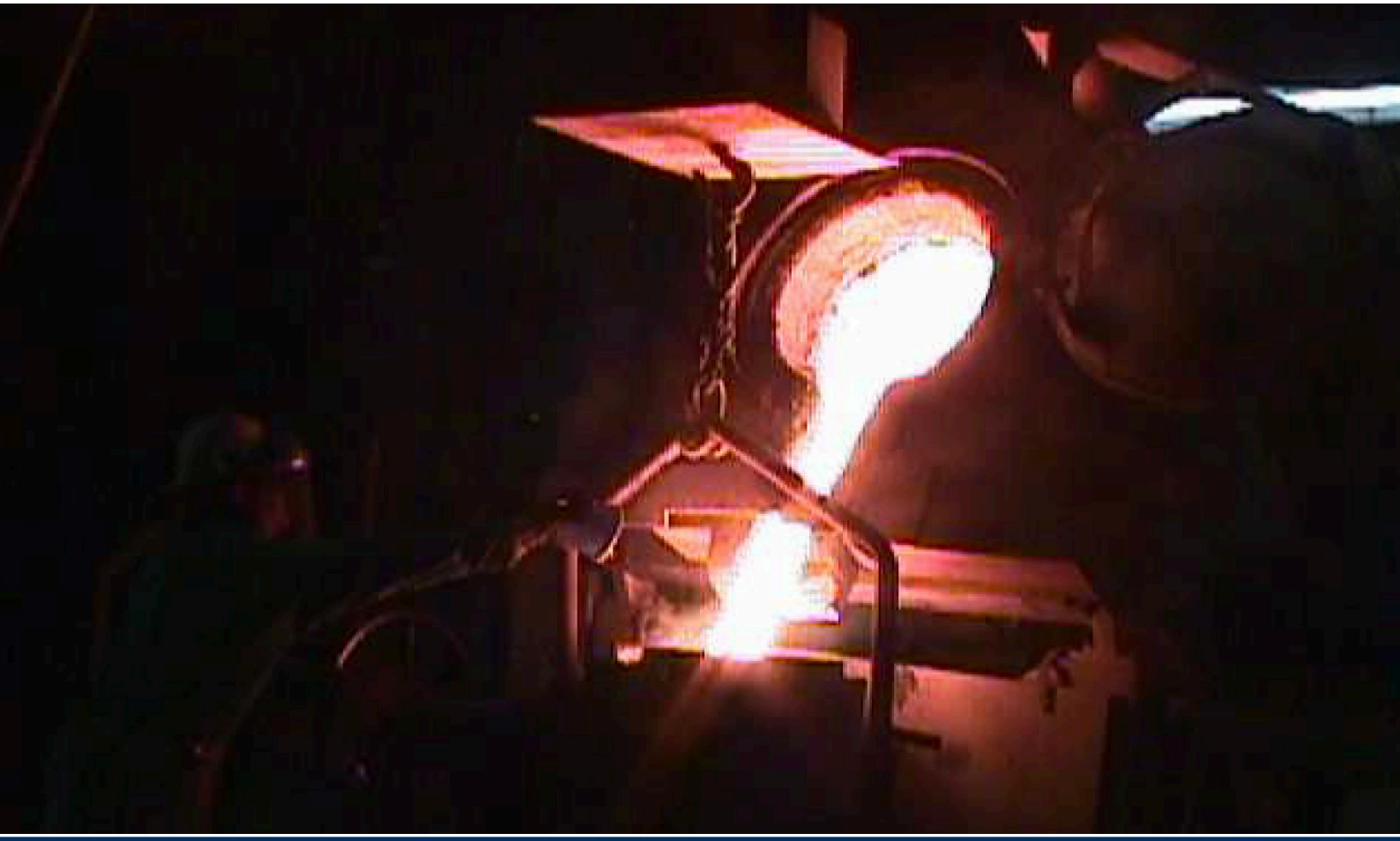

SFSA Technical & Operating Conference
November 2-4, 2000
Chicago, Illinois

Our Innovation. Your Advantage.

BRADKEN

Introduction

Deoxidation and gas removal is of vital importance in the production of defect free steel castings. This topic has been the focus of numerous technical papers in the past.

While deoxidation in an induction furnace can be carried out without significant difficulties by adding an element with greater affinity for oxygen than carbon, the removal of other gases such as hydrogen and nitrogen from the bath of a coreless induction furnace is not always an easy task. In a conventional steel melting/refining process a carbon boil is employed with the intent of carbon reduction and hydrogen and nitrogen removal.

Carbon boil is not a common practice in induction furnace melting, principally due to the fact that the stirring does not allow the development of a distinct slag layer on top of the melt. Some foundries, however, perform a limited carbon boil in the induction furnace. The carbon boil in this case is initiated by introducing iron ore, nickel oxide or gaseous oxygen to the bath. Temperature and amounts of solid oxides must be carefully controlled in order to control the rate of carbon boil. Only a limited amount of degassing can be carried out in the coreless induction furnace.

AG Anderson makes a continuous effort geared to producing castings free of nonmetallic inclusions, gas being one of them. Various methods of gas control and removal were applied and the outcome of those methods will be discussed in the paper.

Vasile Lonescu
Process Engineer - Metallurgist
AG Anderson Ltd. London, Ontario, Canada

Background

AG Anderson Ltd. is a jobbing foundry located in London, Ontario, Canada. The 100-employee facility produces a wide variety of steel and iron castings ranging between 2 lb. and 4,500 lb. The average casting weight is about 600 lb. Carbon, low alloy and stainless steel represent about sixty percent of the casting production, the rest being gray, ductile and high alloy iron.

Melting and Pouring Practice

At AG Anderson melting is performed in three medium frequency induction furnaces with capacities of 600 lb., 2,500 lb., and 4,000 lb. The same power package assists the 600 and the 2,500 lb. furnaces. From time to time the entire melting capacity of the three furnaces is used for pouring large castings. Table 1 includes some of the characteristics of the three furnaces:

Table 1 – Furnace Characteristics

Furnace Characteristics	A	B	C
Capacity (lb.)	600	2,500	4,000
Year of installation	1978	1978	1991
Start to tap time	30 min	120 min	40 min
Power usage (KW)	300	300	750
Refractories used	88.2% $A1_2O_3$	88.2% $A1_2O_3$	88.2% $A1_2O_3$

A spinel bond fused alumina-based refractory is used for lining the three furnaces. The refractory is a combination of 88.2% alumina (Al2O3) and 10% magnesium oxide (MgO). Each furnace is completely relined every 65 – 75 heats.

Pouring is performed using lip pour ladles ranging from 600 to 4,000 lb. Ladles are lined with fused alumina-based castable refractory materials. Tea pot and pre-cast disposable ladles are also employed.

Charges are made using 40 to 60 percent foundry returns and the balance is made up of low carbon iron or 1010 steel, ferroalloys, and deoxidizers. All foundry-generated returns are colour coded and segregated. Purchased scrap is not used in recipes. In order to avoid contamination with unwanted elements, a “wash heat” of medium carbon steel is always employed when switching from melting iron to melting stainless steel or when switching form melting stainless steel to melting ductile iron. Ladles are also “washed” following the same principle.

In the early 90’s, AG Anderson experienced high amounts of gas inclusions in carbon and low alloy steels. The upgrade hours were high, as were the number of castings unable to successfully pass NDT such as X-ray and UT. In 1997 a project intended to determine the cause of and to reduce gas porosity in steel castings was undertaken. Various potential sources of gases were observed and independently addressed:

1. Inefficient deoxidation.
2. Hydrogen absorption during processing of liquid steel.
3. Nitrogen absorption from the furnace atmosphere during melting and superheating.
4. Entrapped air.

1. Inefficient Deoxidation

Oxygen dissolved in the steel [O] reacts with the carbon and produces carbon monoxide:

[C] + [O] = CO (g)

The reaction is usually responsible for gas porosity in the form of pinholes or blowholes in steels insufficiently or inefficiently deoxidized. The usual method of reducing the oxygen content is the addition of a final deoxidizer which has a greater affinity for oxygen than carbon, and which forms a solid or liquid oxide product. In steel casting industry, aluminum is almost universally used as final deoxidizer. The deoxidation products are alumina (Al2O3) and hercynite (FeO-Al2O3).

Through experimentation it was determined that aluminum ranging from 0.04 to 0.06 percent added for final deoxidation was insufficient. Attempts to increase the aluminum additions were made, but other undesired occurrences such as filter blocking, ductility loss and aluminum nitride embrittlement were noticed.

A. Filter Blocking

As a common practice at AG Anderson all steels are filtered using 10 PPI ceramic foam filters. Gating systems capable of accommodating ceramic filters were developed. Each ceramic foam filter is characterized by a specific filter blockage factor (FBF) measured in lb. of metal (capable of being filtered before filter seizing) per square inch of filter.

In the case of aluminum-final-deoxidized steels the filter blockage factor is dramatically reduced as a result of the following reaction:

2Al (l) + 3O = Al2O3 (s)

Al2O3 (s) agglomerates the filter pores and reduces significantly the filter blockage factor.

Extensive projects intended to determine the filter blockage factor (FBF) for aluminum deoxidized steels were carried out and the results were compared with the filter manufacturer ratings and recommendations. The method of investigation was trial and error.

It was determined that additions of aluminum in excess of 0.05% will reduce the filter blockage factor of ceramic filters from 25 to 10 lbs./sq. inch and sometimes even 5 lbs./sq. inch.

Filter blockage may prevent the metal from entering the mould, thus generating an incomplete casting. Another undesirable outcome of filter blockage is filter breakage. As the filter starts clogging, the metallostatic pressure on one side of the filter increases and as a result, the filter collapses and parts of it enter the mould cavity. When not detected at the final inspection, the inclusions of ceramic material can be the source of serious tooling damage. From this point of view, filter breakage, as a result of filter blockage, is more harmful than even an incomplete casting having the same root cause. It is always better to scrap a casting in its early stage than a partially machined one.

The study determined that, in order to increase the filter blockage factor (FBF), the amount of aluminum used for deoxidation must be drastically reduced. In this case,

another additional final deoxidizer was needed. When a combination of 0.05% titanium and 0.02% aluminum was used, the filter blockage factor increased to 45 lbs./sq. inch. At the same time it was noticed that the amount of defects related to gas porosity was significantly reduced. The 0.05% titanium and 0.02% aluminum combination was used for a period of time as final deoxidizer and then gradually aluminum was completely excluded. Filter sizing guidelines for aluminum and titanium deoxidized carbon and low alloy steels are given in Table 2 (page 04).

Table 2 – Guidelines for filter selection based on maximum recommended pour weight.

Filter Size*	Maximum Recommended Pour Weight (lbs / sq. inch)					
	Aluminum Deoxidized Steels		Al and Ti Deoxidized Steels (0.02%Al, 0.05Ti)		Titanium Deoxidized Steels	
	Single Filter	Double Filter	Single Filter	Double Filter	Single Filter	Double Filter
4” x 4” x 1”	400	850	720	1,530	800	1,700
5” x 5” x 1”	625	1,328	1,125	2,391	1,250	2,656
6” x 6” x 1”	900	1,912	1,620	3,442	1,800	3,825
3” dia. x 1”	177		318		353	
4” dia. x 1”	314		565		628	
5” dia. x 1”	491		883		981	

**10 PPI Filters.*

At AG Anderson final deoxidation of all carbon and low alloy steels is performed using exclusively titanium. The titanium addition ranges between 0.05 to 0.07 percent depending upon steel chemistry, condition of charge materials, melting and holding times. Ferrotitanium is added to the tap stream into the ladle when the ladle is about 1/3 full. Figure 1 captured the moment of ferrotitanium addition as final deoxidizer.

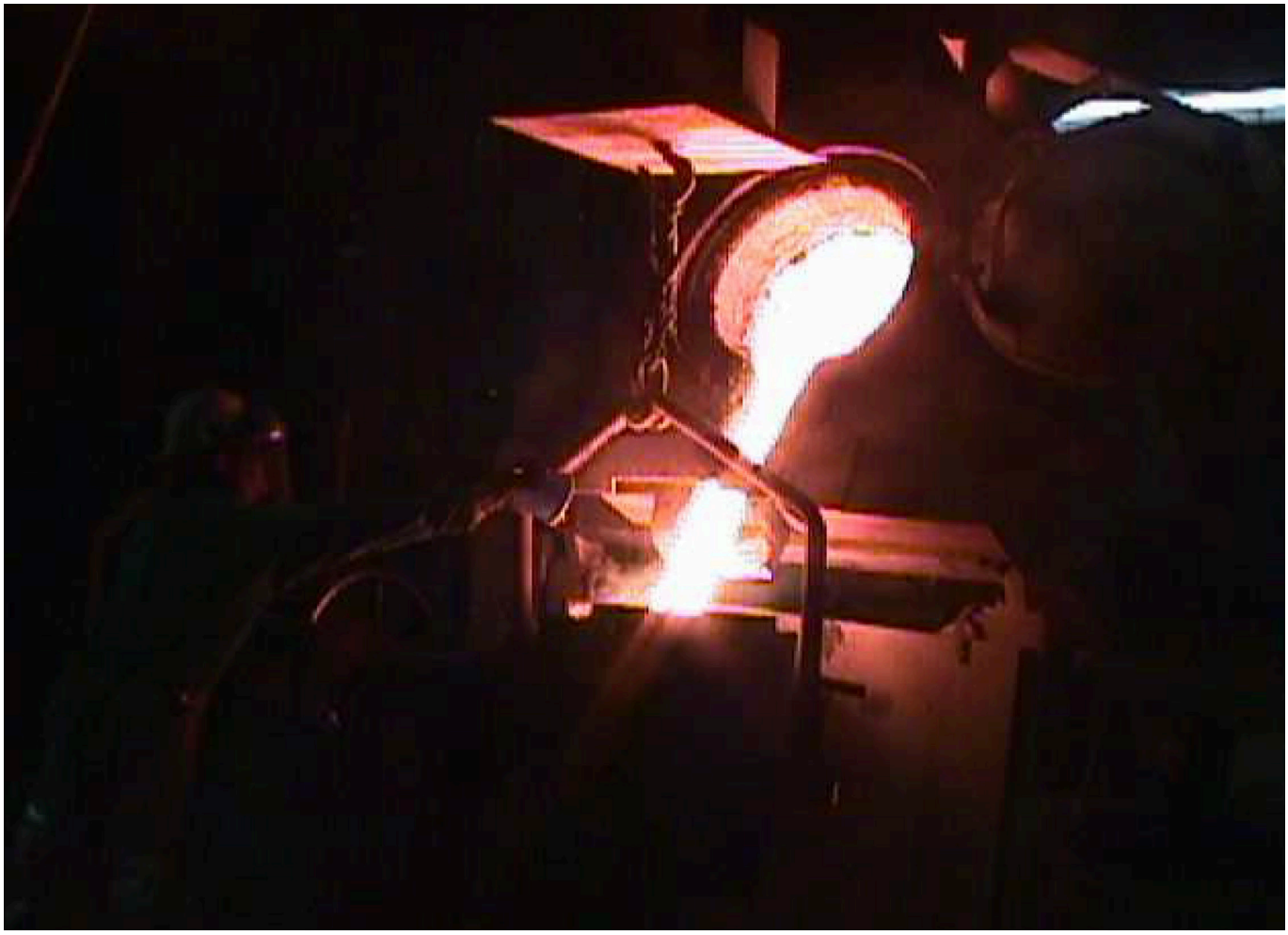

Figure 1 – Addition of Ferrotitanium

B. Aluminum Nitride Embrittlement

The primary cause of “rock candy” type of cracking in steel castings is aluminum nitride precipitation. Aluminum nitrides precipitate in proportion to the aluminum and nitrogen contents, and in inverse proportion to the cooling rate as shown in Figure 2. Even though in most cases the problem is limited to quench-and-tempered, high strength steels, this type of failure was occasionally noticed at AG Anderson in WCB castings.

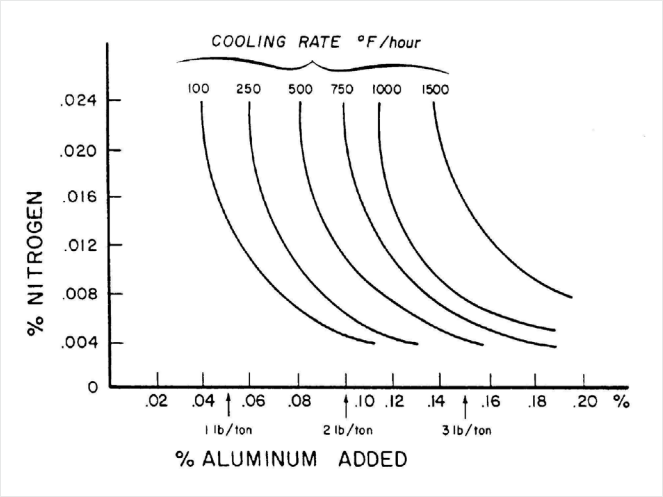

Figure 2 – Influence of aluminum, nitrogen, and cooling rate on the formation of aluminum nitrides.

The occurrence was more obvious when exothermic riser sleeves were used. The opinion was that alumina containing exothermic sleeves increased the Al level in the riser metal. Aluminum levels in the riser metal in excess of 0.08 % in combination with nitrogen levels in excess of 0.004 % were believed to be the cause of hairline rock candy cracks which were developed under the riser and noticed after the final temper. It is well known that nitrogen can be fixed by the addition of titanium. The product of this reaction is titanium nitride that has less detrimental effect on steels.

AG Anderson’s selection of titanium as a final deoxidizer was determined by the necessity to increase the filter blockage factor and to reduce the risk of the aluminum nitride precipitation at the grain boundary that very often is associated with rock candy failure.

2. Hydrogen Absorption

Moisture and hydrocarbons present in the furnace atmosphere, as well as mould coatings and binders, represent the most common sources of hydrogen pick-up. The dissolution of hydrogen in molten steel from water vapor may be expressed as: **H2O = 2[H] + [O]**

A number of conditions are responsible for the absorption of hydrogen leading to pinhole formation and they can occur at different stages of the process of which melting and refining will be further emphasized. During melting and refining, hydrogen absorption can take place as a result of:

1. Hydrogen induced into the charge by wet, rusty, or oily returns;
2. Water vapor formed by wet refractory materials;
3. Use of wet ferroalloy additions;
4. Holding of heats in the furnace after final deoxidizers have been added;
5. Humidity of the furnace atmosphere in relation with the weather.

The only method of driving hydrogen out of the bath is carbon boil. The CO bubbles escaping from the bath act as a carrier of the hydrogen from the bath through the mechanism of diffusion of the hydrogen into the CO bubble. As mentioned earlier in the paper, in the case of induction steelmaking, carbon boil is not a practical option and, as a result, no hydrogen removal can be performed at this stage. However, an effort should be made to produce steel with low hydrogen content by using dry charge materials.

Fast melting and avoiding extended exposure of bare liquid steel to the humid atmosphere are good melting practices, which increase the effectiveness of producing steel with low hydrogen content. In addition, hydrogen absorption can be decreased by ensuring that furnace spout and ladle refractories are properly dried.

3. Nitrogen Absorption

Nitrogen as $N_{2(g)}$ in atmosphere and charge materials are the only sources of nitrogen in the induction furnace melting of steels. The rate of nitrogen pick-up is relatively slow as compared to oxygen and hydrogen but high levels of dissolved nitrogen in steels can cause gas porosity and aluminum nitride embrittlement.

Carbon boil is the only method of nitrogen removal commonly employed by the electric arc furnace steelmaker. As it is the case with hydrogen, when melting takes place in an induction furnace, nitrogen cannot be removed from the bath. However, in order to produce steel with low nitrogen content in an induction furnace, the following factors should be considered:

1. Charge materials. Purchased charged materials including ferroalloys should be of low nitrogen content.
2. Foundry returns. The use of foundry returns, which already contain small amounts of nitrogen, should be limited to 50 to 60 percent.
3. Charge chemistry. It is important to add silicon to the charge early in the steelmaking process to form a protective slag. Routinely, at AG Anderson, 75 percent of the total ferrosilicon required by the recipe is added to the bottom of the charge.
4. Melting and refining. Nitrogen is introduced when bare molten metal is exposed to the atmosphere. To reduce the nitrogen absorption, exposure times should be reduced to a minimum. Whenever practical, bath protection using argon blanketing should be performed.
5. Tapping and pouring. The transfer stream should be as laminar as possible.

4. Entrapped Air

The primary cause for air entrapment is uncontrolled, turbulent metal flow. Generally the defect appears as a localized gas defect.

In the same effort of reducing gas defects in steel castings, AG Anderson's engineers and technicians designed gating systems capable of reducing turbulence. A significant change in gating philosophy was adopted. Rigging was designed with smooth transitions. Bottom filling replaced filling at the parting line or top filling. In order to accommodate this type of mould filling, gating systems in three-part mould (two-part drag) were developed.

Figures 3 and 4 show an open impeller moulded according to this concept. This design required that the main runner bar be placed in the bottom part of the drag. This type of moulding yielded excellent results.

Likewise, pressurized gating systems with the choke at the ingates were routinely employed. Main runners were designed to reduce velocity and allow non-metallic inclusions to float. Both cope and drag runners and ingates were used. Ceramic filters were adopted for laminating turbulent flow in addition to their primary function of retaining non-metallic inclusions.

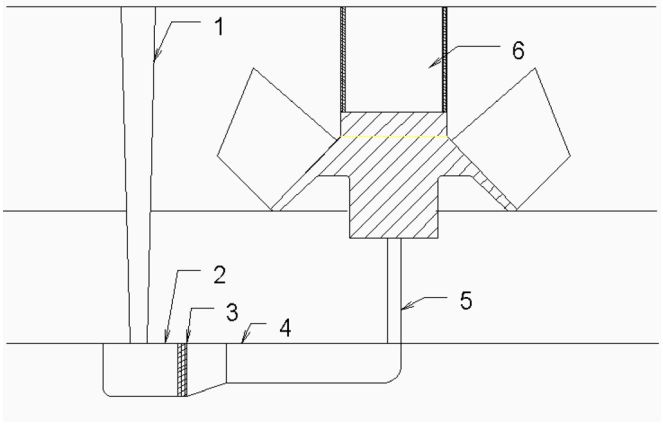

Figure 3 – Bottom filling of a three-part mould.
1.Sprue, 2.Pouring Basin, 3.Filter, 4.Runner Bar, 5.Ingate, 6.Riser

Figure 4 – 2,600 lbs. open impeller made in a three-part mould.
Alloy: CF-3M

Conclusions

The control of detrimental gases in steel castings is indisputably a vital step in producing good quality castings.

Even though gases are more difficult to control in induction melting furnaces than in arc furnaces, continuous efforts to reduce gas related defects in steel castings must be made.

The final deoxidizer, whether titanium or aluminum, is only a part of the solution when gas control in steel castings is concerned. There are many other factors that determine the amount of dissolved gases in steel castings.

This paper has attempted to provide an introduction to the fundamentals of gas absorption and gas control in induction melted steels. The discussed principles of gas removal and gas control in steel castings illustrate the efforts made by AG Anderson's technical group geared to producing defect-free, high quality steel castings.

References

(1) Dr. John M Svoboda, *Melting and Deoxidation of Cast Steels*, Identification and Prevention of Steel Casting Defects course proceedings, July 22 – 23, 1993, Schaumburg, Illinois

(2) G. R. Fitterer, *Active Oxigen Control in Steel*, Identification and Prevention of Steel Casting Defects course proceedings, July 22 – 23, 1993, Schaumburg, Illinois

(3) Christopher F. Pilliod, *Variables Affecting the Nitrogen Content of Carbon and Low Alloy Acid Electric Arc Furnace Steels*, Identification and Prevention of Steel Casting Defects course proceedings, July 22 – 23, 1993, Schaumburg, Illinois

(4) L. J. Heaslip and J. M. Svoboda, *Controlling the Behaviour of Basic Electric Arc Furnace with Oxygen Injection in the Foundry*, AFS – International Conference on Steel Melting and Refining, June 13 – 15, 2000, Rosemont, Illinois

(5) Kenneth W. Murphy, *Understanding Under Riser Cracking*, Identification and Prevention of Steel Casting Defects course proceedings, July 22 – 23, 1993, Schaumburg, Illinois

Contact Bradken to find a solution for your business.

Our Innovation. Your Advantage.

BK-Sales & Marketing- Global-Whitepaper-Control of Oxygen,
Nitrogen and Hydrogen in Induction Melted Steels ©Bradken October 2021

BRADKEN