fabuwood®

Illume

Specifications Guide / Valid until October 2026

Please Note: Items are subject to change without prior notice. This spec book is missing some updated information, so to stay up to date with product specifications and modification options please use our digital spec book which can be found at https://ezpricing.fabuwood.com/specbook

New! Interactive Index

Specbook Updates III
Construction Specifications IV
Q12® VI
Limited Lifetime Warranty VII
Door Styles VIII
Door Styles VIII
Sample Doors XII
Sales Tools XVI
Modifications XVIII
Loose Items XIX

Wall Cabinets 1
12"- 24" High Wall Cabinets 1
12"- 24" High & 24" Deep Wall Cabinets 2
30" High Wall Cabinets 3
36" High Wall Cabinets 5
42" High Wall Cabinets 7
Specialty Wall Cabinets 9
Microwave Wall Cabinets 10
Wine Cabinets 11

Base Cabinets 12
Base Cabinets 12
Drawer Base Cabinets 14
Blind Base Cabinets 15
Corner Base Cabinets 16
Sink Base Cabinets 17
Specialty Base Cabinets 18

Tall Cabinets 22
13" Deep Tall Pantry Cabinets 22
24" Deep Tall Pantry Cabinets 23
Oven Cabinets 24

Vanity Cabinets 28
Vanities 28

Storage Accessories 31
Base Accessories 31
Waste Solutions 33
Wall Accessories 34
Sink Accessories 35

Cabinet Accessories 36
Fillers 36
Columns 37
End Panels 38
Panels 39
Wainscot Panels 40
Moldings (8') 41

Height Alignment Guide 40

Specbook Updates

- **NEW! Sample Door Bag** pg. XVIII
- **NEW! Modifications** pg. XXIII
  - » EDGE BAND: Apply edge band on selected side of panel
  - » INCREASE-PANEL: Increase depth of DWR in 1/4" increments
- **NEW! Wine Cubes** pg.11
- **NEW! DB24-2** pg.14
- **NEW! Cabinet Accessories** pg.28
- **NEW! Floating Shelves** pg.32
- **NEW! Overlay Fillers** pg.38
- **Notice Regarding Illume Customizations** pg. IV
- **Height Alignment Guide** pg. 45

Construction Specifications

Doors and Drawer Fronts:
Doors and drawer fronts in the Illume line feature an MDF core with high-quality Pro Touch Technique lacquered boards and edge-banding in Gloss or Matte Finishes.

Hinges:
BLUM Concealed Clip-On Hinges with BLUMOTION Soft-Close and Quick-Release Technology. Hinges are six-way adjustable and open at 110°. Please note: Lazy Susan, Easy Reach, and Wall Pie Cut cabinets do not feature the soft-close mechanism.

Drawers:
The Illume line includes the BLUM MERIVOBOX Metal Drawer System with an indium gray interior. MERIVOBOX drawers have concealed Full-Extension Slides and Integrated BLUMOTION Soft-Close technology with a 75 lb dynamic load capacity.

Shelving:
3/4" thick Engineered Furniture Board (EFB) shelves, edge-banded in White Linen textured laminate. The adjustable shelves are supported by metal shelf clips. All standard depth base cabinetry includes an 18″ deep adjustable shelf, wall cabinetry 12″ deep adjustable shelves, and tall cabinetry 21″ deep adjustable shelves.

Box:
The Illume line features Cutting-Edge Threespine® Click Technology for a frameless box with tight seams & rigid construction. Sides, top & bottom panels are 3/4" Engineered Furniture Board (EFB) with front edges edge-banded in White Linen Textured Laminate & White Linen Interior. The back panel is 1/4" Medium Density Fiberboard (MDF) with 5/8" thick hanging rails.

Toe Kick:
Adjustable furniture feet included with Base & Tall Cabinets for easy leveling during installation; included are clip-on brackets for toe kick trim attachment.
Matching lengths of Toe Kick are available to purchase separately. Toe Kick is 3/4" Engineered Furniture Board (EFB) with edge-banding on all sides.

Installation Note:
Illume Cabinets are shipped with a protective film on the front face and edge-banding of all Doors, Front Panels, Wainscot Panels, Finished Accessories. Film is recommended to be removed after installation of cabinetry & job site construction is complete.

Notice regarding Illume Customizations:
Any customizations for the Illume Frameless line are manufactured and assembled in our Newark Manufacturing facility and will not include the Threespine® Click Technology.

Construction Specifications

1. 3/4" MDF slab door & drawer front
2. BLUM Concealed Clip-On Hinges with BLUMOTION Soft-Close and Quick-Release Technology. Hinges are six-way adjustable and open at 110°
3. BLUM MERIVOBOX Metal Drawer System with a indium gray interior, 2-5/8" interior drawer height
4. 3/4" Machine Edge-Banding, matches White Linen interiors
5. 1/4" Engineered Furniture Board (EFB) back panel with 5/8" hanging rails, finished with White Linen Textured Laminate
6. 3/4" Engineered Furniture Board (EFB) side panels, finished with White Linen Textured Laminate
   For matching side panels to complement the Door Style Finish, Wainscot Panels are available (purchased separately)
7. 3/4" Engineered Furniture Board (EFB) adjustable shelving, Edge-Banded with White Linen Textured Laminate
8. Black plastic furniture feet*, adjustable from 3-3/4" to 5-3/8"
9. 5-1/2" wide panel beams, front and rear
10. Base cabinet has 18" deep shelves
11. Wall cabinets are 13" deep with 12" interior depth
12. Rubber bumpers for door and drawer fronts.
13. Adjustable shelf clips.

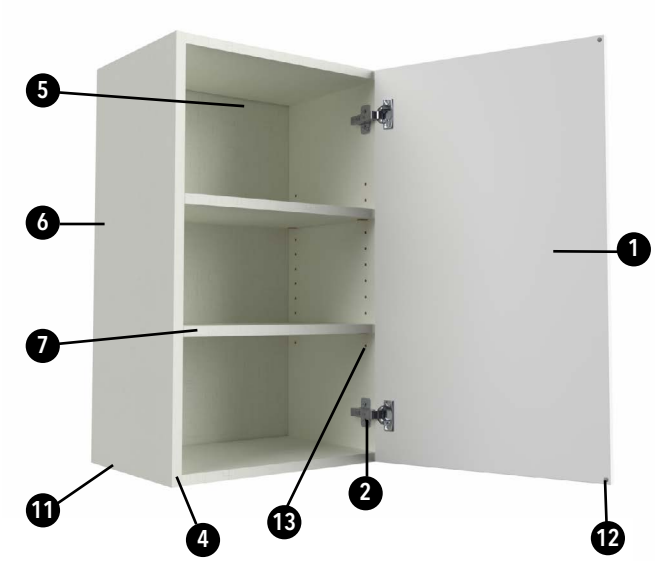

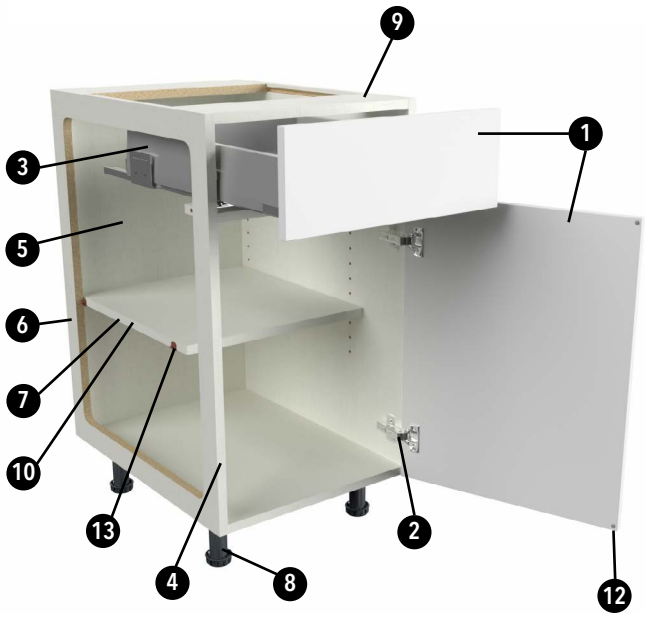

* *Note for Cabinets with Adjustable Furniture Feet:*
The overall height dimensions listed throughout the specbook for these cabinets are ***before*** *installation of the included foot attachment.*

Featuring blum®

Finish Specifications

Gloss Grigio

Gloss Finish

- 18mm thick / MDF / High Gloss Lacquered Surface
- Composed of a high-quality MDF board, pressed with a decorative paper infused with resins and protective elements.
- Top coat consisting of High Gloss Lacquer with UV drying applied to the front face
- Highly Scratch-Resistant: Unique qualities that allow it to be applied in environments with continuous contact of objects.
- High Gloss: Technology offers extraordinary beauty in its reflection and finishes.

Matte Carbone

Matte Finish

- 18mm thick / MDF / Matte Lacquered Surface
- Composed of a high-quality MDF board, pressed with a decorative paper infused with resins and protective elements.
- Top coat consisting of Matte Lacquer with UV curing applied to the front face.
- Silk Touch: Velvet and silk surface texture with extreme softness.
- Anti-Fingerprint: Innovative solution that stands out for its anti-fingerprint properties that prevent finger marks.
- Repair of Superficial Micro-Scratches (Self-Repairing): Technology used allows micro-scratches to be easily repaired.

Como Ash 2

Textured Finish

- 18mm thick / EFB / Resin-Based Coating with Textured Relief Details
- Composed of an Engineered Furniture Board (EFB) base, pressed with a decorative paper infused with resins and protective elements.
- Unique resin formula, for very realistic relief finishes with greater depth of detail.
- Natural-Look Finishes: Surfaces with great beauty, organic feel , and high decorative level.

What exactly defines a Q12 cabinet?

To fully achieve Q12 eligibility, a cabinet must encompass twelve unique standards of quality. Read below to learn more about the twelve fundamental pillars that establish the Q12 qualification:

Q1: CAREFULLY SELECTED ELEMENTS

To ensure the absolute integrity of our product, each element is carefully selected. We start by choosing only "Grade-A" materials and make no compromises along the way.

Q2: PRO-TOUCH TECHNIQUES

Our Allure and Illume cabinets offer high-end finishes that are as beautiful as they are durable and practical. Fabuwood's distinctive pro-touch techniques allow for a sustainable and resilient cabinet finish that is not only easy to clean but will retain its beautiful luster for years.

Q3: ADVANCED CONSTRUCTION

Our Allure Dovetail and Illume Threespine® construction methods are superior, innovative, and built for a lifetime of use. Fabuwood offers cabinets of the utmost strength, on par with the highest industry standards. Our attention to detail, coupled with advanced construction techniques, means a long lasting, superior quality cabinet every time.

Q4: ANTI-WARP STRUCTURES

All our cabinets are engineered in a way that eliminates warping, ensuring the cabinets hold up against elemental pressures. Crafted to perfection, every detailed component is created with unfailing durability. Each cabinet we produce is held to a high standard, ensuring long-lasting reliability.

Q5: METAL SHELF CLIPS

To maintain a maximum level of stability that preserves a shelf's longevity, these metal shelf clips assure sturdiness and durability. With this feature your shelves are sure to stand the test of time.

Q6: TOUGH BACK BUILDS

For superior structural longevity, the back builds on the Allure and Illume series are built tough and easy to install. Our rigorous pressure testing guarantees that our products won't give in.

Q7: FLUSH FIT

To achieve an attractive appearance that is convenient and practical, our Q12 cabinets are built with a flush fit to ensure smooth surfaces and easy in-and-out access.

Q8: UNIQUE INTERIORS

The interior finish of our cabinets is as important as the exterior. Fabuwood offers high end, unique interior finishes for a clean and sophisticated look.

Q9: ONE-CLICK INSTALLATION

In addition to our soft-close action feature, the cutting-edge Blum Compact Clip Hinge allows for lightning-fast one-click installation and release.

Q10: FLUID FULL-EXTENSION

Our cabinets are built with smooth full-extension glides to guarantee an enhanced running action that maximizes its storage to full capacity. Fabuwood manufactures its cabinets with Blum's runners and soft-closing technology, utilizing space while also preventing damage and deterioration.

Q11: EZ LEVEL DRAWER FRONTS

On both framed and frameless products, to achieve an aesthetically graceful balance and ensure proper drawer alignment and function, our cabinets use an effortless system, utilizing a degree of mechanical precision for installing perfectly positioned drawer faces.

Q12: LIMITED LIFETIME WARRANTY

Our integrity-defining limited lifetime warranty is our commitment to quality and excellence. The warranty reflects our pledge to always back our cabinets while delivering an immaculate product. With precise crafting techniques, Q12 cabinets are poised for a lifetime of use.

Limited Lifetime Warranty

COVERAGE OF WARRANTY

Fabuwood Cabinetry Corp. ("Fabuwood") is pleased to provide the following limited warranty to the first residential purchaser on all cabinets sold in the United States and Canada by an authorized Fabuwood dealer. This warranty does not cover cabinets sold or shipped outside of the United States and Canada. A First Residential Purchaser ("First Residential Purchaser") is a person who purchases and installs the cabinets in a dwelling that is owned and used by that person as a primary or secondary home, or, in the case of a developer or builder, this limited warranty may be assigned to the initial purchaser who uses the dwelling as a primary or secondary home. This warranty, however, is not transferable to subsequent owners of the home. This limited warranty is subject to all limitations, exclusions, disclaimers and procedures set forth herein.

LIMITED LIFETIME WARRANTY (Only on Allure, Illume, Value Premium, and Quest series cabinets): Fabuwood warrants to the First Residential Purchaser that all cabinets purchased from Fabuwood will be free from all unnatural defects in material and workmanship in accordance with Fabuwood's Quality Standards under normal residential use as long as the First Residential Purchaser owns the home in which such cabinets are installed.

EXCLUSIONS

THIS WARRANTY SUPERSEDES ANY AND ALL PREVIOUS WARRANTIES BY FABUWOOD AND CONSTITUTES THE EXCLUSIVE REMEDY AGAINST FABUWOOD FOR ALL DEFECTS, DAMAGES AND WORKMANSHIP. THERE ARE NO IMPLIED WARRANTIES EXTENDING BEYOND THE TERMS OF THIS WARRANTY. TO THE MAXIMUM EXTENT PERMITTED BY APPLICABLE LAW, FABUWOOD SHALL NOT BE LIABLE FOR ANY INDIRECT, SPECIAL, PUNITIVE, INCIDENTAL OR CONSEQUENTIAL COSTS, EXPENSES OR DAMAGES (INCLUDING LOST PROFITS), EVEN IF THIS LIMITED LIFETIME WARRANTY IS DEEMED TO HAVE FAILED OF ITS ESSENTIAL PURPOSE. SOME STATES DO NOT ALLOW THE EXCLUSION OR LIMITATION OF INCIDENTAL OR CONSEQUENTIAL DAMAGES, SO THE ABOVE LIMITATION OR EXCLUSION MAY NOT APPLY TO YOU. THIS WARRANTY GIVES YOU SPECIFIC LEGAL RIGHTS, AND YOU MAY ALSO HAVE OTHER RIGHTS, WHICH VARY FROM STATE TO STATE. IT IS POSSIBLE THAT ONE OR MORE OF THE LIMITATIONS AND EXCLUSIONS IN THIS WARRANTY MAY NOT APPLY TO YOU. THE LIMITED LIFETIME WARRANTY ON ALLURE, ILLUME, VALUE PREMIUM AND QUEST SERIES CABINETS APPLIES ONLY TO PRODUCTS PURCHASED ON OR AFTER OCTOBER 1, 2024. VALUE PREMIUM & QUEST SERIES CABINETS PURCHASED PRIOR TO OCTOBER 1, 2024, AND ALLURE & ILLUME SERIES CABINETS PURCHASED BEFORE JANUARY 26, 2023, ARE NOT INCLUDED IN THE LIMITED LIFETIME WARRANTY AND ARE SUBJECT TO FABUWOOD'S LIMITED 5-YEAR WARRANTY.

LIMITATIONS

This warranty shall become void if the cabinets, cabinetwork, drawer slides or hinges are modified from its original form, improperly installed or damaged prior to or during the installation, or used in any way other than for residential purposes. This warranty covers only parts and materials of the cabinets as supplied by Fabuwood. This warranty does not cover any products used or installed in connection with cabinets, such as gas or electric appliances, countertops, or plumbing fixtures. It also does not cover Blum hinges or any other third-party manufactured accessories or enhancements.

This warranty does not apply to products installed in locations that do not maintain year-round environmental controls. This warranty shall not apply to damages caused by transportation, storage, dirt, chemicals, exposure to moisture, humidity or excessive heat or cold, nor does it cover the effects arising from normal wear and tear, misuse, neglect, accidents, alterations, improper use or failure to maintain properly, house settling, or acts of God. No installer, retailer, distributor, agent or employee of Fabuwood has the authority to alter the obligations or limitations in this warranty.

QUALITY STANDARDS

This warranty covers all damages and unnatural defects that are deemed as such under the Fabuwood Quality Standards. The Fabuwood Quality Standards, which will be provided to you by your Fabuwood dealer upon request, should be reviewed at the time a claim for warranty service is being considered. Fabuwood reserves the right to modify or change the Fabuwood Quality Standards at any time without notice.

DISCLAIMERS

The following is a brief recap of some of the characteristics of the wood and finishes on the cabinets you are about to purchase. Please read them carefully. If some of these characteristics concern you, please choose something else. We bring these characteristics to your attention so you will realize that Fabuwood will not be held responsible for these variations in your cabinetry. It is important to note that wood products claimed as defective are most often the result of atmospheric conditions such as excess moisture and humidity. Fabuwood strongly recommends testing the intended location of the products for such conditions prior to installation.

WOOD AND COLOR VARIATIONS: Wood is a product of nature, and since no two trees are alike, cabinets may vary in color, texture and grain. Wood characteristics naturally occurring such as variations in color, grain, mineral streaks, pinholes and knots are not considered defects. Color variations in cabinets are also a natural occurrence due to species, age, character of cabinets, and exposure to UV light, smoke, certain household cleaners, sunlight, extreme temperatures, and other environmental conditions. For these reasons, new and/or replacement cabinets may not match display samples and/or existing cabinets. This may result in overall color variations and is not considered a defect.

WOOD DOORS, DRAWER FRONTS, AND FACE FRAMES: Wood by nature will undergo expansion and contraction movements over the years as it compensates and adjusts to ever changing atmospheric humidity and temperature conditions. It is very common for center panels on doors to shrink, expand or move during these changes. Typically, the panel will return to its normal position within a year once it has adjusted to seasonal changes. It is for these same reasons that it is very common for doors to warp during these periods. Doors that are warped up to ¼" are not considered defective. [Note: It is advisable to check if the door was properly installed, since doors that appear warped are very often the result of improper installation.] Painted doors, drawer fronts, and face frames may eventually have visible cracking around the joint areas, and cabinet colors may darken or lighten over time. These variations are considered to be the nature of the material in relation to their environmental exposure and are not covered under this Limited Lifetime Warranty.

PAINTED FINISHES: Plywood is a non-porous, smooth grained wood. Additionally, wood by nature undergoes periods of expansion and contraction while it adjusts to atmospheric conditions mentioned above. As such, finish stress lines may become visible on painted cabinets especially at the joints. Any such occurrence is not considered a defect.

GLAZED FINISHES: A glazed finish by character is an uneven finish. Some edges and profiles will be larger than others and glazing may vary cabinet to cabinet, door to drawer and item to item. This may result in overall color, texture, and finish variations but these are not considered defects.

WARRANTY PERFORMANCE

If a defect does occur within the terms and conditions of this warranty such defective part will be repaired or replaced by Fabuwood at its sole discretion. Fabuwood will not provide or pay for the cost of removal of defective product, transportation of defective, repaired or replaced product or installation of repaired or replaced product. If it is not commercially feasible to repair or replace a defective product, we may refund the original price paid by you for the defective product or provide a credit towards a similar type of product sold by us. Fabuwood will not be responsible for any shipping damages to the defective, replaced or repaired product. If defective item has been discontinued or is not available at the time, Fabuwood reserves the right to replace the item with the most similar item available in Fabuwood's inventory at that time. Fabuwood reserves the right to alter design, specifications and material without obligation to make similar changes to products previously manufactured. Fabuwood cannot guarantee that the finish of any replacement will exactly match the finish and appearance of the defective item due to the natural ageing process of the wood and finishes of the cabinets. Fabuwood may require at its discretion that the customer submit a clear photo, or that a company representative inspect the item being claimed before honoring this warranty.

CLAIMS

For a warranty claim made by the First Residential Purchaser to be considered, please contact the original Fabuwood-authorized dealer, who must file the claim through the Fabuwood EZ pricing system. In the event that the original dealer cannot be identified, or they have closed down, the warranty claim must be emailed to customerservice@fabuwood.com. The email should explain the issue and include pictures showing the claimed defects. Feel free to call +1 201-432-6555 ext. 1 for assistance.

NOTE

Please do not send back any items to Fabuwood prior to receiving proper Replacement Material Authorization ("RMA") from Warranty Support. Fabuwood takes no responsibility on any items sent back to Fabuwood without proper RMA.

Last Modified October 1, 2024: Change to include Value Premium, and Quest series cabinets under the Limited Lifetime Warranty. Previously Modified January 26, 2023: Change of the warranty on Allure and Illume series cabinets from a Limited 5-year Warranty to the Limited Lifetime Warranty.

Door Styles

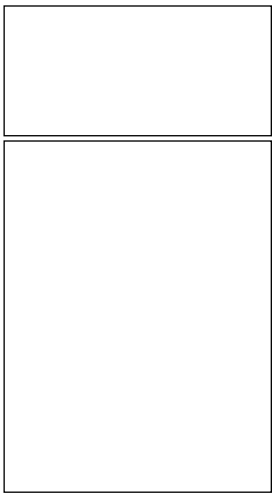

CATALINA

COLOR	FINISH
Bianco (ICBG)	Gloss
Grigio (ICGG)	Gloss
Bianco (ICBM)	Matte
Carbone (ICCM)	Matte
COMO ASH 2	Textured
MURATTI 1	Textured
MURATTI 4	Textured
NOCCE 3	Textured
OLMO 3	Textured
LIGHT ARTWOOD	Textured
SILK FLOW	Textured
CLUBHOUSE OAK	Textured
FERRARA OAK	Textured
NATURAL ELM	Textured
HICKORY ROCK	Textured

CATALINA DESIGNER'S COLLECTION

COLOR	FINISH
COMO ASH 1 (ICDC)	Textured
FRAPPE 1 (ICDC)	Textured
ICE CREAM 1 (ICDC)	Textured
IDA 1 (ICDC)	Textured
IDA 2 (ICDC)	Textured
NOCCE 1 (ICDC)	Textured
ROSALES 1 (ICDC)	Textured
ROSALES 2 (ICDC)	Textured
ROSALES 3 (ICDC)	Textured
WOODLINE 1 (ICDC)	Textured
WOODLINE 3 (ICDC)	Textured
WOODLINE 4 (ICDC)	Textured

- *Full Overlay Slab Door and Drawer Fronts (Euro Overlay with Frameless Box)*
- *Blum Clip-On Hinges with Blumotion Soft-Close and Quick-Release Technology (Blum Model#71B358E)*
- *MERIVOBOX Full-Extension Metal Drawer System with Blumotion Concealed Runners*
- *Wood grain textures are not pattern matched*

Door Styles

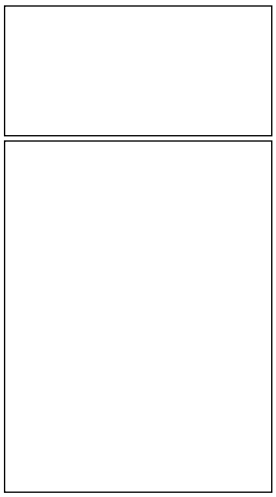

CATALINA DESIGNER'S COLLECTION CONT.

COLOR	FINISH
AGUA MARINA (ICDC)	Gloss
AZUL INDIGO (ICDC)	Gloss
AZUL MARINO (ICDC)	Gloss
BLACK (ICDC)	Gloss
BLANCO (ICDC)	Gloss
CASHMERE (ICDC)	Gloss
EUROLINE (ICDC)	Gloss
GRIS NUBE (ICDC)	Gloss
GUAYANA (ICDC)	Gloss
METALLO 1 (ICDC)	Gloss
METALLO 4 (ICDC)	Gloss
OLIVO (ICDC)	Gloss
TEXTIL PLATA (ICDC)	Gloss
AGUA MARINA (ICDC)	Matte
ANTRACITA (ICDC)	Matte
AZUL INDIGO (ICDC)	Matte
AZUL MARINO (ICDC)	Matte
BASALTO (ICDC)	Matte
BLACK (ICDC)	Matte
BLANCO (ICDC)	Matte
CASHMERE (ICDC)	Matte
GRIS PLOMO (ICDC)	Matte
VERDE SALVIA (ICDC)	Matte

- *Full Overlay Slab Door and Drawer Fronts (Euro Overlay with Frameless Box)*
- *Blum Clip-On Hinges with Blumotion Soft-Close and Quick-Release Technology (Blum Model#71B358E)*
- *MERIVOBOX Full-Extension Metal Drawer System with Blumotion Concealed Runners*
- *Wood grain textures are not pattern matched*

Door Styles

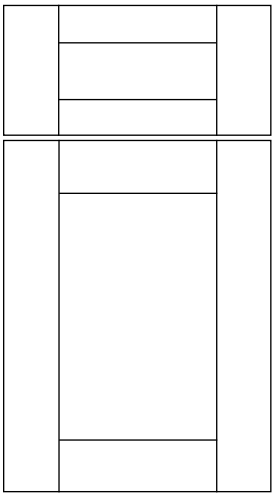

TUSCANY DESIGNER'S COLLECTION

COLOR	FINISH
COMO ASH 1 (ITDC)	Textured
COMO ASH 2 (ITDC)	Textured
FRAPPE 1 (ITDC)	Textured
IDA 1 (ITDC)	Textured
IDA 2 (ITDC)	Textured
MURATTI 1 (ITDC)	Textured
MURATTI 4 (ITDC)	Textured
NOCCE 1 (ITDC)	Textured
NOCCE 3 (ITDC)	Textured
OLMO 3 (ITDC)	Textured
ROSALES 1 (ITDC)	Textured
ROSALES 2 (ITDC)	Textured
ROSALES 3 (ITDC)	Textured
WOODLINE 1 (ITDC)	Textured
WOODLINE 3 (ITDC)	Textured
LIGHT ARTWOOD	Textured
SILK FLOW	Textured
CLUBHOUSE OAK	Textured
FERRARA OAK	Textured
NATURAL ELM	Textured
HICKORY ROCK	Textured
ANTRACITA (ITDC)	Matte
AZUL INDIGO (ITDC)	Matte
AZUL MARINO (ITDC)	Matte
BASALTO (ITDC)	Matte
BLANCO (ITDC)	Matte
CASHMERE (ITDC)	Matte

- *Full Overlay 5-Piece & matching 5-piece Drawer Fronts (Euro Overlay with Frameless Box)*
- *Blum Clip-On Hinges with Blumotion Soft-Close and Quick-Release Technology (Blum Model#71B358E)*
- *MERIVOBOX Full-Extension Metal Drawer System with Blumotion Concealed Runners*
- *Wood grain textures are not pattern matched*

Sample Doors

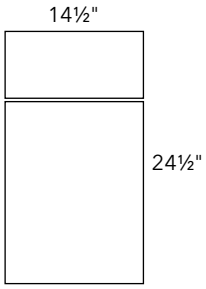

CATALINA DOOR SAMPLES WITH DRAWER FRONT

ITEM	DESCRIPTION
SDICBG	CATALINA BIANCO GLOSS SAMPLE DOOR
SDICGG	CATALINA GRIGIO GLOSS SAMPLE DOOR
SDICBM	CATALINA BIANCO MATTE SAMPLE DOOR
SDICCM	CATALINA CARBONE MATTE SAMPLE DOOR
SDICC2	CATALINA COMO ASH 2 SAMPLE DOOR
SDICM1	CATALINA MURATTI 1 SAMPLE DOOR
SDICM4	CATALINA MURATTI 4 SAMPLE DOOR
SDICN3	CATALINA NOCCE 3 SAMPLE DOOR
SDICO3	CATALINA OLMO 3 SAMPLE DOOR
SDIC COMO ASH 1	CATALINA COMO ASH 1 SAMPLE DOOR
SDIC FRAPPE 1	CATALINA FRAPPE 1 SAMPLE DOOR
SDIC ICE CREAM 1	CATALINA ICECREAM 1 SAMPLE DOOR
SDIC IDA 1	CATALINA IDA 1 SAMPLE DOOR
SDIC IDA 2	CATALINA IDA 2 SAMPLE DOOR
SDIC NOCCE 1	CATALINA NOCCE 1 SAMPLE DOOR
SDIC ROSALES 1	CATALINA ROSALES 1 SAMPLE DOOR
SDIC ROSALES 2	CATALINA ROSALES 2 SAMPLE DOOR
SDIC ROSALES 3	CATALINA ROSALES 3 SAMPLE DOOR
SDIC WOODLINE 1	CATALINA WOODLINE 1 SAMPLE DOOR
SDIC WOODLINE 3	CATALINA WOODLINE 3 SAMPLE DOOR
SDIC WOODLINE 4	CATALINA WOODLINE 4 SAMPLE DOOR
SDIC AGUA MARINA G	CATALINA AGUA MARINA GLOSS SAMPLE DOOR
SDIC AZUL INDIGO G	CATALINA AZUL INDIGO GLOSS SAMPLE DOOR
SDIC AZUL MARINO G	CATALINA AZUL MARINO GLOSS SAMPLE DOOR
SDIC BLACK G	CATALINA BLACK GLOSS SAMPLE DOOR
SDIC BLANCO G	CATALINA BLANCO GLOSS SAMPLE DOOR
SDIC CASHMERE G	CATALINA CASHMERE GLOSS SAMPLE DOOR
SDIC EUROLINE G	CATALINA EUROLINE GLOSS SAMPLE DOOR
SDIC GRIS NUBE G	CATALINA GRIS NUBE GLOSS SAMPLE DOOR
SDIC GUAYANA G	CATALINA GUAYANA GLOSS SAMPLE DOOR
SDIC METALLO 1 G	CATALINA METALLO 1 GLOSS SAMPLE DOOR
SDIC METALLO 4 G	CATALINA METALLO 4 GLOSS SAMPLE DOOR
SDIC OLIVO G	CATALINA OLIVO GLOSS SAMPLE DOOR
SDIC TEXTIL PLATA G	CATALINA TEXTIL PLATA GLOSS SAMPLE DOOR
SDIC AGUA MARINA M	CATALINA AGUA MARINA MATTE SAMPLE DOOR
SDIC ANTRACITA M	CATALINA ANTRACITA MATTE SAMPLE DOOR
SDIC AZUL INDIGO M	CATALINA AZUL INDIGO MATTE SAMPLE DOOR
SDIC AZUL MARINO M	CATALINA AZUL MARINO MATTE SAMPLE DOOR
SDIC BASALTO M	CATALINA BASALTO MATTE SAMPLE DOOR
SDIC BLACK M	CATALINA BLACK MATTE SAMPLE DOOR
SDIC BLANCO M	CATALINA BLANCO MATTE SAMPLE DOOR
SDIC CASHMERE M	CATALINA CASHMERE MATTE SAMPLE DOOR
SDIC GRIS PLOMO M	CATALINA GRIS PLOMO MATTE SAMPLE DOOR
SDIC VERDE SALVIA M	CATALINA VERDE SALVIA MATTE SAMPLE DOOR

Pricing Note: Sales Tools are NET pricing; virtual multiplier applies to these items. Final price listed on Quote/Order will reflect the virtual multiplier.

Sample Doors

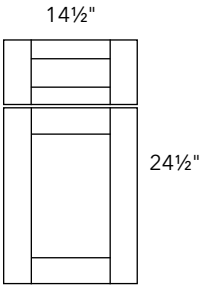

TUSCANY DOOR SAMPLES WITH DRAWER FRONT

ITEM	DESCRIPTION
SDIT COMO ASH 1	TUSCANY COMO ASH 1 SAMPLE DOOR
SDIT COMO ASH 2	TUSCANY COMO ASH 2 SAMPLE DOOR
SDIT FRAPPE 1	TUSCANY FRAPPE 1 SAMPLE DOOR
SDIT IDA 1	TUSCANY IDA 1 SAMPLE DOOR
SDIT IDA 2	TUSCANY IDA 2 SAMPLE DOOR
SDIT MURATTI 1	TUSCANY MURATTI 1 SAMPLE DOOR
SDIT MURATTI 4	TUSCANY MURATTI 4 SAMPLE DOOR
SDIT NOCCE 1	TUSCANY NOCCE 1 SAMPLE DOOR
SDIT NOCCE 3	TUSCANY NOCCE 3 SAMPLE DOOR
SDIT OLMO 3	TUSCANY OLMO 3 SAMPLE DOOR
SDIT ROSALES 2	TUSCANY ROSALES 2 SAMPLE DOOR
SDIT ROSALES 3	TUSCANY ROSALES 3 SAMPLE DOOR
SDIT WOODLINE 1	TUSCANY WOODLINE 1 SAMPLE DOOR
SDIT WOODLINE 3	TUSCANY WOODLINE 3 SAMPLE DOOR
SDIT ANTRACITA M	TUSCANY ANTRACITA MATTE SAMPLE DOOR
SDIT AZUL INDIGO M	TUSCANY AZUL INDIGO MATTE SAMPLE DOOR
SDIT AZUL MARINO M	TUSCANY AZUL MARINO MATTE SAMPLE DOOR
SDIT BASALTO M	TUSCANY BASALTO MATTE SAMPLE DOOR
SDIT BLANCO M	TUSCANY BLANCO MATTE SAMPLE DOOR
SDIT CASHMERE M	TUSCANY CASHMERE MATTE SAMPLE DOOR
SDIT VERDE SALVIA M	TUSCANY VERDE SALVIA MATTE SAMPLE DOOR

Pricing Note: Sales Tools are NET pricing; virtual multiplier applies to these items. Final price listed on Quote/Order will reflect the virtual multiplier.

Sample Doors

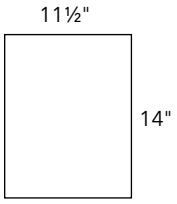

CATALINA SMALL DOOR SAMPLES

ITEM	DESCRIPTION
SDICBG-2	CATALINA BIANCO GLOSS SAMPLE DOOR 11 1/2" X 14"
SDICGG-2	CATALINA GRIGIO GLOSS SAMPLE DOOR 11 1/2" X 14"
SDICBM-2	CATALINA BIANCO MATTE SAMPLE DOOR 11 1/2" X 14"
SDICCM-2	CATALINA CARBONE MATTE SAMPLE DOOR 11 1/2" X 14"
SDICC2-2	CATALINA COMO ASH 2 SAMPLE DOOR 11 1/2" X 14"
SDICM1-2	CATALINA MURATTI 1 SAMPLE DOOR 11 1/2" X 14"
SDICM4-2	CATALINA MURATTI 4 SAMPLE DOOR 11 1/2" X 14"
SDICN3-2	CATALINA NOCCE 3 SAMPLE DOOR 11 1/2" X 14"
SDICO3-2	CATALINA OLMO 3 SAMPLE DOOR 11 1/2" X 14"
SDIC-2 COMO ASH 1	CATALINA COMO ASH 1 SAMPLE DOOR 11 1/2" X 14"
SDIC-2 FRAPPE 1	CATALINA FRAPPE 1 SAMPLE DOOR 11 1/2" X 14"
SDIC-2 ICE CREAM 1	CATALINA ICECREAM 1 SAMPLE DOOR 11 1/2" X 14"
SDIC-2 IDA 1	CATALINA IDA 1 SAMPLE DOOR 11 1/2" X 14"
SDIC-2 IDA 2	CATALINA IDA 2 SAMPLE DOOR 11 1/2" X 14"
SDIC-2 NOCCE 1	CATALINA NOCCE 1 SAMPLE DOOR 11 1/2" X 14"
SDIC-2 ROSALES 1	CATALINA ROSALES 1 SAMPLE DOOR 11 1/2" X 14"
SDIC-2 ROSALES 2	CATALINA ROSALES 2 SAMPLE DOOR 11 1/2" X 14"
SDIC-2 ROSALES 3	CATALINA ROSALES 3 SAMPLE DOOR 11 1/2" X 14"
SDIC-2 WOODLINE 1	CATALINA WOODLINE 1 SAMPLE DOOR 11 1/2" X 14"
SDIC-2 WOODLINE 3	CATALINA WOODLINE 3 SAMPLE DOOR 11 1/2" X 14"
SDIC-2 WOODLINE 4	CATALINA WOODLINE 4 SAMPLE DOOR 11 1/2" X 14"
SDIC-2 AGUA MARINA G	CATALINA AGUA MARINA GLOSS SAMPLE DOOR 11 1/2" X 14"
SDIC-2 AZUL INDIGO G	CATALINA AZUL INDIGO GLOSS SAMPLE DOOR 11 1/2" X 14"
SDIC-2 AZUL MARINO G	CATALINA AZUL MARINO GLOSS SAMPLE DOOR 11 1/2" X 14"
SDIC-2 BLACK G	CATALINA BLACK GLOSS SAMPLE DOOR 11 1/2" X 14"
SDIC-2 BLANCO G	CATALINA BLANCO GLOSS SAMPLE DOOR 11 1/2" X 14"
SDIC-2 CASHMERE G	CATALINA CASHMERE GLOSS SAMPLE DOOR 11 1/2" X 14"
SDIC-2 EUROLINE G	CATALINA EUROLINE GLOSS SAMPLE DOOR 11 1/2" X 14"
SDIC-2 GRIS NUBE G	CATALINA GRIS NUBE GLOSS SAMPLE DOOR 11 1/2" X 14"
SDIC-2 GUAYANA G	CATALINA GUAYANA GLOSS SAMPLE DOOR 11 1/2" X 14"
SDIC-2 METALLO 1 G	CATALINA METALLO 1 GLOSS SAMPLE DOOR 11 1/2" X 14"
SDIC-2 METALLO 4 G	CATALINA METALLO 4 GLOSS SAMPLE DOOR 11 1/2" X 14"
SDIC-2 OLIVO G	CATALINA OLIVO GLOSS SAMPLE DOOR 11 1/2" X 14"
SDIC-2 TEXTIL PLATA G	CATALINA TEXTIL PLATA GLOSS SAMPLE DOOR 11 1/2" X 14"
SDIC-2 AGUA MARINA M	CATALINA AGUA MARINA MATTE SAMPLE DOOR 11 1/2" X 14"
SDIC-2 ANTRACITA M	CATALINA ANTRACITA MATTE SAMPLE DOOR 11 1/2" X 14"
SDIC-2 AZUL INDIGO M	CATALINA AZUL INDIGO MATTE SAMPLE DOOR 11 1/2" X 14"
SDIC-2 AZUL MARINO M	CATALINA AZUL MARINO MATTE SAMPLE DOOR 11 1/2" X 14"
SDIC-2 BASALTO M	CATALINA BASALTO MATTE SAMPLE DOOR 11 1/2" X 14"
SDIC-2 BLACK M	CATALINA BLACK MATTE SAMPLE DOOR 11 1/2" X 14"
SDIC-2 BLANCO M	CATALINA BLANCO MATTE SAMPLE DOOR 11 1/2" X 14"
SDIC-2 CASHMERE M	CATALINA CASHMERE MATTE SAMPLE DOOR 11 1/2" X 14"
SDIC-2 GRIS PLOMO M	CATALINA GRIS PLOMO MATTE SAMPLE DOOR 11 1/2" X 14"
SDIC-2 VERDE SALVIA M	CATALINA VERDE SALVIA MATTE SAMPLE DOOR 11 1/2" X 14"

Pricing Note: Sales Tools are NET pricing; virtual multiplier applies to these items. Final price listed on Quote/Order will reflect the virtual multiplier.

Sample Doors

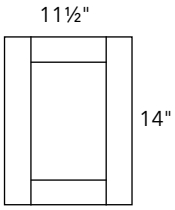

TUSCANY SMALL DOOR SAMPLES

ITEM	DESCRIPTION
SDIT-2 COMO ASH 1	TUSCANY COMO ASH 1 SAMPLE DOOR 11 1/2" X 14"
SDIT-2 COMO ASH 2	TUSCANY COMO ASH 2 SAMPLE DOOR 11 1/2" X 14"
SDIT-2 FRAPPE 1	TUSCANY FRAPPE 1 SAMPLE DOOR 11 1/2" X 14"
SDIT-2 IDA 1	TUSCANY IDA 1 SAMPLE DOOR 11 1/2" X 14"
SDIT-2 IDA 2	TUSCANY IDA 2 SAMPLE DOOR 11 1/2" X 14"
SDIT-2 MURATTI 1	TUSCANY MURATTI 1 SAMPLE DOOR 11 1/2" X 14"
SDIT-2 MURATTI 4	TUSCANY MURATTI 4 SAMPLE DOOR 11 1/2" X 14"
SDIT-2 NOCCE 1	TUSCANY NOCCE 1 SAMPLE DOOR 11 1/2" X 14"
SDIT-2 NOCCE 3	TUSCANY NOCCE 3 SAMPLE DOOR 11 1/2" X 14"
SDIT-2 OLMO 3	TUSCANY OLMO 3 SAMPLE DOOR 11 1/2" X 14"
SDIT-2 ROSALES 2	TUSCANY ROSALES 2 SAMPLE DOOR 11 1/2" X 14"
SDIT-2 ROSALES 3	TUSCANY ROSALES 3 SAMPLE DOOR 11 1/2" X 14"
SDIT-2 WOODLINE 1	TUSCANY WOODLINE 1 SAMPLE DOOR 11 1/2" X 14"
SDIT-2 WOODLINE 3	TUSCANY WOODLINE 3 SAMPLE DOOR 11 1/2" X 14"
SDIT-2 ANTRACITA M	TUSCANY ANTRACITA MATTE SAMPLE DOOR 11 1/2" X 14"
SDIT-2 AZUL INDIGO M	TUSCANY AZUL INDIGO MATTE SAMPLE DOOR 11 1/2" X 14"
SDIT-2 AZUL MARINO M	TUSCANY AZUL MARINO MATTE SAMPLE DOOR 11 1/2" X 14"
SDIT-2 BASALTO M	TUSCANY BASALTO MATTE SAMPLE DOOR 11 1/2" X 14"
SDIT-2 BLANCO M	TUSCANY BLANCO MATTE SAMPLE DOOR 11 1/2" X 14"
SDIT-2 CASHMERE M	TUSCANY CASHMERE MATTE SAMPLE DOOR 11 1/2" X 14"
SDIT-2 VERDE SALVIA M	TUSCANY VERDE SALVIA MATTE SAMPLE DOOR 11 1/2" X 14"

Pricing Note: Sales Tools are NET pricing; virtual multiplier applies to these items. Final price listed on Quote/Order will reflect the virtual multiplier.

Sample Doors

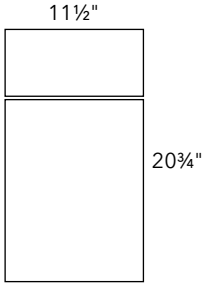

CATALINA MEDIUM DOOR SAMPLES WITH DRAWER FRONT

ITEM	DESCRIPTION
SDICBG-3	CATALINA BIANCO GLOSS SAMPLE DOOR 11 1/2" X 20"
SDICGG-3	CATALINA GRIGIO GLOSS SAMPLE DOOR 11 1/2" X 20"
SDICBM-3	CATALINA BIANCO MATTE SAMPLE DOOR 11 1/2" X 20"
SDICCM-3	CATALINA CARBONE MATTE SAMPLE DOOR 11 1/2" X 20"
SDICC2-3	CATALINA COMO ASH 2 SAMPLE DOOR 11 1/2" X 20"
SDICM1-3	CATALINA MURATTI 1 SAMPLE DOOR 11 1/2" X 20"
SDICM4-3	CATALINA MURATTI 4 SAMPLE DOOR 11 1/2" X 20"
SDICN3-3	CATALINA NOCCE 3 SAMPLE DOOR 11 1/2" X 20"
SDICO3-3	CATALINA OLMO 3 SAMPLE DOOR 11 1/2" X 20"
SDIC-3 COMO ASH 1	CATALINA COMO ASH 1 SAMPLE DOOR 11 1/2" X 20"
SDIC-3 FRAPPE 1	CATALINA FRAPPE 1 SAMPLE DOOR 11 1/2" X 20"
SDIC-3 ICE CREAM 1	CATALINA ICECREAM 1 SAMPLE DOOR 11 1/2" X 20"
SDIC-3 IDA 1	CATALINA IDA 1 SAMPLE DOOR 11 1/2" X 20"
SDIC-3 IDA 2	CATALINA IDA 2 SAMPLE DOOR 11 1/2" X 20"
SDIC-3 NOCCE 1	CATALINA NOCCE 1 SAMPLE DOOR 11 1/2" X 20"
SDIC-3 ROSALES 1	CATALINA ROSALES 1 SAMPLE DOOR 11 1/2" X 20"
SDIC-3 ROSALES 2	CATALINA ROSALES 2 SAMPLE DOOR 11 1/2" X 20"
SDIC-3 ROSALES 3	CATALINA ROSALES 3 SAMPLE DOOR 11 1/2" X 20"
SDIC-3 WOODLINE 1	CATALINA WOODLINE 1 SAMPLE DOOR 11 1/2" X 20"
SDIC-3 WOODLINE 3	CATALINA WOODLINE 3 SAMPLE DOOR 11 1/2" X 20"
SDIC-3 WOODLINE 4	CATALINA WOODLINE 4 SAMPLE DOOR 11 1/2" X 20"
SDIC-3 AGUA MARINA G	CATALINA AGUA MARINA GLOSS SAMPLE DOOR 11 1/2" X 20"
SDIC-3 AZUL INDIGO G	CATALINA AZUL INDIGO GLOSS SAMPLE DOOR 11 1/2" X 20"
SDIC-3 AZUL MARINO G	CATALINA AZUL MARINO GLOSS SAMPLE DOOR 11 1/2" X 20"
SDIC-3 BLACK G	CATALINA BLACK GLOSS SAMPLE DOOR 11 1/2" X 20"
SDIC-3 BLANCO G	CATALINA BLANCO GLOSS SAMPLE DOOR 11 1/2" X 20"
SDIC-3 CASHMERE G	CATALINA CASHMERE GLOSS SAMPLE DOOR 11 1/2" X 20"
SDIC-3 EUROLINE G	CATALINA EUROLINE GLOSS SAMPLE DOOR 11 1/2" X 20"
SDIC-3 GRIS NUBE G	CATALINA GRIS NUBE GLOSS SAMPLE DOOR 11 1/2" X 20"
SDIC-3 GUAYANA G	CATALINA GUAYANA GLOSS SAMPLE DOOR 11 1/2" X 20"
SDIC-3 METALLO 1 G	CATALINA METALLO 1 GLOSS SAMPLE DOOR 11 1/2" X 20"
SDIC-3 METALLO 4 G	CATALINA METALLO 4 GLOSS SAMPLE DOOR 11 1/2" X 20"
SDIC-3 OLIVO G	CATALINA OLIVO GLOSS SAMPLE DOOR 11 1/2" X 20"
SDIC-3 TEXTIL PLATA G	CATALINA TEXTIL PLATA GLOSS SAMPLE DOOR 11 1/2" X 20"
SDIC-3 AGUA MARINA M	CATALINA AGUA MARINA MATTE SAMPLE DOOR 11 1/2" X 20"
SDIC-3 ANTRACITA M	CATALINA ANTRACITA MATTE SAMPLE DOOR 11 1/2" X 20"
SDIC-3 AZUL INDIGO M	CATALINA AZUL INDIGO MATTE SAMPLE DOOR 11 1/2" X 20"
SDIC-3 AZUL MARINO M	CATALINA AZUL MARINO MATTE SAMPLE DOOR 11 1/2" X 20"
SDIC-3 BASALTO M	CATALINA BASALTO MATTE SAMPLE DOOR 11 1/2" X 20"
SDIC-3 BLACK M	CATALINA BLACK MATTE SAMPLE DOOR 11 1/2" X 20"
SDIC-3 BLANCO M	CATALINA BLANCO MATTE SAMPLE DOOR 11 1/2" X 20"
SDIC-3 CASHMERE M	CATALINA CASHMERE MATTE SAMPLE DOOR 11 1/2" X 20"
SDIC-3 GRIS PLOMO M	CATALINA GRIS PLOMO MATTE SAMPLE DOOR 11 1/2" X 20"
SDIC-3 VERDE SALVIA M	CATALINA VERDE SALVIA MATTE SAMPLE DOOR 11 1/2" X 20"

Pricing Note: Sales Tools are NET pricing; virtual multiplier applies to these items. Final price listed on Quote/Order will reflect the virtual multiplier.

Sample Doors

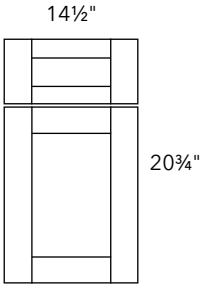

TUSCANY MEDIUM DOOR SAMPLES WITH DRAWER FRONT

ITEM	DESCRIPTION
SDIT-3 COMO ASH 1	TUSCANY COMO ASH 1 SAMPLE DOOR 11 1/2" X 20"
SDIT-3 COMO ASH 2	TUSCANY COMO ASH 2 SAMPLE DOOR 11 1/2" X 20"
SDIT-3 FRAPPE 1	TUSCANY FRAPPE 1 SAMPLE DOOR 11 1/2" X 20"
SDIT-3 IDA 1	TUSCANY IDA 1 SAMPLE DOOR 11 1/2" X 20"
SDIT-3 IDA 2	TUSCANY IDA 2 SAMPLE DOOR 11 1/2" X 20"
SDIT-3 MURATTI 1	TUSCANY MURATTI 1 SAMPLE DOOR 11 1/2" X 20"
SDIT-3 MURATTI 4	TUSCANY MURATTI 4 SAMPLE DOOR 11 1/2" X 20"
SDIT-3 NOCCE 1	TUSCANY NOCCE 1 SAMPLE DOOR 11 1/2" X 20"
SDIT-3 NOCCE 3	TUSCANY NOCCE 3 SAMPLE DOOR 11 1/2" X 20"
SDIT-3 OLMO 3	TUSCANY OLMO 3 SAMPLE DOOR 11 1/2" X 20"
SDIT-3 ROSALES 2	TUSCANY ROSALES 2 SAMPLE DOOR 11 1/2" X 20"
SDIT-3 ROSALES 3	TUSCANY ROSALES 3 SAMPLE DOOR 11 1/2" X 20"
SDIT-3 WOODLINE 1	TUSCANY WOODLINE 1 SAMPLE DOOR 11 1/2" X 20"
SDIT-3 WOODLINE 3	TUSCANY WOODLINE 3 SAMPLE DOOR 11 1/2" X 20"
SDIT-3 ANTRACITA M	TUSCANY ANTRACITA MATTE SAMPLE DOOR 11 1/2" X 20"
SDIT-3 AZUL INDIGO M	TUSCANY AZUL INDIGO MATTE SAMPLE DOOR 11 1/2" X 20"
SDIT-3 AZUL MARINO M	TUSCANY AZUL MARINO MATTE SAMPLE DOOR 11 1/2" X 20"
SDIT-3 BASALTO M	TUSCANY BASALTO MATTE SAMPLE DOOR 11 1/2" X 20"
SDIT-3 BLANCO M	TUSCANY BLANCO MATTE SAMPLE DOOR 11 1/2" X 20"
SDIT-3 CASHMERE M	TUSCANY CASHMERE MATTE SAMPLE DOOR 11 1/2" X 20"
SDIT-3 VERDE SALVIA M	TUSCANY VERDE SALVIA MATTE SAMPLE DOOR 11 1/2" X 20"

Pricing Note: Sales Tools are NET pricing; virtual multiplier applies to these items. Final price listed on Quote/Order will reflect the virtual multiplier.

Sales Tools

ILLUME MINI BASE SAMPLE

ITEM	DESCRIPTION
ICBG MBS	Illume Catalina Bianco Gloss Mini Base Sample

- *Available in Catalina Bianco Gloss only*
- *Mini Base Dimensions: 12"W x 21"H x 15"D*
- *Mini Base is 21"H before attaching Adjustable Furniture Feet*

METAL GLASS DOOR SALES TOOL KIT

ITEM	DESCRIPTION
METAL GLASS DOOR SALES KIT	METAL GLASS DOOR SALES TOOL KIT W/ SAMPLES

- *Sales kit includes four metal finishes, four unique profiles, and four glass color insert options.*
  - *Metal Finishes: Onyx (Black Matte), Natural Aluminum, Brushed Stainless, and Gold.*
  - *Profiles: FAB003, FAB004, FAB014, FAB017*
  - *Glass Insert Colors: Clear, Satin, Bronze Clear, Grey Clear*

SAMPLE DOOR BAG

ITEM	DESCRIPTION
SAMPLE DOOR BAG	PADDED SAMPLE DOOR BAG

- *Accommodates 4 large sample doors*

Pricing Note: Sales Tools are NET pricing; virtual multiplier applies to these items. Final price listed on Quote/Order will reflect the virtual multiplier.

Sales Tools

Shown with SD

SAMPLE DOOR STAND

ITEM	DESCRIPTION
SAMPLE DOOR STAND	SAMPLE DOOR DISPLAY STAND

- *Stand can be easily unassembled and re-assembled for storage or portability to trade shows*
- *Sample Door Display stand can hold up to nine sample doors*
- *Will accommodate sizing for all door styles*

Shown with SD-2

SAMPLE TOWER

ITEM	DESCRIPTION
IDC SAMPLE SET	ILLUME DESIGNER SAMPLE TOWER

- *Black Metal Frame with Illume Logo Sign*
- *Includes 40 (6"x12"x3/4") Illume Designer Collection sample blocks*

Pricing Note: Sales Tools are NET pricing; virtual multiplier applies to these items. Final price listed on Quote/Order will reflect the virtual multiplier.

Sales Tools

SELLING CENTER

ITEM	DESCRIPTION
DEALER SELLING CENTER	FABUWOOD SELLING CENTER
ACRYLIC LOGO 38X8	FABUWOOD ACRYLIC LOGO DISPLAY SIGN

Fabuwood Selling Center Display comes with:
- *three (3) Base Cabinets, 12"W x 16" x*
- *FSC B12 include the following finishes: Illume Catalina Bianco Gloss, Allure Galaxy Nickel, & Quest Discovery Frost*
- *Full set of Large Sample Doors*
- *One of each molding chain for Allure, Quest*
- *Includes one Box set each of Color Blocks and Designer Collection Color Blocks*
- *Digital Brochure Keychains (Pack of 25)*
- *Pack of 25 Style Guide Brochures*
- *Acrylic Logo Sign included and available for seperate purchase*

Fabuwood Logo Sign:
- *Now available as a stand-alone item for endless display options. Hang our sign amongst a gallery wall of Fabuwood Sample Doors, or pair with a Fabuwood vignette to create a unique Selling Center tailored to your individual showroom style.*
- *Acrylic sign predrilled with decorative chrome plated standoffs included.*

SELLING STUDIO

ITEM	DESCRIPTION
DEALER SELLING STUDIO	FABUWOOD SELLING STUDIO

Fabuwood Selling Studio Display includes:
- *Interactive Touch Monitor*
- *32 Medium-Size Sample Doors*
- *18 Mini Sample Doors*
- *Molding Chains in Allure & Quest*
- *Color Block Sets for Signature, Designer Collection & Illume*
- *Style Guide Brochures (Pack of 25)*
- *Wall and Base Mini Cabinets in Illume and Allure Constructions*
- *Fabuwood Logo Windows*
- *Remote Control Operated Lift-Up Top Door*
- *Storage Drawer*

Custom Base Cabinets:
- *(1) 18" Drawer Base Cabinet with a modified depth of 18"*
- *(2) 18" Base Cabinet with a modified depth of 18"*

Pricing Note: Sales Tools are NET pricing; virtual multiplier applies to these items. Final price listed on Quote/Order will reflect the virtual multiplier.

Sales Tools

COLOR BLOCKS

ITEM	DESCRIPTION
ILLUME COLOR BLOCK	BOX OF COLOR BLOCKS FOR ILLUME
CS-BIANCO GLOSS	BIANCO GLOSS LOOSE COLOR BLOCK
CS-BIANCO MATTE	BIANCO MATTE LOOSE COLOR BLOCK
CS-GRIGIO GLOSS	GRIGIO GLOSS LOOSE COLOR BLOCK
CS-CARBONE MATTE	CARBONE MATTE LOOSE COLOR BLOCK

Illume Color Block:
- *Set of 4 Illume Color Blocks: Bianco Matte, Bianco Gloss, Carbone Matte, Grigio Gloss*

SAMPLE PACKAGES

ITEM	DESCRIPTION
SMALL SAMPLE PACKAGE	SMALL SAMPLE PACKAGE
DEALER PACKAGE	LITERATURE AND ACCESSORIES

Small Sample Package:
- *Full Set of Small Sample Doors (door is 11-1/2" x 14"H)*

Dealer Package:
- *Full set of Large Sample Doors (includes Door & Drawer Front)*
- *One of each molding chain for Allure, Quest*
- *Box of Color Blocks*
- *Digital Brochure Keychains (Pack of 25)*

DIGITAL BROCHURE

ITEM	DESCRIPTION
DIGITAL BROCHURE QR	QR CODE KEY RING

- *Pack of 25 Key Rings*

Pricing Note: Sales Tools are NET pricing; virtual multiplier applies to these items. Final price listed on Quote/Order will reflect the virtual multiplier.

Sales Tools

STYLE GUIDE

ITEM	DESCRIPTION
SG25	STYLE GUIDE BROCHURE 2025 (25PK)

- *80 pages, 8" x 8"*
- *Fabuwood's Style Guide showcases an extensive range of customizations and design possibilities. Featuring hoods, vanities, door styles, color collections, and more, it offers everything needed to create unique and personalized spaces*

ACCESSORY BROCHURE

ITEM	DESCRIPTION
ACCESSORY BROCHURE	ACCESSORY BROCHURE (PACK OF 25)

- *28 pages, 8-1/2" x 11"*
- *Fabuwood's Accessory Brochure*

CUSTOMIZATION BROCHURE

ITEM	DESCRIPTION
CUSTOMIZATION BROCHURE	CUSTOMIZATION BROCHURE (PACK OF 25)

- *50 pages, 8-1/2" x 11"*
- *Fabuwood's Customization Brochure*

Modifications

CUT ITEMS

	ITEM	DESCRIPTION
*	CUT WIDTH-BASE	reduce width of base cabinet to ------ "wide
*	CUT WIDTH-TALL	reduce width of tall cabinet to ------ "wide
*	CUT WIDTH-WALL	reduce width of wall cabinet to ------ "wide
	CUT-BASE	Reduce depth of base cabinet
	CUT-COLUMN	reduce depth of column to ------ "deep
	CUT-DBASE	Reduce depth of drawer base cabinet
*	CUT-PANEL	Cut down a panel to any size
	CUT-ROD	Reduce depth of rollout drawer
	CUT-SBASE	Reduce depth of sink base cabinet
	CUT-TALL	Reduce depth of tall cabinet
	CUT-WALL	Reduce depth of wall cabinet
	CUT-RETURN WIDTH	Reduce width of 3" reutrn
	CUT-BASE HEIGHT	Reduce height of base cabinet by removing top drawer
	CUT 2" FROM 96" MOLDING	Reduce length of molding to 94"

* *Not available for Illume Designer Collection. Email customquotes@fabuwood.com for custom quote.*

PIPE CHASE

ITEM	DESCRIPTION
CHASE-BASE	Make chase in base cabinet (must supply a drawing)
CHASE-CORNER	Make chase in corner cabinet ----x---- (WDC, WPC, ERB only)
CHASE-DBASE	Make chase in drawer cabinet (must supply drawing)
CHASE-TALL	Make chase in tall cabinet (must supply a drawing)
CHASE-WALL	Make chase in wall cabinet (must supply a drawing)

Must supply a drawing for all chase modifications.

Notice regarding Illume Customizations:
Any customizations for the Illume Frameless line are manufactured and assembled in our Newark Manufacturing facility and will not include the Threespine® Click Technology.

Modifications

CUSTOMIZATIONS

ITEM	DESCRIPTION
HAMPER	Install door mounted pull out wood hamper in cabinet
INCREASE-BASE	Increase depth on base cabinet.
INCREASE-TALL	Increase depth on tall cabinet.
INCREASE-WALL	Increase depth on wall cabinet.
INSTALL-ACCES	Install any accessory in a cabinet (accessories not included)
PUSH TO OPEN DOORS	Install BLUM Tip-On Latch for push-to-open door(s)
PUSH TO OPEN DRAWERS	Install BLUM Tip-On Slides for push-to-open drawer(s)
REMOVE DRAWER	Remove cabinet drawer to create sink base
FINISHED END-BASE	Apply laminate skin to side of base cabinet
FINISHED END-WALL	Apply laminate skin to side of wall cabinet
FINISHED END-TALL	Apply laminate skin to side of tall cabinet
EBAND-MATCH BOX	Apply matching color edge-band to cabinet carcass
EBAND-MATCH SHELF	Apply matching color edge-band to adjustable shelves
CREATE-BMC	Create Base Microwave Cabinet
CREATE-BOC	Create Base Oven Cabinet
MATCH-INTERIOR	Finish interior of cabinet to match exterior
BOXCAP	Add BOXCAP to lower MERIVOBOX drawer
EXTENDED DOOR	Extend doors to overhang 1-1/2" or 3/4" below cabinet box
CONNECT DOORS	Connect doors of tall cabinet with dowels to create one larger door
EDGE BAND	Apply edge band on selected side of panel
INCREASE-PANEL	Increase depth of DWR in 1/4" increments.
TK DRAWER	Create toe kick drawer on base cabinet

NOTE: Increased depth of Rollout drawers are by custom request only and are not included in INCREASE-BASE, INCREASE-TALL, and INCREASE-WALL modifications. Email customquotes@fabuwood.com for custom quote.

Notice regarding Illume Customizations:
Any customizations for the Illume Frameless line are manufactured and assembled in our Newark Manufacturing facility and will not include the Threespine® Click Technology.

Loose Parts

LOOSE PARTS

ITEM	DESCRIPTION
EDGE-BAND	Additional Edge Banding (price per linear foot)
EDGE-BAND LINEN-CARCASS	Illume Interior Linen Edgeband (price per linear foot)
ITKL-4	Illume Toe Kick Leg (Pack of 4 Legs and 4 Clips)
PROTECTIVE FILM ERASER	Eraser to remove Illume protective film
BP-ILLUME	BUMPER PADS FOR ILLUME DOORS
BP-ILLUME WDC	BUMPER PADS FOR ILLUME DIAGONAL DOORS
BLUM-ILLUME RES CLIP 10PK	PACK OF 10 BLUM ILLUME ANGLE RESTRICTION CLIP

- *Protective Film Eraser removes adhesive residue on cabinet finish*
- *Bumper Pads*
  - Clear Polyurethane with Peel-Off Application
  - Sound, Vibration, and Shock Dampening
  BP-ILLUME: *Compatible with Illume Standard Doors*
  BP-ILLUME WDC: *Compatible with WDC, DSB, DSF Diagonal Doors*
- *Illume Angle Restrictor Clip:*
  - BLUM Angle Restriction Clip for Illume CLIP-ON BLUMOTION Hinges.
  - Reduces swing from 110-deg to 86-deg
  - One clip required per every two hinges. For a 30"high door, use 1 clip. For 36" to 42" high Door, use 2 clips.

PROTECTIVE FILM ERASER

BP-ILLUME

BP-ILLUME WDC

BLUM-ILLUME RES CLIP

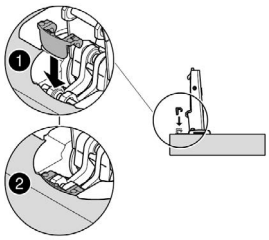

12”- 24” High Wall Cabinets

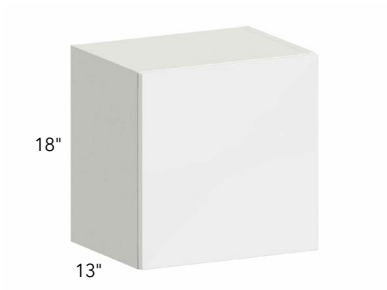

SINGLE DOOR

ITEM
W1218
W1518
W1818
W2118

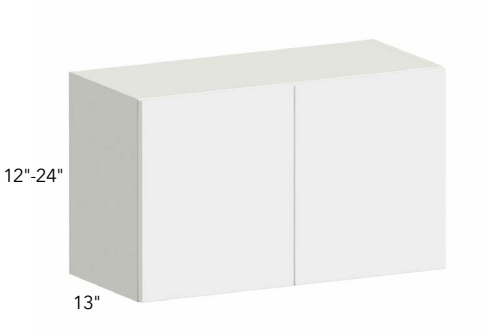

DOUBLE DOOR

	ITEM
	W2412
	W3012
	W3312
	W3612
	W3015
	W3315
	W3615
	W2718
	W3018
	W3318
	W3618
	W2421
	W3021
	W3321
	W3621
*	W3024
*	W3324
*	W3624

* *Includes one adjustable shelf*

12″- 24″ High & 24″ Deep Wall Cabinets

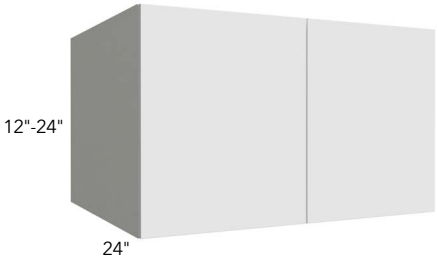

24" DEEP

	ITEM
	W301224
	W331224
	W361224
	W301824
	W331824
	W361824
	W302124
	W332124
	W362124
*	W242424
*	W302424
*	W332424
*	W362424

* *Includes one adjustable shelf*

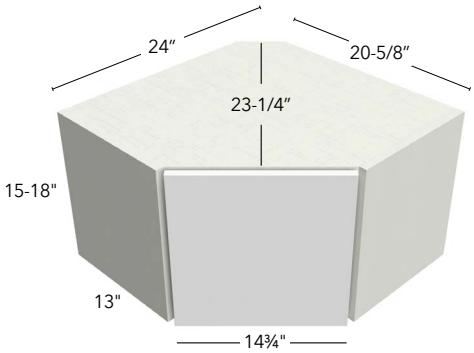

DIAGONAL CORNER

ITEM
WDC2415
WDC2418

- *9mm thick door bumper*

Note: Need to indicate R or L at time of order

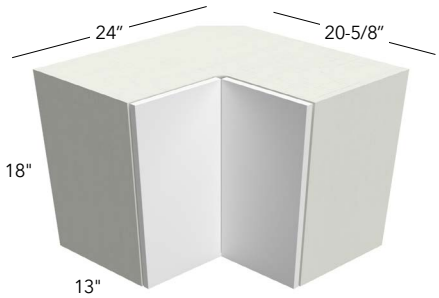

PIE CUT CORNER

ITEM	R	T
WPC2418	620	560

- *Soft close hinge not available*

Note: Need to indicate R or L at time of order

30" High Wall Cabinets

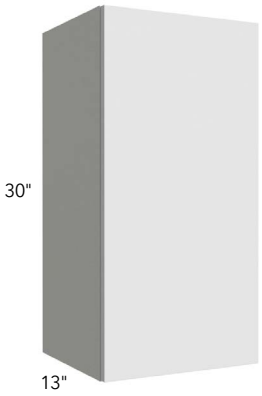

SINGLE DOOR

ITEM
W0930
W1230
W1530
W1830
W2130
W2430SD

- *Includes two adjustable shelves*

Note: Need to indicate R or L at time of order

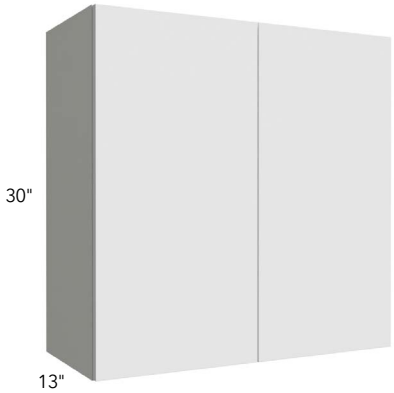

DOUBLE DOOR

ITEM
W2430
W2730
W3030
W3330
W3630

- *Includes two adjustable shelves*

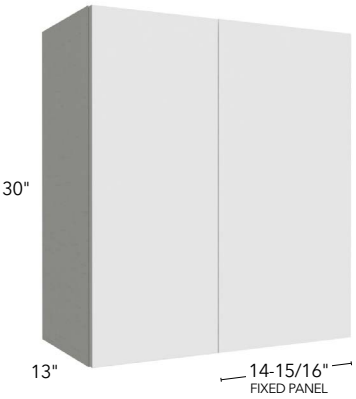

BLIND RIGHT SHOWN

SINGLE DOOR BLIND

ITEM
WBC2730
WBC3030
WBC3630

- *Must use filler on adjacent side (not supplied)*
- *Dimensions are rounded off to nearest 1/16"*
- *Includes two adjustable shelves*

Note: Need to indicate Blind Left or Blind Right at time of order

	Act.	Door	Open (door side)
WBC2730	27"	11-7/8"	11-1/4"
WBC3030	30"	14-7/8"	14-1/4"
WBC3630	36"	20-7/8"	20-3/16"

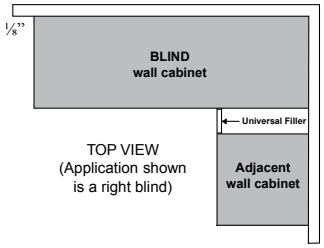

TOP VIEW
(Application shown
is a right blind)

30" High Wall Cabinets

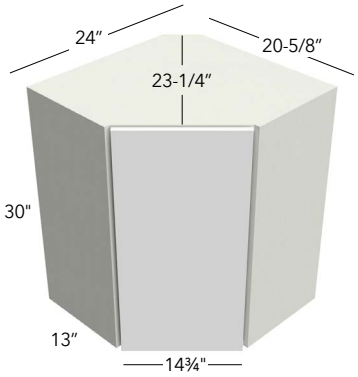

DIAGONAL CORNER

ITEM
WDC2430

- *9mm thick door bumper*
- *Includes two adjustable shelves*

Note: Need to indicate R or L at time of order

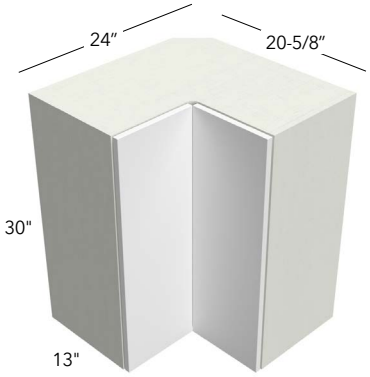

PIE CUT CORNER

ITEM
WPC2430

- *Soft close hinge not available*
- *Includes two adjustable shelves*

Note: Need to indicate R or L at time of order

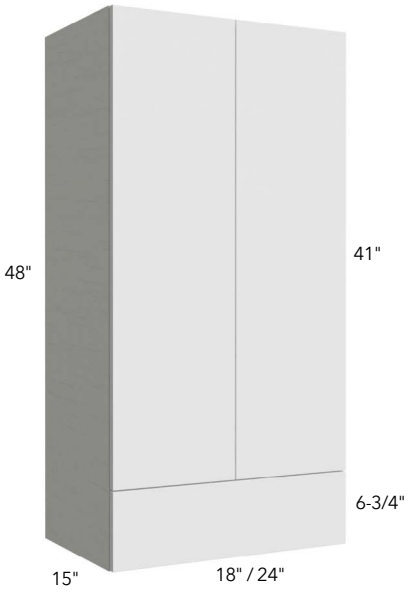

WALL WITH DRAWER

	ITEM
*	WD1848
	WD2448

* *Has one door. Need to indicate R or L at time of order*

- *Includes two adjustable shelves*

36" High Wall Cabinets

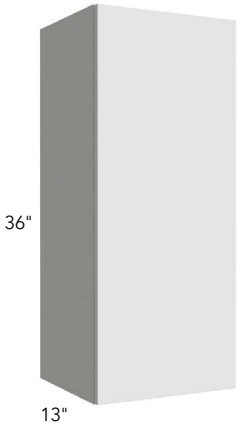

SINGLE DOOR

ITEM
W0936
W1236
W1536
W1836
W2136
W2436SD

- *Includes two adjustable shelves*

Note: Need to indicate R or L at time of order

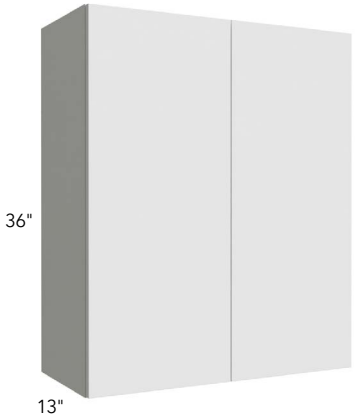

DOUBLE DOOR

ITEM
W2436
W2736
W3036
W3336
W3636

- *Includes two adjustable shelves*

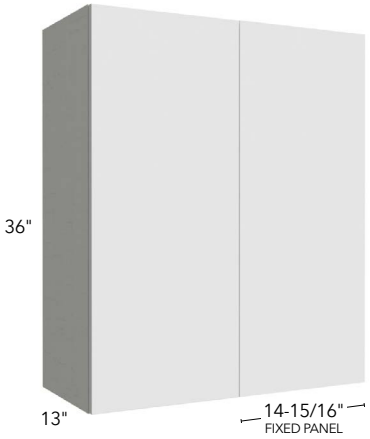

BLIND RIGHT SHOWN

SINGLE DOOR BLIND

ITEM
WBC2736
WBC3036
WBC3636

- *Must use filler on adjacent side (not supplied)*
- *Dimensions are rounded off to nearest 1/16"*
- *Includes two adjustable shelves*

Note: Need to indicate Blind Left or Blind Right at time of order

	Act.	Door	Open (door side)
WBC2736	27"	11-7/8"	11-1/4"
WBC3036	30"	14-7/8"	14-1/4"
WBC3636	36"	20-7/8"	20-3/16"

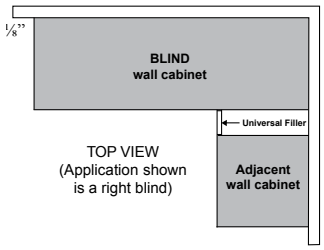

TOP VIEW
(Application shown
is a right blind)

36" High Wall Cabinets

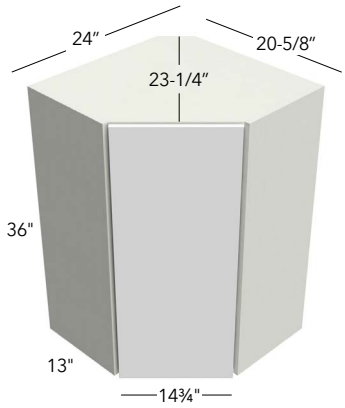

DIAGONAL CORNER

ITEM
WDC2436

- *9mm thick door bumper*
- *Includes two adjustable shelves*

Note: Need to indicate R or L at time of order

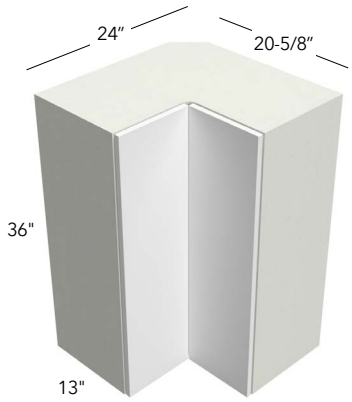

PIE CUT CORNER

ITEM
WPC2436

- *Soft close hinge not available*
- *Includes two adjustable shelves*

Note: Need to indicate R or L at time of order

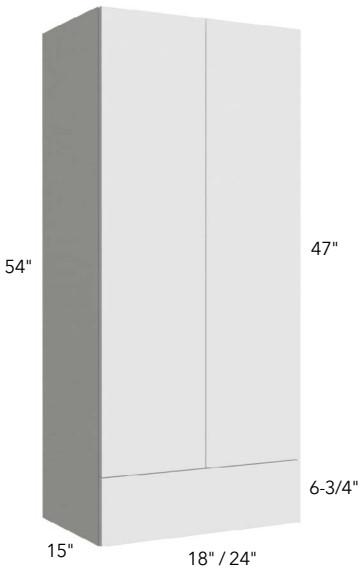

WALL WITH DRAWER

	ITEM
*	WD1854
	WD2454

* *Has one door. Need to indicate R or L at time of order*

- *Includes two adjustable shelves*

39" High Wall Cabinets

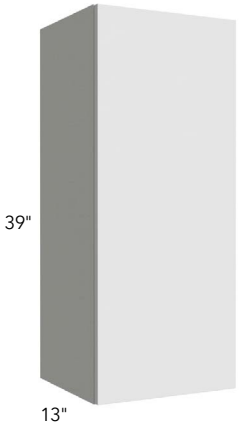

SINGLE DOOR

ITEM
W0939
W1239
W1539
W1839
W2139
W2439SD

- *Includes two adjustable shelves*

Note: Need to indicate R or L at time of order

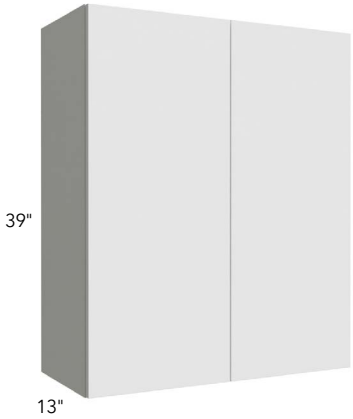

DOUBLE DOOR

ITEM
W2439
W2739
W3039
W3339
W3639

- *Includes two adjustable shelves*

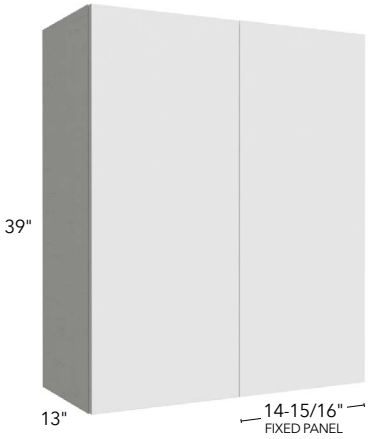

BLIND RIGHT SHOWN

SINGLE DOOR BLIND

ITEM
WBC2739
WBC3039
WBC3639

- *Must use filler on adjacent side (not supplied)*
- *Dimensions are rounded off to nearest 1/16"*
- *Includes two adjustable shelves*

Note: Need to indicate Blind Left or Blind Right at time of order

	Act.	Door	Open (door side)
WBC2739	27"	11-7/8"	11-1/4"
WBC3039	30"	14-7/8"	14-1/4"
WBC3639	36"	20-7/8"	20-3/16"

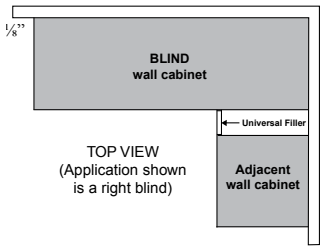

TOP VIEW
(Application shown
is a right blind)

39" High Wall Cabinets

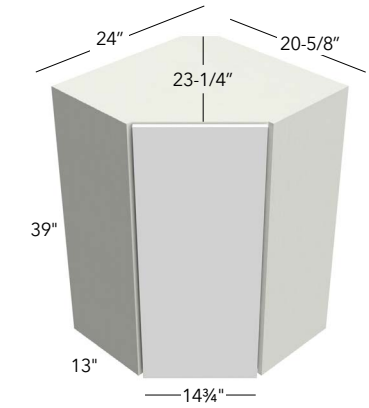

DIAGONAL CORNER

ITEM
WDC2439

- *9mm thick door bumper*
- *Includes two adjustable shelves*

Note: Need to indicate R or L at time of order

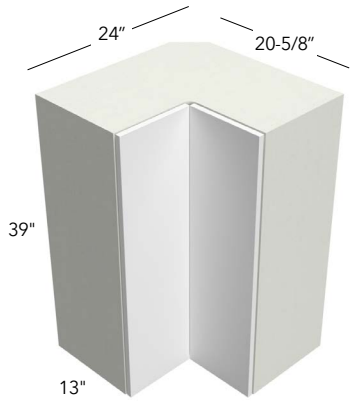

PIE CUT CORNER

ITEM
WPC2439

- *Soft close hinge not available*
- *Includes two adjustable shelves*

Note: Need to indicate R or L at time of order

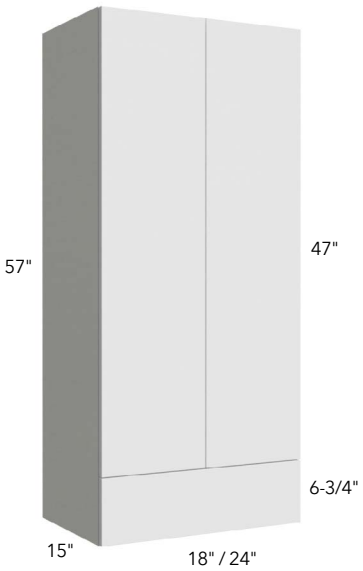

WALL WITH DRAWER

	ITEM
*	WD1857
	WD2457

* *Has one door. Need to indicate R or L at time of order*

- *Includes two adjustable shelves*

42" High Wall Cabinets

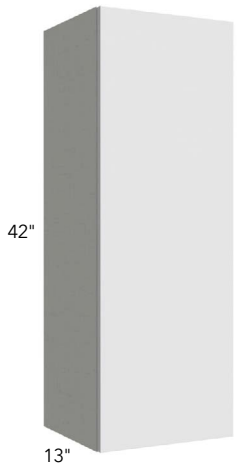

SINGLE DOOR

ITEM
W0942
W1242
W1542
W1842
W2142
W2442SD

- *Includes three adjustable shelves*

Note: Need to indicate R or L at time of order

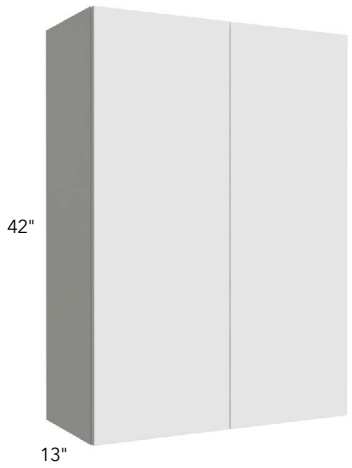

DOUBLE DOOR

ITEM
W2442
W2742
W3042
W3342
W3642

- *Includes three adjustable shelves*

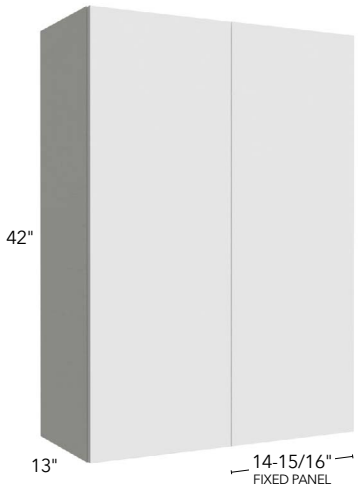

BLIND RIGHT SHOWN

SINGLE DOOR BLIND

ITEM
WBC2742
WBC3042
WBC3642

- *Must use filler on adjacent side (not supplied)*
- *Dimensions are rounded off to nearest 1/16"*
- *Includes three adjustable shelves*

Note: Need to indicate Blind Left or Blind Right at time of order

	Act.	Door	Open (door side)
WBC2742	27"	11-7/8"	11-1/4"
WBC3042	30"	14-7/8"	14-1/4"
WBC3642	36"	20-7/8"	20-3/16"

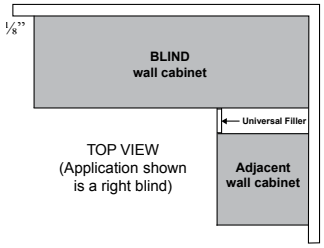

TOP VIEW
(Application shown
is a right blind)

42" High Wall Cabinets

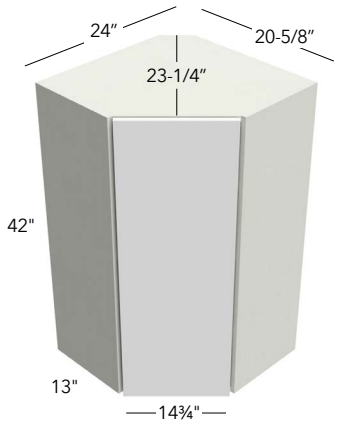

DIAGONAL CORNER

ITEM
WDC2442

- *9mm thick door bumper*
- *Includes three adjustable shelves*

Note: Need to indicate R or L at time of order

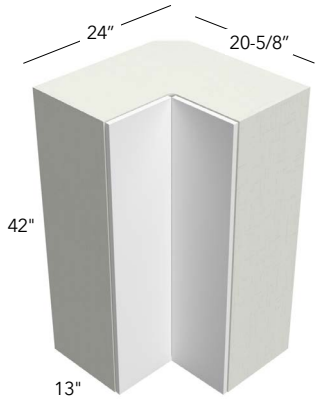

PIE CUT CORNER

ITEM
WPC2442

- *Soft close hinge not available*
- *Includes three adjustable shelves*

Note: Need to indicate R or L at time of order

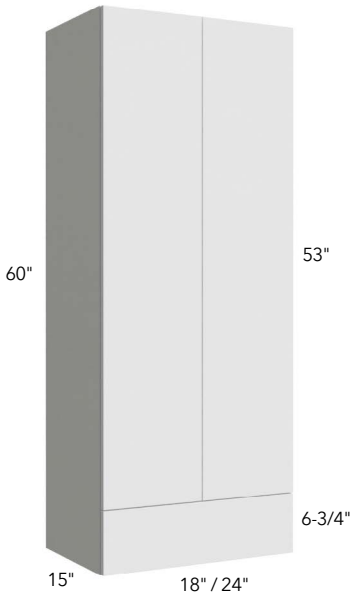

WALL WITH DRAWER

	ITEM
*	WD1860
	WD2460

* *Has one door. Need to indicate R or L at time of order*
- *Includes three adjustable shelves*

Specialty Wall Cabinets

WALL APPLIANCE

ITEM
WAC2418
WAC3018
WAC3318
WAC3618

- *Shipped with a support bracket to be removed before cabinet installation*

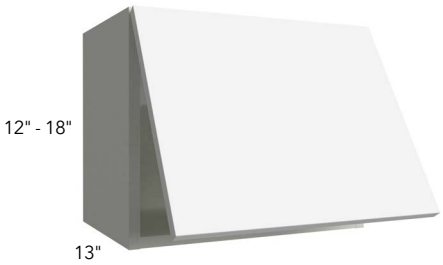

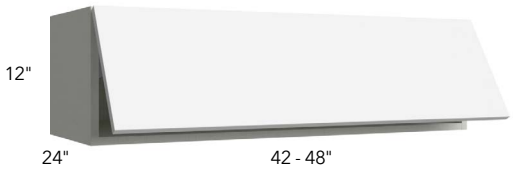

LIFT-UP

	ITEM
*	W2412LU
	W1815LU
	W2115LU
	W2415LU
	W2715LU
	W3015LU
	W3315LU
	W3615LU
	W1818LU
	W2118LU
	W2418LU
	W2718LU
	W3018LU
	W3318LU
	W3618LU
*	W421224LU
*	W481224LU

* *24" depth*

Microwave Wall Cabinets

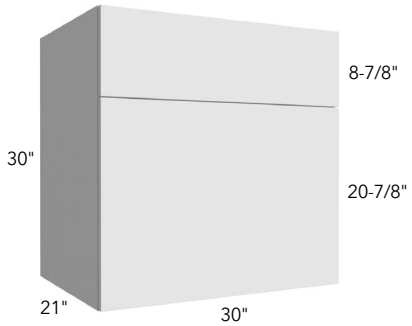

30" MICROWAVE

ITEM
MC303021

- *Full closed front:*
  Max opening 28-1/2"W x 19-3/4"H
- *Lift-up door with standard clip-on hinges*
- *Front panel attaches with clips for easy removal and install*
- *Additional Edge-Band available for purchase*

Note: To avoid damage please apply extra care when cutting the front panel.

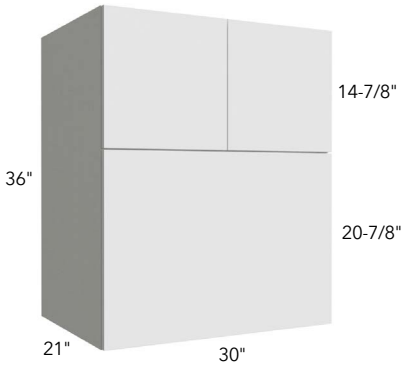

36" MICROWAVE

ITEM
MC303621

- *Full closed front:*
  Max opening 28-1/2"W x 19-3/4"H
- *Front panel attaches with clips for easy removal and install*
- *Additional Edge-Band available for purchase*

Note: To avoid damage please apply extra care when cutting the front panel.

Microwave Wall Cabinets

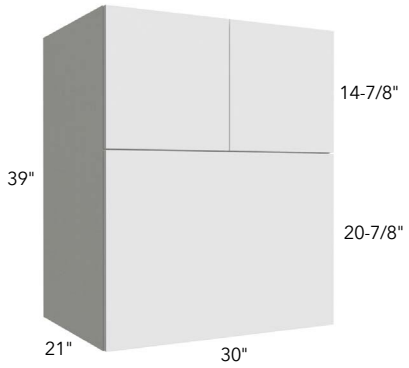

39" MICROWAVE

ITEM
MC303921

- *Full closed front:*
  Max opening 28-1/2"W x 19-3/4"H
- *Front panel attaches with clips for easy removal and install*
- *Additional Edge-Band available for purchase*

Note: To avoid damage please apply extra care when cutting the front panel.

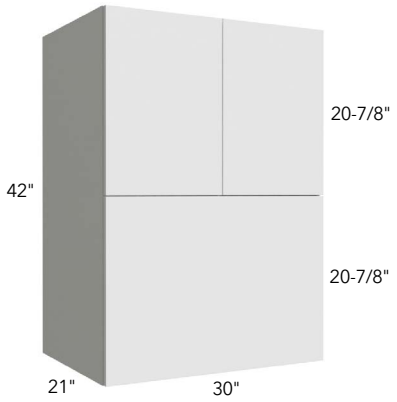

42" MICROWAVE

ITEM
MC304221

- *Comes with 1 shelf*
- *Full closed front:*
  Max opening 28-1/2"W x 19-3/4"H
- *Front panel attaches with clips for easy removal and install*
- *Additional Edge-Band available for purchase*

Note: To avoid damage please apply extra care when cutting the front panel.

Wine Cabinets

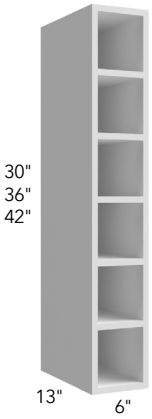

WINE CUBE

ITEM
WC0630
WC0636
WC0642

- *Matching finished interior*
- *Gloss finishes are featured on top of shelves and all interior faces of the cabinet box*
- *30" Fits 5 bottles*
- *36" Fits 6 bottles*
- *42" Fits 7 bottles*

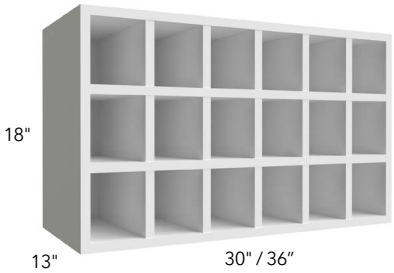

WINE RACK

ITEM
WR3018
WR3618

- *Matching finished interior*
- *Gloss finishes are featured on top of shelves and all interior faces of the cabinet box*
- *30" Fits 18 bottles*
- *36" Fits 21 bottles*

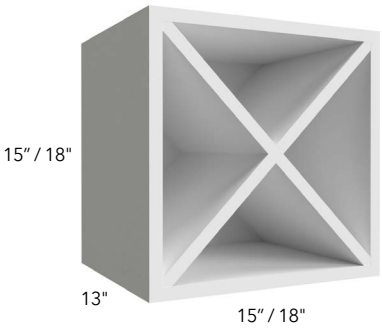

WINE RACK

ITEM
WR15X15
WR18X18

- *Matching finished interior*
- *Gloss finishes are featured on top of shelves and all interior faces of the cabinet box*
- *Storage Capacity*
  - » *WR15X15: 8-12 bottles*
  - » *WR18X18: 12-16 bottles*

Base Cabinets

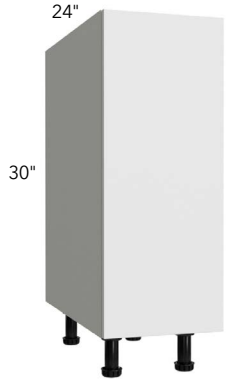

FULL HEIGHT SINGLE DOOR

ITEM
B09FD
B12FD
B15FD
B18FD
B21FD
B24SFD

- *Includes two 18" deep adjustable shelves*
- *Trash Can available on pg. 41*
- *Roll Out available on pg. 33*

Note: Need to indicate R or L at time of order

FULL HEIGHT DOUBLE DOOR

ITEM
B24FD
B27FD
B30FD
B33FD
B36FD

- *Includes two 18" deep adjustable shelves*
- *Roll Out available on pg. 33*

Base Cabinets

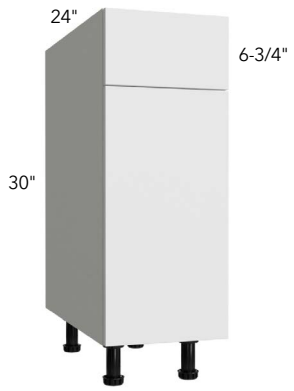

SINGLE DOOR

ITEM
B12
B15
B18
B21
B24SD

- *Includes one 18" deep adjustable shelf*
- *Trash Can available on pg. 41*
- *Roll Out available on pg. 33*

Note: Need to indicate R or L at time of order

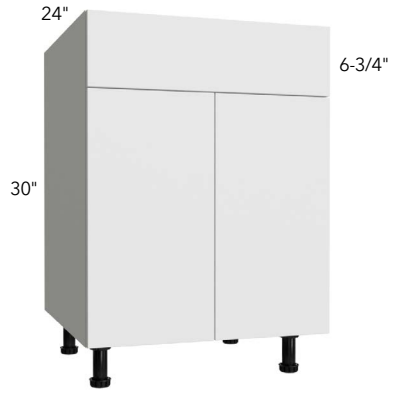

DOUBLE DOOR

ITEM
B24
B27
B30
B33
B36

- *Includes one 18" deep adjustable shelf*
- *Roll Out available on pg. 33*

Drawer Base Cabinets

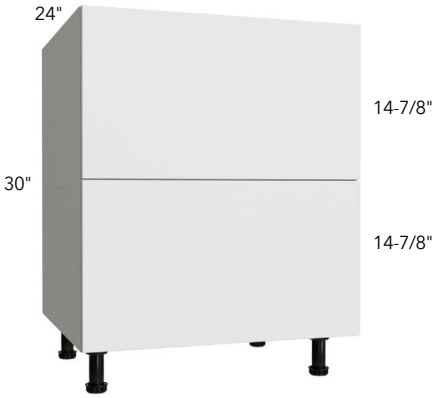

2 DRAWER

ITEM
DB24-2
DB27-2
DB30-2
DB33-2
DB36-2

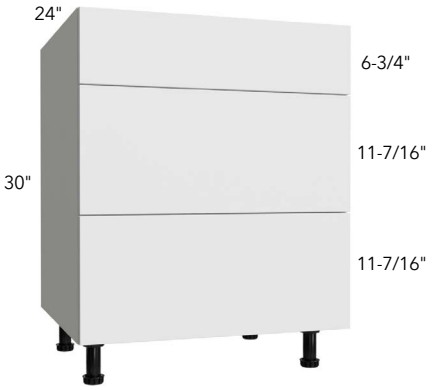

3 DRAWER

ITEM
DB12-3
DB15-3
DB18-3
DB21-3
DB24-3
DB27-3
DB30-3
DB33-3
DB36-3

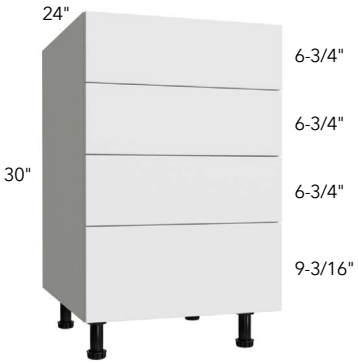

4 DRAWER

ITEM
DB12-4
DB15-4
DB18-4
DB21-4

Blind Base Cabinets

DRAWER BENCH SEAT

ITEM
DBS24
DBS30
DBS36

- *Bench Seat follows standard base construction with open top*

Blind Base Cabinets

BLIND FULL HEIGHT DOOR

ITEM
BLB36/39FD
BLB39/42FD
BLB42/45FD
BLB48/51FD

- *Must use filler on adjacent wall (not supplied)*
- *Measurements are rounded off to closest 1/32"*
- *Includes two 18" deep adjustable shelves*

Note: Need to indicate Blind Left or Blind Right at time of order

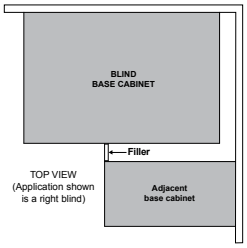

	Act.	Min.	Door	Closed Blind	Open (Door)
BLB36/39FD	30"	36"	8-7/8"	21"	8-11/32"
BLB39/42FD	33"	39"	11-7/8"	21"	11-11/32"
BLB42/45FD	36"	42"	14-7/8"	21"	14-11/32"
BLB48/51FD	42"	48"	20-7/8"	21"	20-11/32"

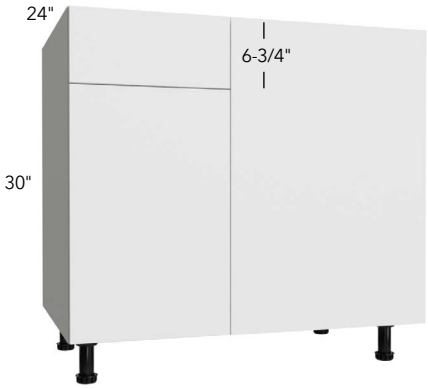

BLIND

ITEM
BLB36/39
BLB39/42
BLB42/45
BLB48/51

- *Includes one 18" deep adjustable shelf*
- *Must use filler on adjacent wall (not supplied)*
- *Measurements are rounded off to closest 1/32"*

Note: Need to indicate Blind Left or Blind Right at time of order

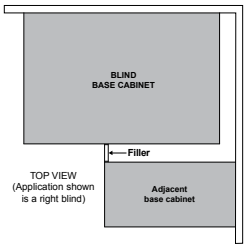

	Act.	Min.	Door	Closed Blind	Open (Door)	Open (Drawer)
BLB36/39	30"	36"	8-7/8"	21"	8-11/32"	7 5/8"
BLB39/42	33"	39"	11-7/8"	21"	11-11/32"	10 5/8"
BLB42/45	36"	42"	14-7/8"	21"	14-11/32"	13 5/8"
BLB48/51	42"	48"	20-7/8"	21"	20-11/32"	19 5/8"

Corner Base Cabinets

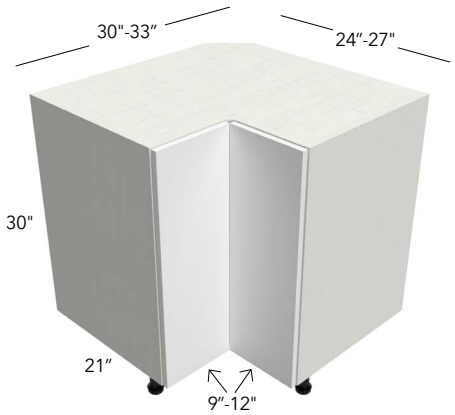

EASY REACH

ITEM
ERB33
ERB36

- *Must be installed 3" from both walls*
- *Center shelf is adjustable*
- *Soft close hinge not available*
- *Easy-Reach & Lazy Susan bases are designed with a smaller cabinet foot-print for ease of installation & lighter weight. For example, LSB33 is 30" x 30" x 21" deep, whereas LSB36 is 33" x 33" x 21" deep.*

Note: Need to indicate R or L at time of order

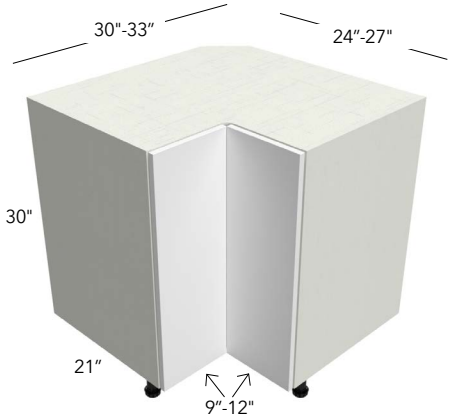

LAZY SUSAN

ITEM
LSB33
LSB36

- *Must be installed 3" from both walls*
- *LSB33: Includes two 26" Pie-Cut Lazy Susan Trays*
  LSB36: Includes two 28" Pie-Cut Lazy Susan Trays
- *Both Lazy Susan trays rotate independently*
- *Center tray is mounted on a 3/4" adjustable shelf*
- *Soft close hinge not available*
- *Easy-Reach & Lazy Susan bases are designed with a smaller cabinet foot-print for ease of installation & lighter weight. For example, LSB33 is 30" x 30" x 21" deep, whereas LSB36 is 33" x 33" x 21" deep.*

Note: Need to indicate R or L at time of order

Sink Base Cabinets

SINK BASE

	ITEM
*	SB21
*	SB24SD
	SB24
	SB27
	SB30
	SB33
	SB36

* *Single door cabinet. Need to indicate R or L at time of order*

- *Note: Sink Base cabinets come pre-drilled with shelf clip holes. Loose shelves available to purchase separately.*

FULL HEIGHT DOOR SINK BASE

	ITEM
*	SB21FD
*	SB24SFD
	SB24FD
	SB27FD
	SB30FD
	SB33FD
	SB36FD

* *Single door cabinet. Need to indicate R or L at time of order*

- *Note: Sink Base cabinets come pre-drilled with shelf clip holes. Loose shelves available to purchase separately.*

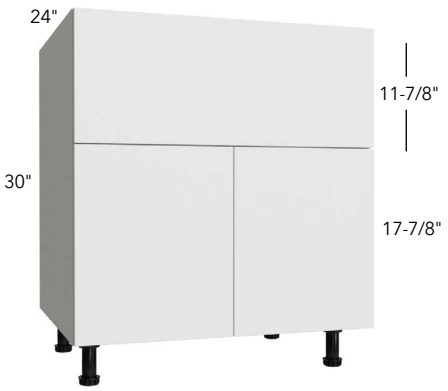

FARM SINK

ITEM
FS30
FS33
FS36

- *Cut opening on job site*
- *Farm Sink Base comes with Apron Panel front*
- *Max opening:*
  FS30: 28-1/2"W x 11-5/8"H
  FS33: 31-1/2" x 11-5/8"H
  FS36: 34-1/2"W x 11-5/8"H
- *Front panel attaches with clips for easy removal and install*
- *Additional Edge-Band available for purchase*

Note: To avoid damage please apply extra care when cutting the front panel.

DIAGONAL SINK FRONT

ITEM
DSF36**
DSF42*
DSF36FD**
DSF42FD*

* *Includes two doors*
** ***Note: Need to indicate R or L at time of order***

Specialty Base Cabinets

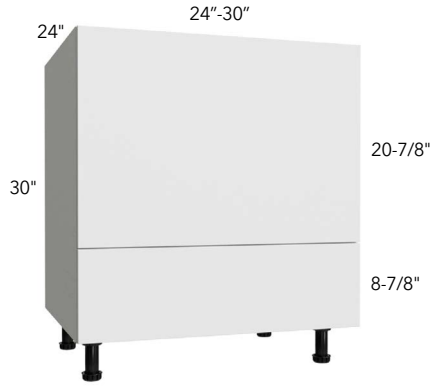

MICROWAVE

ITEM
BMC24
BMC30

- *Front panel attaches with clips for easy removal and install*
- *Max opening:*
  BMC24 = 22-1/2"W x 19-3/4"H
  BMC30 = 28-1/2"W x 19-3/4"H
- *Additional Edge-Band available for purchase*

Note: To avoid damage, please apply extra care when cutting the front panel.

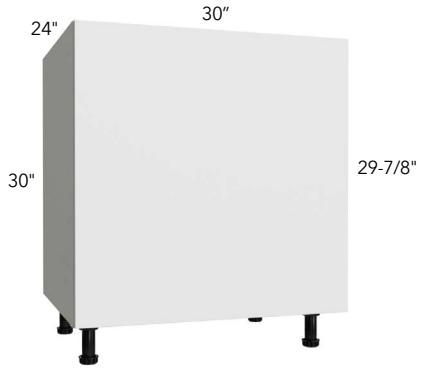

OVEN

ITEM
BOC30

- *Front panel attaches with clips for easy removal and install*
- *Max opening: 28-1/2"W x 28-1/2"H*
- *Additional Edge-Band available for purchase*

Note: To avoid damage, please apply extra care when cutting the front panel.

RANGE TOP BASE

ITEM
RTB30
RTB36
RTB48

- *Includes one adjustable shelf*
- *Range Top Bases come with full top panel*

RANGE TOP DRAWER BASE

ITEM
RTDB30-2
RTDB36-2
RTDB48-2

- *Range Top Bases come with full top panel*

13" Deep Tall Pantry Cabinets

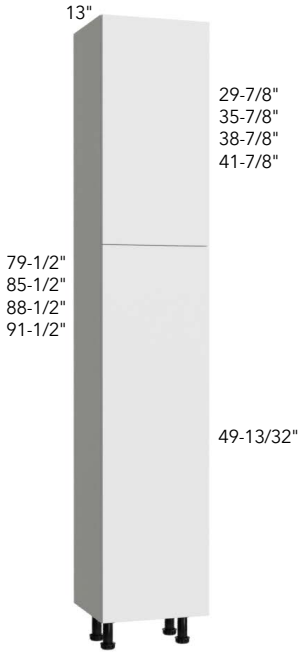

SINGLE DOOR 13" DEEP

ITEM
TP151384
TP181384
TP241384SD
TP151390
TP181390
TP241390SD
TP151393
TP181393
TP241393SD
TP151396
TP181396
TP241396SD

- *Includes 12" deep shelves*
- *84" & 90" high - 5 shelves*
- *96" high - 6 shelves*
- *Roll Out Drawer available on pg. 33*

Note: Need to indicate R or L at time of order

Shipping Note: Pantry shelves ship loose and will appear as individual line items on order packing list. Additional charges or pallet requirements may result depending on shipping method.

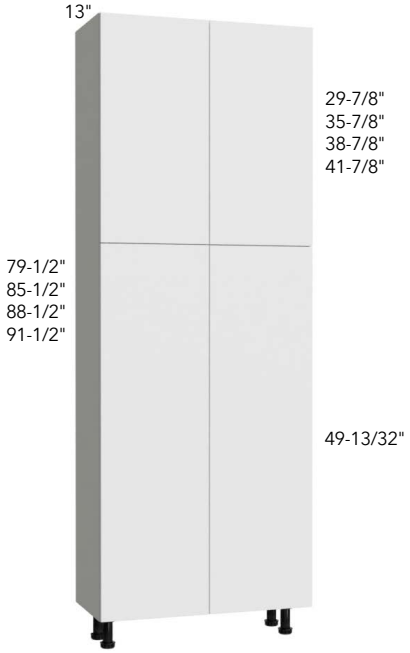

DOUBLE DOOR 13" DEEP

ITEM
TP241384
TP241390
TP241393
TP241396
TP301384
TP301390
TP301393
TP301396

- *Includes 12" deep shelves*
- *84" & 90" high - 5 shelves*
- *96" high - 6 shelves*
- *Roll Out Drawer available on pg. 33*

Shipping Note: Pantry shelves ship loose and will appear as individual line items on order packing list. Additional charges or pallet requirements may result depending on shipping method.

24" Deep Tall Pantry Cabinets

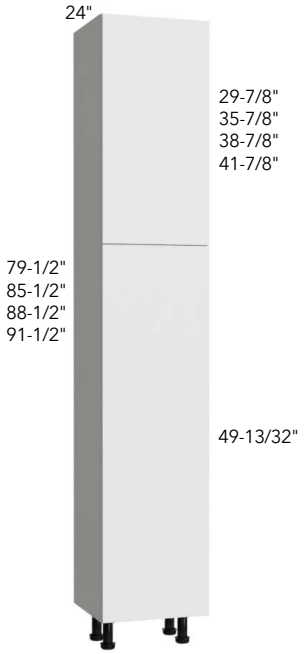

SINGLE DOOR

ITEM
TP152484
TP182484
TP242484SD
TP152490
TP182490
TP242490SD
TP152493
TP182493
TP242493SD
TP152496
TP182496
TP242496SD

- *Includes 21" deep adjustable shelves*
- *84" & 90" high - 5 shelves*
- *96" high - 6 shelves*
- *Roll Out Drawer available on pg. 33*

Note: Need to indicate R or L at time of order

Shipping Note: Pantry shelves ship loose and will appear as individual line items on order packing list. Additional charges or pallet requirements may result depending on shipping method.

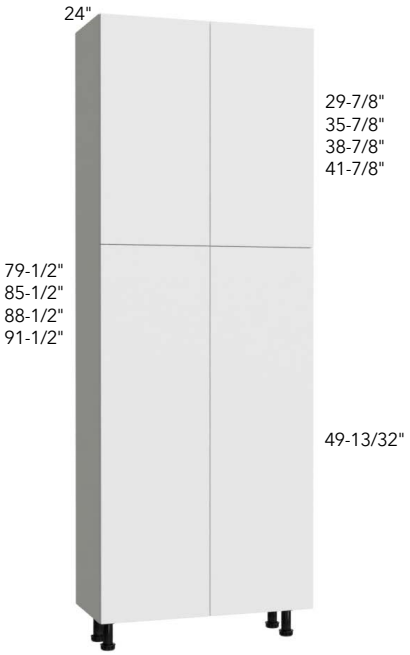

DOUBLE DOOR

ITEM
TP242484
TP242490
TP242493
TP242496
TP302484
TP302490
TP302493
TP302496

- *Include 21" deep adjustable shelves*
- *84" & 90" high - 5 shelves*
- *96" high - 6 shelves*
- *Roll Out Drawer available on pg. 33*

Shipping Note: Pantry shelves ship loose and will appear as individual line items on order packing list. Additional charges or pallet requirements may result depending on shipping method.

Oven Cabinets

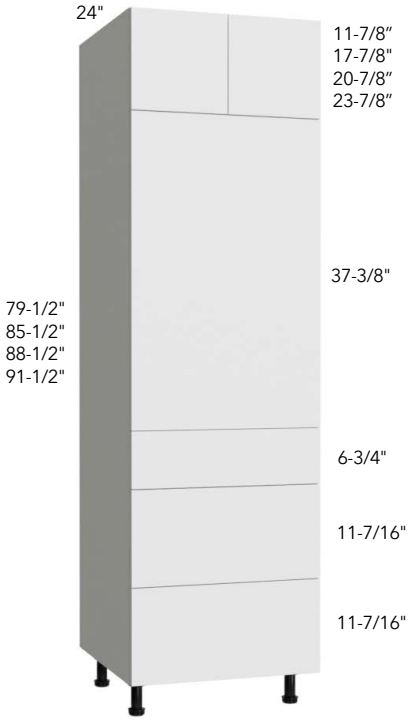

SINGLE OVEN CABINET W/ 3 DRAWERS ON THE BOTTOM

	ITEM
	OC2484S-3
	OC3084S-3
	OC2490S-3
	OC3090S-3
	OC2493S-3
	OC3093S-3
*	OC2496S-3
*	OC3096S-3

* *Includes one shelf in upper wall section.*

When using two appliances:
It is recommended to provide support for top appliance; PLY-3/4 available to be purchased separately.
Fixed shelf to be installed on the jobsite by a qualified installer.

Full panel face frame to be trimmed on site (not by Fabuwood).
Additional Edge-Band available for purchase.

Note: To avoid damage to the frame & side panels, please apply extra care when cutting the front panel.

Oven Cabinets

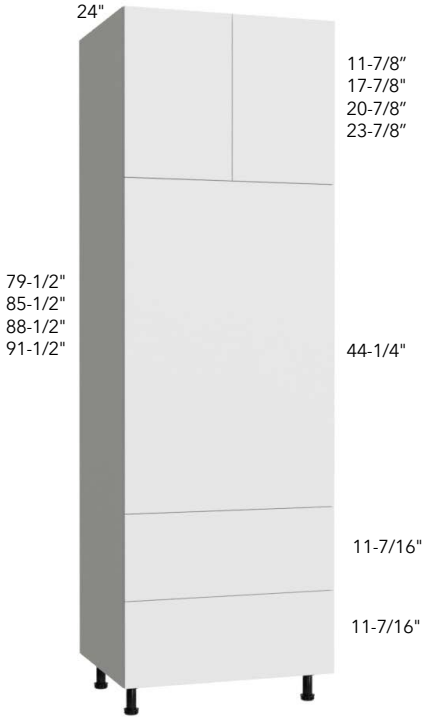

COMBO OVEN CABINET W/ 2 DRAWERS ON BOTTOM

	ITEM
	OC2484C
	OC3084C
	OC2490C
	OC3090C
	OC2493C
	OC3093C
*	OC2496C
*	OC3096C

* *Includes one shelf in upper wall section.*

When using two appliances:
It is recommended to provide support for top appliance; PLY-3/4 available to be purchased separately.
Fixed shelf to be installed on the jobsite by a qualified installer.

Full panel face frame to be trimmed on site (not by Fabuwood).
Additional Edge-Band available for purchase.

Note: To avoid damage to the frame & side panels, please apply extra care when cutting the front panel.

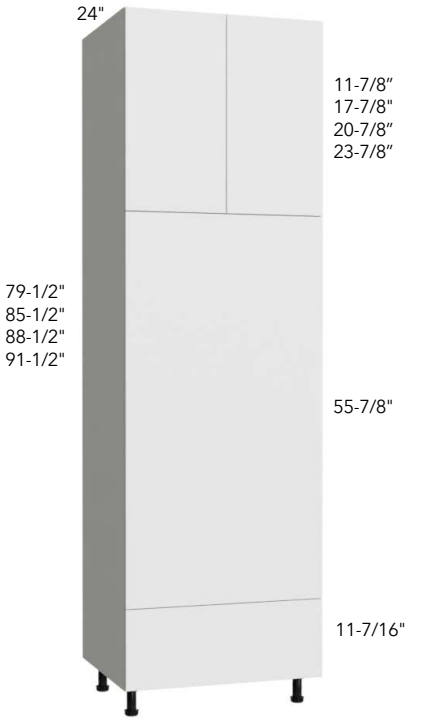

DOUBLE OVEN CABINET W/ 1 DRAWER ON BOTTOM

	ITEM
	OC2484D
	OC3084D
	OC2490D
	OC3090D
	OC2493D
	OC3093D
*	OC2496D
*	OC3096D

* *Includes one shelf in upper wall section.*

When using two appliances:
It is recommended to provide support for top appliance; PLY-3/4 available to be purchased separately.
Fixed shelf to be installed on the jobsite by a qualified installer.

Full panel face frame to be trimmed on site (not by Fabuwood).
Additional Edge-Band available for purchase.

Note: To avoid damage to the frame & side panels, please apply extra care when cutting the front panel.

Vanities

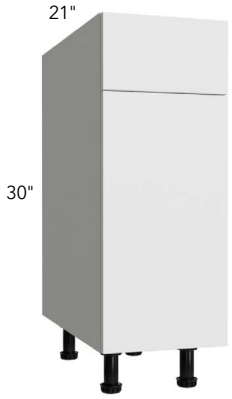

SINGLE DOOR VANITY BASE

ITEM
VB12
VB15
VB18
VB21

- *Includes one 18" deep adjustable shelf*

Note: Need to indicate R or L at time of order

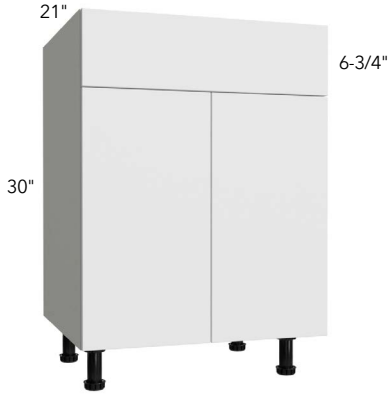

VANITY BASE

ITEM
VB24
VB27
VB30
VB33
VB36

- *Includes one 18" deep adjustable shelf*

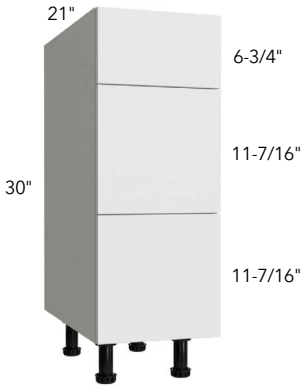

VANITY DRAWER BASE (3 DRAWERS)

ITEM
VDB12
VDB15
VDB18

Vanities

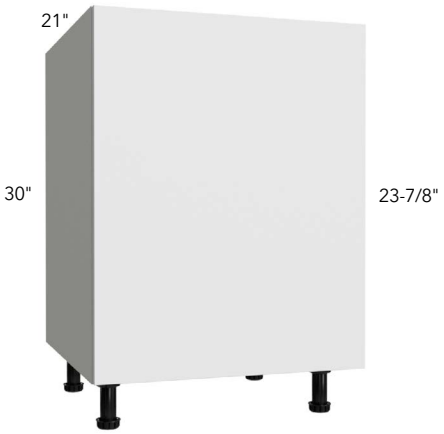

VANITY SINK BASE (FULL HEIGHT SINGLE DOOR)

ITEM
VSB24SFD

Note: Sink Base cabinets come pre-drilled with shelf clip holes. Loose shelves available to purchase separately.

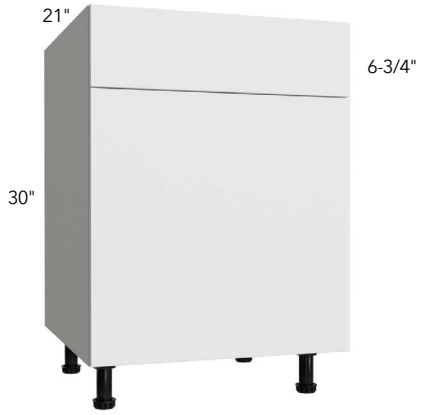

VANITY SINK BASE (SINGLE DOOR WITH DRAWER)

ITEM
VSB24SD

Note: Sink Base cabinets come pre-drilled with shelf clip holes. Loose shelves available to purchase separately.

Vanities

VANITY SINK BASE (SAME LOOK AS 2 DOOR/DRAWER BASE)

ITEM
VSB24
VSB27
VSB30
VSB33
VSB36

Note: Sink Base cabinets come pre-drilled with shelf clip holes. Loose shelves available to purchase separately.

VANITY SINK BASE (FULL HEIGHT 2 DOORS)

ITEM
VSB24FD
VSB27FD
VSB30FD
VSB33FD
VSB36FD

Note: Sink Base cabinets come pre-drilled with shelf clip holes. Loose shelves available to purchase separately.

Vanity Tops

CLOUD

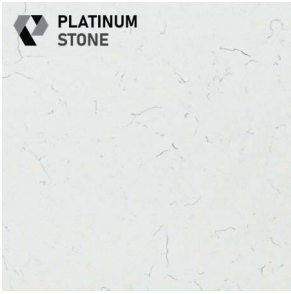

MOONSTONE

DESERT SILVER

MIAMI VENA

SINGLE SINK (MIAMI VENA)

VT60 (MIAMI VENA)

VANITY TOPS

ITEM
VT24 CLOUD
VT24 MOONSTONE
VT24 DESERT SILVER
VT24 MIAMI VENA
VT30 CLOUD
VT30 MOONSTONE
VT30 DESERT SILVER
VT30 MIAMI VENA
VT36 CLOUD
VT36 MOONSTONE
VT36 DESERT SILVER
VT36 MIAMI VENA
VT42 CLOUD
VT42 MOONSTONE
VT42 DESERT SILVER
VT42 MIAMI VENA
VT48 CLOUD
VT48 MOONSTONE
VT48 DESERT SILVER
VT48 MIAMI VENA
VT60 DOUBLE CLOUD
VT60 DOUBLE MOONSTONE
VT60 SINGLE DESERT SILVER
VT60 SINGLE MIAMI VENA
VT60 SINGLE CLOUD
VT60 SINGLE MOONSTONE
VT60 DOUBLE DESERT SILVER
VT60 DOUBLE MIAMI VENA

- *Includes vanity counter top, 4" backsplash, integrated rectangular sink*
- *Predrilled with 1-3/8" faucet hole for easy installation*
- *Counter Top Dimensions*
  - *VT24: 25"W x 22"D*
  - *VT30: 31"W x 22"D*
  - *VT36: 37"W x 22"D*
  - *VT42: 43"W x 22"D*
  - *VT48: 49"W x 22"D*
  - *VT60: 61"W x 22"D*
- *Sink Bowl Dimensions:*
  - *Cloud & Moonstone: 16-1/8"W x 11"D (VT60 Double: 16-1/8"W x 11"D)*
  - *Desert Silver & Miami Vena: 17"W x 11-13/16"D (VT60 Double: 16"W x 11-1/2"D)*

Vanity Tops

CLOUD/MOONSTONE SINGLE SINK

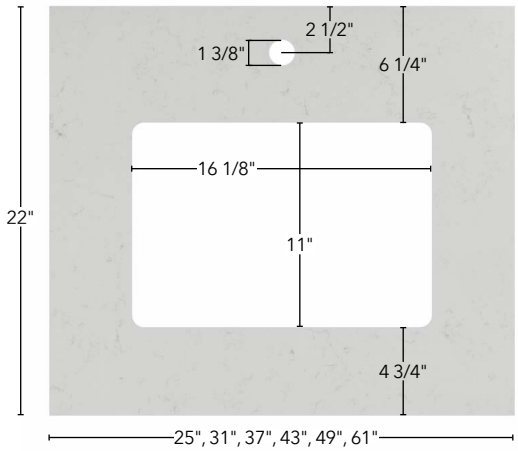

DESERT SILVER/MIAMI VENA SINGLE SINK

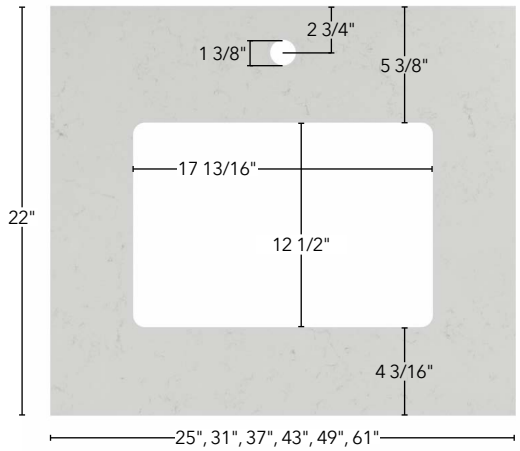

CLOUD/MOONSTONE DOUBLE SINK

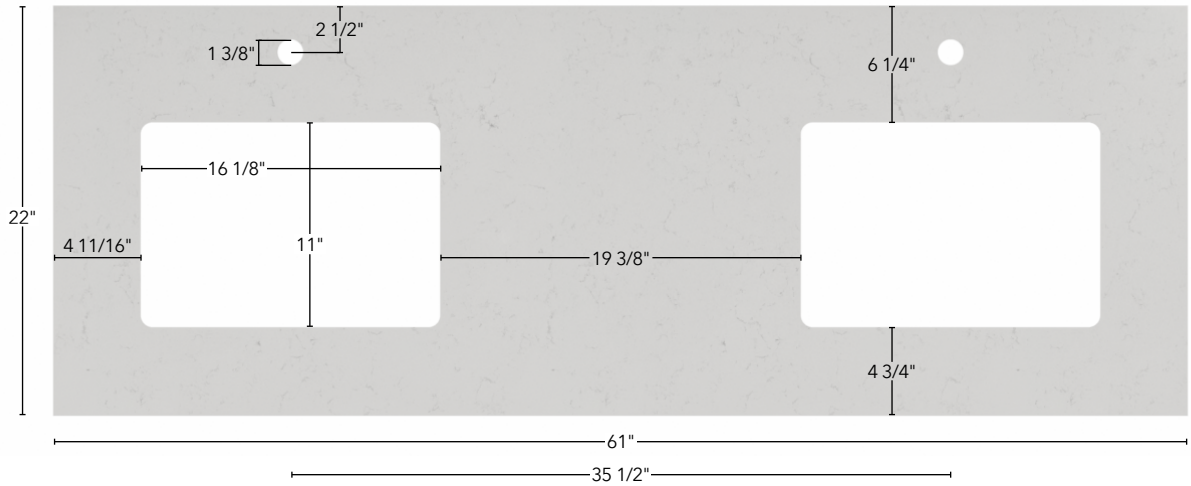

DESERT SILVER/MIAMI VENA DOUBLE SINK

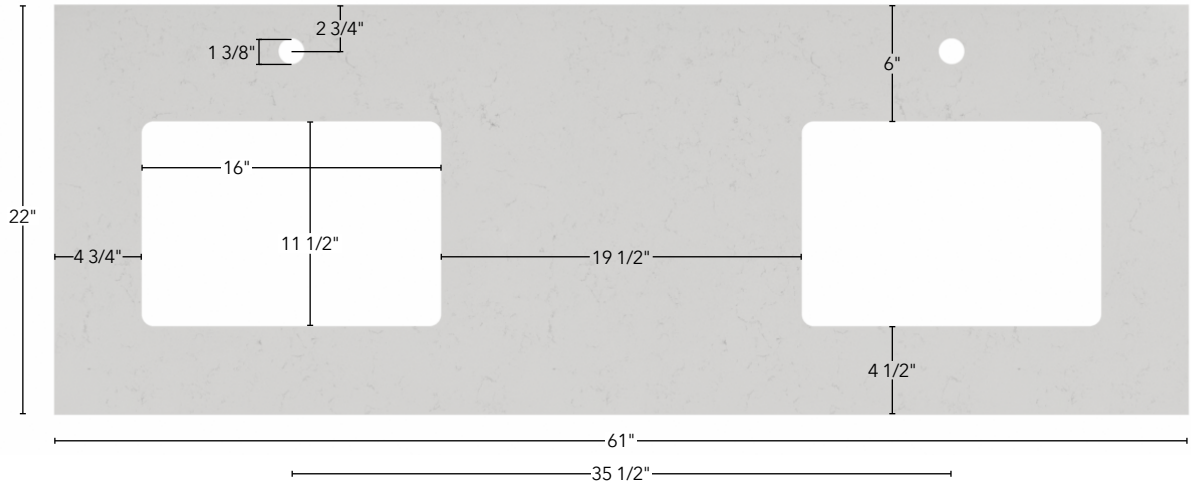

Base Accessories

ROLL OUT

ITEM
ROD-B15 ILLUME
ROD-B18 ILLUME
ROD-B21 ILLUME
ROD-B24 ILLUME
ROD-B27 ILLUME
ROD-B30 ILLUME
ROD-B33 ILLUME
ROD-B36 ILLUME

- *BLUM MERIVOBOX Roll-Outs feature Two-dimensional drawer front adjustment & a static load capacity of 75 lb.*
- *Illume Roll-Outs are Blum MERIVOBOX Metal Roll-Outs with Full-Extension Soft-Close Slides*
- *Pricing is per Roll-Out Drawer & includes installation when ordered as an accessory on a cabinet. Cabinet is not included.*
- *Can also be used with Pantries. EX: ROD-B24 ILLUME will work in a 24"W Pantry.*
- *Roll-Out Drawers are also available for 13"D Tall Pantries, 15"D Wall Drawers, and 21"D Vanity Cabinets. Note: ROD's added to a cabinet less than 24"D or in combination with a CUT- depth modification will incur a CUT-ROD surcharge.*
- *Increased depth of Rollout drawers are by custom request only. Custom quote required.*

INTERIOR ROLL OUT FOR 2 DRAWER BASE

ITEM
ROD-DB24-2 ILLUME
ROD-DB27-2 ILLUME
ROD-DB30-2 ILLUME
ROD-DB33-2 ILLUME
ROD-DB36-2 ILLUME

- *Available for 2 Drawer Base Cabinet Only*
- *Features Blum MERIVOBOX Metal Roll-Out with Full-Extension Soft-Close Slides*
- *Includes latch handle that locks into the top drawer, allowing both drawers to open simultaneously (lock can be enabled/disabled with coin)*

Note: Includes installation in top drawer only. Cabinet is not included.

Base Accessories

BPOBLB42/45-L ILLUME

BLIND BASE PULL OUT

ITEM
BPO-BLB42/45-R ILLUME
BPO-BLB42/45-L ILLUME
BPO-BLB48/51-R ILLUME
BPO-BLB48/51-L ILLUME

- *Cabinet not included, cabinet must be ordered separately*
- *Includes two trays per accessory*
- *Available for Drawer and Door and Full Height Door cabinets*
- *Load Capacity: 55lb (25kg) per tray*
- *Gray/Chrome Finish*

SPOB09 ILLUME

SPICE PULL OUT

ITEM
SPO-B9 ILLUME
SPO-B12 ILLUME
SPO-B15 ILLUME
SPO-B18 ILLUME

- *Cabinet not included, cabinet must be ordered separately*
- *Includes two baskets per accessory*
- *Load Capacity: 60 lb (27kg)*
- *Gray/Chrome Finish*

18" HEAVY DUTY MIXER LIFT

ITEM
MLU-B18 ILLUME

- *Cabinet not included; cabinet must be ordered separately*
- *Soft-close mechanism features built-in shock dampeners with adjustable spring tension*
- *Load Capacity: 60 lb (27kg)*
- *Orion Gray Steel Mechanism with Walnut Wood Block Shelf*
- *Shelf is 20"(L) x 13-1/4" (W) x 1-3/8" (H)*

NOTE: For B18FD Only. Will not work in a door/drawer configuration.

Base Accessories

DOOR MOUNTED PULL OUT

ITEM
DMPO-B12 ILLUME
DMPO-B15 ILLUME
DMPO-B18 ILLUME
DMPO-B21 ILLUME
DMPO-B09FD ILLUME
DMPO-B12FD ILLUME
DMPO-B15FD ILLUME
DMPO-B18FD ILLUME
DMPO-B21FD ILLUME

- *Includes two adjustable trays (shipped loose)*

Note: Frame includes installation when ordered as an accessory on a cabinet. Cabinet is not included.

YOUBOX PULL OUT

ITEM
UBPO-B12 ILLUME
UBPO-B15 ILLUME
UBPO-B18 ILLUME
UBPO-B12FD ILLUME
UBPO-B15FD ILLUME
UBPO-B18FD ILLUME

- *Features:*
  - two 1L storage boxes with lids
  - two 2.1L storage boxes
  - one large divider
  - two traverse rails
- *Includes two adjustable trays (shipped loose)*

Note: Frame includes installation when ordered as an accessory on a cabinet. Cabinet is not included.

Base Accessories

UTILITY & KNIFE PULL OUT

ITEM
UKBPO-B12 ILLUME
UKBPO-B15 ILLUME
UKBPO-B18 ILLUME
UKBPO-B12FD ILLUME
UKBPO-B15FD ILLUME
UKBPO-B18FD ILLUME

- *Features:*
  - utility frame
  - four storage boxes
  - one knife block insert
- *Includes two adjustable trays (shipped loose)*

Note: Frame includes installation when ordered as an accessory on a cabinet. Cabinet is not included.

PAPER TOWEL PULL OUT

ITEM
PTPO-B12 ILLUME
PTPO-B09FD ILLUME
PTPO-B12FD ILLUME

- *Features:*
  - paper towel holder frame
  - one 1L storage box
- *Includes two adjustable trays (shipped loose)*

Note: Frame includes installation when ordered as an accessory on a cabinet. Cabinet is not included.

Base Accessories

BAKER TRAY PULL OUT

ITEM
BTPO-B12 ILLUME
BTPO-B09FD ILLUME
BTPO-B12FD ILLUME

- *Features:*
  - one metal shelf
  - two wire racks
  - elastic bumpers
  - plastic clips

Note: Frame includes installation when ordered as an accessory on a cabinet. Cabinet is not included.

HPO-18

HPO-24

HAMPER PULL OUT

ITEM
HPO-18 ILLUME
HPO-24 ILLUME

- *Cabinet not included, cabinet must be ordered separately*
- *Includes two removable plastic hamper baskets*
- *Total Load Capacity: 100lb (50kg)*

Wall Accessories

FLOATING SHELF - TIMBER

ITEM
FLS24 TIMBER
FLS30 TIMBER
FLS36 TIMBER
FLS42 TIMBER
FLS48 TIMBER
FLS54 TIMBER
FLS60 TIMBER

- *Includes hanging bracket & mounting hardware*

FLOATING SHELF - WALNUT

ITEM
FLS24 WALNUT
FLS30 WALNUT
FLS36 WALNUT
FLS42 WALNUT
FLS48 WALNUT
FLS54 WALNUT
FLS60 WALNUT

- *Includes hanging bracket & mounting hardware*

Wall Accessories

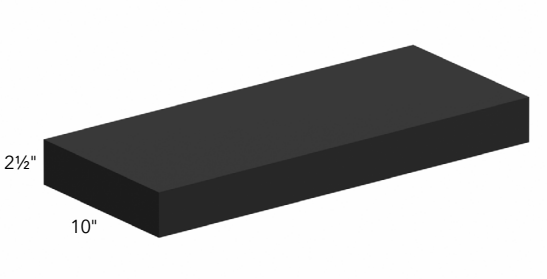

FLOATING SHELF - BLACK MATTE

ITEM
FLS24 BLACK M
FLS30 BLACK M
FLS36 BLACK M
FLS42 BLACK M
FLS48 BLACK M
FLS54 BLACK M
FLS60 BLACK M

- *Includes hanging bracket & mounting hardware*

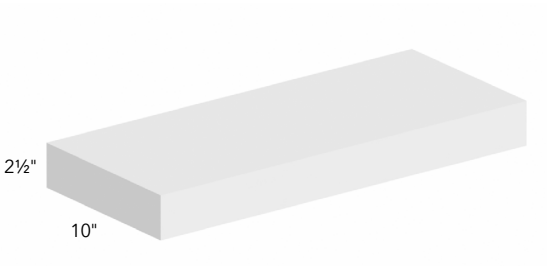

FLOATING SHELF - WHITE MATTE

ITEM
FLS24 WHITE M
FLS30 WHITE M
FLS36 WHITE M
FLS42 WHITE M
FLS48 WHITE M
FLS54 WHITE M
FLS60 WHITE M

- *Includes hanging bracket & mounting hardware*

Wall Accessories

LAZY SUSAN TWISTER

ITEM
LSTS24 30 ILLUME
LSTS24 36 ILLUME
LSTS24 39/42 ILLUME

- *LSTS24 30 ILLUME: Includes two twister trays (shipped loose)*
- *LSTS24 36/39/42 ILLUME: Includes three twister trays (shipped loose)*

Note: Frame includes installation when ordered as an accessory on a cabinet. Cabinet is not included.

PULL DOWN SHELF

ITEM
PDS-W24 ILLUME
PDS-W36 ILLUME

- *Cabinet not included, cabinet must be ordered separately*
- *Features two chrome wire shelves*
- *Gas-assisted lifting/lowering mechanism*
- *Pulls down 11-1/2" and out 16-3/4"*
- *Load Capacity: 17lb*

NOTE: For 24/36"W x 30/36/42"H Wall Cabinets only.

Waste Solutions

TRASH CAN

ITEM
TC15 ILLUME
TC18 ILLUME
TC21 ILLUME

- *Cabinet not included, cabinet must be ordered separately*
- *TC15 = one 35qt can + 1 bag bin*
  TC18 & TC21 = two 35qt cans
- *MERIVOBOX Drawer*
- *175lb static, 150lb dynamic load rating*

TRASH CAN FULL-HEIGHT DOOR

ITEM
TC15FHD ILLUME
TC18FHD ILLUME
TC21FHD ILLUME

- *Cabinet not included, cabinet must be ordered separately*
- *TC15FHD = one 50qt can + 1 bag bin*
  TC18FHD & TC21FHD = two 50qt cans
- *MERIVOBOX Drawer*
- *175lb static, 150lb dynamic load rating*

Sink Accessories

TILT OUT

ITEM
TILTOUT 11"
TILTOUT 14"
TILTOUT 24"

- *TILOUT 11 - available for SB27*, VSB27**
- *TILTOUT 14 - available for SB21, SB24, SB24SD, SB33*, SB36*, VSB24, VSB24SD, VSB33*, VSB36**
- *TILTOUT 24 - SB30, VSB30*

  ** 2 trays*

SBPO1-21/36 ILLUME

SBPO3-21/36 ILLUME

SINK BASE PULL OUT

ITEM
SBPO1-21/36 ILLUME
SBPO3-21/36 ILLUME

- *SBPO1-21/36 ILLUME Features:*
  - one removable basket with handle
  - four dividers
- *SBPO3-21/36 ILLUME Features:*
  - one removable basket with handle
  - one basket without handle
  - one swivel basket
  - eight dividers

Note: Frame includes installation when ordered as an accessory on a cabinet. Cabinet is not included.

Sink & Appliance Accessories

SINK MAT

ITEM
UNDER SINK MAT

- *Product will be cut to size when purchased as accessory for cabinet.*
- *Product Purchased Separately will ship loose in 48"x30" Sheets.*
- *Grey waterproof polystyrene mat with stainless steel detail*

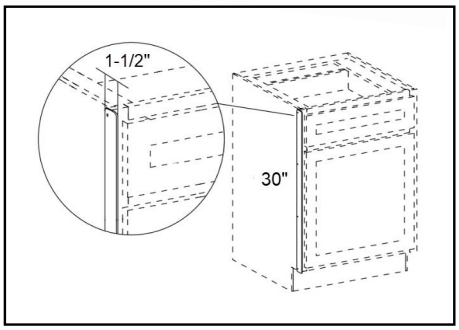

ILLUME HEAT SHIELD

ITEM
HEAT SHIELD WHITE

- *1/16" thick powder-coated steel with pre-drilled installation holes.*
- *Required in order to shield the Illume Laminate Cabinet Box from adjacent oven heat.*
- *Sold individually; must order quantity of 2.*

NOTE: This item is required when installing cabinets on either side of a heating appliance (for example a Range). Fabuwood does not take responsibility for failure to order this item and will not warranty Illume Cabinetry that has not been installed with the heat shield adjacent to a heating appliance.

Drawer Accessories

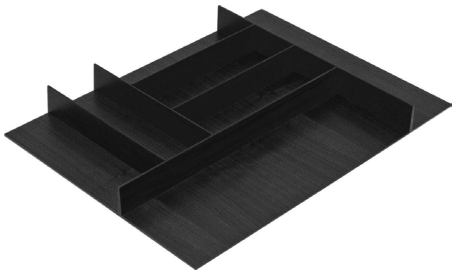

TRIMMABLE SMALL CUTLERY DIVIDER

ITEM
CD-S ILLUME

- *Black ash finish*
- *Fits 1 insert*

NOTE: Ensure inserts are ordered according to the specific capacity of each cutlery divider

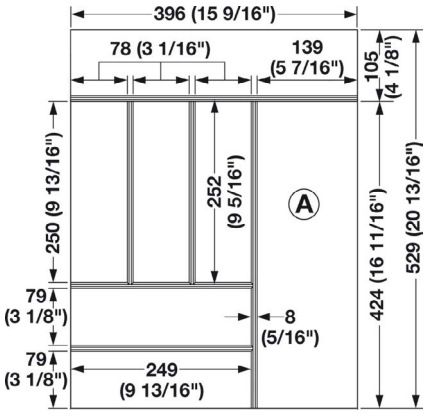

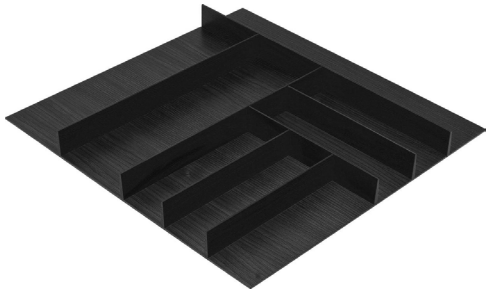

TRIMMABLE MEDIUM CUTLERY DIVIDER

ITEM
CD-M ILLUME

- *Black ash finish*
- *Fits 2 inserts*

NOTE: Ensure inserts are ordered according to the specific capacity of each cutlery divider

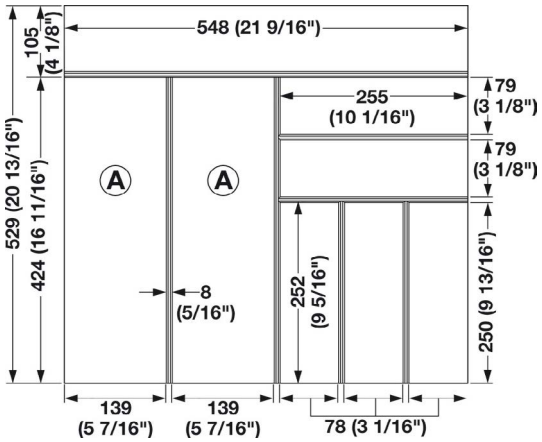

Drawer Accessories

TRIMMABLE LARGE CUTLERY DIVIDER

ITEM
CD-L ILLUME

- *Black ash finish*
- *Fits 2 inserts*

NOTE: Ensure inserts are ordered according to the specific capacity of each cutlery divider

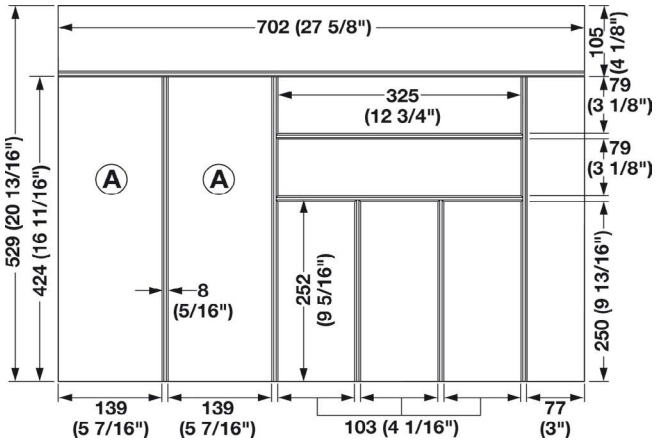

TRIMMABLE EXTRA LARGE CUTLERY DIVIDER

ITEM
CD-XL ILLUME

- *Black ash finish*
- *Fits 3 inserts*

NOTE: Ensure inserts are ordered according to the specific capacity of each cutlery divider

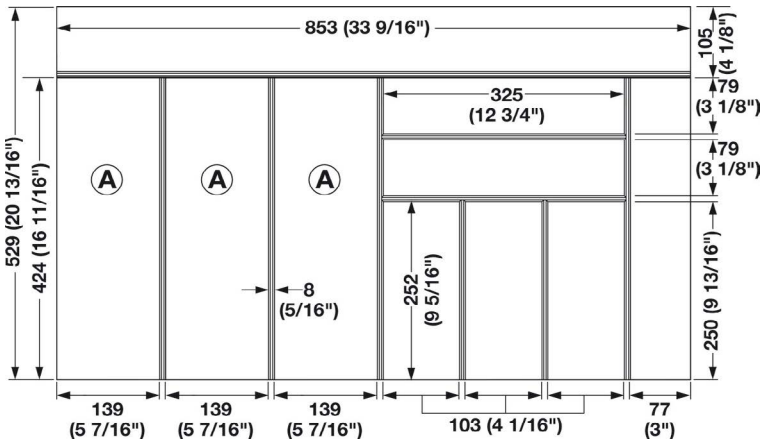

Drawer Accessories

CROSS DIVIDER INSERT

ITEM
CD-CDI ILLUME

- *Black ash finish*

NOTE: Ensure inserts are ordered according to the specific capacity of each cutlery divider

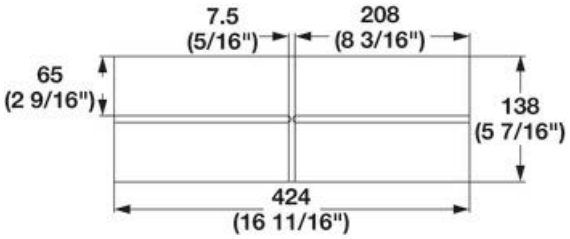

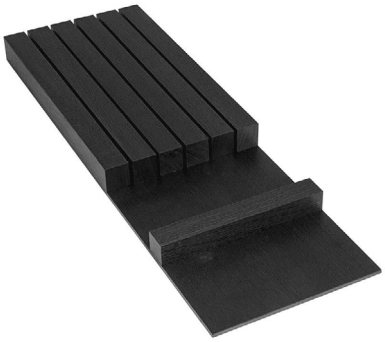

KNIFE INSERT

ITEM
CD-KI ILLUME

- *Black ash finish*

NOTE: Ensure inserts are ordered according to the specific capacity of each cutlery divider

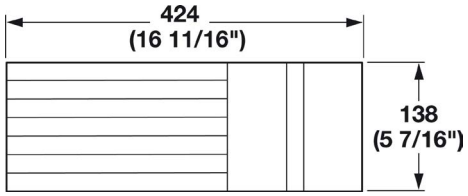

SPICE INSERT

ITEM
CD-SI ILLUME

- *Black ash finish*

NOTE: Ensure inserts are ordered according to the specific capacity of each cutlery divider

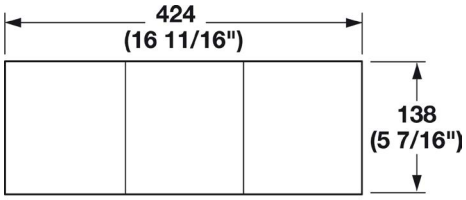

Fillers

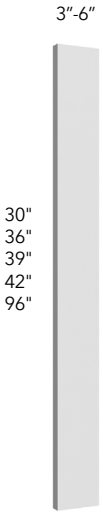

WALL, TALL & BASE

ITEM
WF330
WF336
WF339
WF342
WF630
WF636
WF639
WF642
TF396
TF696
BF3*
BF6*

- *Fillers are finished on two sides and edge-banded on all four edges*

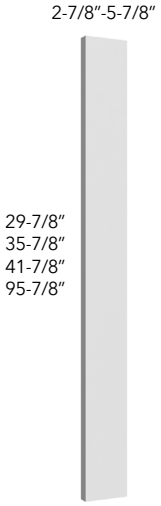

OVERLAY FILLER

ITEM
OLF330
OLF336
OLF342
OLF384
OLF390
OLF396
OLF630
OLF636
OLF642

- *Fillers are finished on two sides and edge-banded on all four edges*

Fillers

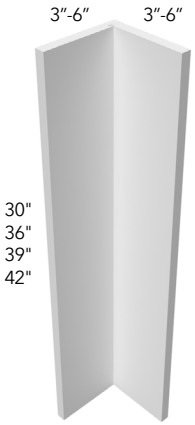

CORNER FILLER

ITEM
CF330
CF336
CF339
CF342
CF630
CF636
CF639
CF642

Columns

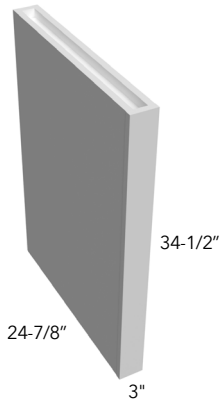

BASE COLUMN

ITEM
CLM-BASE

- *Sides are flush finished*
- *Back is unfinished*

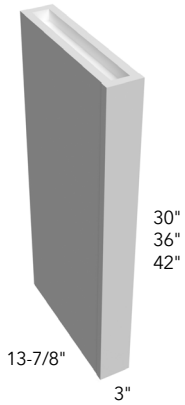

WALL COLUMNS

ITEM
CLM-30
CLM-36
CLM-39
CLM-42

- *Sides are flush finished*
- *Back is unfinished*

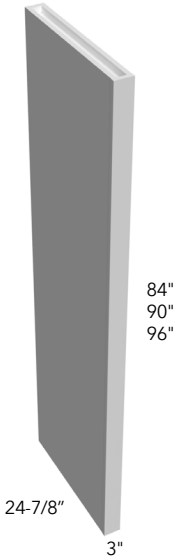

TALL COLUMN

ITEM
CLM-84
CLM-90
CLM-93
CLM-96

- *Sides are flush finished*
- *Back is unfinished*

End Panels

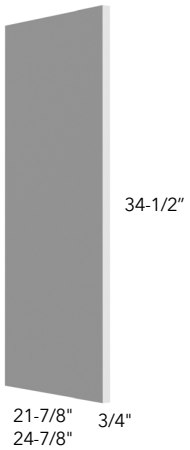

BASE END PANEL

ITEM
BEP
VBEP

* *Finished on two sides and edge-banded on all four edges*
- *Additional Edge-Band available for purchase*
- *BEP: 24-7/8"W x 34-1/2"H*
- *VBEP: 21-7/8"W x 34-1/2"H*

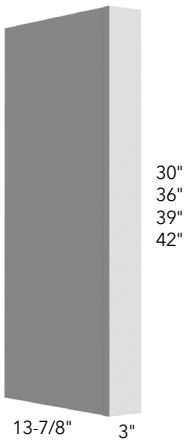

WALL END PANEL

ITEM
WEP1430 x 3
WEP1436 x 3
WEP1439 X 3
WEP1442 x 3

* *Finished on two sides and edge-banded on all four edges*
- *End panels with filler have flush finished sides and edge-banding on all four edges*
- *Additional Edge-Band available for purchase*

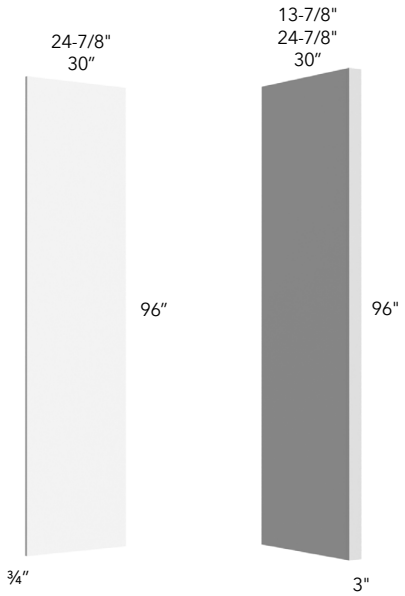

REFRIGERATOR END PANEL

ITEM
TEP*
REP2596*
REP3096*
REP1496 x 3
REP2596 x 3
REP3096 x 3

* *Finished on two sides and edge-banded on all four edges*
- *Edge-banded all around*
- *End panels with filler have flush finished sides and edge-banding on all four edges*
- *Additional Edge-Band available for purchase*

Panels

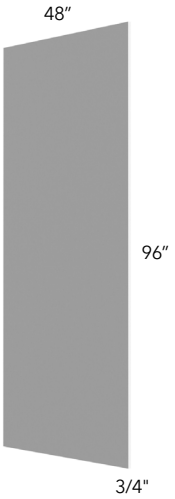

MDF

ITEM
PAN-3/4
PAN-3/4 4X9

- *PAN-3/4: Signature Matte & Gloss Colors only*
- *PAN-3/4 4X9: Designer Collection Colors & Signature Textured Colors only*
- *Front side has full finish; Back side has reduced detail, matte finish*
- *No edge-band*

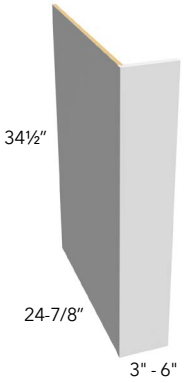

DISHWASHER RETURN END PANEL

ITEM
DWR3
DWR6

- *Dishwasher End Panels with filler have flush finished sides and edge-banding on all four edges*
- *Additional Edge-Band available for purchase*

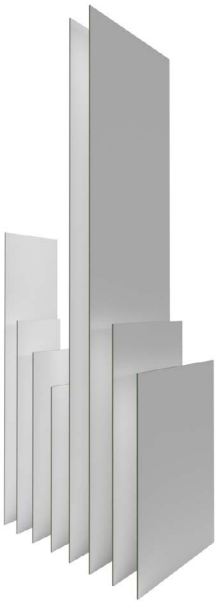

FINISHED END SKIN

ITEM
SK BASE
SK MC
SK TALL
SK T13D
SK W30
SK W36
SK W42
SK WD

- *1/16" thick skin has peel off adhesive backing*
- *Skin Dimensions:*
  - *SK BASE: 24" x 30"*
  - *SK MC: 20" x 42"*
  - *SK TALL: 24" x 96"*
  - *SK T13D: 13" x 96"*
  - *SK W30: 13" x 30"*
  - *SK W36: 13" x 36"*
  - *SK W42: 13" x 42"*
  - *SK WD: 15" x 60"*

Wainscot Panels

BASE / VANITY

21-7/8"
24-7/8"

WALL / MC

30"
36"
39"
42"

13-7/8"
21-7/8"

WALL DRAWER

48"
54"
57"
60"

15-7/8"

WAINSCOT PANEL - BASE & WALL

ITEM
WP-BASE
WP-VBASE
WP-W12
WP-W15
WP-W18
WP-W21
WP-W24
WP-W30
WP-W36
WP-W39
WP-W42
WP-MC30
WP-MC36
WP-MC39
WP-MC42
WP-WD48
WP-WD54
WP-WD57
WP-WD60
WP-W1224D
WP-W1524D
WP-W1824D
WP-W2124D
WP-W2424D

- *Same profile as cabinet door (3/4" thick)*
- *Dimensions:*
  Base: 24-7/8"W x 30"H
  Vanity Base (21"D): 21-7/8"W x 30"H
  Wall (13"D): 13-7/8"W x 30"H / 36"H / 42"H
  Wall (24"D): 24-7/8"W x 12"H / 15"H / 18"H / 24"H
  Wall Microwave (21"D): 21-7/8"W x 30"H / 36"H / 42"H
  Wall Drawer (15"D): 15-7/8"W x 48"H / 54"H / 60"H

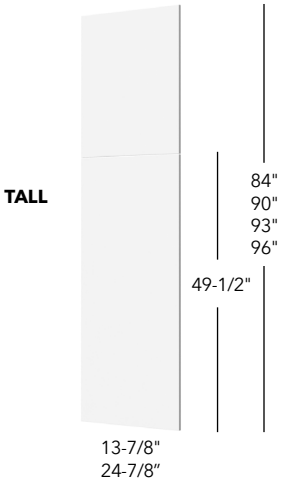

WAINSCOT PANEL - TALL

ITEM
WP-T84
WP-T90
WP-T93
WP-T96
WP-T8413D
WP-T9013D
WP-T9313D
WP-T9613D

- *Same profile as cabinet door (3/4" thick)*
- *Dimensions:*
  Tall (13"D): 13-7/8"W x 84"H / 90"H / 96"H
  Note: Bottom door is 49-1/2"H
  Tall (24"D): 24-7/8"W x 84"H / 90"H / 96"H
  Note: Bottom door is 49-1/2"H

Moldings (8')

TOE KICK

ITEM
TK8-3/4
BBM

- *Edge-banded on all 4 edges*
- *Additional Edge-Band available for purchase*

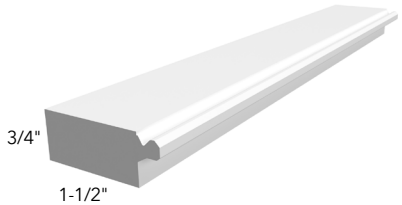

STARTER

ITEM
STRM-8

LIGHT RAIL

ITEM
LRM

- *Use with STRM-8 to install LRM to be flushed with front of door*

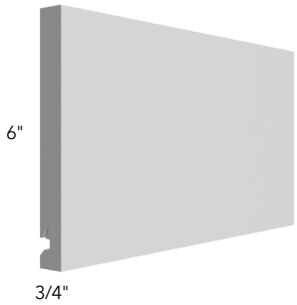

STRAIGHT VALANCE

ITEM
VST-6

- *Use STRM-8 for Soffit build-up*

EXAMPLES OF STRM-8 APPLICATION:

LRM + STRM-8

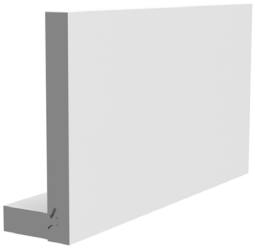

VST-6 + STRM-8

Cabinet Lighting

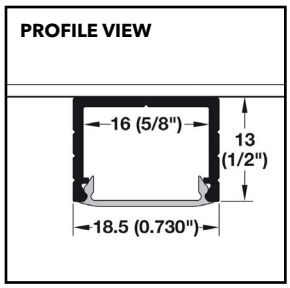

UNDER CABINET LED

ITEM
LED W09
LED W12
LED W15
LED W18
LED W21
LED W24
LED W27
LED W30
LED W33
LED W36
LED W39

- *Dimmable. Settings allow for adjustment between Warm White to Cool White lighting*
- *Light temperature range of 2700-5000K*
- *LED Lighting bars are designed to be surface-mounted underneath a wall cabinet*
- *Consists of an aluminum channel housing with diffuser cover*
- *Requires Driver, Mesh Connector, & Recommended Light Switch (purchased separately).*

Note: Installation by a qualified cabinetry installer or electrician is recommended.

Cabinet Lighting

FLOATING SHELF WITH LED - TIMBER

ITEM
LED FLS24 TIMBER
LED FLS30 TIMBER
LED FLS36 TIMBER
LED FLS42 TIMBER
LED FLS48 TIMBER
LED FLS54 TIMBER
LED FLS60 TIMBER

FLOATING SHELF WITH LED - WALNUT

ITEM
LED FLS24 WALNUT
LED FLS30 WALNUT
LED FLS36 WALNUT
LED FLS42 WALNUT
LED FLS48 WALNUT
LED FLS54 WALNUT
LED FLS60 WALNUT

LED FLS30 WALNUT SHOWN

- *Dimmable. Settings allow for adjustment between Warm White to Cool White lighting*
- *Light temperature range of 2700-5000K*
- *Floating shelves include a Light Bar with 6.5ft Lead and a 6.5ft Extension Lead*
- *LED Light Bar for Floating Shelves ship loose and are to be installed in the field*
- *Channel is pre-routed to accommodate LED light bar installation*
- *Floating Shelves with LED are available in Stock Paint and Stain Finishes, Walnut and are to be specified at time of order. For Finishing to a custom color, must be ordered as Dove or Frost.*
- *Requires Driver, Mesh Connector, & Recommended Light Switch (purchased separately).*

Note: Installation by a qualified cabinetry installer or electrician is recommended.

Cabinet Lighting

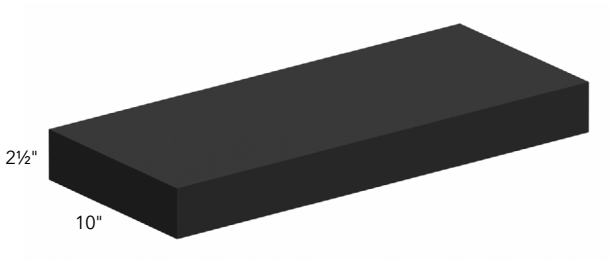

FLOATING SHELF WITH LED - BLACK MATTE

ITEM
LED FLS24 BLACK M
LED FLS30 BLACK M
LED FLS36 BLACK M
LED FLS42 BLACK M
LED FLS48 BLACK M
LED FLS54 BLACK M
LED FLS60 BLACK M

FLOATING SHELF WITH LED - WHITE MATTE

ITEM
LED FLS24 WHITE M
LED FLS30 WHITE M
LED FLS36 WHITE M
LED FLS42 WHITE M
LED FLS48 WHITE M
LED FLS54 WHITE M
LED FLS60 WHITE M

- *Dimmable. Settings allow for adjustment between Warm White to Cool White lighting*
- *Light temperature range of 2700-5000K*
- *Floating shelves include a Light Bar with 6.5ft Lead and a 6.5ft Extension Lead*
- *LED Light Bar for Floating Shelves ship loose and are to be installed in the field*
- *Channel is pre-routed to accommodate LED light bar installation*
- *Floating Shelves with LED are available in Stock Paint and Stain Finishes, Walnut and are to be specified at time of order. For Finishing to a custom color, must be ordered as Dove or Frost.*
- *Requires Driver, Mesh Connector, & Recommended Light Switch (purchased separately).*

Note: Installation by a qualified cabinetry installer or electrician is recommended.

Cabinet Lighting

PUCK LIGHT

COVER CAP

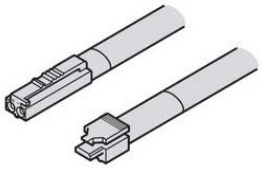

LEAD

PUCK LIGHT SET

ITEM
LED 2-1/4" PUCK

- *Designed to recess into the bottom of a cabinet or soffit box.*
- *Includes puck light, silver cover cap, and lead*
- *Light temperature range of 2700-5000K*
- *Requires Driver, Mesh Connector, & Recommended Light Switch (purchased separately).*

Note: Installation by a qualified cabinetry installer or electrician is recommended.

LED INTERIOR CABINET LIGHTING

ITEM
LED CAB INT 48" STRIP

- *Flexible LED Lighting Strip designed for interior cabinet lighting.*
- *Strip can be trimmed in 2" intervals to fit as needed*
- *Medium Intensity lighting*
- *Requires Driver, Mesh Connector, & Recommended Light Switch (purchased separately).*

Note: Installation by a qualified cabinetry installer or electrician is recommended.

TUNABLE LED STRIP

ITEM
LED STRIP TUNABLE WHITE 10MM

- *Flexible LED Lighting Strip designed for ambient cabinet lighting.*
- *Full length is 86-9/16"*
- *Includes two pre-attached 78-3/4" leads, one on each end*
- *Features uniform light output: LED dots are not visible*
- *Encased in a silicone sleeve eliminating the need for a profile*
- *Strip can be trimmed in 2" intervals to fit as needed*
- *Requires Driver, Mesh Connector, & Recommended Light Switch (purchased separately).*

Note: Installation by a qualified cabinetry installer or electrician is recommended.

Cabinet Lighting

DRIVER

ITEM
LED DRIVER

- *90w Driver 24V*
- *Includes power cord*

Installation by a qualified cabinetry installer or electrician is recommended

MESH CONNECTOR

ITEM
LED MESH CONNECTOR

- *Bluetooth-enabled (can pair with Wall Switch)*
- *2 outputs switched together (1-channel)*

Installation by a qualified cabinetry installer or electrician is recommended

WIRELESS WALL LIGHT SWITCH

ITEM
LED WLS SWITCH

- *Leviton Decora-style Wall Switch with Dimmer Function*

Note: Installation by a qualified cabinetry installer or electrician is recommended.

Metal Glass Door Program

PROFILES

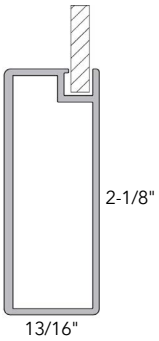

FAB003

- *Shaker style frame*
- *Profile is 54mm (2-1/8") Wide x 20.5mm (13/16") Thick*

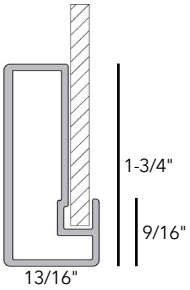

FAB004

- *Shaker-within-shaker style frame, Shaker Frame with Recess, Shaker-style frame with raised*
- *Profile is 45mm (1-3/4") Wide x 20.5mm (13/16") Thick*

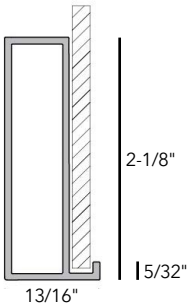

FAB014

- *Wide Frame with Narrow Bezel Edge & Glass Overlay*
- *Profile is 54mm (2-1/8") Wide x 20.5mm (13/16") Thick; the glass insert lays on top of the profile and then 4mm (5/32") bezel detail overlays the glass insert*

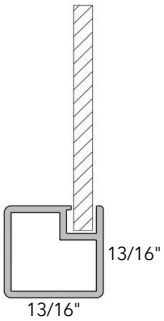

FAB017

- *Profile is 21mm (13/16") Wide x 20.5mm (13/16") Thick*

* *Includes BLUM CLIP-ON Self-Close hinges (Not Soft-Close)*

Metal Glass Door Program

METAL FINISHES

NATURAL ALUMINUM

BRUSHED STAINLESS

ONYX BLACK MATTE

GOLD

GLASS INSERT COLORS

CLEAR

GREY CLEAR

BRONZE CLEAR

SATIN

SKU GUIDE FOR LOOSE DOORS

SKUs in EZPO are created based on Aluminum finish.
The Product Code will include nomenclature for IDMG (Illume Door Metal Glass), followed by the Color Code.

- *IDMG-BLK {Onyx Black Matte}*
- *IDMG-GLD {Gold}*
- *IDMG-NAL {Natural Aluminum}*
- *IDMG-BRS {Brushed Stainless}*

Then, the cabinet product code will follow.

- *Example:* ***IDMG-BLK W1830*** *(Illume Door Metal Glass for W1830)*

Metal Glass Doors

ONYX BLACK MATTE

ITEM
IDMG-BLK MC303921
IDMG-BLK MC304221
IDMG-BLK W0930
IDMG-BLK W0936
IDMG-BLK W0939
IDMG-BLK W0942
IDMG-BLK W1218
IDMG-BLK W1230
IDMG-BLK W1236
IDMG-BLK W1239
IDMG-BLK W1242
IDMG-BLK W1518
IDMG-BLK W1530
IDMG-BLK W1536
IDMG-BLK W1539
IDMG-BLK W1542
IDMG-BLK W1818
IDMG-BLK W1830
IDMG-BLK W1836
IDMG-BLK W1839
IDMG-BLK W1842
IDMG-BLK W2118
IDMG-BLK W2130
IDMG-BLK W2136
IDMG-BLK W2139
IDMG-BLK W2142
IDMG-BLK W2412
IDMG-BLK W2418
IDMG-BLK W2421
IDMG-BLK W2424
IDMG-BLK W2430
IDMG-BLK W2430SD
IDMG-BLK W2436
IDMG-BLK W2436SD
IDMG-BLK W2439
IDMG-BLK W2439SD
IDMG-BLK W2442
IDMG-BLK W2442SD
IDMG-BLK W2718
IDMG-BLK W2730
IDMG-BLK W2736
IDMG-BLK W2739
IDMG-BLK W2742
IDMG-BLK W3012
IDMG-BLK W3015
IDMG-BLK W3018
IDMG-BLK W3021
IDMG-BLK W3024

ITEM
IDMG-BLK W3030
IDMG-BLK W3036
IDMG-BLK W3039
IDMG-BLK W3042
IDMG-BLK W3312
IDMG-BLK W3315
IDMG-BLK W3318
IDMG-BLK W3321
IDMG-BLK W3324
IDMG-BLK W3330
IDMG-BLK W3336
IDMG-BLK W3339
IDMG-BLK W3342
IDMG-BLK W3612
IDMG-BLK W3615
IDMG-BLK W3618
IDMG-BLK W3621
IDMG-BLK W3624
IDMG-BLK W3630
IDMG-BLK W3636
IDMG-BLK W3639
IDMG-BLK W3642
IDMG-BLK WBC2730
IDMG-BLK WBC2736
IDMG-BLK WBC2739
IDMG-BLK WBC2742
IDMG-BLK WBC3030
IDMG-BLK WBC3036
IDMG-BLK WBC3039
IDMG-BLK WBC3042
IDMG-BLK WBC3630
IDMG-BLK WBC3636
IDMG-BLK WBC3639
IDMG-BLK WBC3642
IDMG-BLK WD1848
IDMG-BLK WD1854
IDMG-BLK WD1857
IDMG-BLK WD1860
IDMG-BLK WD2448
IDMG-BLK WD2454
IDMG-BLK WD2457
IDMG-BLK WD2460
IDMG-BLK WDC2415
IDMG-BLK WDC2418
IDMG-BLK WDC2430
IDMG-BLK WDC2436
IDMG-BLK WDC2439
IDMG-BLK WDC2442

Metal Glass Doors

BRUSHED STAINLESS

ITEM
IDMG-BRS MC303921
IDMG-BRS MC304221
IDMG-BRS W0930
IDMG-BRS W0936
IDMG-BRS W0939
IDMG-BRS W0942
IDMG-BRS W1218
IDMG-BRS W1230
IDMG-BRS W1236
IDMG-BRS W1239
IDMG-BRS W1242
IDMG-BRS W1518
IDMG-BRS W1530
IDMG-BRS W1536
IDMG-BRS W1539
IDMG-BRS W1542
IDMG-BRS W1818
IDMG-BRS W1830
IDMG-BRS W1836
IDMG-BRS W1839
IDMG-BRS W1842
IDMG-BRS W2118
IDMG-BRS W2130
IDMG-BRS W2136
IDMG-BRS W2139
IDMG-BRS W2142
IDMG-BRS W2412
IDMG-BRS W2418
IDMG-BRS W2421
IDMG-BRS W2424
IDMG-BRS W2430
IDMG-BRS W2430SD
IDMG-BRS W2436
IDMG-BRS W2436SD
IDMG-BRS W2439
IDMG-BRS W2439SD
IDMG-BRS W2442
IDMG-BRS W2442SD
IDMG-BRS W2718
IDMG-BRS W2730
IDMG-BRS W2736
IDMG-BRS W2739
IDMG-BRS W2742
IDMG-BRS W3012
IDMG-BRS W3015
IDMG-BRS W3018
IDMG-BRS W3021
IDMG-BRS W3024

ITEM
IDMG-BRS W3030
IDMG-BRS W3036
IDMG-BRS W3039
IDMG-BRS W3042
IDMG-BRS W3312
IDMG-BRS W3315
IDMG-BRS W3318
IDMG-BRS W3321
IDMG-BRS W3324
IDMG-BRS W3330
IDMG-BRS W3336
IDMG-BRS W3339
IDMG-BRS W3342
IDMG-BRS W3612
IDMG-BRS W3615
IDMG-BRS W3618
IDMG-BRS W3621
IDMG-BRS W3624
IDMG-BRS W3630
IDMG-BRS W3636
IDMG-BRS W3639
IDMG-BRS W3642
IDMG-BRS WBC2730
IDMG-BRS WBC2736
IDMG-BRS WBC2739
IDMG-BRS WBC2742
IDMG-BRS WBC3030
IDMG-BRS WBC3036
IDMG-BRS WBC3039
IDMG-BRS WBC3042
IDMG-BRS WBC3630
IDMG-BRS WBC3636
IDMG-BRS WBC3639
IDMG-BRS WBC3642
IDMG-BRS WD1848
IDMG-BRS WD1854
IDMG-BRS WD1857
IDMG-BRS WD1860
IDMG-BRS WD2448
IDMG-BRS WD2454
IDMG-BRS WD2457
IDMG-BRS WD2460
IDMG-BRS WDC2415
IDMG-BRS WDC2418
IDMG-BRS WDC2430
IDMG-BRS WDC2436
IDMG-BRS WDC2439
IDMG-BRS WDC2442

Metal Glass Doors

GOLD

ITEM
IDMG-GLD MC303921
IDMG-GLD MC304221
IDMG-GLD W0930
IDMG-GLD W0936
IDMG-GLD W0939
IDMG-GLD W0942
IDMG-GLD W1218
IDMG-GLD W1230
IDMG-GLD W1236
IDMG-GLD W1239
IDMG-GLD W1242
IDMG-GLD W1518
IDMG-GLD W1530
IDMG-GLD W1536
IDMG-GLD W1539
IDMG-GLD W1542
IDMG-GLD W1818
IDMG-GLD W1830
IDMG-GLD W1836
IDMG-GLD W1839
IDMG-GLD W1842
IDMG-GLD W2118
IDMG-GLD W2130
IDMG-GLD W2136
IDMG-GLD W2139
IDMG-GLD W2142
IDMG-GLD W2412
IDMG-GLD W2418
IDMG-GLD W2421
IDMG-GLD W2424
IDMG-GLD W2430
IDMG-GLD W2430SD
IDMG-GLD W2436
IDMG-GLD W2436SD
IDMG-GLD W2439
IDMG-GLD W2439SD
IDMG-GLD W2442
IDMG-GLD W2442SD
IDMG-GLD W2718
IDMG-GLD W2730
IDMG-GLD W2736
IDMG-GLD W2739
IDMG-GLD W2742
IDMG-GLD W3012
IDMG-GLD W3015
IDMG-GLD W3018
IDMG-GLD W3021
IDMG-GLD W3024

ITEM
IDMG-GLD W3030
IDMG-GLD W3036
IDMG-GLD W3039
IDMG-GLD W3042
IDMG-GLD W3312
IDMG-GLD W3315
IDMG-GLD W3318
IDMG-GLD W3321
IDMG-GLD W3324
IDMG-GLD W3330
IDMG-GLD W3336
IDMG-GLD W3339
IDMG-GLD W3342
IDMG-GLD W3612
IDMG-GLD W3615
IDMG-GLD W3618
IDMG-GLD W3621
IDMG-GLD W3624
IDMG-GLD W3630
IDMG-GLD W3636
IDMG-GLD W3639
IDMG-GLD W3642
IDMG-GLD WBC2730
IDMG-GLD WBC2736
IDMG-GLD WBC2739
IDMG-GLD WBC2742
IDMG-GLD WBC3030
IDMG-GLD WBC3036
IDMG-GLD WBC3039
IDMG-GLD WBC3042
IDMG-GLD WBC3630
IDMG-GLD WBC3636
IDMG-GLD WBC3639
IDMG-GLD WBC3642
IDMG-GLD WD1848
IDMG-GLD WD1854
IDMG-GLD WD1857
IDMG-GLD WD1860
IDMG-GLD WD2448
IDMG-GLD WD2454
IDMG-GLD WD2457
IDMG-GLD WD2460
IDMG-GLD WDC2415
IDMG-GLD WDC2418
IDMG-GLD WDC2430
IDMG-GLD WDC2436
IDMG-GLD WDC2439
IDMG-GLD WDC2442

Metal Glass Doors

NATURAL ALUMINUM

ITEM
IDMG-NAL MC303921
IDMG-NAL MC304221
IDMG-NAL W0930
IDMG-NAL W0936
IDMG-NAL W0939
IDMG-NAL W0942
IDMG-NAL W1218
IDMG-NAL W1230
IDMG-NAL W1236
IDMG-NAL W1239
IDMG-NAL W1242
IDMG-NAL W1518
IDMG-NAL W1530
IDMG-NAL W1536
IDMG-NAL W1539
IDMG-NAL W1542
IDMG-NAL W1818
IDMG-NAL W1830
IDMG-NAL W1836
IDMG-NAL W1839
IDMG-NAL W1842
IDMG-NAL W2118
IDMG-NAL W2130
IDMG-NAL W2136
IDMG-NAL W2139
IDMG-NAL W2142
IDMG-NAL W2412
IDMG-NAL W2418
IDMG-NAL W2421
IDMG-NAL W2424
IDMG-NAL W2430
IDMG-NAL W2430SD
IDMG-NAL W2436
IDMG-NAL W2436SD
IDMG-NAL W2439
IDMG-NAL W2439SD
IDMG-NAL W2442
IDMG-NAL W2442SD
IDMG-NAL W2718
IDMG-NAL W2730
IDMG-NAL W2736
IDMG-NAL W2739
IDMG-NAL W2742
IDMG-NAL W3012
IDMG-NAL W3015
IDMG-NAL W3018
IDMG-NAL W3021
IDMG-NAL W3024

ITEM
IDMG-NAL W3030
IDMG-NAL W3036
IDMG-NAL W3039
IDMG-NAL W3042
IDMG-NAL W3312
IDMG-NAL W3315
IDMG-NAL W3318
IDMG-NAL W3321
IDMG-NAL W3324
IDMG-NAL W3330
IDMG-NAL W3336
IDMG-NAL W3339
IDMG-NAL W3342
IDMG-NAL W3612
IDMG-NAL W3615
IDMG-NAL W3618
IDMG-NAL W3621
IDMG-NAL W3624
IDMG-NAL W3630
IDMG-NAL W3636
IDMG-NAL W3639
IDMG-NAL W3642
IDMG-NAL WBC2730
IDMG-NAL WBC2736
IDMG-NAL WBC2739
IDMG-NAL WBC2742
IDMG-NAL WBC3030
IDMG-NAL WBC3036
IDMG-NAL WBC3039
IDMG-NAL WBC3042
IDMG-NAL WBC3630
IDMG-NAL WBC3636
IDMG-NAL WBC3639
IDMG-NAL WBC3642
IDMG-NAL WD1848
IDMG-NAL WD1854
IDMG-NAL WD1857
IDMG-NAL WD1860
IDMG-NAL WD2448
IDMG-NAL WD2454
IDMG-NAL WD2457
IDMG-NAL WD2460
IDMG-NAL WDC2415
IDMG-NAL WDC2418
IDMG-NAL WDC2430
IDMG-NAL WDC2436
IDMG-NAL WDC2439
IDMG-NAL WDC2442

Height Alignment Guide

84" Height Alignment

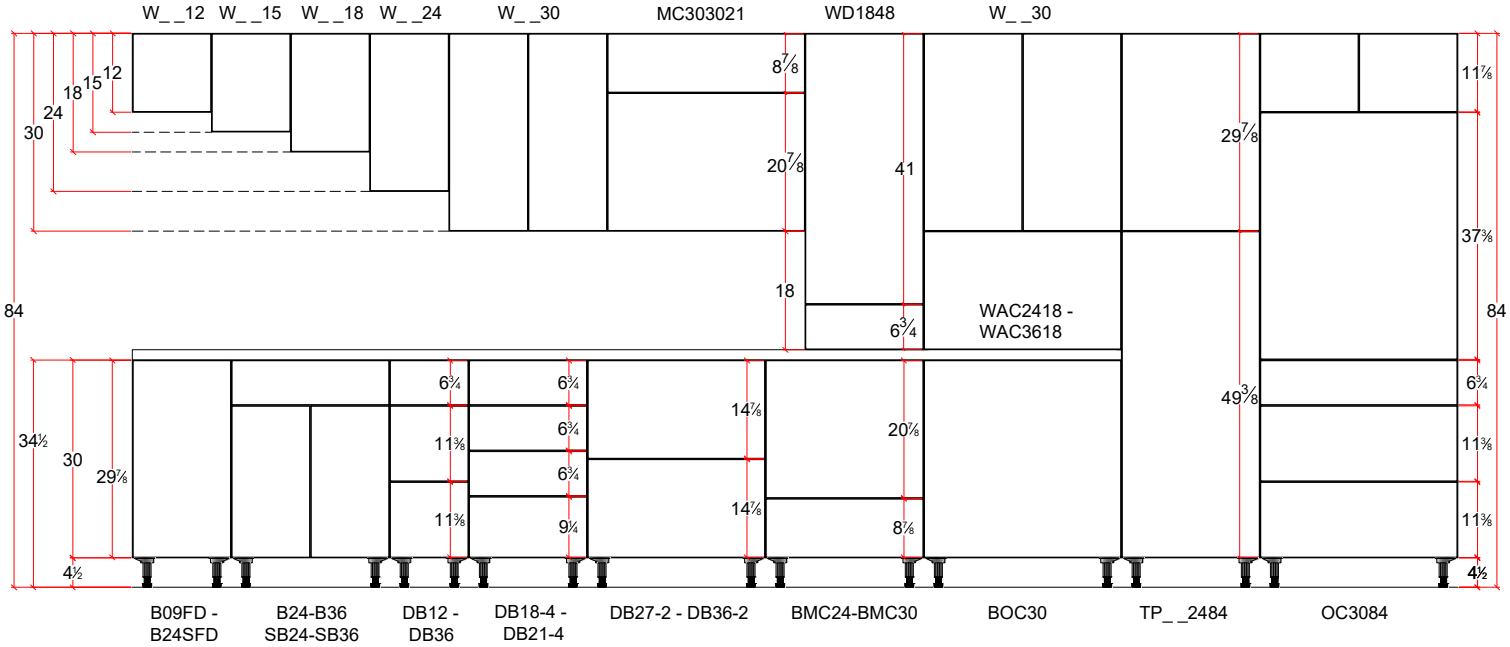

90" Height Alignment

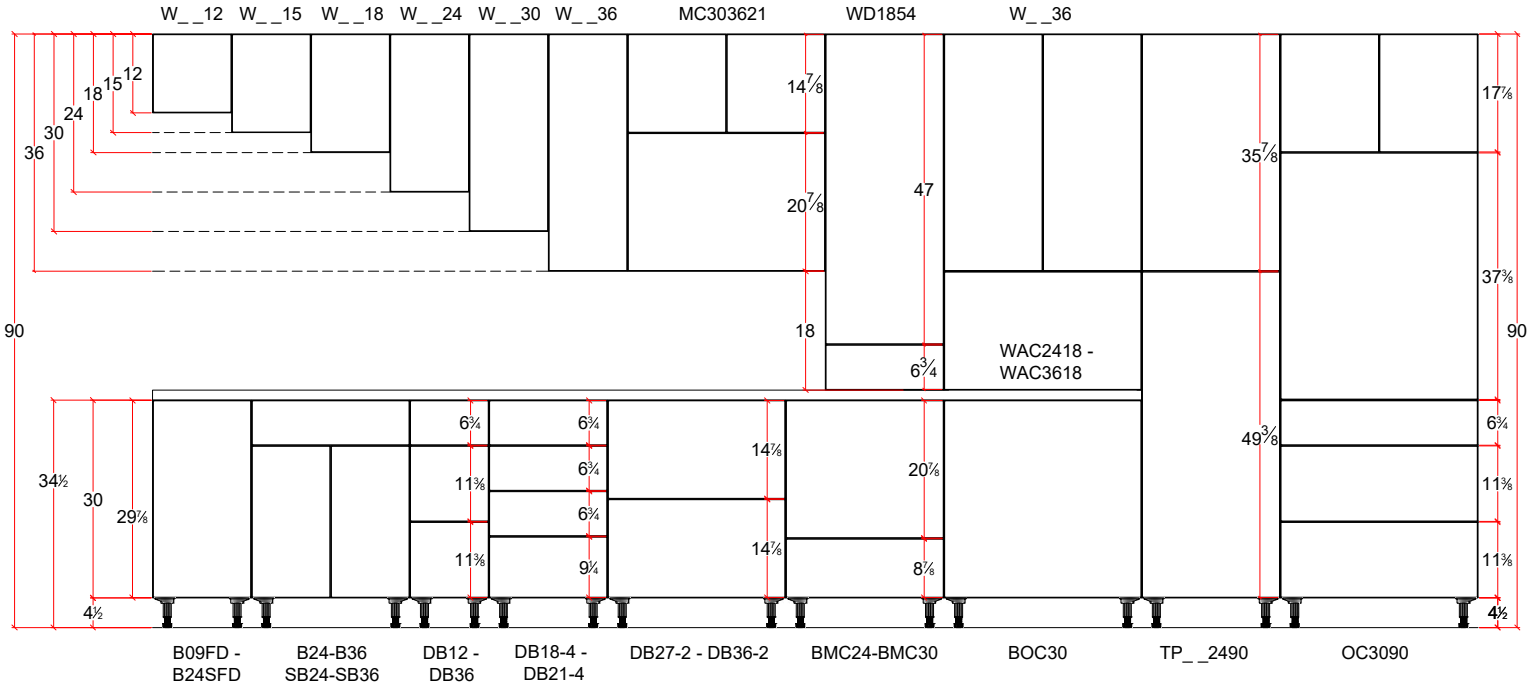

96" Height Alignment

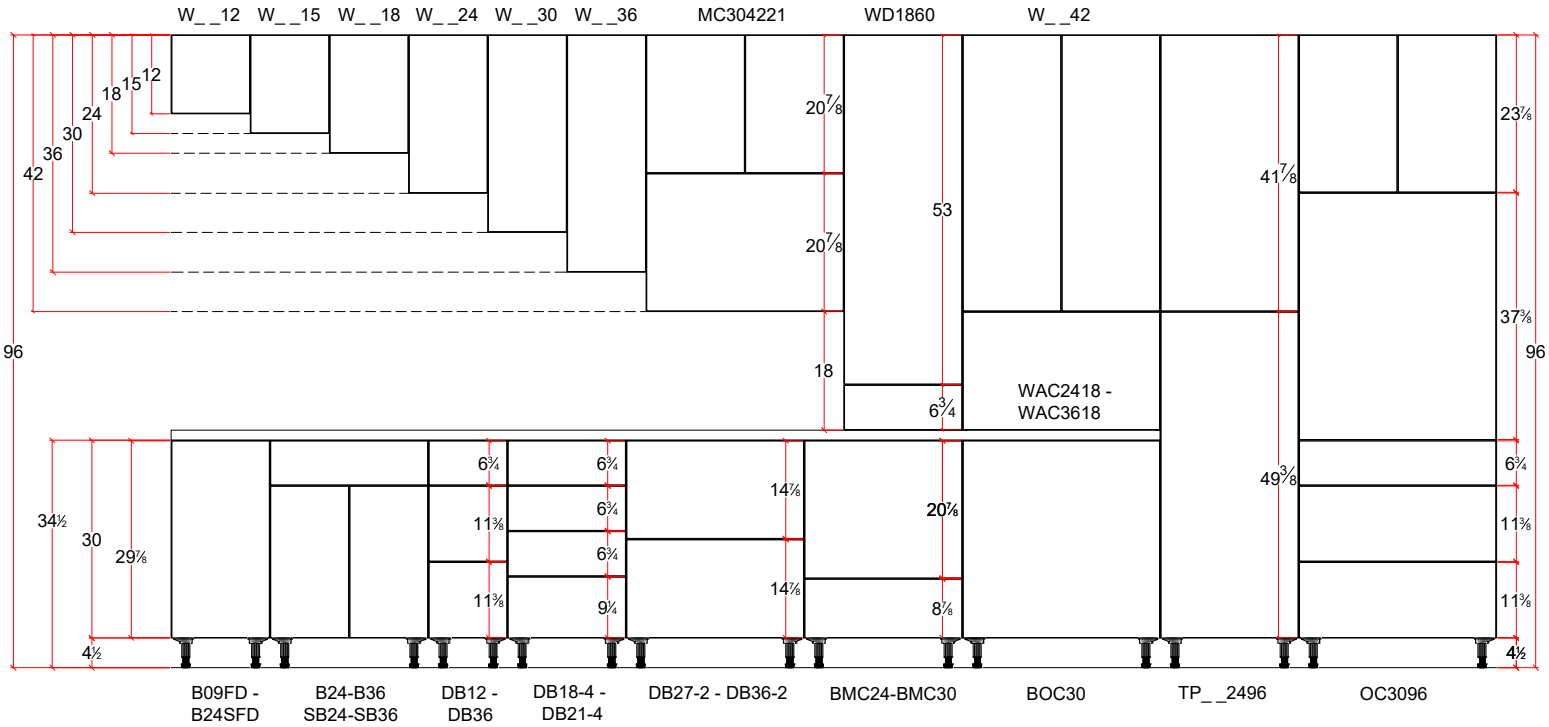

Notes

Copyright © 2026 by Fabuwood Cabinetry Corp.

All rights reserved.

No part of this publication may be reproduced, distributed, or transmitted in any form or by any means, including photocopying, scanning, or other electronic or mechanical methods, including online sharing, without the prior written permission of Fabuwood Cabinetry Corp.

fabuwood®

69 Blanchard Street | Newark, NJ 07105 | **T**: (201) 432-6555 | **F:** (201) 432-6055 | www.fabuwood.com