Spraymec 8100 VC Stage V

Normet reserves the right to change this specification without further notice

Pictures may include options and additional equipment.

Normet Oy
Ahmolantie 6
FI-74510 IISALMI, FINLAND

www.normet.com

Tel +358 (0) 17 83 241
info@normet.com

INTRODUCTION

ROBUST CONCRETE SPRAYING MACHINE FOR MEDIUM TO LARGE-SIZED TUNNEL PROFILES

Spraymec 8100 VC is a self-propelled, mobile concrete sprayer for tunneling projects with medium to large-sized tunnel profiles.

The robust carrier vehicle with 4-wheel drive and crab steering provides easy repositioning of the machine in confined spaces and on poor ground.

UNMATCHED DOSING SYSTEM AND CONCRETE SPRAYING PUMP TECHNOLOGY

The integrated closed-loop control system continuously monitors and adjusts the dosage of the liquid set accelerator and the concrete pump output.

Alternatively to the standard progressive cavity pump, a low-pulsation peristaltic dosing pump and an additional display in the driver's cabin are available.

A unique hydraulic system that independently controls the conveying cylinders is selectable to reduce further the pulsation in the concrete delivery to an absolute minimum.

SPRAYING BOOM

The proven spray manipulator with spray lance is easy to operate and has an impressive working range.

The good protection against rebound and a high degree of freedom of the manipulator result in a highly effective set-up of a concrete sprayer.

HIGH VOLUME COMPRESSOR AND CONCRETE DELIVERY SYSTEM

A reliable and high-volume onboard compressor delivers the air volumes required for a high-quality sprayed concrete application.

The conveying and nozzle system with big diameter steel pipes and hoses minimizes the risk of blockages. An optionally available automatic washing system for the nozzle and conveying line reduces personnel to clean the machine.

RELIABLE CONTROL SYSTEM AND ELECTRICS

The spray manipulator is controlled by cable or radio remote control.

All exposed control components are IP65 rated, and the industrial-grade CAN bus system allows effortless troubleshooting.

The well-dimensioned lights on the carrier vehicle and the spray boom provide a good view both while driving and during the spraying operation.

FOCUS ON EASY MAINTENANCE

Easy access to maintenance elements and the central location of lubrication points for the carrier vehicle reduces daily maintenance work. This ensures that no lubrication point is overlooked, thus avoiding costly repairs.

Normet Oy
Ahmolantie 6
FI-74510 IISALMI, FINLAND

www.normet.com

Tel +358 (0) 17 83 241
info@normet.com

TECHNICAL SPECIFICATION

SPRAY BOOM

- SPRAY BOOM SB 508 H

  Vertical and horizontal tracking of the upper boom telescope to keep the spraying distance constant.

  Automatic movement of the upper boom telescope (back and forward) to facilitate the spraying process.

  Nozzle nutation for better distribution of the spray material and surface quality

  Heavy-duty and wear-resistant rebound protection for the upper boom telescope.

  The maximum speed of the boom movements can be adjusted via the display in the operator's cab.

  All hydraulic movements are proportionally cont-rolled and pressure compensated.

  Boom working range:

Lateral	16.0 m
Vertical max.	14.0 m
Vertical with upper boom horizontal	10.3 m
Nozzle head rotation	420°
Nozzle tilting	105°

- SPRAY BOOM SMARTSPRAY SB 508 C

  The travelling speed of the nozzle (sum of all joints) can be adjusted from the remote control.

  The boom working range is identical to that of the standard spray boom.

  All standard remote controls are supported (compatibility with localized remote controls must be checked).

  - SmartSpray Lite

    Enhanced control system for coordinated boom move-ments instead of controlling the individual joints.

  - SmartSpray ProPlus

    Functional extension of the SmartSpray Lite control sys-tem enables automated movements of the spray nozzle. If the machine is not positioned parallel to the spraying surface, the upper boom extension's travel axis can be realigned to facilitate the operation.

    Online adjustment of the traveling path or segment.

    Extra remote control for SmartSpray Pro features.

CONCRETE PUMP AND DOSING SYSTEM

CONCRETE PUMP NSP 40

Low-wear and low-maintenance double piston pump specially designed for low-pulsation concrete pumping.

Reversing function for concrete pressure relief in case of over-pressure and automatic switching off of the nozzle air supply

Pump capacity	3 - 30 m^3 / h
Pumping cylinder diameter and stroke	200/920 mm
Pumping pressure, max.	51 bar
Feeding hopper 300 l at height	1190 mm

The high pumping pressure enables the conveying of stiff con-crete.

PI control loop for constant concrete delivery even when the rheology of the concrete is changing.

The pump is capable of conveying concrete with an aggregate size of up to 16 mm (including crushed material) and all types of structural fibers up to a length of 60 mm.

Hydraulically driven agitator in hopper.

Advanced control system (hydraulic and electrical) ensures low-pulsation concrete flow.

- Nordoser XIM, Electrical control system for the concrete pump with low pulsation pumping feature and screw pump
- Nordoser XIP, Electrical control system for the concrete pump with low pulsation pumping feature and peristaltic pump

Vibrator with electric drive:

- 3 x 400 VAC
- 24 VDC

The performance of the pump, including the maximum pumping capacity, are based on a theoretical filling rate of 100%.

DOSING SYSTEM FOR ACCELERATOR NORDOSER

Hydraulically driven dosing pump with electric control

Max. pumping pressure	12 bar
Dosing rate	0.6...16 l/min
	(36 - 960 l/h)

Accelerator dosing is fully synchronized with concrete delivery. The concrete delivery line and the dosing rate are adjustable from the remote control.

In addition to the standard 1000 l container for liquid set accel-erators (IBC), a second container with the same volume can be installed.

Normet Oy
Ahmolantie 6
FI-74510 IISALMI, FINLAND

www.normet.com

Tel +358 (0) 17 83 241
info@normet.com

COMPRESSOR

Electrically operated screw compressor

Free Air Delivery	12 m^3/min
Rated operating pressure	7 bar
Electric motor	75 kW

Soft start system for compressor (standard up to 600 V)

Air flow to nozzle adjustable in three steps (8 m^3, 10 m^3 and max.flow)

ELECTRICAL SYSTEM

Mains supply voltage:
- 50 Hz
  - 400 V (IEC)
  - 415 V (IEC)
  - 525 V (IEC)
  - 690 V (IEC)
  - 1000 V (IEC)
  - 1000 V (AS/NZS)
- 60 Hz
  - 440 V (UL/CSA)
  - 440 V (IEC)
  - 480 V, (460 V) (UL/CSA)
  - 600 V, (575 V) (UL/CSA)
  - 1000 V, (UL/CSA)

Robust and abrasion-resistant mains voltage supply cable with PUR outer sheath:
- With supply cable (excluding plug)
- Without supply cable
  (must be sourced and installed locally)

Hydraulically driven cable reel:
- Slipring with pilot contact
- Slipring without pilot contact

Hydraulic power pack	55 kW

Cable reel capacity:

Cable size	Outer diameter	Max. length reel	Voltage
3x35+3G6+2x1x1.5	28,0	150 m	1000 V
3x50+3G10+2x1x1.5	32,0	130 m	690 V
3x70+3G16+2x1x1.5	37,0	100 m	600 V
3x95+3G16+2x1x1.5	42,0	100 m	400 - 440 V

Socket supply voltage:
- 220 / 230 / 240 V (no UL/CSA or AS/NZS approval)
- 110 / 120 V

Since not all socket types, voltage levels, pilot wire and high voltage lighting are available in every country, they must be checked on a case-by-case basis.

ENGINE AND TRANSMISSION

Deutz TCD 3.6 L4, 80 kW/2300 rpm, Stage V approved

Requires diesel exhaust fluid (DEF) and Ultra-low sulphur diesel (ULSD)

Fuel tank capacity	85 l
DEF tank capacity	10 l

Hydrostatic 4-wheel transmission

PERFORMANCE

Max. tractive force	58 kN
Tramming speed (horizontal)	15 km/h
Lateral gradient for tramming (continuous)	4°
Longitudinal gradient for tramming (continuous)	9°
Lateral gradient for operation	4°

Depending of machine configuration, lateral and longitudinal tramming gradient can temporarily be higher.

CONTROL SYSTEM

Latest NorSmart 3 control and diagnostic system with separate process display on the front of the machine to control:

Spray boom
Concrete pump
Accelerator dosing system
Carrier functions
Safety elements
Fault diagnostics
Data logging

AXLES AND BRAKES

Planetary type axles Dana 212
Fixed axle at the front of the carrier
Oscillating axle +/-10° at the rear end of the carrier with automatic locking when the parking brake is activated

Service brake: hydraulically powered dual-circuit oil immersed multidisc brakes in both axles

Safety/Parking brake: spring applied hydraulically released fail-safe -type brake

Brake testing possible from cabin

TYRES AND RIMS

Nokian Tyres 10.00-20"

Normet Oy
Ahmolantie 6
FI-74510 IISALMI, FINLAND

www.normet.com

Tel +358 (0) 17 83 241
info@normet.com

STEERING

Two- and four-wheel steering and crabwalk.
Steering wheel and orbitrol type power steering control unit.

HYDRAULIC SYSTEM

Diesel powered hydraulic pump

Variable displacement pump for carrier and spray boom

Electric power pack 55 kW, 50/60 Hz with hydraulic pumps

Variable displacement pump for spray boom

Variable displacement pump for concrete pump

Variable displacement pump for S-tube

Fixed displacement gear pump for agitator and dosing system

Oil tank capacity, stainless steel	200 l
Return oil filtration	10 µm

Oil level and return filter contamination indicator
Oil cooler for concrete and spray boom circuit

Hydraulic oil type for process:
- Mineral hydraulic oil
- Biodegradable hydraulic oil (ISO 15'380/HEES)

Carrier hydraulic system (hydrostatic):

Pump	78 cm^3
Motor	110 cm^3
Oil tank capacity, stainless steel	90 l
Return oil filtration	10 µm

Oil level and return filter contamination indication

Hydraulic oil type for carrier (hydrostatic drive system):
- Mineral hydraulic oil
- Biodegradable hydraulic oil (ISO 15'380/HEES)

REMOTE CONTROL SYSTEM

Wireless remote control (frequency ranges must be checked against local regulations)
- Radio remote control with 2 joysticks including additional cable for bridging the radio link and power supply
  - 419 MHz
  - 429 MHz
  - 434 MHz
  - 458 MHz and tilt switch 22.5°
- Radio remote control with 4 joysticks including additional cable for bridging the radio link and power supply
  - 429 MHz
  - 434 MHz
  - 458 MHz and tilt switch 22.5°

The following machine components can be controlled by radio remote control:

Accelerator dosing rate
Accelerator pump ON/OFF
Concrete pump output
Concrete pump ON/OFF/REVERSE
Compressed air supply to spray nozzle ON/OFF
Nozzle quick wash ON/OFF
Wall washing ON/OFF
Horizontal tracking of the upper boom telescope ON/OFF
Automatic second telescope IN/OUT and ON/OFF
Nozzle nutation ON/OFF

MACHINE WASHING

Water circuit with online strainer of 180 µm.

Hydraulically driven pressure washer with hose reel:

Water pressure, max.	180 bar
Water flow, max.	30 l/min
Hose length	20 m

WATER HOSE REEL

- Manually operated reel

  Hose ID 1”, length on the reel 40 m, effective length about 35 m*
- Hydraulically operated reel
  - Hose ID 1”, length on the reel 40 m, effective length about 35 m*
  - Hose ID 1", length on the reel 60 m, effective length about 55 m*
  - Hose ID 1”, length on the reel 80 m, effective length about 75 m*

*The effective length vary depending on machine model

Normet Oy
Ahmolantie 6
FI-74510 IISALMI, FINLAND

www.normet.com

Tel +358 (0) 17 83 241
info@normet.com

24 VDC ELECTRICAL SYSTEM

LED driving and indicator lights

LED work lights on boom (8 pcs)

LED work lights on cabin (2 pcs)

Warning LED light:

Color
- Amber
  - Blue
  - Red
  - Green (n/a with rotating light pattern)
  - White (n/a with rotating light pattern)

Light pattern
- Strobe
  - Rotating

DRIVER'S COMPARTMENT

Open cabin with FOPS/ROPS approval

Cabin door interlock switch with safety brake application

Suspended driver's seat
- 3" retractable lap seat belt with safety switch
  - Fixed lap seat belt

MACHINE CONNECTIVITY

- Machine connectivity hardware (WLAN/3G/4G/LTE)
  - Data lifetime license (Include connectivity hardware)
  - Analytics lifetime license
    (Include connectivity hardware and data lifetime license)

TECHNICAL DOCUMENTATION

Standard documents:

Instruction manuals, hard copy 2 pcs:
- English
  - Russian
  - One of destination EU languages

Spare parts manuals, hard copy 2 pcs:
- English
  - Russian

PDF manuals on USB-stick 2 pcs, includes instruction and spare parts manuals

Additional documentation:
  - Extra hard copies of manuals
  - Extra PDF manuals
  - LinkOne WebView electronic manuals
  - Other than standard language manuals

OTHER

Powder extinguisher:
- 12 kg
  - Ansul Sentry

Number of extinguishers:
- 1
  - 2

Front support legs, extendable

Front and rear grounding straps:
- Flat cable
  - Chain

Painting and taping:
- Standard painting and taping
  - Painting and taping according to customer specifications

Text labels in:
- En/Ru/One of destination EU languages
  - Other language

Measurements:
  - Noise
  - Vibration
  - Emissions

Standard tool set:

Cleaning plug
Washing ball
Hitting tool for nozzle
Claw coupling
Hose clamp
Rubber hose 3/4", 4 m
Carabiner
Wrench for spraying nozzles
Hammer 800 g
Nozzle tip d45 mm plastic
Cone and special bolt for concrete piston assembly

Normet Oy
Ahmolantie 6
FI-74510 IISALMI, FINLAND

www.normet.com

Tel +358 (0) 17 83 241
info@normet.com

ACCESSORIES

PROCESS PRODUCTIVITY

- Concrete thickness measurement system
  - Normet SmartScan
  - Normet SmartScan Align for georeferenced profile data
- Spraying condition monitoring system (ambient, concrete, accelerator temperature and air pressure)
- High volume concrete pumping for casting
  Increase of concrete pumping capacity to 40 m^3/h together with reduction of max. pumping pressure
  Hose set included dia. 125 mm (5"), 18.5 m
- Hot climate kit (extra water/oil-heat exchanger for internal oil system of compressor, required for ambient temperatures above 30 °C)
- Hydraulic circuit to empty the concrete pump with the diesel engine
- Automatic lubrication system for concrete pump
- Automatic lubrication system for carrier and spray boom (n/a for nozzle head)
- Plug with air and water connection for flushing/cleaning of the 125 mm (5") concrete line
- Automatic concrete line washing system including protective cover on hopper
- Container for liquid accelerator (IBC) 1000 l
  - One container
  - Two containers
- Collecting pan under the accelerator tank:
  - 1
  - 2
- Accelerator filling system:
  - Accelerator filling point
    - For one container
    - For two containers
  - Accelerator filling pump
    Hydraulic driven filling pump 80 - 110 l/min, impeller type
    - For one container
    - For two containers
- Heating element kit for accelerator container (IBC):
  Easily exchangeable jacket-type heating element,
  2 circuits each 1000 W,
  -5°C to 40°C capillary thermostat per circuit
  Includes separate insulator cover part for container
  (hole for the filling gap and mixer)
  - For one container
  - For two containers
- Electrically operated mixer for accelerator container (IBC):
  - For one container
  - For two containers

  NOTE: power supply is required for heating and mixing kits if used during operation
- Additional separator in suction line of accelerator
- Power supply for heating and mixing kits

  NOTE: Allows heating and mixing kits to be used during operation 6,3 kVA transformer reserved for 6 sockets
- Soft start system for compressor with supply voltage 690 V
- Bypass filter kit for oil circuit
  - Without motor pump
  - With motor pump
- Hydraulic oil diagnostic sensor
- Form oil system 24 VDC with hose reel:
  Tank capacity 30 l
  Hose length 20 m
  Working pressure 10 bar
- Wireless remote control with 2 joysticks including additional cable for bridging the radio link and power supply
  (select the desired type and amount of remote controls)
  - 419 MHz
  - 429 MHz
  - 434 MHz
  - 458 MHz and tilt switch 22.5°

  Number of wireless remote controls:
  - 1
  - 2
- Wireless remote control with 4 joysticks including additional cable for bridging the radio link and power supply
  (select the desired type and amount of remote controls)
  - 429 MHz
  - 434 MHz
  - 458 MHz and tilt switch 22.5°

  Number of wireless remote controls:
  - 1
  - 2
- 2 x 100 W LED working lights on cabin roof
  (no UL or AS/NZS approval)
- Surface preparation
  High-pressure water system for cleaning and pre-wetting of the spray area with water nozzle installed on the spray head:
  - 180 bar, 90 l/min, hydraulic motor drive for water pump (Speck), nozzle holder with 3 nozzles
  - 460 bar, 50 l/min, piston to piston type hydraulic water pump (Dynaset), nozzle holder with 1 nozzle
- Water tank, 400 l, stainless steel
  NOTE: only one 1000 l accelerator container can be installed when this option is selected
- Large storage box for tools and spare parts
  NOTE: only one 1000 l accelerator container can be installed when this option is selected

CARRIER PRODUCTIVITY

- Auto engine shutdown during idling
- Engine shutdown delay
- Inlet plug for jump start
- Reversing camera (1 camera, 1 display)
- Spare rim and tyre
- Toolbox and maintenance tools
- Wax tape for electric connectors

Normet Oy
Ahmolantie 6
FI-74510 IISALMI, FINLAND

www.normet.com

Tel +358 (0) 17 83 241
info@normet.com

SAFETY

- Extra warning LED light
  (From the options below it is possible to choose 1-2 combinations)

  Color
  - Amber
  - Blue
  - Red
  - Green (n/a with rotating light pattern)
  - White (n/a with rotating light pattern)

  Light pattern
  - Strobe
  - Rotating
- Seat belt interlock switch applies safety brake
- Fire extinguisher system
  - Dry chemical
    - Ansul A-101
      - Manual
      - Automatic, Checkfire 110
  - Liquid agent
    - Fogmaker (Automatic)
- Electric pump for brake release
- Window and door kit for cabin
- Hearing protectors
- Wheel chocks with brackets

SERVICES

NORMET SERVICES

Our services cover the whole life cycle of your equipment. They include start-up and commissioning, genuine spare parts, upgrades & modifications, and remanufacturing, as well as rental and leasing offerings, and field services. We also offer improvement services such as operator training and process audits.

SPARE PARTS

Genuine parts from Normet Services ensure that you always have the highest quality parts available to keep your equipment up and running. Depending on your needs, we can offer everything from individual parts to complete parts contracts, and our professionals around the world have the experience to ensure that you have the parts you need when you need them.

Initial spare parts package:

Available for 1000h of use*. Includes periodical service, most common wearing parts and most critical safety parts.

Spare parts packages made for customer needs:

Available based on hours of use*. Includes periodical service, most common wearing parts and most critical safety parts.

* Recommendations are based on average hours – can vary a lot depending on work site conditions.

UPGRADES AND MODIFICATIONS

Our Upgrades and Modifications services are designed to ensure the economical, efficient and purposeful performance of your equipment over its entire life cycle. A service provided by a reliable OEM like Normet ensures the safety and performance of your equipment. Normet Upgrades and Modifications save you both time and money, while delivering the high quality you expect from us.

SERVICE CONTRACTS

With a service agreement, Normet manages your fleet with guaranteed availability and agreed costs, giving you transparency for your life cycle costs, annual operational budget and fleet uptime. This lets you focus on your core operations. Each service agreement is built and customized to meet the individual customer's needs from our portfolio of services. Depending on the level of service agreement you need, you can choose anything from basic technical support for an individual machine all the way up to services for your entire fleet, as well as process performance. The service levels we offer are:

- Parts Availability
- Fleet Support
- Fleet Availability
- Process Performance

The content of a service level can be tailored to meet your particular requirements.

TRAINING SERVICE

Our Training Services are available for you and your operators throughout the equipment lifecycle and they include:

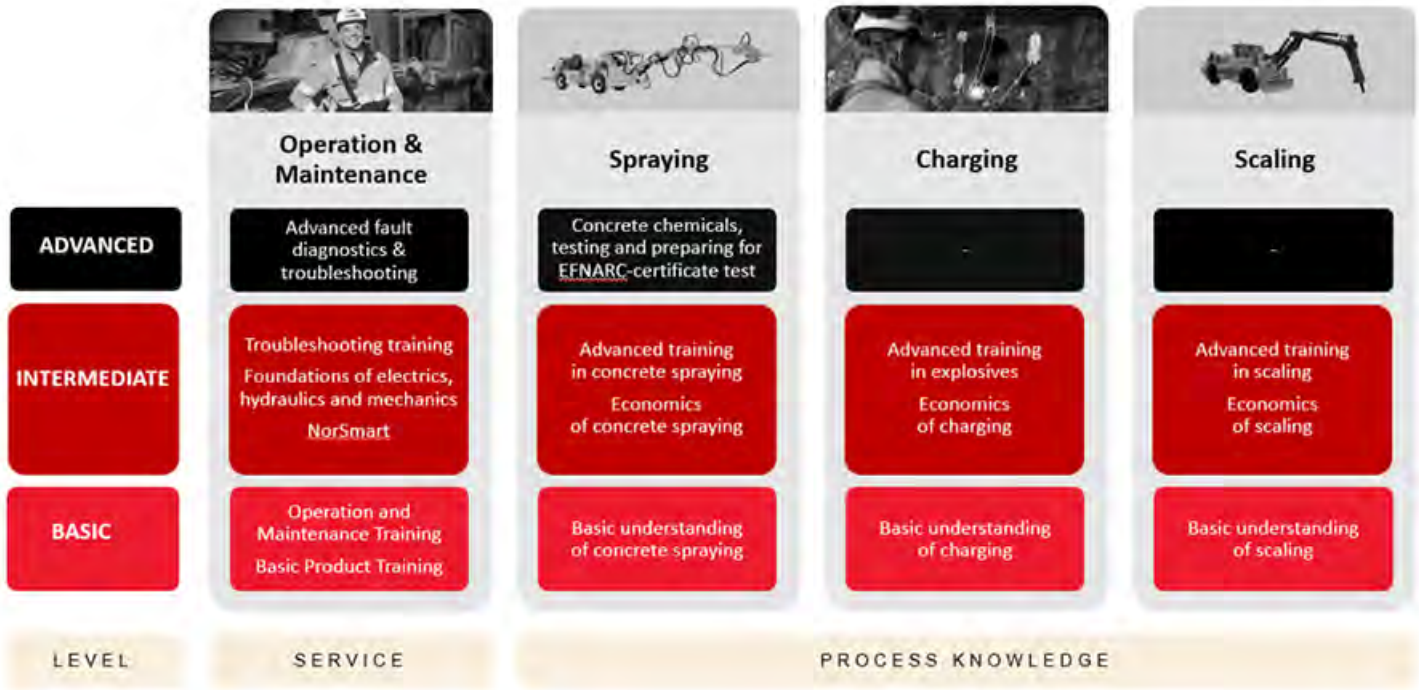

Normet reserves the right to change this specification without further notice

Pictures may include options and additional equipment.

Normet Oy
Ahmolantie 6
FI-74510 IISALMI, FINLAND

www.normet.com

Tel +358 (0) 17 83 241
info@normet.com

START-UP AND COMMISSIONING

1. OPERATOR TRAINING

	Start-up training	Commissioning
1.1 Classroom training		
General introduction and operation of machine	Basic	No classroom training included in commissioning
Safety instructions	Basic	
Use of manuals	Basic	
Technical introduction of equipment	Basic	
Hands-on service and pre-operation checks	Basic	
Controls and driving (starting, driving, stopping, parking)	Basic	
1.2 Practical training		
Pre-operation checks	Basic	Introduction
Driving, starting, stopping, parking	Basic	Introduction
Preparing the machine for specific operation conditions	Basic	Not covered
Operation	Basic	Introduction
Washing the machine	Basic	Introduction
Troubleshooting	Basic	Basic

2. MAINTENANCE AND REPAIR TRAINING

General operation of machines	Basic	Introduction
Symbols of drawings and codes	Basic	Not covered
Understanding hydraulic and electric schematics	Basic	Introduction
Control systems	Basic	Introduction
Function of main components (depending on equipment)	Basic	Introduction
Locations of components in the machine	Basic	Not covered
Periodical maintenance	Basic	Introduction
Troubleshooting	Basic	Not covered
Use of manuals	Basic	Introduction
Connection of hydraulic and electrical equipment	Basic	Not covered

Normet Oy
Ahmolantie 6
FI-74510 IISALMI, FINLAND

www.normet.com

Tel +358 (0) 17 83 241
info@normet.com

DIMENSIONS

Length	13050 mm	Ground clearance as shown	370 mm
Width	2500 mm	Turning radius outer	6750 mm
Height	2840 mm	Turning radius inner	1850 mm
Wheel base	3800 mm		

SIDE VIEW 1

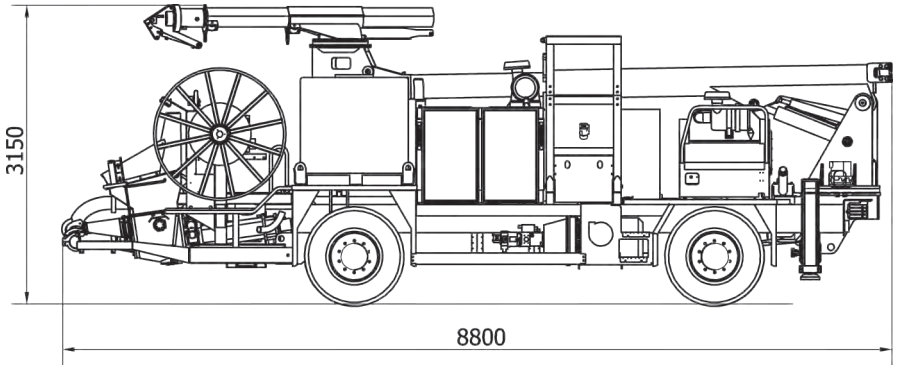

Basic machine. Transportation and driving dimensions, boom turned on the vehicle. Vehicle width 2500 mm

TURNING RADIUS

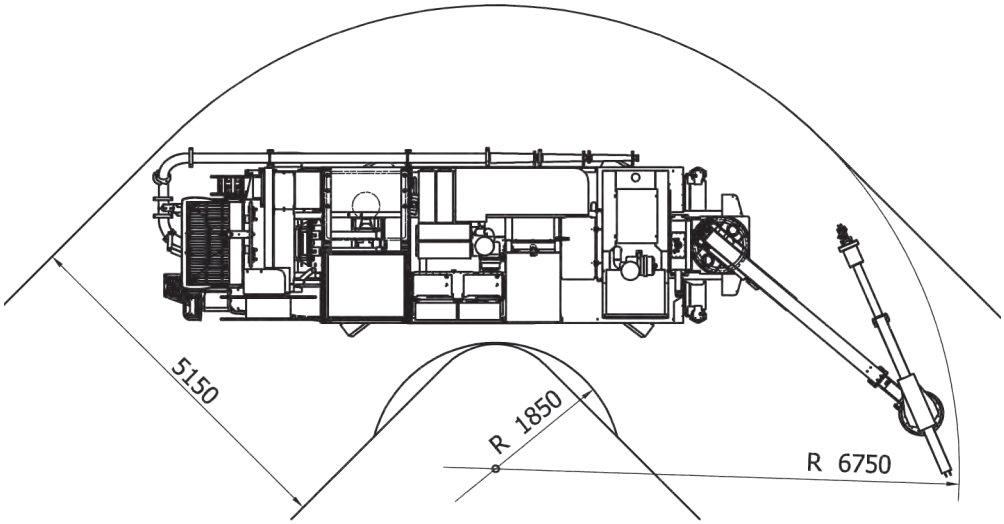

Normet reserves the right to change
this specification without further notice

Pictures may include options and additional equipment.

Normet Oy
Ahmolantie 6
FI-74510 IISALMI, FINLAND

www.normet.com

Tel +358 (0) 17 83 241
info@normet.com

SIDE AND OVERVIEW 2

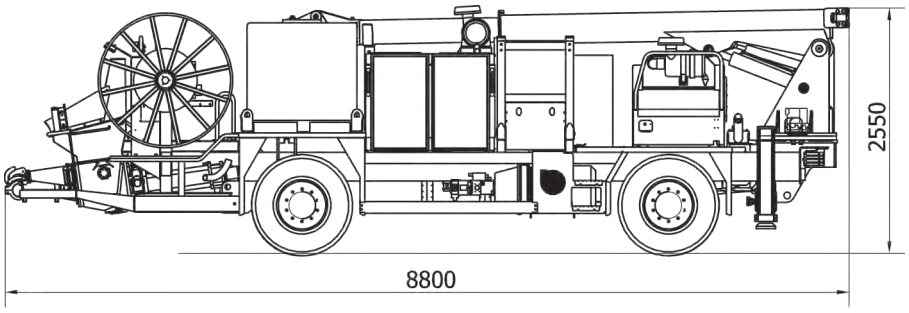

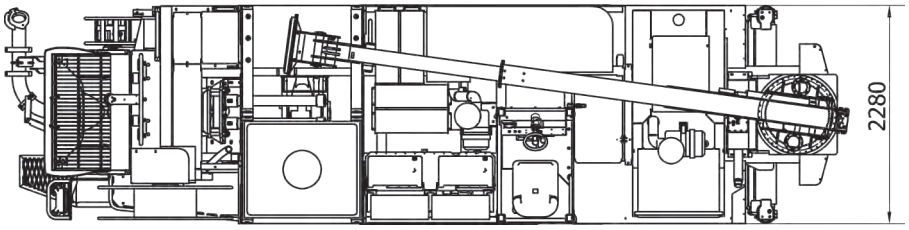

Basic machine. Transportation dimensions for container transport. Upper part of the cabin, concrete line, ladders and upper part of the boom must be removed

SIDE VIEW 3

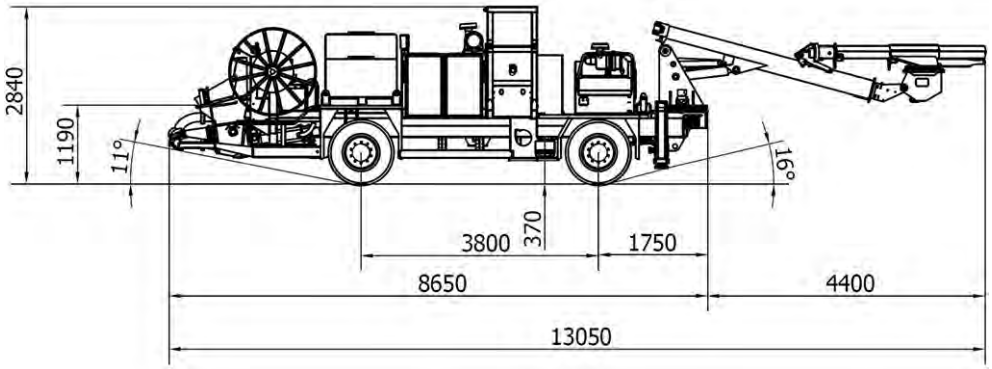

Basic machine. Driving dimensions at job site

OVERVIEW 3

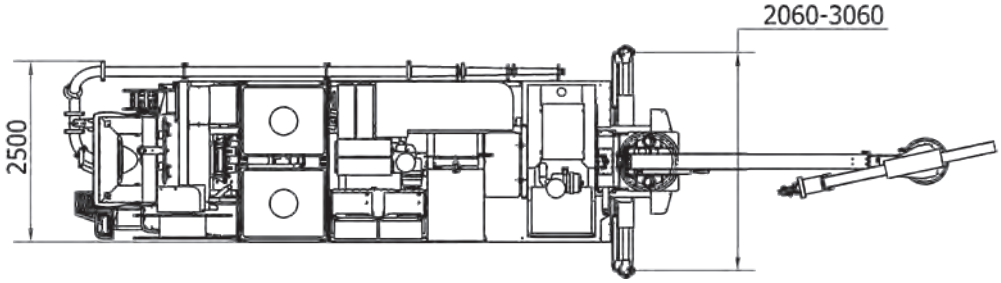

Basic machine. Driving dimensions at job site

Normet reserves the right to change
this specification without further notice

Pictures may include options and additional equipment.

Normet Oy
Ahmolantie 6
FI-74510 IISALMI, FINLAND

www.normet.com

Tel +358 (0) 17 83 241
info@normet.com

TOP AND BACK VIEW

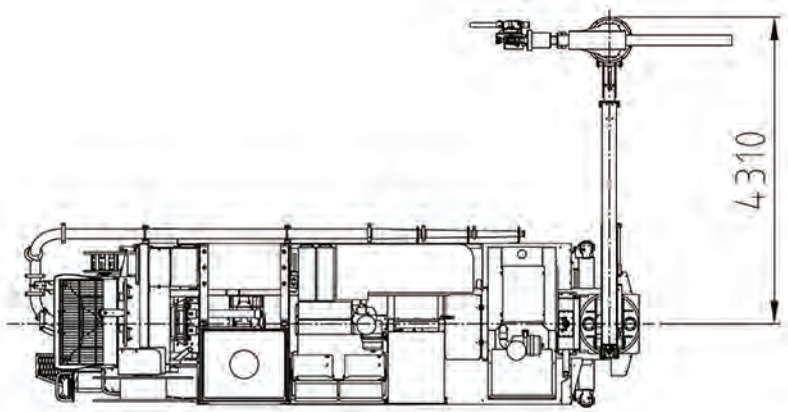

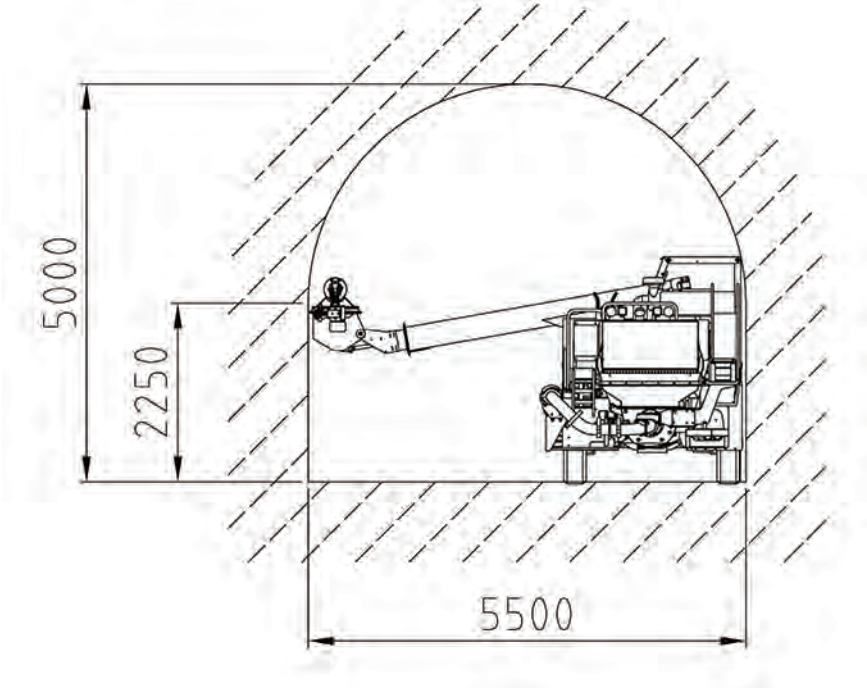

Basic machine. Required space to unfold boom from transport position to working position.

Normet Oy
Ahmolantie 6
FI-74510 IISALMI, FINLAND

www.normet.com

Tel +358 (0) 17 83 241
info@normet.com

SIDE COVERAGE AREA OF SPRAY BOOM SB 508

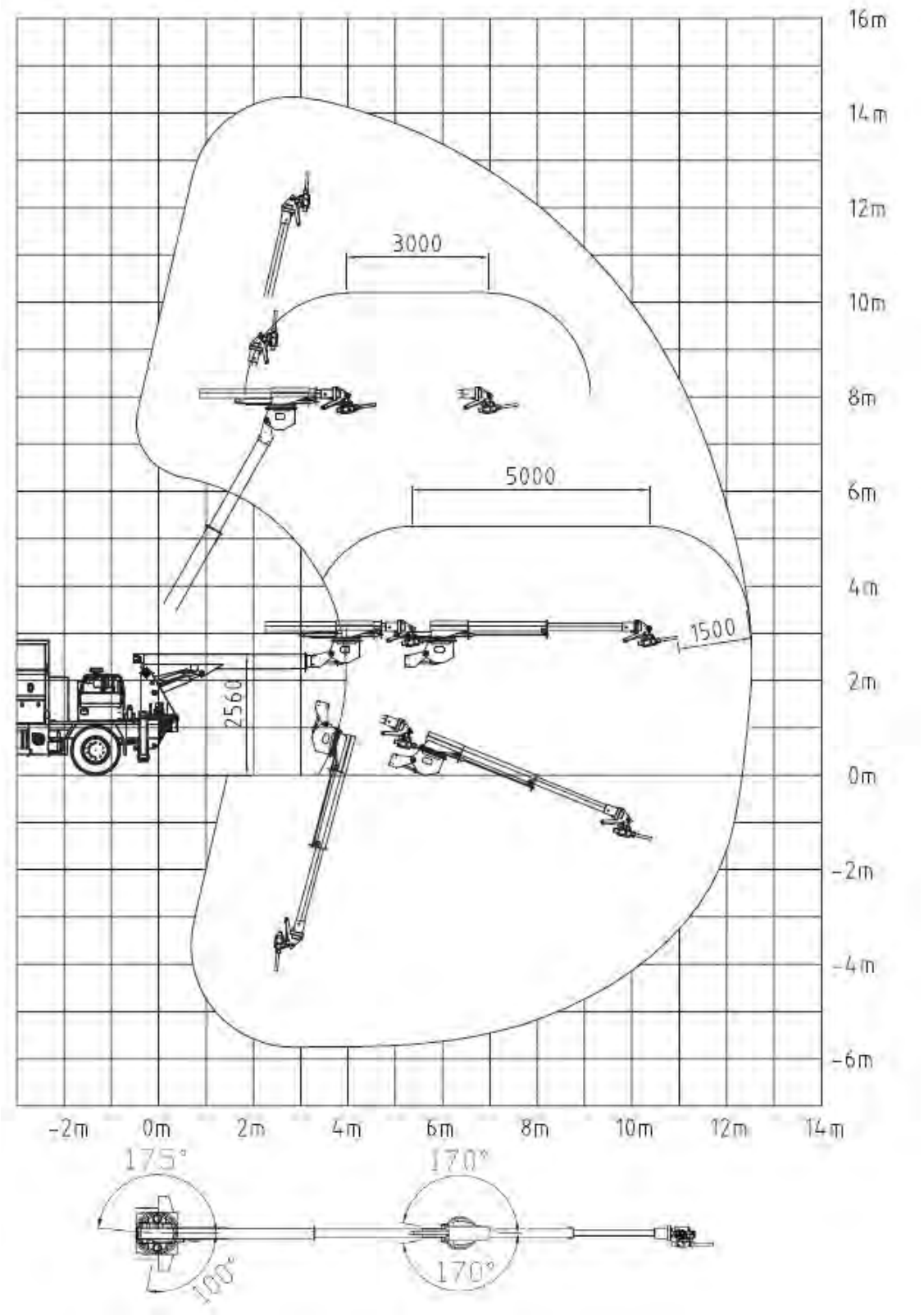

Normet reserves the right to change
this specification without further notice

Pictures may include options and additional equipment.

Normet Oy
Ahmolantie 6
FI-74510 IISALMI, FINLAND

www.normet.com

Tel +358 (0) 17 83 241
info@normet.com

TOP COVERAGE AREA OF SPRAY BOOM SB 508

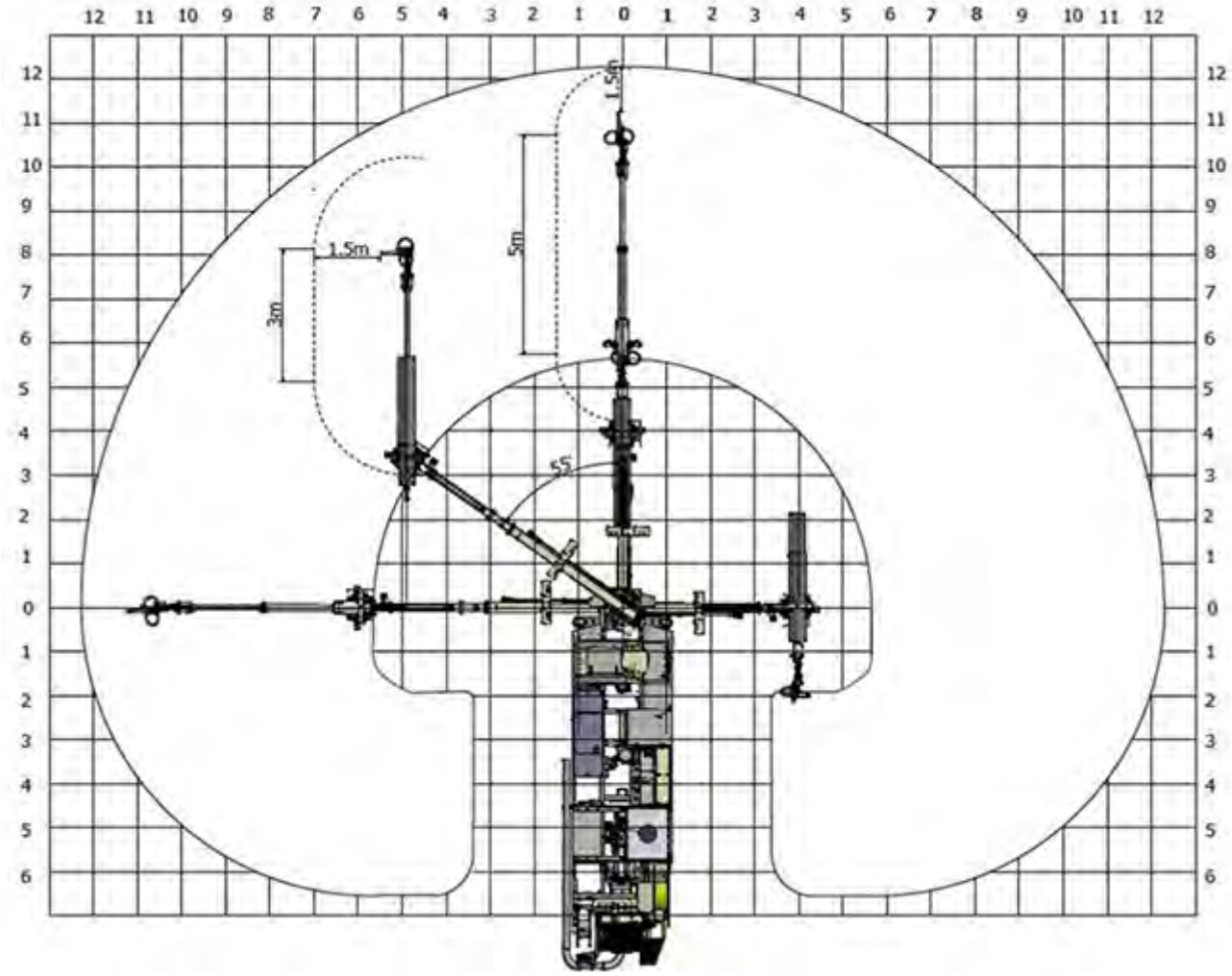

COVERAGE AREA OF SPRAY BOOM SB 508

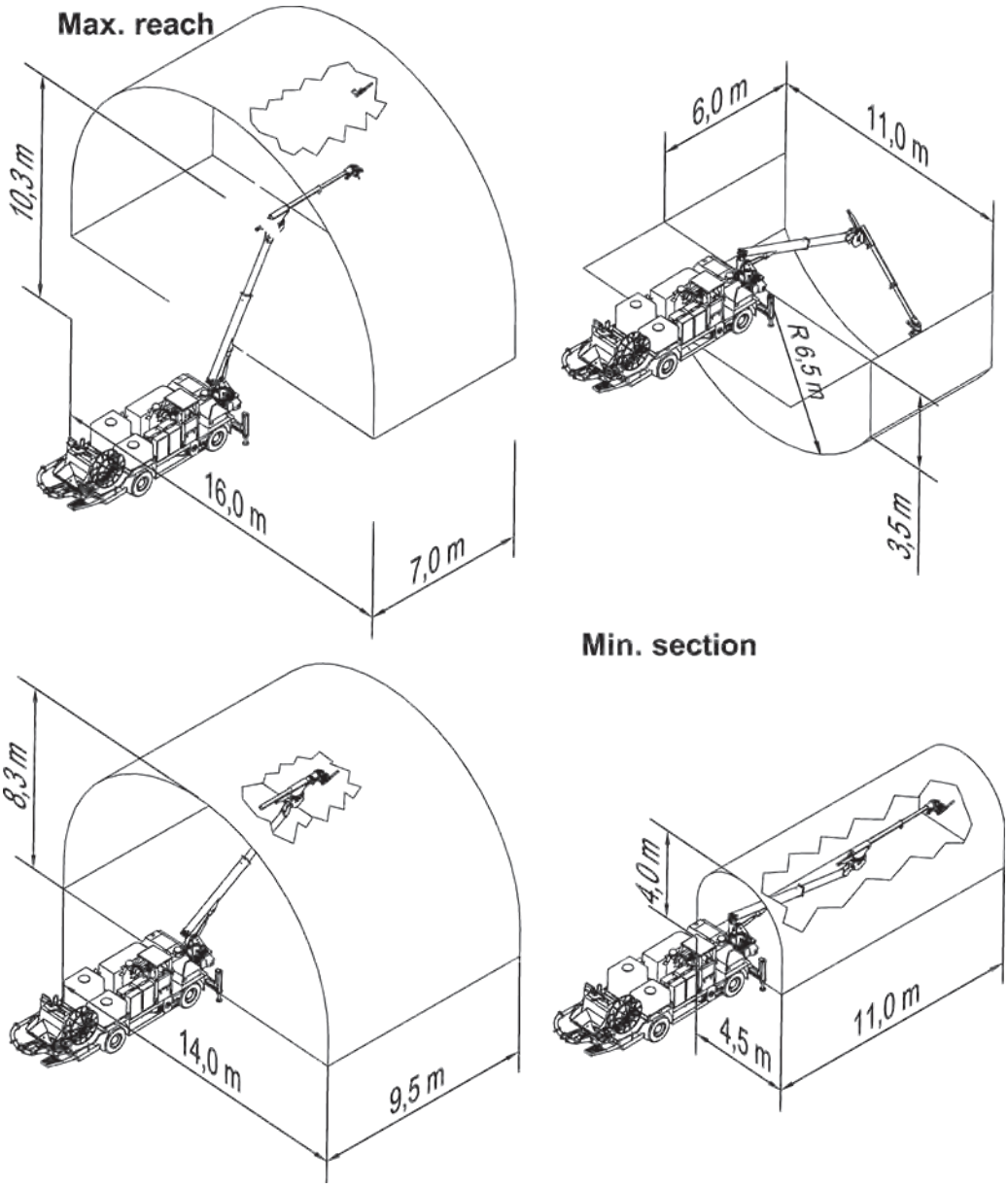

Normet reserves the right to change
this specification without further notice

Pictures may include options and additional equipment.

Normet Oy
Ahmolantie 6
FI-74510 IISALMI, FINLAND

www.normet.com

Tel +358 (0) 17 83 241
info@normet.com

TRACTIVE EFFORT

DEUTZ TCD 3.6 L4 80 KW

DOC059937

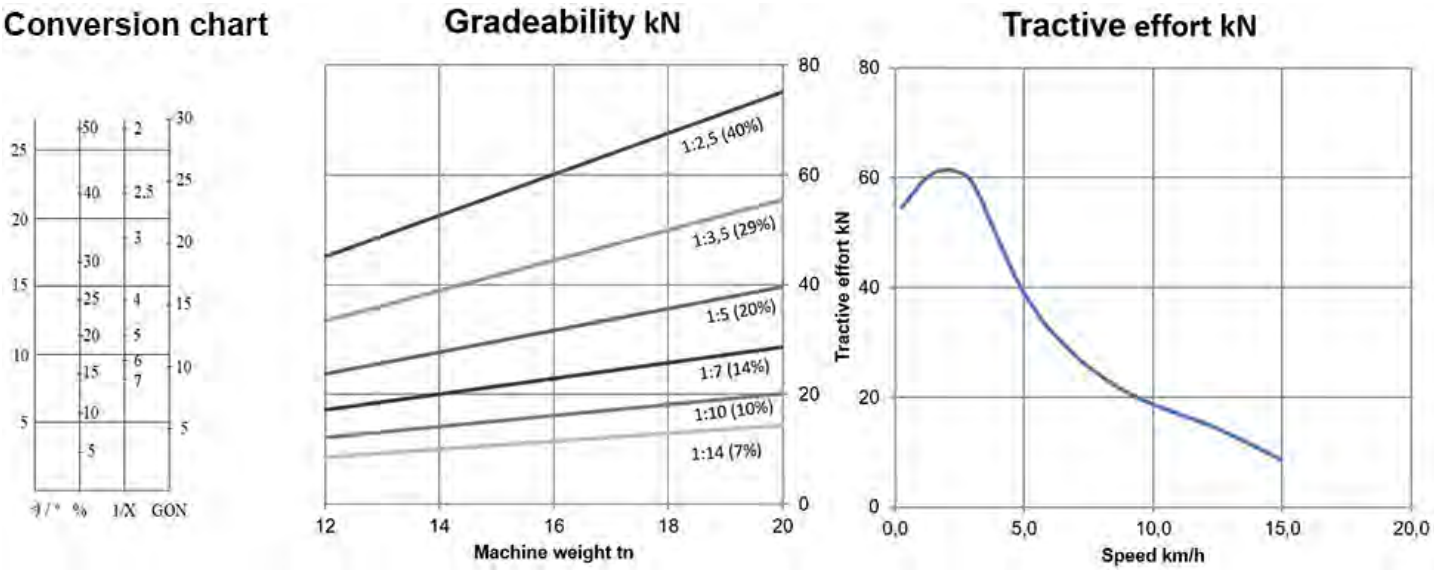

OPERATING WEIGHT

Base machine	16 100 kg

final machine weight variate in agree with selected options

Normet reserves the right to change
this specification without further notice

Pictures may include options and additional equipment.

Normet Oy
Ahmolantie 6
FI-74510 IISALMI, FINLAND

www.normet.com

Tel +358 (0) 17 83 241
info@normet.com