Payor's PAD Agreement

INSTRUCTIONS

1. The Payee must retain this agreement for at least 12 months after the last Pre-Authorized Debit (PAD) is issued.
2. The Payee can obtain the Transaction Type Code from the Payments Canada website. See CPA Standard 007, Standards for the Use of Transaction Codes and Return Reason Codes in AFT Files.
3. The Payee will insert the number of days required to cancel a payment in the "Cancel Payment" Section (cannot exceed 30 days).

PAYEE INFORMATION *(Mandatory)*

Payee Name (the "Payee") Tot Spot Preschool	**Phone** 403-271-8894
Address ***(street, city, province, postal code)*** 1507 Acadia Drive S.E., Calgary, AB, T2J 5C4	**Email** info@totspotpreschool.ca

PAYOR INFORMATION *(Mandatory)*

Account Holder Name(s) (the "Payor") ***(last name or business name, first name)***	**Phone**
Address ***(street, city, province, postal code)***	**Email**

PAYMENT DETAILS ☐ Account form OR cheque marked "VOID" ATTACHED. (SEE REVERSE / PAGE TWO FOR INSTRUCTIONS)

Payor Account ***(the Payor's account at the Processing Institution; the "Account")*** ***Branch ID*** | ***Institution No.*** 0 | ***Account No.***		**Payor Financial Institution Name and Address** ***(the "Processing Institution")***
Due Date(s) Sept.1, 2025	● **Fixed, Monthly Amount** $ _____ O **Variable** ***(maximum amount)*** $ _____	_____ _____ _____

A

AUTHORIZATION *(If only 1 signature is required for the Account, then only 1 Payor need sign. If 2 or more signatures are required, then both or all Payors must sign.)*

I/We acknowledge that this agreement is provided for the benefit of the "Payee" and "Processing Institution" and is provided in consideration of the Processing Institution agreeing to process debits ("PADs") against the Account with the Processing Institution in accordance with the Rules of the Canadian Payments Association (the "CPA Rules").

By signing this agreement, the Payor acknowledges having received and having read a copy of this agreement, including the terms and conditions on page 2, acknowledges understanding the terms and conditions of this agreement, and agrees to be bound by the terms and conditions of this agreement, including the terms and conditions on page 2.

I/We warrant and guarantee that the person(s) whose signature(s) are required to sign on the Account have signed the agreement.

CANCEL PAYMENT *30 days' notice is required before the next PAD is issued should the Payor wish to cancel prior to June 30, 2026. (Cannot exceed 30 days.)*

The Payor hereby cancels this Payor's PAD Agreement effective: **June 30, 2026**

X		**X**	
Payor Signature	Date	Payor Signature	Date

WAIVER OF PRE-NOTIFICATION AND CONFIRMATION

I/We waive any and all requirements for pre-notification or confirmation under Rule H1 of the CPA Rules of debiting, including, without limitation, pre-notification of any changes in the amount of the PAD due to a change in any applicable tax rate, top-up, or adjustment.

X		**X**	
Payor Signature	Date	Payor Signature	Date

© 1998 – 2022 CENTRAL 1 CREDIT UNION

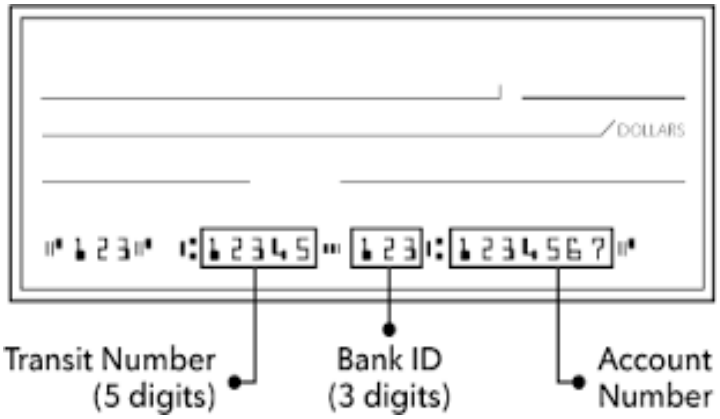

Please refer to diagram to locate your:

- 5 digit transit number
- 3 digit institution number / Bank ID
- Account number: ALL digits after institution number including zeros.
- The first 3 numbers on the left-hand side are the cheque number – Do not include

TERMS AND CONDITIONS

1. I/We hereby authorize the Payee, in accordance with the terms of my/our account agreement with the Processing Institution, to debit or cause to be debited the Account for the purposes indicated in the "Payment Type" section on page 1 of this agreement.

2. Particulars of the Account that the Payee is authorized to debit are indicated in the "Payment Details" section on page 1 of this agreement. A specimen cheque, if available for the Account, has been marked "VOID" and attached to this agreement.

3. I/We undertake to inform the Payee, in writing, of any change in the Account information provided in this agreement prior to the next due date of the PAD.

4. This agreement is continuing but may be cancelled at any time upon notice being provided by me/us, either in writing or orally, with proper authorization to verify my/our identity within the specified number of days before the next PAD is to be issued as noted in Cancel Payment section, page 1. I/We acknowledge that I/we can obtain a sample cancellation form or further information on my/our right to cancel this agreement from the Processing Institution or by visiting www.payments.ca.

5. Revocation of this agreement does not terminate any contract for goods or services that exists between me/us and the Payee. This agreement applies only to the method of payment and does not otherwise have any bearing on the contract for goods or services exchanged.

6. I/We acknowledge that provision and delivery of this agreement to the Payee constitutes delivery by me/us to the Processing Institution. Any delivery of this agreement to the Payee constitutes delivery by the Payor.

7. a) If this agreement is for business or personal PADs, unless I/we have waived any and all requirements for pre-notification or confirmation of debiting in the "Waiver of Pre-Notification and Confirmation" section on page 1 of this agreement (in which case I/we will receive a confirmation from the Payee within 5 calendar days following the date of the first PAD), I/we acknowledge that I/we will receive:

   (i) a confirmation from the Payee in accordance with Rule H1 of the Canadian Payments Association, at least 10 calendar days before the due date of the first PAD; and

   (ii) with respect to business or personal PADs recurring at set intervals, pre-notification from the Payee of the amount to be debited and the due date(s) of debiting, at least 10 calendar days before: (A) each and any change in the amount of a fixed amount PAD which results from a change in any applicable tax rate, a top-up, or other adjustment and of any change to the due date of such PAD; and (B) the due date of every variable amount PAD after the first PAD.

   b) Notwithstanding Section 7(a)(ii), no pre-notification is required for personal PADs and business PADs recurring at set intervals: (i) where the amount of the PAD will decrease as a result of a reduction in municipal, provincial or federal tax; or (ii) the amount of the PAD will change as a result of my/our direct action requesting the Payee to change the amount of the PAD (such as, but not limited to, telephone instructions or other remote measures).

   c) Pre-notification or confirmation may be given in writing or in any form of representing or reproducing words in visible form, which, if I/we have provided an email address to the Payee, includes an electronic document. The amount of pre-notification or confirmation provided will change when there is a change in the pre-notification or confirmation requirements contained in the CPA Rules.

8. If this agreement provides for PADs with sporadic frequency, I/we understand that the Payee is required to obtain an authorization from me/us for each and every PAD prior to the PAD being exchanged and cleared in accordance with Rule H1 of the CPA Rules. I/We agree that a password or security code or other signature equivalent will be issued and will constitute valid authorization for the Processing Institution to debit the Account.

9. I/We acknowledge that the Processing Institution is not required to verify that a PAD has been issued in accordance with the particulars of this agreement, including, but not limited to, the amount.

10. I/We acknowledge that the Processing Institution is not required to verify that any purpose of payment for which the PAD was issued has been fulfilled by the Payee as a condition to honouring a PAD issued or caused to be issued by the Payee on the Account.

11. I/We acknowledge that, if this agreement is for personal or business PADs or for funds transfer PADs that have recourse through the clearing system, a PAD may be disputed under the following conditions:

    a) the PAD was not drawn in accordance with this agreement;

    b) this agreement was revoked; or

    c) confirmation, pre-notification or notice was required and was not received. I/We

    further acknowledge that in order to be reimbursed, a declaration to the effect that either a), b), or c) took place must be completed and presented to the branch of the Processing Institution holding the Account on or before the 90th calendar day in the case of a personal PAD or a funds transfer PAD that has recourse through the clearing system or, in the case of a business PAD, on or before the 10th business day, in each case after the date on which the PAD in dispute was posted to the Account.

12. I/We acknowledge that any claim made after the periods set out above must be resolved solely between me/us and the Payee and there is no entitlement to reimbursement from the Processing Institution.

13. I/We acknowledge and agree that if this agreement is for funds transfer PADs and the Payee does not provide recourse through the clearing system, then no recourse will be provided through the clearing system (that is, I/we will not receive automatic reimbursement in the event of a dispute) and I/we must seek reimbursement or recourse from the Payee in the event a PAD is erroneously charged to the Account.

14. Unless this agreement is for a funds transfer PAD that does not have recourse through the clearing system, I/we acknowledge that I/we have certain recourse rights if any debit does not comply with this agreement. For example, I/we have the right to receive reimbursement for any debit that is not authorized or is not consistent with this PAD agreement. To obtain more information on my/our recourse rights I/we can contact my/our financial institution or visit www.payments.ca.

15. I/We acknowledge that the Payee may terminate this agreement upon ____ days written notice. Notwithstanding the foregoing, for One-Time PADs, this agreement will no longer be valid once the payment has been fulfilled. Any subsequent PADs will require a newly authorized PAD agreement. **In the event that the Payor cancels the goods and services agreement to which the PADs under this agreement relate, this agreement shall automatically be cancelled.**

16. I/We acknowledge that I/we understand that I/we am/are participating in a PAD plan established by the Payee and I/we accept participation in the PAD plan upon the terms and conditions set out herein.

17. I/We consent to the collection, use, and disclosure of any personal information that may be contained in this agreement to the financial institution that holds the account of the Payee to be credited with the PAD to the extent that such disclosure of personal information is directly related to and necessary for the proper application of Rule H1 of the CPA Rules.

18. This agreement is governed by the laws of _____and the federal laws of Canada applicable therein. I/We irrevocably attorn to the exclusive jurisdiction of the_____courts situated in the City of _____.