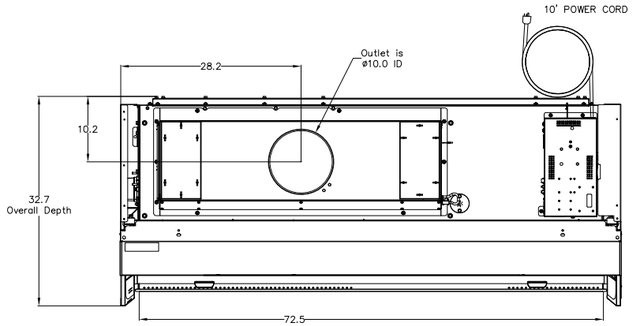

TOP VIEW

Airflow Information					
6' Canopy (when ducted): 8" Sash - 556 CFM @ 0.30" w.g.					
6' Canopy (when ducted): 10" Sash - 684 CFM @ 0.30" w.g.					
Power Requirements					
Country	Volts*	Amps	Hz	Cat #s	Plug
North America	115	16	60	01	
Japan	100	16	50/60	21	
North America	230	8	50/60	11	
Schuko	230	8	50/60	31	
China/Australia	230	8	50/60	41	
British (UK)	230	8	50/60	51	
India	230	8	50/60	71	
Operational Watts					
8" Sash: 455 Watts					
10" Sash: 485 Watts					

* +/- 10% Nominal Value

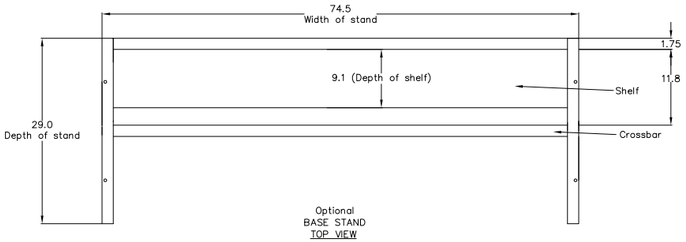

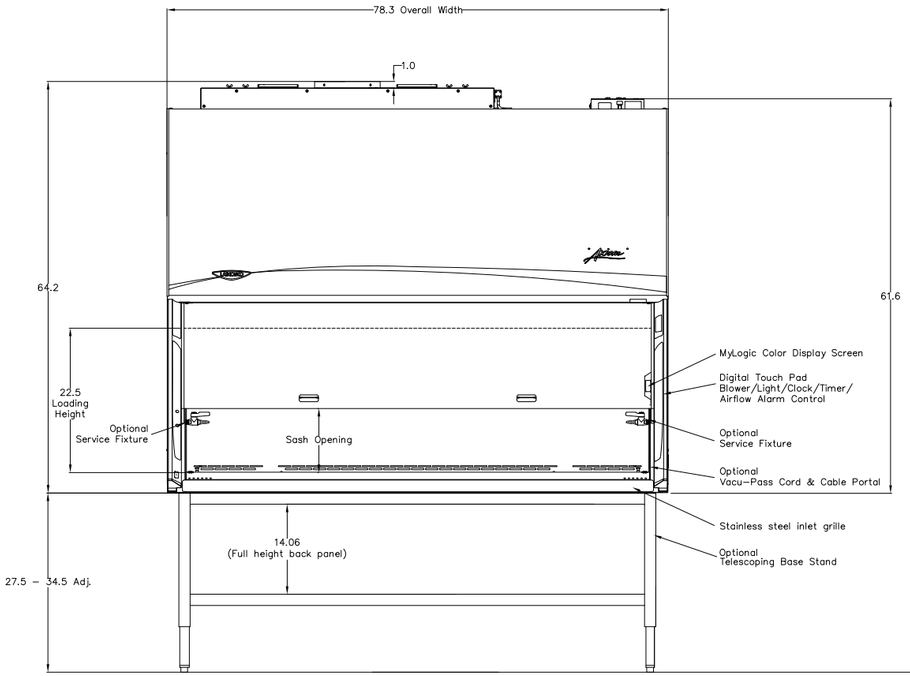

FRONT VIEW

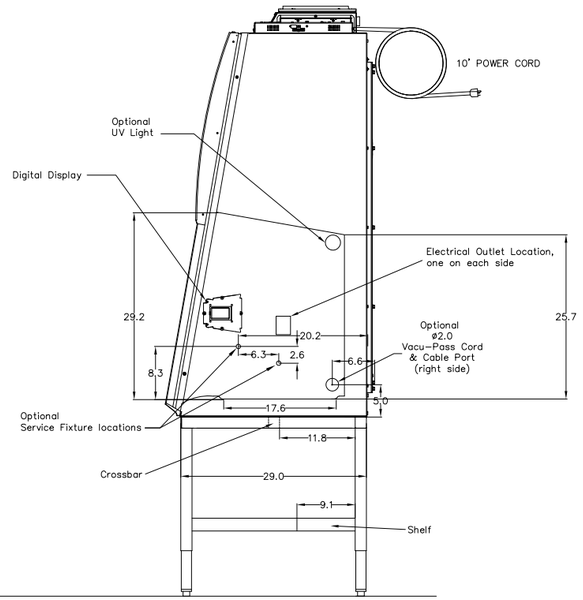

SIDE VIEW

GENERAL DESCRIPTION

Model: 3046XXX01

6'Purifier Axiom Type C1 Biological Safety Cabinet
8" or 10" Sash Opening

Certified Product
* NSF/ANSI 49 Listed
* ETL Listed to UL 61010-1
* CE Mark (230V Models)
* CAN/CSA 22.2 No. 61010-1
* ADA Compliant Operation

Exterior Superstructure
* Double Wall Construction * Powder Coated Cold Rolled Steel
* Color: Glacier White

Interior Superstructure
* Type 304 Stainless Steel * Unitized Construction
* Removable, Seamless, Dished Work Surface with lift out knobs

Side Panels
* Each Side * Removable * Color: Glacier White

Air Foil
* Curved, Type 304 Stainless Steel Grill
* Integral Armrest
* Reserve-Air Secondary Airflow Slots

Sash
* Vertical Travel
* Tempered Safety Glass
* 10 degree angle
* Convertible from 8" to 10" or 10" to 8"

Electrical
* Energy efficient DC ECM blower operation
* Direct drive LED lighting
* Outlet:
  * 115V Models:
    * Duplex, 115V / 50/60 Hz / GFCI, one on each side
    * 5 amp max
  * 230V Models:
    * Single-Plex, 230V / 50/60 Hz, one on each side
    * 3 amp max
  * With Dampened Self-Closing Flush Splash Cover
  * ADA-compliant

MyLogic LCD Information Center
* Interior mounted, color, touchpad control
* Step-by-step instruction guides when programming
* "Filter Life Remaining" bar graph for HEPA filter
* Visual and audible alarms
* Manual activation of duplexes, blower, light, etc.
* Data output via mini USB

Airflow
* Nominal inflow velocity of 105 feet per minute
* Nominal downflow velocity of 65 feet per minute
* Operation in A-mode or B-mode
* 100% exhausted center section of work surface in B-mode
* Active Protection Protocol engages during exhaust failure

Filters
* Supply & exhaust 99.99% efficient HEPA filters @ 0.3 um
* ISO Class 5 conditions per ISO 14644-1 & 2

Optional Packages:
* Accessory Package:
  * UV Light
  * Vacu-Pass Cord & Cable Port Kit
  * Service fixture – Both Sides – 1/4 turn control handle
* Telescoping Base Stand (non-welded)
  * Work surface height of 30-37"

SCALE: SCALED TO FIT

Biological Safety Cabinets for:

LABCONCO CORPORATION • KANSAS CITY MO USA 64132
800-821-5525 / 816-333-8811 • labconco.com

No.	Date

Date:

Drawing #
3046XXX01

Drawn By:

Checked By:

Approved By:

Sheet No.