DUCATI

STREETFIGHTER

This manual is an integral part of the motorcycle and must remain with it for its entire life.
The manual must accompany the motorcycle if it is sold or transferred to a new owner.
Please store this manual in a safe a place. In case of damage or loss, request a new copy by contacting:

Ducati North America, Inc.
1292 Reamwood Ave., Sunnyvale,
CA 94089 USA
Tel: 001.888.391.5446
E-mail: customerservice@ducatiusa.com
Web site: www.ducatiusa.com

Quality and safety standards of Ducati motorcycles are constantly being updated consequent to the development of new design solutions, equipment and accessories. Although the manual includes fully updated information at the time of print, Ducati Motor Holding S.p.A. therefore reserves the right to make changes without prior notification or without incurring obligations. For this reason, you may note discrepancies when comparing some illustrations with your motorcycle.

Any and all reproduction or dissemination of the contents in whole or in part is strictly prohibited. All rights are reserved by Ducati Motor Holding S.p.A. Requests for authorizations shall be made in writing to this company with specification of the reason.

WARNING: Operating, servicing and maintaining a passenger vehicle or off-road vehicle can expose you to chemicals including engine exhaust, carbon monoxide, phthalates, and lead, which are known to the State of California to cause cancer and birth defects or other reproductive harm. To minimize exposure, avoid breathing exhaust, do not idle the engine except as necessary, service your vehicle in a well-ventilated area and wear gloves or wash your hands frequently when servicing your vehicle.
For more information go to www.P65Warnings.ca.gov/passenger-vehicle.

Owner's manual

US/CANADA

STREETFIGHTER V2

Dear Ducatista,

thank you for trusting us with the purchase of your new Streetfighter V2.

We recommend that you **read the use and maintenance manual carefully**, to quickly get familiar with your Ducati and **make the most of all its features**. In the manual, we provide lots of useful advice and information on your **safety**, on how to **take care** of your bike and on how to maintain its value through **correct maintenance** by specialist Service Centers.

You can also find this manual in **digital format, always up-to-date, in the dedicated area of the Ducati website** and **in the MyDucati App**, which can be consulted both from a PC and a phone.

In this way, you will always have the **most up-to-date version of the manual** available and you will also find **information and frequently asked questions** regarding your bike and the world of Ducati.

You can send suggestions for improvement regarding the contents of this Use and maintenance manual to the following address: OwnerManual@ducati.com

This manual forms an integral part of the bike and must be kept with it throughout its service life. If the bike is resold, the manual must always be handed over to the new owner. The quality standards and safety of Ducati bikes are steadily improved as new design solutions, equipment and accessories are developed. While the information contained in this manual is current at the time of going to print, Ducati Motor Holding S.p.A. reserves the right to make changes at any time without notice and without any obligations. For this reason, the illustrations in this manual might differ from your bike.

Important

Check the FAQs and tutorials dedicated to your bike on the Ducati website to keep up to date with all the latest news regarding its functions and features.
The information in the manual is current at the time of going to print. The quality and safety standards of Ducati motorbikes are constantly updated. Check on the Ducati website the functions and features in the updated Owner's Manual of your motorbike.

Any and all reproduction or spreading of the contents herein in whole or in part is forbidden. All rights reserved to Ducati Motor Holding S.p.A. Any request for written authorization shall be addressed to this company, specifying the reasons for request. For any servicing or suggestions you might need, please contact our authorized service centers.

For further information, please contact us at:
contact_us@ducati.com
Our Advisors are available to give you suggestions and useful tips.

Important

For further information, please contact the Ducati Support by clicking on “Contact us” in the Services and Maintenance section of the www.ducati.com website.
Our Advisors are available to give you suggestions and useful tips.

Enjoy your ride!

Table of Contents

Roadside Assistance 9
Roadside Assistance 9

Software updates 11
Software updates 11

Infotainment 12
Infotainment 12
Bluetooth device pairing and management 13
Phone.....19
Music.....23

General Information..... 25
Acronyms and abbreviations used in the Manual..... 25
Safety guidelines 25
Warning symbols used in the manual 25
Intended use.....27
Rider's obligations 27
Reporting of safety defects..... 28
Rider's training..... 29
Apparel 29
"Safety ""Best Practices""..... 30
Refueling.....32
Carrying the maximum load allowed 33
Information about carrying capacity.....33
Hazardous products - warnings..... 34
Vehicle identification number.....36
Engine identification number 37
Plate position 38
Noise and exhaust emission control system information..... 44
California emission control warranty statement Your warranty rights and obligations 45
Owner's warranty responsibilities 45
California evaporation emission system 47
Ducati limited warranty on emission control system..... 48

Main components and devices 52
Position on the vehicle 52
Fuel tank plug 53
Seat lock 54
Battery charge maintaining..... 58
Side stand 60
Bluetooth control unit 62
Steering damper 64
Front fork adjustment 65
Adjusting the rear shock absorber 67

Controls 69
Position of motorcycle controls 69
Switchgears 70
Light control 72
Keys 76
Ignition switch and steering lock 78
Restoring motorcycle operation via the PIN code 79
Clutch lever 80
Throttle twistgrip 81
Front brake lever 82
Rear brake pedal..... 83
Gear change pedal..... 84
Adjusting the gear change pedal and the rear brake 85

Riding the motorcycle 86
Motorcycle running-in period 86
Pre-ride checks..... 87
Engine start/stop 90
Moving off 94
Braking 95
Parking..... 96
Refueling.....97
Tool kit and accessories..... 98

Instrument panel (Dashboard)..... 99
Instrument panel 99
Warning lights..... 100
Main page items 104
Riding Mode 109
Engine rpm indication 112
Info display 113
Heated handgrips.....117
Lap..... 119
Setting menu.....124
Setting menu - Riding Mode 126

Setting menu - Riding Mode - Engine 128
Setting menu - Riding Mode - ABS 129
Setting menu - Riding Mode - DTC 135
Setting menu - Riding Mode - DWC 141
Setting menu - Riding Mode - EBC 141
Setting menu - Riding Mode - DQS 152
Setting menu - Riding Mode - Default 154
Setting menu - PIN Code 156
Setting menu - DRL 161
Setting menu - Backlight.....163
Setting menu - Date and time 164
Setting menu - Service.....167
Setting menu - Lap 170
Setting menu - Tire calibration..... 173
Setting menu - Turn indicators.....178
Setting menu - Units 180
Setting menu - DDA 186
Setting menu - Info..... 188
Ducati Link app connection 189
Warning displaying 192
Error warnings.....195

Main use and maintenance operations 197
Removing the fairings 197
"Checking coolant level and topping up, if necessary".....198
Checking brake and clutch fluid level 199
Checking brake pads for wear 201
Charging the battery..... 202
Checking drive chain tension 206
Lubricating the drive chain 208
Replacing the high and low beam bulbs.... 213
Turn indicators 214
Aligning the headlight.....215
Adjusting the rear-view mirrors..... 217
Tubeless tires 218
Check engine oil level 220
Use of Ducati Corse Performance Oil by Shell 221
Cleaning the motorcycle 222
Cleaning and replacing the spark plugs 224
Storing the motorcycle 225
Important notes..... 225
Vehicle transport 227

Scheduled maintenance chart.....228
Scheduled maintenance chart: operations to be carried out by the dealer 228

Scheduled maintenance chart: operations to be carried out by the customer 232

Specifications 233

Weights 233
Overall dimensions..... 234
Top-ups 235
Engine.....237
Timing system..... 238
Performance 239
Spark plugs 239
Fuel system.....240
Brakes 240
Transmission 241
Frame.....241
Wheels 242
Tires..... 242
Suspensions..... 242
Exhaust system..... 243
Available colors 243
Electric system 244

Open source software 250

Information about open source software . 250

Declarations of conformity 251

Declarations of conformity 251

Roadside Assistance

Important
All information is detailed and available on the Ducati website of the respective country.

Roadside Assistance

ACI Global Servizi

The Ducati Card Assistance Program, created in collaboration with Ducati and ACI Global Services, offers assistance in case of breakdown and/or accident to the Ducati Customer. The service is active 24 hours a day, 365 days a year, for 24 months (in case of extended warranty the relevant conditions will apply) from the date of delivery of the bike or for the period of coverage of the Ever Red warranty extension.

The roadside assistance services include:

- Roadside assistance and towing

and may be requested in the following countries: Canada and United States.

Call Center telephone numbers

The numbers to contact to request the services listed above are the following:

- emergency number 800 234 1353
- pay call 702 564 7095

Software updates

Software updates

Some components of the motorbike are operated by or involve the use of software. Such software may be subject to or require updates.

- Any updates that may be necessary to ensure the safety of the motorbike will be communicated by Ducati and made available for installation at the Ducati Service network.
- Information on updates that may be necessary to maintain the conformity of the motorbike is published on the Ducati website and the updates are made available, for two years from the date of purchase of the motorbike or for the longer term of the conventional warranty (if active for the motorbike), for installation at the Ducati Service network.
- Further updates and new versions of the software will be made available, in compliance with the motorbike maintenance schedule indicated in this Owner's Manual, for installation at the Ducati Service network when the motorbike is serviced.

We invite you to periodically consult the section of the Ducati website dedicated to updates and to download and install the My Ducati App to keep informed of available updates.

Attention

In order to maintain the motorbike's legal and, if applicable, conventional warranty of conformity (if applicable), you are required to install the updates made available as soon as possible and, in any case, within a reasonable period of time, also taking into account the importance of the update.
If the updates are not installed within a reasonable period of time, Ducati shall not be liable for any conformity or safety defects deriving from the failure to install the update.

Infotainment

Infotainment

The bike's infotainment system allows devices such as smartphones, rider and passenger helmet intercoms and satellite navigator to be connected via Bluetooth, allowing incoming and outgoing phone calls to be managed and music on the smartphone to be played.

- For pairing and managing Bluetooth devices, see page 13.
- For managing phone calls, see page 19.
- For managing the music player see page 23.

Bluetooth device pairing and management

This function is available only if the Bluetooth control unit is installed and allows the user to manage any paired Bluetooth devices and add more.

- Use buttons (1) and (2) from the Interactive Menu to select the “Setting menu” item and press ENTER (3).
- Select the “Bluetooth” item and press ENTER (3).

“Pairing” are “Paired devices” are displayed:

- “Pairing” allows pairing a new Bluetooth device.
- “Paired devices” allows viewing and erasing paired devices.

Use buttons (1) and (2) to scroll and select the desired item. Press ENTER (3) to confirm.

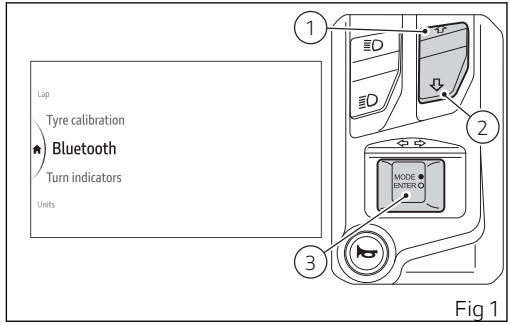

Fig 1

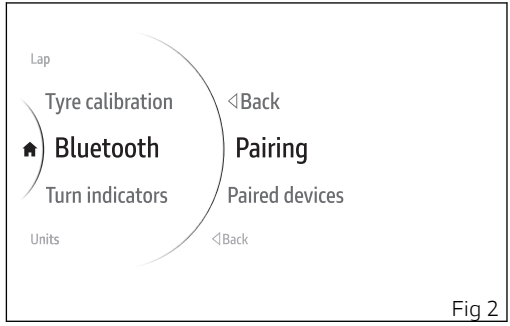

Fig 2

Pairing

This function allows pairing a new Bluetooth device. The instrument panel manages 4 types of Bluetooth devices and a maximum of 5 devices paired and/or connected: 2 smartphones, 1 rider earphone, 1 passenger earphone, 1 navigator. If you want to pair a new smartphone, earphone or navigator it is necessary to first disconnect one of the corresponding devices already paired (see section “Paired devices”).

Note
Before pairing a new device, make sure that its Bluetooth connection is active and that it can be detected by other Bluetooth devices. Always refer to the provisions under the device instructions.

Note
During the pairing procedure user may be required to confirm it directly on the device (e.g. smartphone). Refer to the device messages.

- Use buttons (1) and (2) from the Interactive Menu to select the “Setting menu” item and press ENTER (3).

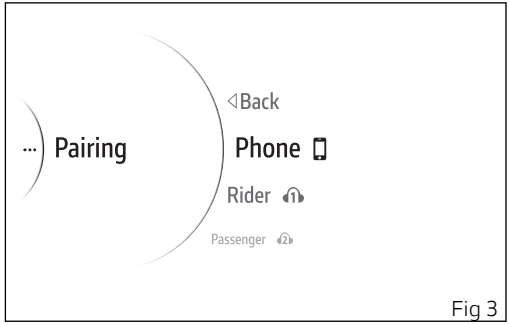

Fig 3

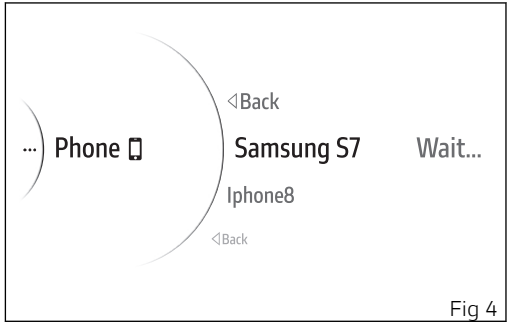

Fig 4

- Select the “Bluetooth” item and press ENTER (3).
- Select the “Pairing” item and press ENTER (3) (Fig 2).

The list of the 4 types of devices that can be managed by the instrument panel (Fig 3) is displayed. Select type of device to be paired and press ENTER button.
With buttons (1) and (2) select the type of device you wish to pair. Press ENTER (3) to confirm and start the device search.

The instrument panel starts searching for nearby Bluetooth devices, and displays the message "Wait..." followed by a list of detected devices (Fig 4). As soon as the search stage is over, system gives out a list of all detected devices.
Use the buttons (1) and (2) to select the required device and press ENTER (3).

The display shows the message "Pairing..." on the right, while waiting validation by the Bluetooth device.
If the pairing of the device has been successful, the message “Paired” is displayed on the right for a few seconds and then the instrument panel returns to the previous menu. If not, the message "Pairing Error" is displayed and user is allowed to repeat the pairing procedure.

Paired devices

This function allows viewing and erasing paired Bluetooth devices.
Maximum of 2 smartphones, 1 rider earphone, 1 passenger earphone, 1 navigator can be paired up.

- Use buttons (1) and (2) from the Interactive Menu to select the “Setting menu” item and press ENTER (3).
- Select the “Bluetooth” item and press ENTER (3).
- Select the “Paired devices” item and press ENTER (3).

The paired devices are listed. Press buttons (1) and (2) to select the desired device and press ENTER (3). The message “Delete?” is shown on the right (Fig 6), press ENTER (3) to delete the selected device from the list: the message “Wait...” is displayed for a few seconds and then the list of paired devices is updated.

Note
If there are no paired devices, the message No Device is displayed.

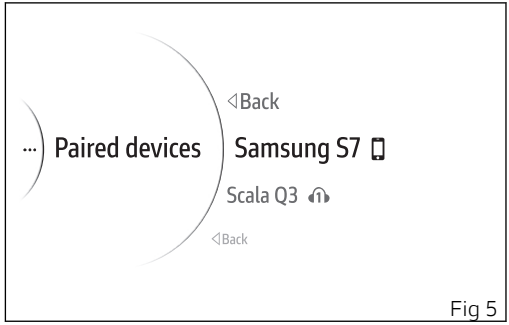

Fig 5

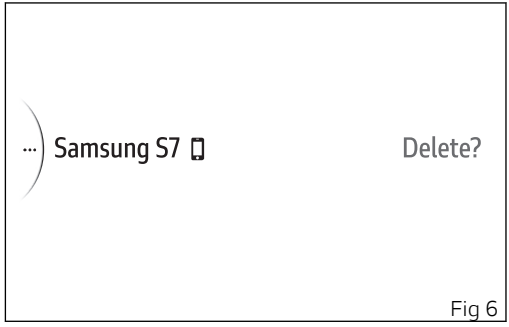

Fig 6

Attention

Smartphone and Bluetooth Headset device manufacturers may incorporate certain changes within the standard protocols over the course of the lifecycle of the device (Smartphones and Earphones).

Attention

These changes are outside the control of Ducati and may result in Smartphone and Bluetooth Headset devices functionality becoming impaired (sharing Music, multimedia player, etc.) and may equally affect some types of Smartphones (depending on supported Bluetooth profiles). This is why Ducati cannot guarantee multimedia player proper operation for:

1) the entire range of headphones and Smartphones available on the market;
2) Smartphones that do not support the required Bluetooth profiles.

Check that your Smartphone supports the following profiles:

- MAP profile: for a correct display of SMS and MMS notifications;
- PBAP profile: for a correct display of the Smartphone contact list.

Paired Bluetooth device icons

Once paired, Bluetooth devices are displayed as follows:

1) smartphone connected;
2) rider helmet intercom connected;
3) passenger helmet intercom connected;
4) rider helmet intercom connected and passenger helmet intercom associated;
5) passenger helmet intercom connected and rider helmet intercom associated;
6) rider and passenger helmet intercom connected;
7) satellite navigator connected.

Icons are black in the “day” mode or white in the “night” mode when the corresponding device is connected via Bluetooth. They are gray if the corresponding device is paired but not connected. To change the “day” or “night” display mode, refer to the chapter “Setting menu - Backlight” (page 163). If a smartphone is connected to the instrument panel, the system allows managing the music player, the list of the last calls and receiving or making phone calls. Refer to sub-sections “Phone” (page 19) and “Music” (page 23).

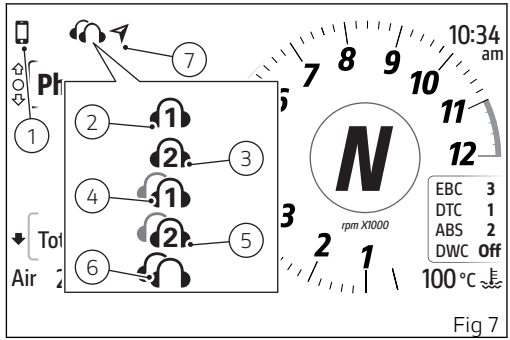

Fig 7

Phone

This function is available only if the Bluetooth control unit is installed and can be found in the Interactive Menu: it displays the list of the last missed, made or received calls and can only be selected if a smartphone has been connected via Bluetooth.

For the Bluetooth pairing procedure, refer to subsection “Bluetooth device pairing and management” (page 13).

- Select the Interactive Menu (A, Fig 8) by pressing and holding button (1) pressed for a long time.
- Use buttons (1) and (2) to select item "Phone” (B, Fig 8)and press the ENTER button (3).

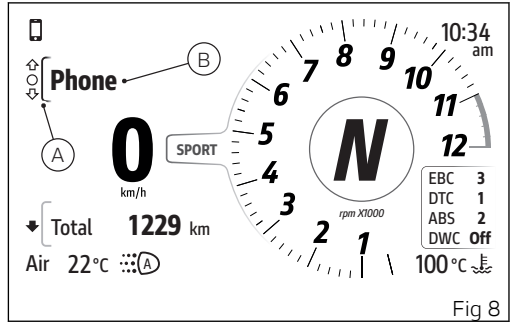

Fig 8

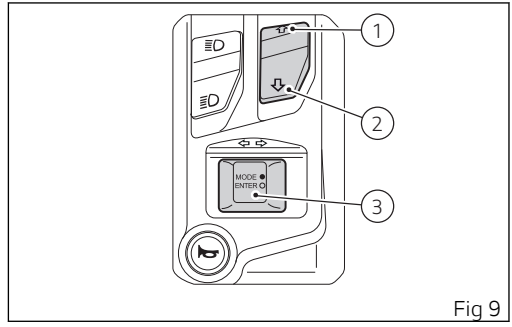

Fig 9

The relevant window (C, Fig 10) is shown listing the last 7 calls made, received or missed. If a number or contact is present several times among the last calls, this is displayed only once.
Use buttons (1) and (2) to scroll through the calls in the list. Press ENTER (3) to make a call to the number or contact selected in the list.
To close the window, press and hold button (1) for a long time.

Incoming call

When you receive a call, the window is shown with the name or number of the caller as well as the items “Accept” and “Decline” (D, Fig 11).
In this case, shortly press the ENTER button (3) to select the "Accept" or "Decline" item, press the ENTER button (3) for a long time to perform the action of the selected item.

Call in progress

When a call is in progress, the window is shown with the name or number of the contact as well as the item “End call” (E, Fig 11). To end the call, press the ENTER button (3).

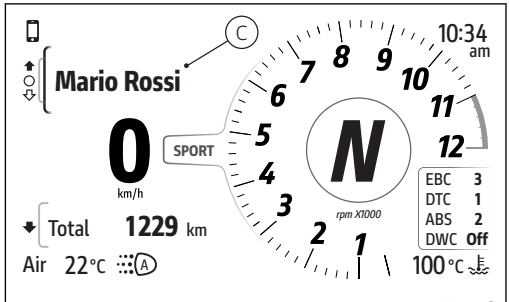

Fig 10

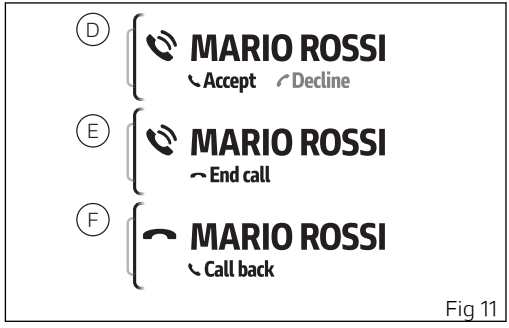

Fig 11

Call back

At the end of a call or after declining an incoming call, the window (F, Fig 11) will be displayed for 5 seconds with the name or number of the contact and “Call back”: press the ENTER button (3) to start the call.

Note
The music player will be paused during a call.

Missed call

In case of missed call, the display will show the symbol (G, Fig 12)for 60 seconds, flashing for the first 3 seconds.

Note
The number of missed calls is not displayed.

Message received

In case of received message, the display will show the symbol (H, Fig 13)for 60 seconds, flashing for the first 3 seconds.

Note
The number of received messages or e-mails is not displayed.

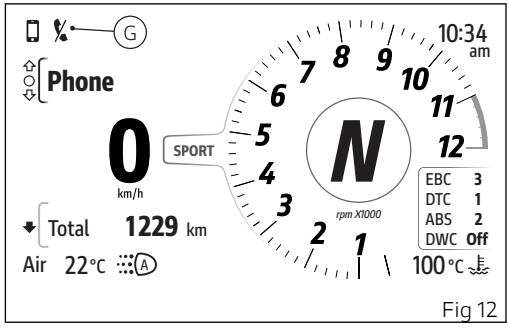

Fig 12

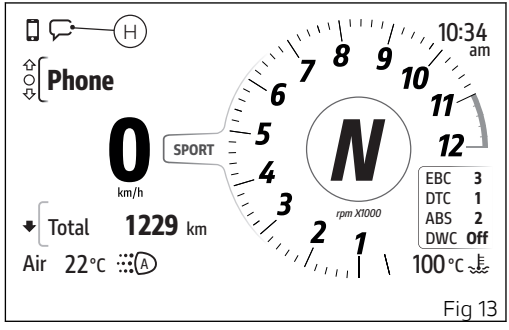

Fig 13

Music

This function is available only if the Bluetooth control unit is installed and can be found in the Interactive Menu: it allows activating, deactivating and managing the music player and can be selected only if a smartphone has been connected via Bluetooth.

For the Bluetooth pairing procedure, refer to subsection “Bluetooth device pairing and management” (page 13).

- Select the Interactive Menu (A, Fig 14) by pressing and holding button (1) pressed for a long time.
- Use buttons (1) and (2) to select item “Music” (B, Fig 14)and press the ENTER button (3).

Note

Music is played on the smartphone connected via Bluetooth. If the rider and passenger intercoms are also connected to the instrument panel the music is played through the intercoms.

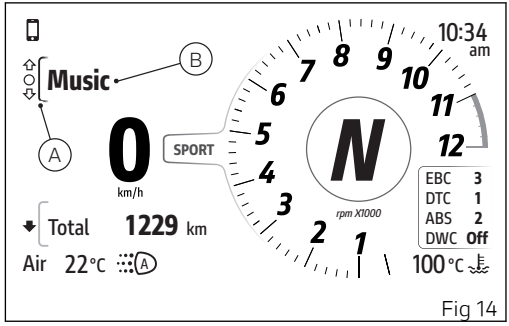

Fig 14

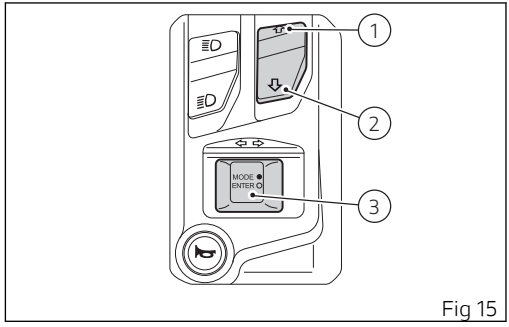

Fig 15

Window (C, Fig 16) will be displayed where the controls of the music player and the track currently playing are shown.

- By briefly pressing buttons (1) and (2) you can increase and decrease the volume respectively;
- by briefly pressing the ENTER button (3) it is possible to scroll and select the following controls, to activate the selected control press the ENTER button (3) for a long time:
  - ◀◀ previous track
  - ▶ play or ❚❚ pause
  - ■ stop
  - ▶▶ next track

Pressing and holding button (1) for a long time while a track is playing will close the music player window but the track will not be stopped.
When the ENTER button (3) is pressed with the stop control ■ selected, the music player window is closed and the current track is stopped.

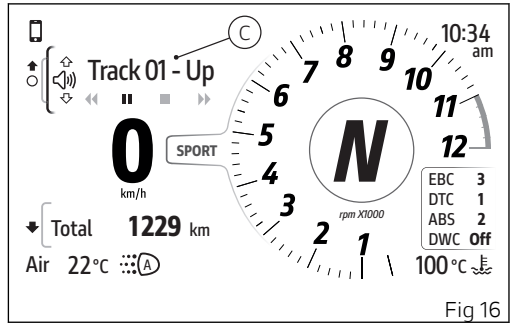

Fig 16

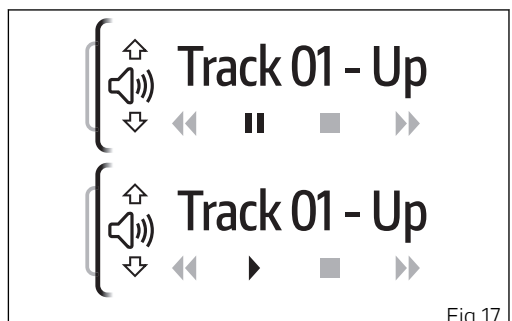

Fig 17

General Information

Acronyms and abbreviations used in the Manual

ABS	Anti-lock Braking System
DDA	Ducati Data Analyzer
DQS	Ducati Quick Shift
DRL	Daytime Running Light
DSC	Ducati Slide Control
DTC	Ducati Traction Control
DWC	Ducati Wheelie Control
EBC	Ducati Engine Brake Control
ECU	Engine Control Unit
GPS	Global Positioning System
IMU	Inertial Measurement Unit

Safety guidelines

Your safety and that of others are very important. Ducati Motor Holding S.p.A. urges you to ride your motorcycle responsibly.
Before using your motorcycle for the first time, please read this manual carefully from start to finish and closely follow the guidelines. This will allow you to obtain all information regarding a correct use and maintenance. If you have any doubts or questions, consult a Dealer or Authorized Service Center.

Warning symbols used in the manual

Different forms of information regarding potential hazards that may affect you or others have been used. These include:

- Safety stickers on the motorcycle;
- Safety warnings preceded by a warning symbol and by one or the two words CAUTION or IMPORTANT.

Attention

Failure to observe these instructions may lead to a hazardous situation and cause severe injury to the rider or others, or even death.

Important
Possibility of damaging the motorcycle and/or its components.

Note
Additional information regarding the job being performed.

The terms RIGHT and LEFT are referred to the motorcycle viewed from the riding position.

Intended use

This motorcycle must be used only on road surfaces with asphalt or flat and even pavement. This motorcycle may not be used on dirt roads or for off-road riding.

Attention

Using the bike off-road may cause the rider to lose control, which in turn may lead to vehicle damage, injury or death.

Attention

This motorcycle must not be used for towing or for the addition of a sidecar, since this may cause a loss or control and consequent accident.

Attention

The total weight of the motorcycle in running order, with 90% of fuel, must not exceed 440.92 lb (200 kg)

Important

Using the motorcycle under extreme conditions, such as very damp and muddy roads or dusty and dry environment, could cause above-average wear of components like the drive system, the brakes or the air filter. If the air filter is dirty, the engine could get damaged. Therefore, this might translate in required service or replacement of the wear parts earlier than specified in the scheduled maintenance chart.

Rider's obligations

All riders must hold a driver's license.

Attention

Riding without a license is illegal and punishable by law. Make sure you always have your license on you when setting out on the motorcycle. Do not allow inexpert riders or those not in possession of an authorized driver's license to ride the motorcycle.

Do not ride the motorcycle when under the influence of alcohol or drugs.

Attention
Riding under the influence of alcohol or drugs is illegal and punishable by law.

Avoid taking medication before riding the motorcycle if you have not consulted your doctor about potential side effects.

Attention
Some medications may induce sleepiness or other effects that impair reflexes and the ability of the rider to control the motorcycle, which may lead to accident.

Some countries require mandatory insurance coverage.

Attention
Check the laws applicable to your country. Take out an insurance policy and keep the policy in a safe place along with the other motorcycle documents.

To protect the safety of the rider and/or passenger, some countries have made it a law to wear a homologated helmet.

Attention
Check the laws applicable to your country. Riding without a helmet may be punishable by a fine.

Attention
Failure to be wearing a helmet in case of accident increases the chance of serious injury and even death.

Attention
Make sure that the helmet complies with safety specifications, provides excellent visibility, is the correct size for the head, and has the certification label affixed to the helmet surface conforming to the standards in force in your state. Road traffic laws differ from state to state. Check the laws in force in your country before riding the motorcycle and pay strict adherence to them .

Reporting of safety defects

If you believe that your vehicle has a defect whichcould cause a crash or could cause injury or death,you should immediately inform the NationalHighway Traffic Safety Administration (NHTSA) inaddition to notifying
Ducati North America, Inc.
1292 Reamwood Ave., Sunnyvale,

CA 94089 USA
Tel: 001.888.391.5446
E-mail: customerservice@ducatiusa.com
Web site: www.ducatiusa.com
If NHTSA receives similar complaints, it may open an investigation, and if it finds that a safety defect exists in a group of vehicles, it may order a recall and remedy campaign. However, NHTSA cannot become involved in individual problems between you, your dealer, or Ducati North America. To contact NHTSA, you may either call the Auto Safety Hotline toll-free at 1-800-424-9393 (or 366-0123 in Washington, D.C. area) or write to: NHTSA, 1200 New Jersey Avenue SE W43-488, Washington, D.C. 20590. You can also obtain other information about motor vehicle safety from the Hotline.

Rider's training

Accidents are frequently due to inexperience. Riding, maneuvering and or braking are carried out differently from other vehicles.

Attention

A rider's lack of preparation or an inappropriate use of the vehicle may result in a loss of control, death or serious damage.

Apparel

Clothing in the use of the motorcycle plays an important role in safety, as the motorcycle provides a person no protection from impact in the same way as an automobile.

Proper riding gear includes helmet, eye protection, gloves, boots, back protector, long sleeve jacket and long trousers.

- The helmet must meet the requirements listed at "Rider's obligations"; if your helmet does not have a visor, use suitable eye wear;
- Use certified, five-finger gloves made from leather or abrasion-resistant material; with knuckle protectors and reinforcements on the fingers;
- Boots or shoes used for riding must have non-slip soles and ankle protection;
- The back protector must be certified and sized based on the physical constitution of the rider, according to the manufacturer's specifications;
- Jacket, trousers or riding suit must be certified, made from leather or abrasion-resistant material and have high-visibility colors and inserts. Select products with certified protectors.

Important
In any case, avoid wearing loose or floppy clothing that can become stuck in the motorcycle parts.

Important
For your safety this type of clothing must be used in both summer and winter.

Important
For the safety of the passenger, make sure that he or she also wears appropriate clothing.

"Safety ""Best Practices"""
Before, during and after use, remember to follow some simple rules that are extremely important for safety and for maintaining the motorcycle at top efficiency.

Important
During the break-in period, carefully observe the instructions contained in section "Riding the motorcycle" of this Manual.
Failure to follow these instructions releases Ducati Motor Holding S.p.A. from any liability whatsoever for any engine damage or shorter engine life.

Attention
Do not ride the motorcycle unless you are well familiarized with the controls to be used during the ride.

Before, during and after use, remember to follow some simple rules that are extremely important for safety and for maintaining the motorcycle at top efficiency.

Perform the checks recommended in this manual under “Checks before riding” before each ride.

Attention
Failure to perform checks may cause damage to the vehicle and serious injury to the rider and/or passenger.

Attention
Start the engine when outdoors or in a well ventilated place. Never start the engine in a closed environment.
Exhaust gases are poisonous and may lead to loss of consciousness or even death within a short time.
During the ride, assume a correct body position and make sure the passenger does the same.

Important
The rider should ALWAYS keep both hands on the handlebar.

Important
Both rider and passenger should keep their feet on the footpegs when the motorcycle is in motion.

Important
The passenger should always hold on to the grab handles under the seat with both hands.

Important
Be very careful when maneuvering intersections or when riding in areas near exits from private grounds, parking lots or access roads to highways.

Important
Be sure you are clearly visible and do not ride in the blind spot of the vehicles ahead.

Important
ALWAYS signal your intention to turn or pull over to the next lane with due warning using the turn indicators.

Important
Park your motorcycle where no one is likely to hit it, and use the side stand. Never park on uneven or soft ground or your motorcycle may fall over.

Important
Visually inspect the tires at regular intervals for detecting cracks and cuts, especially on the side walls, bulges or large spots that are indicative of internal damage. Replace them if badly damaged. Remove any stones or other foreign bodies caught in the tread.

Attention
The engine, exhaust pipes and mufflers stay hot for a long time after the engine has been turned off. Be especially careful not to touch the exhaust system with any part of the body and never park the motorcycle near flammable materials (wood, leaves, etc.). Do not cover the motorbike with the canvas, when the engine and exhaust system are hot, to avoid damaging it.

Refueling

Refuel the motorcycle in an open area and with the engine switched off.
Do not smoke or ever use flames during refueling.
Be careful never to drop fuel on the engine or exhaust pipe.
When refueling, do not fill the tank completely: fuel should never be touching the rim of filler recess.
When refueling, avoid inhaling fuel vapors and take care that they do not come in contact with eyes, skin or clothing.

Attention

The vehicle is compatible only with fuel having a maximum ethanol content of 10% (E10).
Using fuel with ethanol content over 10% is prohibited. Using it could result in severe damage of the engine and motorcycle components. Using fuel with ethanol content over 10% will render the Warranty null and void.

Attention

In case of malaise caused by prolonged inhalation of fuel vapors, stay outdoors and consult a physician. In case of contact with eyes, rinse eyes thoroughly with water. In case of contact with skin, wash the area immediately with soap and water.

Attention

Fuel is highly flammable. If it accidentally spills onto clothes, change them.

Carrying the maximum load allowed

Your motorcycle is designed for long-distance riding with the maximum load allowed carried in full safety. Even weight distribution is critical to preserving these safety features and avoiding difficulties when performing sudden maneuvers or riding on bumpy roads.

Attention

Do not exceed the total permitted weight for the motorcycle and pay attention to the information below regarding load capacity.

Information about carrying capacity

Important

Arrange your luggage or heavy accessories in the lowest possible position and close to motorcycle center.

Important

Never fix bulky or heavy objects to the steering head or front mudguard, as this would affect stability and be dangerous.

Important

Be sure to secure the luggage to the supports provided on the motorcycle as firmly as possible. Improperly secured luggage may affect stability.

Important

Do not insert any objects you may need to carry into the gaps of the frame, as these may interfere with moving parts.

Attention

Make sure the tires are inflated to the proper pressure and that they are in good condition.

Refer to paragraph “Tubeless tires”.

Hazardous products - warnings

Used engine oil

Attention

Prolonged or repeated contact with used engine oil may cause skin cancer. If exposed to used engine oil on a daily basis, make it a rule to wash your hands thoroughly with soap immediately after use. Keep away from children.

Brake lining debris

Never attempt to clean the brake assembly using compressed air or a dry brush.

Brake fluid

Attention

The brake fluid used in the brake system is corrosive. In the event of accidental contact with eyes or skin, wash the affected area with generous quantities of running water.

Attention

Avoid spilling brake fluid onto plastic, rubber or painted parts of the motorcycle to avoid the risk of damage. Protect these parts with a clean shop rag before servicing the motorcycle. Keep away from children.

Coolant

Engine coolant contains ethylene glycol, which may ignite under particular conditions, producing invisible flames. Although the flames from burning ethylene glycol are not visible, they are still capable of causing severe burns.

Attention

Take care not to spill engine coolant on the exhaust system or engine parts.

These parts may be hot and ignite the coolant, which will subsequently burn with invisible flames. Coolant (ethylene glycol) is an irritant and is poisonous when ingested. Keep away from children. Never remove the radiator cap when the engine is hot. The coolant will be scalding hot and is under high pressure.

The cooling fan operates automatically: keep hands well clear and make sure your clothing does not get caught in the fan.

Battery

Attention

The battery gives off explosive gases; keep it away from any source of ignition such as sparks, flames and cigarettes. When charging the battery, ensure that the working area is properly ventilated and that ambient temperature is below 104° F (40° C). Never try to open the battery: it does not need to be filled with acid or other types of fluid.

Vehicle identification number

Note

These numbers identify the motorcycle model and should always be indicated when ordering spare parts.

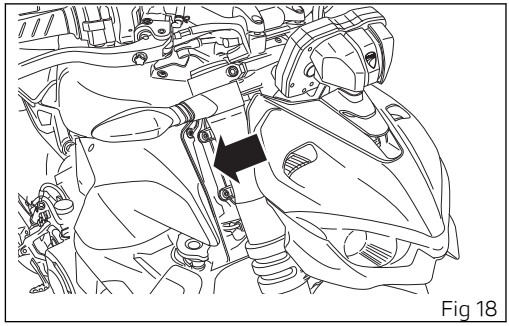

Fig 18

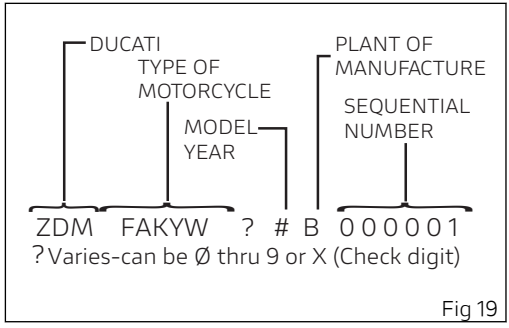

Fig 19

Engine identification number

Note

These numbers identify the motorcycle model and should always be indicated when ordering spare parts.

The engine identification number is located in the bike front side on the horizontal head cylinder lower side, near the starter motor and the generator cover.

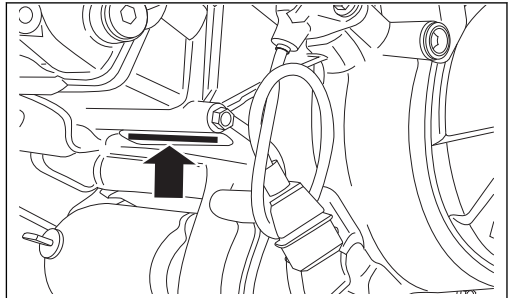

Fig 20

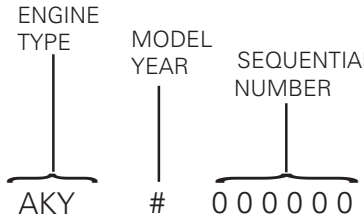

Fig 21

Plate position

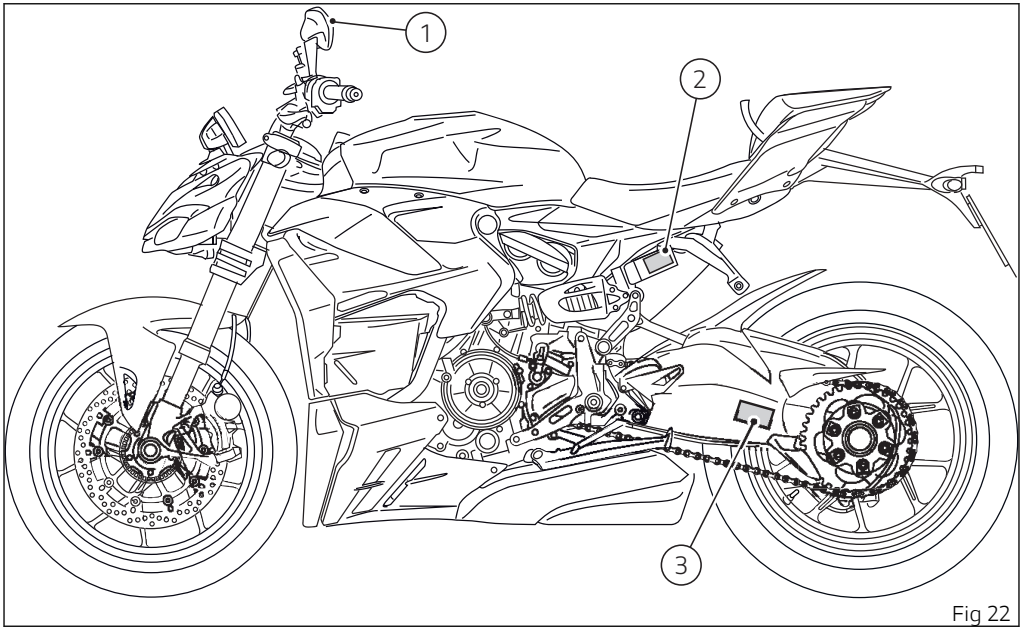

Fig 22

1

OBJECT IN MIRROR ARE CLOSER THAN THEY APPEAR

Cod. 433 1 166 1A

2

WARNING

CONTAINS HIGHLY COMPRESSED GAS. USE ONLY PERFECTLY DRY NITROGEN GAS. OTHER GASES MAY CAUSE EXPLOSION. DO NOT INCINERATE. REFER TO OWNER'S MANUAL FOR REGULATING GAS.

3

Girare la ruota posteriore per trovare la posizione in cui la catena risulta più tesa. Appoggiare il veicolo sulla stampella laterale . Con la pressione del dito, spingere la catena verso il basso nel punto di misura e poi rilasciarla. Misurare la distanza (A) tra il centro dei perni della catena ed il forcellone davanti alla vite di fissaggio pattino catena (B), che deve risultare : A = 46÷48 mm. Questa indicazione è valida solo con i settaggi standard con cui la moto viene consegnata.

Make the rear wheel turn until you find the position where chain is tightest. Set the vehicle on the side stand. With a finger, push down the chain at the point of measurement and release. Measure the distance (A) between the pin centre of the chain and the swinging arm, in front of the chain sliding shoe (B) retaining screw, which must be: A = 46÷48 mm. This indication is valid only with motorbike delivery standard settings.

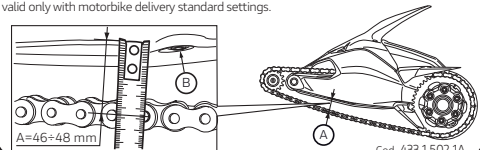

Cod. 433.1.502.1A

Fig 23

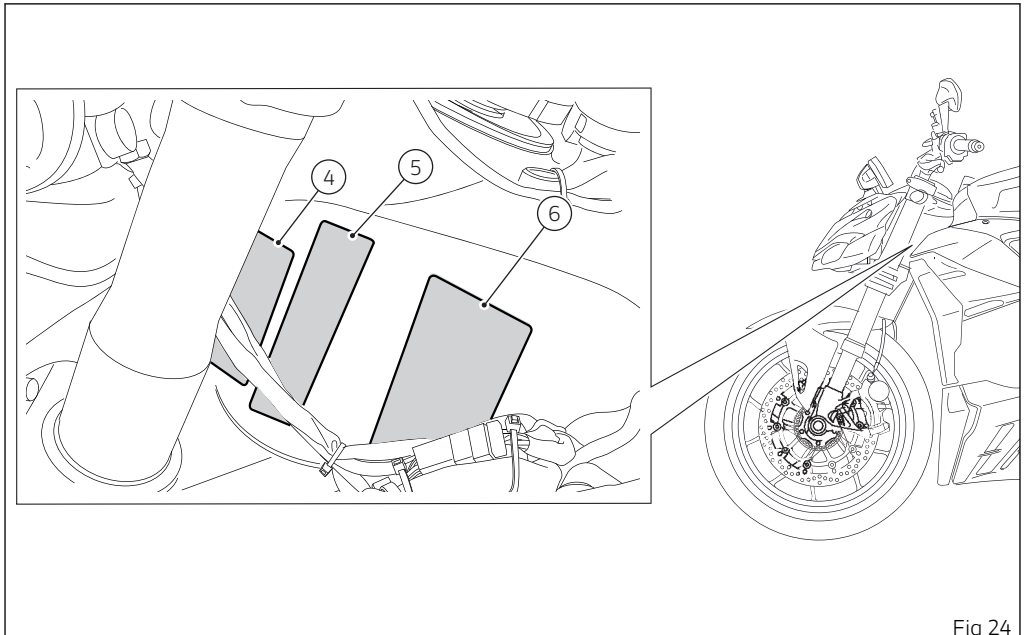

Fig 24

VEHICLE EMISSION CONTROL INFORMATION

432.1.C03.1C

Engine displacement: **955 cc**
Engine family: **RDUCC0.96SFT**
Engine exhaust control system:
SFI, 2 TWC, PAIR, 2 HO2S
Evap family: **RDUCU0015PV1**
Permeation family: **RDUCPMETAL03**

THIS VEHICLE CONFORMS TO U.S. EPA AND CALIFORNIA REGULATIONS APPLICABLE TO 2024 MODEL YEAR NEW MOTORCYCLES AND IS CERTIFIED TO 0.8 HC+NOx G/KM ENGINE FAMILY EXHAUST EMISSION STANDARD IN CALIFORNIA

ENGINE TUNEUP SPECIFICATIONS

ITEM	SPECIFICATIONS	INSTRUCTIONS
IGNITION TIMING:	16° bTDC at idle speed	No adjustements
IDLE SPEED (RPM):	1350 ± 100	No adjustements
IDLE MIXTURE:		No adjustements
VALVE CLEARANCE (in & ex):	Opening 0.15 ÷ 0.20 mm Closing 0.08 ÷ 0.13 mm	See Service Manual
SPARK PLUG: NGK MAR9A-J		OIL: SAE 15W/50
SPARK PLUG GAP (mm): 0.7 ÷ 0.9		FUEL: Unleaded gasoline

DUCATI MOTORHOLDING spa - **Bologna - ITALY** - Importer: **DUCATI** North America Inc. - **Sunnyvale - California**

6

VEHICLE EMISSION CONTROL LABEL

432.1.C03.1D

ENGINE DISPLACEMENT: **955 cc**
ENGINE FAMILY: **RDUCC0.96SFT**
THIS VEHICLE CONFORMS TO U.S. EPA AND CALIFORNIA REGULATIONS APPLICABLE TO 2024 MODEL YEAR NEW MOTORCYCLES EVAP FAMILY: RDUCU0015PV1

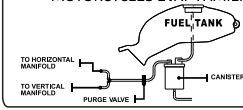

DUCATI
Via Cavalieri Ducati, 3
40132 BOLOGNA
ITALY

4

MOTORCYCLE NOISE EMISSION CONTROL INFORMATION

THIS **2024 DUC4690955** MOTORCYCLE **ZDMFAKYW9RB000001**
MEETS EPA NOISE EMISSION REQUIREMENTS OF **80** dB(A) AT **5193** RPM
BY THE FEDERAL TEST PROCEDURE.MODIFICATIONS WHICH CAUSE THIS
MOTORCYCLETO EXCEED FEDERAL NOISE STANDARDS ARE PROHIBITED
BY FEDERAL LAW. SEE OWNER'S MANUAL

432.1.C03.1A

5

Fig 25

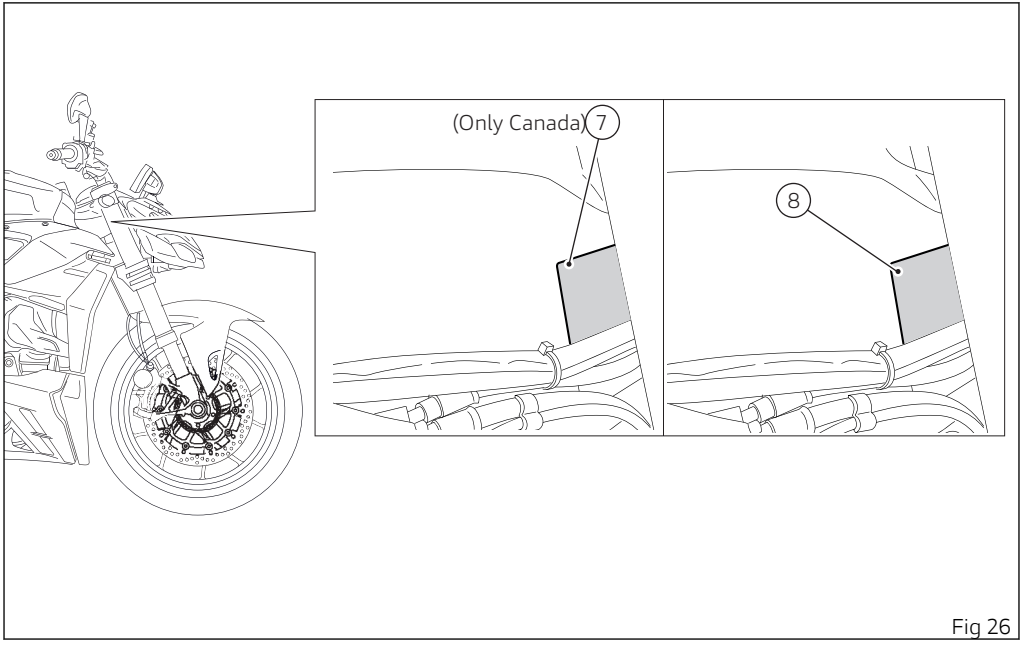

Fig 26

MANUFACTURED BY/FABRIQUÉ PAR : **DUCATI**MOTORHOLDING spa
TYPE OF VEHICLE / TYPE DE VÉHICULE : **MC** DATE: **06/2023**
GVWR / PNBV: **425 KG** V.I.N. / N.I.V.: **ZDMFAKYW9RB000001**

GAWR PNBE KG	DIMENSION		COLD INFLATION PRESSURE - PRESSION DE GONFLAGE A FROID		
	TIRE/PNEU	RIM/JANTE	CONDITION	PSI-LPC	kPa
177	120/70ZR17	MT 3.50x17	Driver only: Driver and passenger:	33.4 36.3	230 250
248	180/60ZR17	MT 5.50x17	Driver only: Driver and passenger:	36.3 39.2	250 270

THIS VEHICLE CONFORMS TO ALL APPLICABLE STANDARDS PRESCRIBED UNDER THE CANADIAN MOTOR VEHICLE SAFETY REGULATIONS IN EFFECT ON THE DATE OF MANUFACTURE. CE VEHICULE EST CONFORME A' TOUTES LES NORMES QUI LUI SONT APPLICABLES EN VERTU DU REGLEMENT SUR LA SÉCURITÉ DES VÉHICULES AUTOMOBILES DU CANADA EN VIGUEUR A' LA DATE DE SA FABRICATION

432.1.C031F

7 (Only Canada)

Manufactured by: **DUCATI**MOTORHOLDING spa date: 06/2023

432.1.C031B

GVWR:937 Lbs (425 kg); GAWR FRONT: 390 Lbs (177 kg); GAWR REAR: 547 Lbs (248 kg)
WITH TIRES: FRONT 120/70ZR17 REAR 180/60ZR17
WITH RIMS: FRONT MT 3.50x17 REAR MT 5.50x17

RECOMENDED TIRE COLD INFLATION PRESSURE

DRIVER ONLY FRONT 33.4 PSI (230kPa) REAR 36.3 PSI (250kPa)
DRIVER AND PASSENGER FRONT 36.3 PSI (250kPa) REAR 39.2 PSI (270kPa)

THIS VEHICLE CONFORMS TO ALL APPLICABLE FEDERAL MOTOR VEHICLE STANDARDS IN EFFECT ON THE DATE OF MANUFACTURE SHOWN ABOVE

Vehicle I.D. No.**ZDMFAKYW9RB000001** Type Classification: MOTORCYCLE

8

Fig 27

Noise and exhaust emission control system information

Source of Emissions

The combustion process produces carbon monoxide and hydrocarbons. Control of hydrocarbons is very important because under certain conditions, they react to form photochemical smog when subjected to sunlight.
Carbon monoxide does not react in the same way, but is toxic. Ducati utilizes lean carburetor settings and other systems to reduce carbon monoxide and hydrocarbons.

Exhaust Emission Control System

Exhaust Emission Control System is controlled by an Electronic Control Unit (ECU), and no adjustments should be made except idle speed adjustments with the throttle stop screw. The Exhaust Emission Control System is separate from the crankcase emission control system.

Crankcase Emission Control System

The engine is equipped with a closed crankcase system to prevent discharging crankcase emissions into the atmosphere. Blow-by gas is returned to the combustion chamber through the air cleaner and the throttle body.

Evaporative Emission Control System

The motorcycles are equipped with an evaporative emission control system which consists of a charcoal canister and associated piping. This system prevents the escape of fuel vapors from the engine and fuel tank.

Problems that may affect motorcycle emissions

If you are aware of any of the following symptoms, have the vehicle inspected and repaired by your local Ducati dealer.
Symptoms:
Hard starting or stalling after starting.
Rough idle.
Misfiring or backfiring during acceleration.
After-burning (backfiring).
Poor performance (driveability) and poor economy.

California emission control warranty statement Your warranty rights and obligations

Your warranty rights and obligations

The California Air Resources Board is pleased to explain the emission control system warranty on your MY 2024 motorcycle. In California, new motor vehicles must be designated, built and equipped to meet the State's stringent anti-smog standards. Ducati North America, Inc. must warrant the emission control system on your bike for the periods of time listed below provided there has been no abuse, neglect or improper maintenance of your bike.

Your emission control system may include parts such as fuel-injection system, the ignition system, catalytic converter, and engine computer. Also included may be hoses, belts, connectors and other emission-related assemblies. Where a warrantable condition exists, Ducati North America, Inc. will repair your bike at no cost to you including diagnosis, parts and labor.

Manufacturer’s warranty coverage

- 5 years or 18.641 miles (30,000 kilometers), whichever first occurs.
- If an emission-related part on your motorcycle is defective, the part will be repaired or replaced by Ducati North America. This is your emission control system DEFECT WARRANTY.

Owner's warranty responsibilities

- As the motorcycle owner, you are responsible for the performance of the required maintenance listed in your owner's manual. Ducati North America, Inc. recommends that you retain all receipts covering maintenance on your motorcycle, but Ducati North America, Inc. cannot deny warranty solely for the lack of receipts or for your failure to ensure the performance of all scheduled maintenance.
- You are responsible for presenting your motorcycle to a Ducati dealer as soon as a problem exists. The warranty repairs should be completed in a reasonable amount of time, not to exceed 30 days.
- As the motorcycle owner, you should also be aware that Ducati North America, Inc. may deny you warranty coverage if your motorcycle or a

part has failed due to abuse, neglect, improper maintenance or unapproved modifications.

If you have any questions regarding your warranty rights and responsibilities, you should contact Ducati North America, Inc. at 001.888.391.5446 or the California Air Resource Board at 9528 Telstar Avenue, El Monte, CA 91731.

California evaporation emission system

This system consists of:

1) Hot air inlet;
2) Canister;
3) To manifold;
4) Fuel tank;
5) Breather pipe;
6) Purge valve.

Attention

In the event of a fuel system malfunction, contact a Ducati Authorized Service Center.

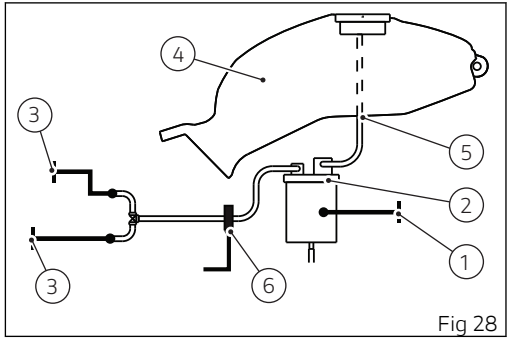

Fig 28

Ducati limited warranty on emission control system

Ducati North America, Inc.
1292 Reamwood Ave., Sunnyvale,
CA 94089 USA
Tel.: 001.888.391.5446
E-mail: customerservice@ducatiusa.com
Web site: www.ducatiusa.com
warrants that each new 1998 and later Ducati motorcycle, that includes as standard equipment a headlight, tail-light and stoplight, and is street legal:

A) is designed, built and equipped so as to conform at the time of initial retail purchase with all applicable regulations of the United States Environmental Protection Agency, and the California Air Resources Board; and
B) is free from defects in material and workmanship which cause such motorcycle to fail to conform with applicable regulations of the United States Environmental Protection Agency or the California Air Resources Board for a period of use of 18,641 miles (30,000 kilometers) or 5 (five) years from the date of initial retail delivery, whichever first occurs.
If an emission-related part on your motorcycle is defective, the part will be repaired or replaced by Ducati North America. This is your emission control system DEFECT WARRANTY.

I. Coverage
Warranty defects, and damages to other motorcycle components proximately caused by such defects, shall be remedied during customary business hours at any authorized Ducati motorcycle dealer located within the United States of America in compliance with the Clean Air Act and applicable regulations of the United States Environmental Protection Agency and the California Air Resources Board. Adjustments of factory installed and properly operating adjustment limiting devices, such as throttle body balancing (adjusted either via the air bypass screw or electronically via the Injection Control Unit) or the exhaust butterfly valve servo motor (adjusted by cables and verified electronically), are also eligible for warranty coverage.
The vehicle manufacturer shall be liable for damages to other vehicle components proximately caused by a failure under warranty of any warranted part.
Any adjustment of a component which as a factory installed, and properly operating, adjustment limiting device (such as an idle limiter cap) is eligible for warranty coverage.

Any add-on or modified part exempted by the California Air Resources Board from the prohibitions of Vehicle Code section 27156 may be used on a vehicle or engine. Such use, in and of itself, shall not be grounds for disallowing a warranty claim made in accordance with this article. The vehicle or engine manufacturer shall not be liable under this article to warrant failures of warranted parts caused by the use of an add-on or modified part.
Any part or parts replaced under this warranty shall become the property of Ducati. In the state of California only, emissions related warranted parts are specifically defined by that state's Emissions Warranty Parts List. These warranted parts are: carburetor and internal parts; intake manifold; fuel tank, fuel injection system; spark advance mechanism; crankcase breather; air cutoff valves; fuel tank cap for evaporative emission controlled vehicles; oil filler cap; pressure control valve; fuel/vapor separator; canister; igniters; breaker governors; ignition coils; ignition wires; ignition points, condensers, and spark plugs if failure occurs prior to the first scheduled replacement, and hoses, clamps, fittings and tubing used directly in these parts. Since emission related parts may vary from model to model, certain models may not contain all of these parts and certain models may contain functionally equivalent parts. In the state of California only, Emission Control System emergency repairs, as provided for in the California Administrative Code, may be performed by other than an authorized Ducati dealer. An emergency situation occurs when an authorized Ducati dealer is not reasonably available, a part is not available within 30 days, or a repair is not complete within 30 days. Any replacement part can be used in an emergency repair. Ducati will reimburse the owner for the expenses, including diagnosis, not to exceed Ducati's suggested retail price for all warranted parts replaced and labor charges based on Ducati's recommended time allowance for the warranty repair and the geographically appropriate hourly labor rate. The owner may be required to keep receipts and failed parts in order to receive compensation.

II. Limitations
This Emission Control System Warranty shall not cover any of the following:
A. Repair or replacement required as a result of
(1) accident,
(2) misuse,

(3) repairs improperly performed or replacements improperly installed,
(4) use of replacement parts or accessories not conforming to Ducati specifications which adversely affect performance and/or
(5) use in competitive racing or related events.
B. Inspections, replacement of parts and other services and adjustments that are required maintenance in the Owner's Manual. However, this limitation does not apply to required replacements of defective maintenance parts before their scheduled replacement. Also, this limitation does not apply to diagnostic or other repair costs related to detecting and investigating conditions that are ultimately determined to be covered under the Emissions Control System Warranty. Diagnostic and/or other repair costs associated with conditions determined to be covered under the Emissions Control System Warranty are provided at no cost.
C. Any motorcycle on which odometer mileage has been changed so that actual mileage cannot be readily determined.

III. Limited liability
A. The liability of Ducati under this Emission Control Systems Warranty is limited solely to the remedying of defects in material or workmanship by an authorized Ducati motorcycle dealer at its place of business during customary business hours. This warranty does not cover inconvenience or loss of use of the motorcycle or transportation of the motorcycle to or from the Ducati dealer. Ducati shall not be liable for any other expenses, loss or damage, whether direct, incidental, consequential or exemplary arising in connection with the sale or use of or inability to use the Ducati motorcycle for any purpose. Some states do not allow the exclusion or limitation of any incidental or consequential damages, so the above limitations may not apply to you. B. No express emission control system warranty is given by Ducati except as specifically set forth herein. Any emission control system warranty implied by law, including any warranty of merchantability or fitness for a particular purpose, is limited to the express emission control systems warranty terms stated in this warranty. The foregoing statements of warranty are exclusive and in lieu of all other remedies. Some states do not allow limitations on how long an implied warranty lasts so the above limitation may not apply to you. C. No dealer is authorized to modify this Ducati Limited Emission Control Systems Warranty.

IV. Legal rights
This warranty gives you specific legal rights, and you may also have other rights which vary from state to state.

V. This warranty is in addition to the Ducati limited motorcycle warranty.

VI. Additional information
Any replacement part that is equivalent in performance and durability may be used in the performance of any maintenance or repairs. However, Ducati is not liable for these parts. The owner is responsible for the performance of all required maintenance. Such maintenance may be performed at a service establishment or by any individual. The warranty period begins on the date the motorcycle is delivered to an ultimate purchaser.

Ducati North America, Inc.
1292 Reamwood Ave., Sunnyvale,
CA 94089 USA
Tel.: 001.888.391.5446
E-mail: customerservice@ducatiusa.com
Web site: www.ducatiusa.com

Main components and devices

Position on the vehicle

1) Tank filler plug.
2) Seat lock.
3) Side stand.
4) Rear-view mirrors.
5) Front fork adjusters.
6) Rear shock absorber adjusters.
7) Catalytic converter (both sides).
8) Exhaust muffler (both sides).

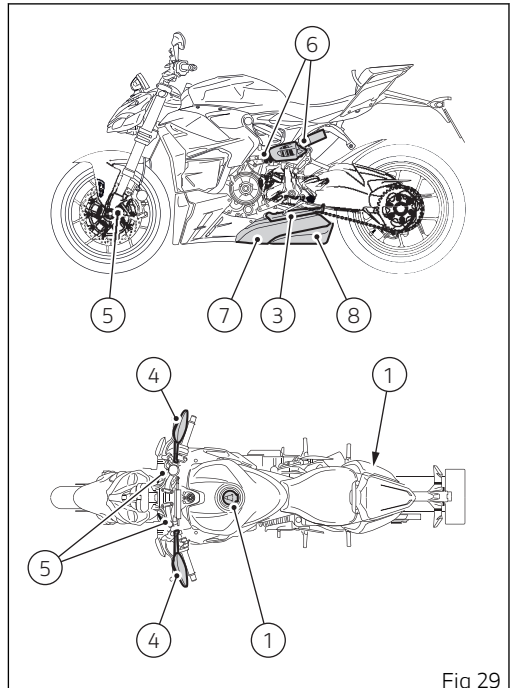

Fig 29

Fuel tank plug

Opening

- Lift flap (1) and insert the key in the lock;
- Turn the key clockwise by 1/4 of a turn to release the lock;
- Lift the fuel tank plug (2).

Closing

- Close the plug (2) with the key inserted and press it into its seat.
- Remove the key and replace the lock cover (1).

Note
The plug can only be closed with the key in.

Attention
Always make sure you have properly refitted and closed the plug after refueling.

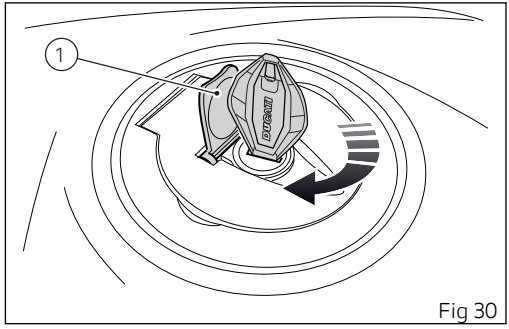

Fig 30

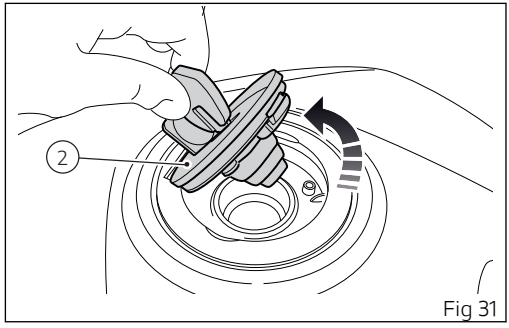

Fig 31

Seat lock

Use lock (1) to remove the passenger seat (2) and reach the tail guard compartment.

Removing the passenger seat

- Insert the key into the lock (1);
- Turn the key counter clockwise until the passenger seat (2) catch disengages with an audible click;
- Pull the passenger seat (2) towards the front end of the vehicle until releasing it.

Refitting the passenger seat

- Before refitting the passenger seat (2), make sure that passenger strap (3) is correctly positioned.
- Slide the passenger seat (2) from vehicle front (A) end towards the rear end (B) until hearing the catch click into place.

Attention

To close the seat cover insert it from the motorcycle side and slide it towards the rear side until hearing the engagement click.

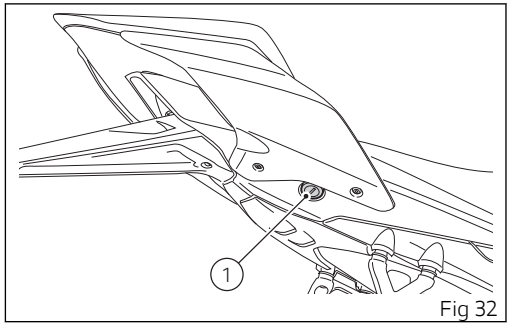

Fig 32

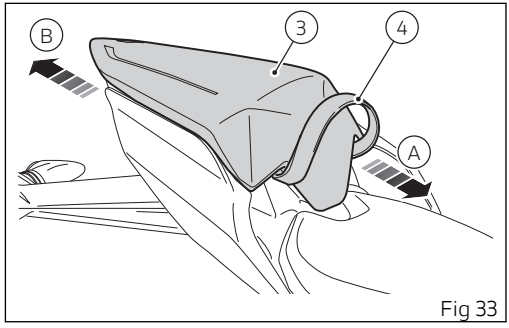

Fig 33

Removing the rider seat

- Using the Allen wrench present in the tail guard compartment, loosen the two screws (4) on both sides of the rider seat (5);
- Slide the seat towards the rear end of the vehicle.

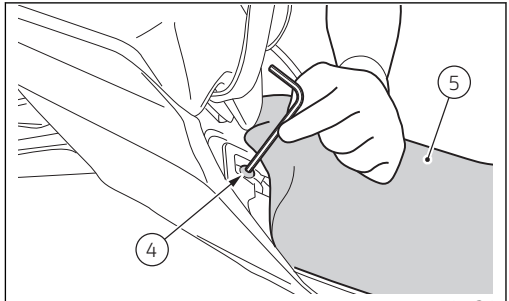

Fig 34

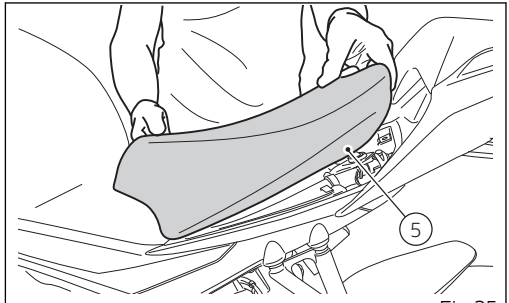

Fig 35

Refitting the rider seat

- Refit the rider seat (5) by resting the front of it on the lower edge of the tank and moving it backwards until the pad (C) locks into place between the brackets (D).
- Check that the holes for fixing the seat are correctly aligned.
- Lift the rear edges of the seat (5) and, by checking the hole alignment, fasten it by tightening screws (4) (Fig 34).
- Check proper rider seat (5) fastening by trying to raise its front end.

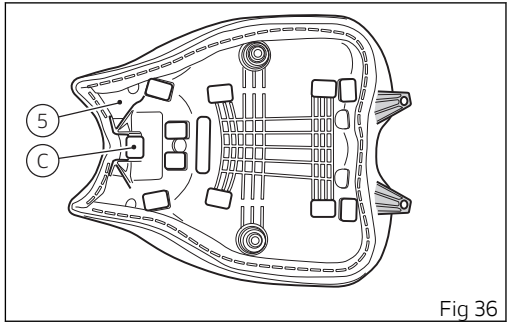

Fig 36

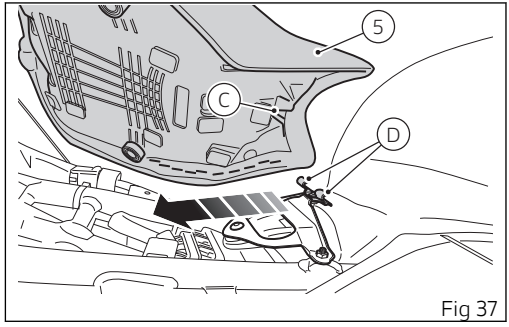

Fig 37

With the seats removed, the connector (6) for the battery maintainer is accessible. To use it, slide it out and connect it to maintainer (7), as described in chapter “Maintaining the battery charge”.

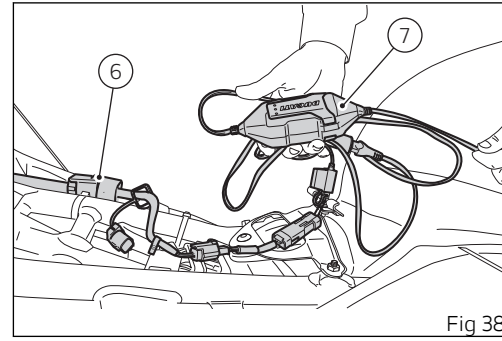

Fig 38

Battery charge maintaining

Your motorcycle is equipped with a connector (1), located under the rider's seat, to which you can connect a special battery charger (2) (battery maintenance kit part no. 69928471A (Europe), part no. 69928471AW (Japan), 69928471AX (Australia), 69928471AY (UK), 69928471AZ (USA), available from our sales network).

Remove the connector (1) and connect it to the maintainer (2).

Note

The electric system of this model is designed so as to ensure there is a very low power drain when the motorcycle is off. Nevertheless, the battery features a certain self-discharge rate that is normal and depends on ambient conditions as well as on "non-use" time.

Important

If battery minimum voltage is not ensured by a suitable battery charge maintainer, sulfation may occur. This is irreversible and will lead to decreasing battery performance.

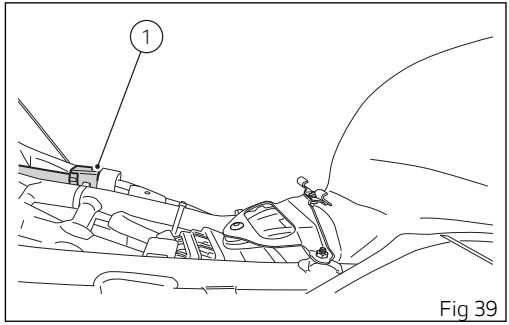

Fig 39

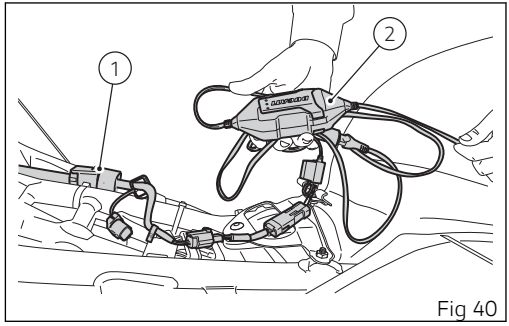

Fig 40

When the motorcycle is left unused (approximately for more than 30 days). We recommend owners to use the Ducati battery charge maintainer (Battery maintenance kit) since its electronics monitors the battery voltage and features a maximum charge current of 1.5 Ah. Connect the battery maintainer to the diagnostic socket.

Note

Using charge maintainers not approved by Ducati could damage the electric system; vehicle warranty does not cover the battery if damaged due to failure to comply with the above indications, since it is considered incorrect maintenance.

Attention

NEVER connect the battery in parallel with that of other vehicles, as this may cause a short circuit or overheating of the battery.

Side stand

Attention

The position of the side stand is identified on the instrument panel by the warning light. When the warning light is on, the side stand is lowered (and the engine start is inhibited).

Important

Use the side stand to support the motorcycle only during short stops. Before lowering the side stand, make sure that the supporting surface is hard and flat.

Do not park on soft or pebbled ground or on asphalt melted by the sun, etc. or else the bike may fall over. When parking downhill, always position the bike with the rear wheel facing downhill.

To pull down the side stand, hold the bike handlebars with both hands and push down on the side stand (1) with your foot until it is fully extended.
Tilt the bike until the side stand is resting on the ground.

To easily find the side stand during the opening phase, press on pin (3) with your foot.

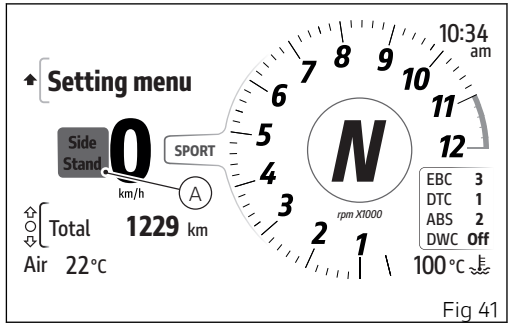

Fig 41

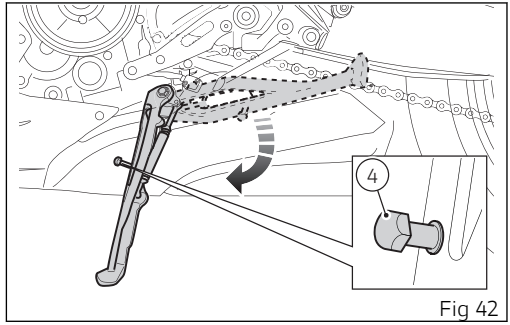

Fig 42

Attention

When using the bike on the track, we recommend removing the pin (3) by working on the key (4).

To move the side stand to its resting position (horizontal position), lean the bike to the right while lifting the thrust arm (1) with your foot.
To ensure trouble-free operation of the side stand joint, thoroughly clean it and then use SHELL Alvania R3 grease to lubricate all friction points.

Attention

Do not sit on the motorcycle when it is supported on the side stand.

Note

Check for proper operation of the stand mechanism (two springs, one into the other) and the safety sensor (2) at regular intervals.

Note

The engine can be started with the side stand down and the gearbox in neutral. If starting with a gear engaged, pull in the clutch lever (in this case the side stand must be up).

Bluetooth control unit

The motorcycle can be equipped with a Bluetooth control unit that works as a hub between the various supported electronic devices relying on a Bluetooth communication interface.
The Bluetooth control unit, which is not installed in this vehicle, can be purchased at a Ducati Dealer or Authorized Service Center.

Attention

Smartphone and Bluetooth Headset device manufacturers may incorporate certain changes within the standard protocols over the course of the lifecycle of the device (Smartphones and Earphones).

Attention

These changes are outside the control of Ducati and may result in Bluetooth Headset devices functionality becoming impaired (sharing Music, multimedia player, etc.) and may equally affect some types of Smartphones (depending on supported Bluetooth profiles). This is why Ducati cannot guarantee multimedia player proper operation for:

- any earphones not coming with the "Ducati Kit part no. 981029498";
- any Smartphones not supporting the required Bluetooth profiles (even though paired to earphones coming with the "Ducati Kit part no. 981029498").

Attention

In case of interference or noise due to particular conditions of the external environment, the Ducati earphone kit no. 981029498 also allows sharing the music being played directly from rider helmet to passenger helmet (for further details please refer to the manual of the earphones coming with the Ducati kit part no. 981029498).

Note

The Ducati kit no. 981029498 can be purchased separately at a Ducati Dealer or Authorized Service Center.

Check that your Smartphone supports the following profiles:

- MAP profile: for a correct display of SMS and MMS notifications;
- PBAP profile: for a correct display of the Smartphone contact list.

Attention

Ducati does not ensure a correct connection to the Ducati Multimedia System of Bluetooth navigators that are not provided in the following kits:

- Kit of Ducati Zumo satellite navigator 350
- Kit of Ducati Zumo satellite navigator 390
- Kit of Ducati Zumo satellite navigator 395

Note

The Ducati kits mentioned above can be purchased separately at a Ducati Dealer or Authorized Service Center.

Steering damper

The steering damper (1) is located behind the handlebar and is secured to the steering head and frame.
It provides stable and accurate steering, improving the bike's handling response under any conditions.

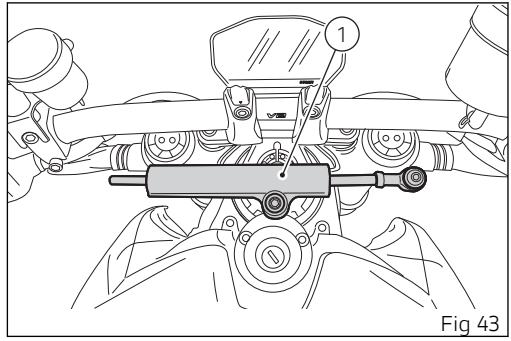

Fig 43

Front fork adjustment

The front fork used on this bike has rebound, compression and spring preload adjustment.
Use the external screw adjusters to make adjustments.

1) To adjust the rebound damping (1);
2) to adjust the compression damping (2);
3) for inner spring preload adjustment (3).

Position the bike on its side stand so that it is stable.
Turn the adjuster (1) at the top end of each fork leg with a flat screwdriver to adjust rebound damping.
Turn the adjuster (2) at the top end of each fork leg with a flat screwdriver to adjust compression damping.
The stiffest damping setting is obtained with the adjuster turned fully clockwise to the "0" (fully closed) position.

To change preload of the spring inside each fork leg, counter clockwise the hex. adjuster (3), with a hexagon wrench, starting from the fully open (counter clockwise) position.

Standard setting:

- compression: - 6.5 turns from fully closed;
- rebound: - 5.5 turns from fully closed;

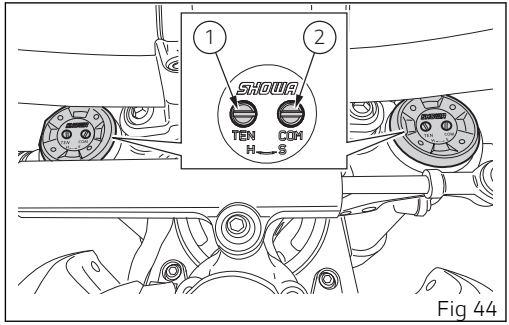

Fig 44

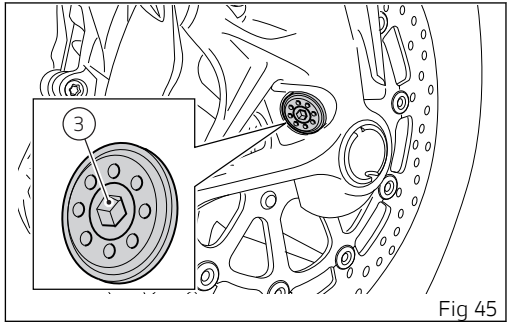

Fig 45

- spring preload: +7 turns from fully open.

Recommended setting for racing use:

- compression: -3 turns from fully closed;
- rebound: -2 turns from fully closed;
- spring preload: +11 turns from fully open.

Attention

Regulate the adjusters on both legs to the same positions.

Adjusting the rear shock absorber

The rear shock absorber has commands that enable you to adjust the setting to suit the load on the bike.

Attention

The shock absorber is filled with gas under pressure and may cause severe damage if taken apart by someone who is unskilled.

When carrying a passenger and luggage, set the rear shock absorber spring to proper preload to improve bike handling and to keep safe clearance from the ground (turn ring nuts to set spring preload). You may find that rebound damping needs adjusting as well.
The shock absorber is adjusted by electric impulses sent by the instrument panel to the adjusters inside the shock absorber body.

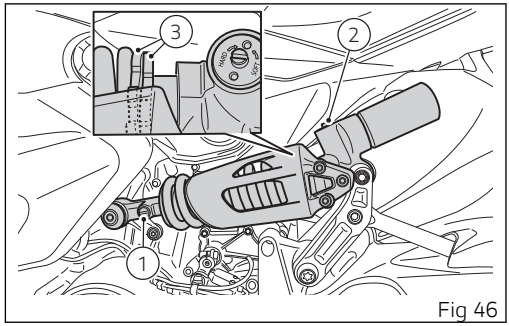

Fig 46

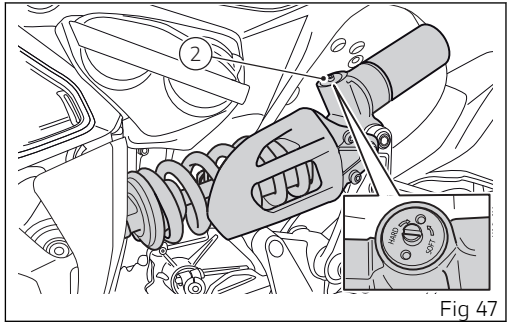

Fig 47

The rear shock absorber has commands that enable you to adjust the setting to suit the load on the bike.
The adjuster (1) located on the front connection holding the shock absorber to the crankcase adjusts the rebound damping.
The adjuster (2) located on the expansion reservoir of the shock absorber adjusts the compression damping.
The ring nuts (3) allow adjusting the shock absorber external spring preload.
To adjust the spring preload, loosen the top ring nut. SCREWING or UNSCREWING the bottom ring nut will INCREASE or DECREASE the preload.
Once the spring preload is set, tighten the top ring nut.
Completely turn adjusters (1) and (2) clockwise to obtain the fully closed condition.

Standard setting:

- rebound (1): -14 clicks from fully closed;
- compression (2): -1.5 turns from fully closed;
- spring preload: 0.59 in (15 mm).

Recommended setting for racing use:

- rebound (1): -7 clicks from fully closed;
- compression (2): -0.5 turns from fully closed;
- spring preload: 0.71 in (18 mm).

Attention

The shock absorber is filled with gas under pressure and may cause severe damage if taken apart by someone who is unskilled.

If you intend to transport a passenger and baggage, preload the shock absorber spring to the maximum to improve the dynamic performance of the bike and to avoid possible interference with ground. You may find that rebound damping needs adjusting as well.
The setting of the vehicle when it is put on the market (standard settings indicated in the previous paragraphs) corresponds to a setting suitable to all use conditions (riding situations, rider's skills and needs), to obtain the best solution for a sport use on the road.

Controls

Position of motorcycle controls

Attention

This section shows the position and function of the controls used to ride the motorcycle. Be sure to read this information carefully before you use the controls.

1) Instrument panel.
2) Key-operated ignition switch and steering lock.
3) LH switch.
4) Clutch lever.
5) RH switch.
6) Throttle twistgrip.
7) Front brake lever.
8) Rear brake pedal.
9) Gear change pedal.

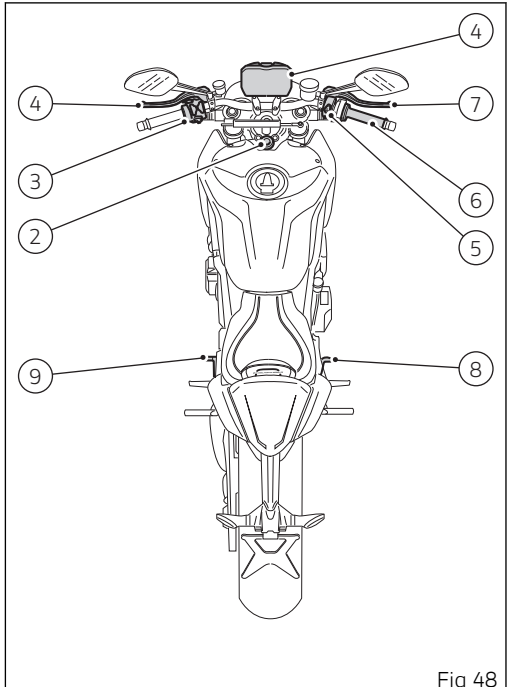

Fig 48

Switchgears

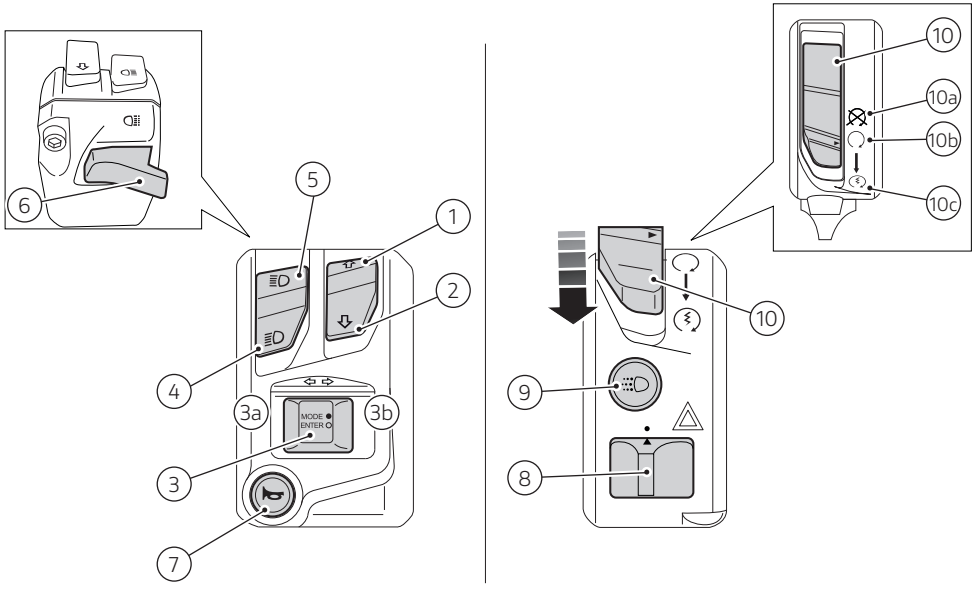

Fig 49

1	⇧	Control button up.
2	⇩	Control button down.
3	MODE ● ENTER ○ ⇦⇨	Riding Mode change button, ENTER function button and turn indicator three-position switch: ● position (3a), left turn indicator; ● center position, OFF; ● position (3b), right turn indicator.
4		Low beam.
5		High beam.
6		High-beam flasher and “Start/Stop Lap” function.
7		Horn.
8		Hazard lights (red).
9		DRL (if present).
10		2-position switch (red).
10a		Engine start, pushed down.
10b		Engine stop.

Light control

Low / High beam

By means of button (A) it is possible to switch from low beam to high beam and vice versa: position (B) for high beam, position (C) for low beam. To flash, press button (D).
If engine is not started after turning the key to on, it is nevertheless possible to switch on the lights or flash.
If within 60 seconds from the manual switching on of the low or high beam the engine is not started, the lights are turned off.

To preserve the bike battery, the headlight is automatically switched off when starting the engine and it is then switched on again when the engine has started.

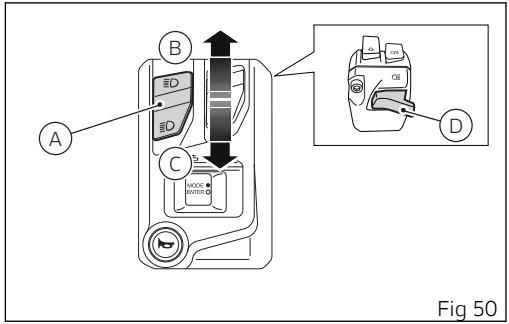

Fig 50

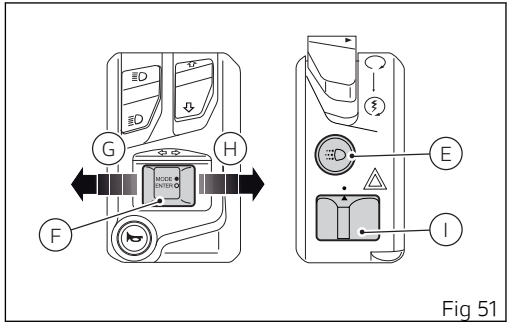

Fig 51

DRL in "Auto" mode – only for version with DRL lights

If the DRL was set to "Auto" via the "DRL" function within “Setting menu” (page 161), the instrument panel automatically manages the DRL and the low beam according to detected ambient light:

- if the instrument panel detects good light conditions (day) the DRL is turned on and the low beam is turned off;
- if the instrument panel detects poor light conditions (night) the DRL is turned off and the low beam is turned on.

When the DRL is set to “Auto” mode, the corresponding warning light (L, Fig 52)will turn on.
If the DRL was set to "Auto" mode, press button (E, Fig 51) to disable that mode and set manual light management. Press again button (E, Fig 51) to re-enable DRL but with control strategy set to "Manual".
In this case, upon next Key-On, DRL will be again set to "Auto" mode.

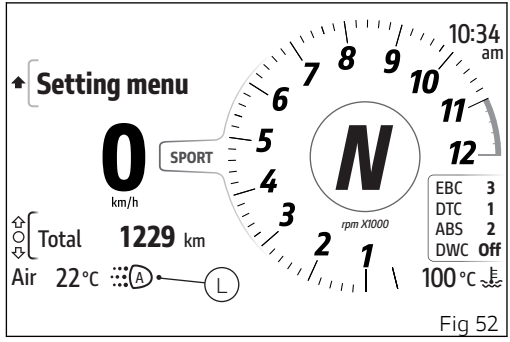

Fig 52

Attention
Using the DRL light in "Auto" mode in case of poor light conditions, especially in case of fog or clouds, could impair safety. In this case Ducati recommends to manually activate the low beam.

DRL in "Manual" mode – only for version with DRL lights

If the Daytime Running Lights are in this mode, as set through the "DRL" function within the “Setting

menu" (page 161), DRL will not change status upon key-on.
To switch on or off the DRL lights, it is necessary to press button (E, Fig 51).

Attention
Using the DRL lights in poor light conditions (dark) could compromise the riding visibility and dazzle anyone coming on the opposite lane.

Note
Using the DRL lights during the day improves visibility compared to low beam.

Turn indicators

Using the "Turn indicators" function in the "Setting menu" (page 178), you can set the control of the turn indicators to automatic or manual mode.
To activate the left turn indicator, press button (F, Fig 51) in position (G, Fig 51); to activate the right turn indicator, press button in position (H, Fig 51).
To switch off the turn indicators, set the button (F, Fig 51) to its center position.

Automatic switch-off:
The turn indicators switch off automatically after the turn, as calculated based on vehicle speed, lean angle and in general according to the analysis of vehicle dynamic conditions.
This means that automatic switch-off is triggered when vehicle speed exceeds 12.4 mph (20 km/h) after the turn indicator button was pressed.
Turn indicators also switch off automatically if they remained on for a long mileage, which can range between 656-6562 feet (200 and 2000 meters), depending on vehicle speed when the turn indicator button was pressed.
If the turn indicator switch is again operated, while turn indicator is still on, automatic switch-off feature is re-initialized.

Attention
The automatic disabling systems are assistance systems available for the riders to control the turn indicators in the best possible way. These systems have been developed to work in most of the riding maneuvers. Despite this, riders must always pay attention to the operation of the turn indicators (by disabling or enabling them manually if necessary).

Hazard lights

To activate or deactivate the hazard lights, press button (I, Fig 51) only when the vehicle is in key-on condition.
When turning the vehicle key OFF with hazard lights active, they will remain active for 2 hours. After 2 hours, the hazard lights switch OFF automatically in order to save battery charge.

Note
When turning the vehicle key ON with hazard lights still active, they will remain active.

Note
If there is a sudden interruption in the battery while the function is active, the instrument panel will disable the function when the voltage is restored.

Note
The hazard lights have a higher priority than the normal operation of the individual turn indicators.

Note
Emergency braking
In the event of heavy braking from a speed of more than55 km/h the tail light flashes rapidly in order to warn the vehicles behind. When deceleration is reduced below a predefined threshold, the flashing is automatically deactivated.

Parking function

Each time the key is turned off, it is possible to activate the parking lights by holding button (F, Fig 51) for a long time in the left turn indicator position (G, Fig 51).
Maximum time for activating the parking lights from key-off is 20 seconds.

Keys

The motorcycle comes with 2 keys.
These keys contain the "immobilizer system code".
The keys are those for the standard use, i.e. to:

- start up the engine;
- open the fuel tank filler plug;
- open the seat lock.

Attention

Separate the keys and use only one of the two to ride the bike.

Duplicate keys

If you need any duplicate keys, contact the Ducati Service network with all the keys you have left. The Ducati Service Center will program all the new keys as well as any keys you already have. You may be asked to provide proof that you are the legitimate owner of the bike. The codes of any keys not submitted will be wiped off from the memory to make those keys unserviceable in case they have been lost.

Note

If you sell your motorcycle, do not forget to give all keys to the new owner.

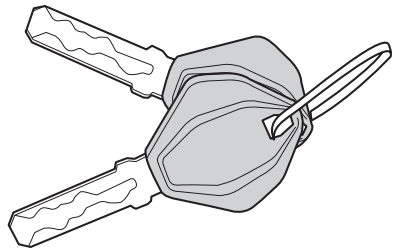

Fig 53

Immobilizer system

For improved anti-theft protection, the motorcycle is equipped with an IMMOBILIZER, an electronic system that inhibits engine operation whenever the ignition switch is turned off.
Housed in the handgrip of each ignition key is an electronic device that modulates an output signal. When the ignition is turned on this signal is generated by a special antenna incorporated in the switch and changes every time.
The modulated signal represents the "password" (which is changed at each start-up) by which the ECU

recognizes the ignition key. The ECU will only allow the engine to start if it recognizes this password.

Ignition switch and steering lock

It is located in front of the fuel tank and has three positions:

A) ON: enables lights and engine operation;
B) OFF: disables lights and engine operation;
C) LOCK: the steering is locked:

Attention

To move the key to the last position, press it down before turning it. The key can be removed in positions (B) and (C).

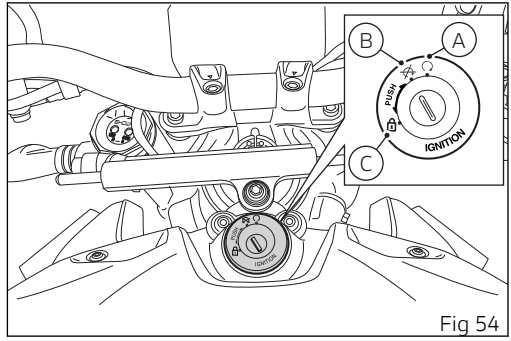

Fig 54

Restoring motorcycle operation via the PIN code

In case of key acknowledgment system or key malfunction, the instrument panel allows the user to enter his/her own PIN code to temporarily restore vehicle operation.
if the Pin Code function is active, the instrument panel displays “Insert Pin” with four spaces allowing the rider to enter digits of the Pin code to be entered: “0” and “- - -”.

Entering the code:

- use UP and DOWN buttons to increase and decrease by 1 the value from “0” to “9”;
- press ENTER button to confirm the digit and move on to the following digit;
- repeat the procedure until entering all 4 digits.

Once the fourth digit is set, press ENTER and the instrument panel behavior will be as follows:

- if there is a problem during the pin check, the instrument panel displays “Error” for 2 seconds and then passes to the standard screen.
- if the pin code is not correct, the instrument panel displays “Wrong” for 2 seconds and then goes back to previous screen, to allow you to try again.
- if the pin code is correct, the instrument panel shows "Correct" for 2 seconds, and then displays the standard screen.

Fig 55

Important

If this procedure is necessary in order to start the motorcycle, contact an Authorized Ducati Service Center as soon as possible to fix the problem.

Clutch lever

Lever (1) disengages the clutch. It features a dial adjuster (2) for lever distance from the twistgrip on handlebar.

The lever distance can be adjusted through 9 clicks of the dial (2).
Turn clockwise to increase lever distance from the handgrip.
Turn the adjuster counterclockwise to decrease lever distance.
When the clutch lever (1) is operated, drive from the engine to the gearbox and the drive wheel is disengaged.
Using the clutch properly is essential to smooth riding, especially when moving off.

Attention

Set clutch lever when motorcycle is stopped.

Important

Using the clutch properly will avoid damage to transmission parts and spare the engine.

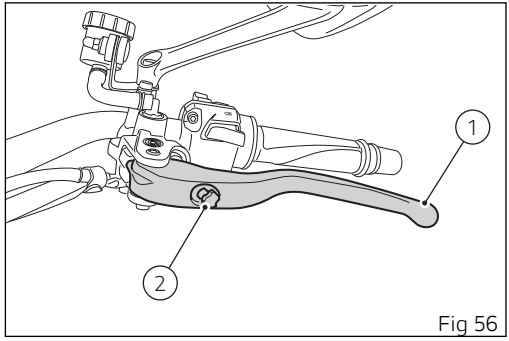

Fig 56

Note

The engine can be started with the side stand down and the gearbox in neutral. If starting with a gear engaged, pull in the clutch lever (in this case the side stand must be up before engaging the gear).

Throttle twistgrip

The twistgrip (1) on the right handlebar opens the throttles.
When released, it will spring back to the initial position (idling speed).

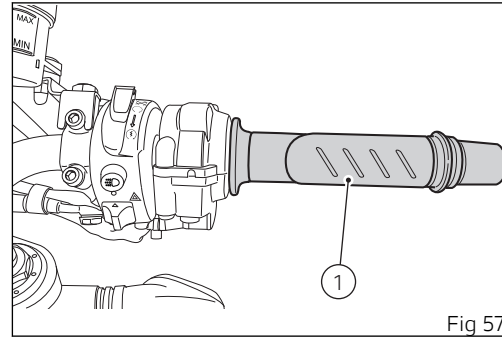

Fig 57

Front brake lever

Setting

Pull in the lever (1) towards the twistgrip to operate the front brake. The system is hydraulically operated and you just need to pull the lever gently.
The control lever (1) features a dial adjuster (2) for lever distance from the twistgrip on handlebar adjustment.
The lever distance can be adjusted through 9 clicks of the dial (2). Turn clockwise to increase lever distance from the twistgrip. Turn the adjuster counterclockwise to decrease lever distance.

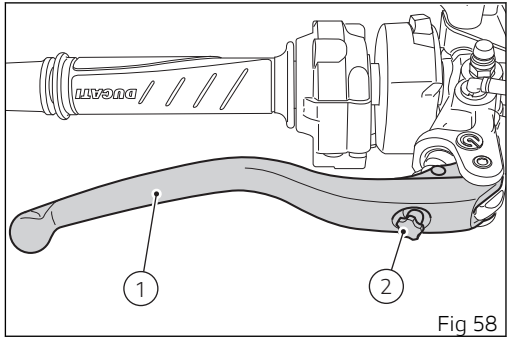

Fig 58

Attention

Before using these controls, thoroughly read instructions under paragraph "Moving off".

Attention

Set front brake lever when motorcycle is stopped.

Rear brake pedal

Push down the pedal (1) to operate the rear brake. The system is hydraulically operated.

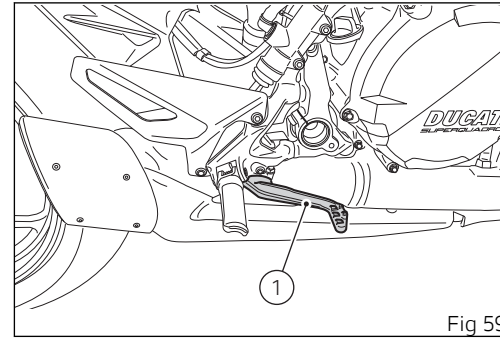

Fig 59

Gear change pedal

When released, the gear change pedal (1) automatically returns to rest position N in the center. This is indicated by the instrument panel light N coming on.

The pedal can be moved:

- down = press down the pedal to engage the 1st gear and to shift down. The N light will go out;
- up = lift the pedal to engage 2nd gear and then 3rd, 4th, 5th and 6th gears.

Each time you move the pedal you will engage the next gear.

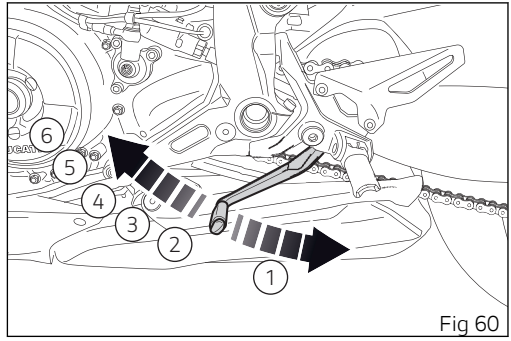

Fig 60

Adjusting the gear change pedal and the rear brake

The position of the gearchange (1) and rear brake (2) pedals in relation to the footrests can be adjusted to suit the requirements of the rider.
Have the gear change pedal and rear brake pedal adjusted at a Ducati Dealer or authorized Service Center.

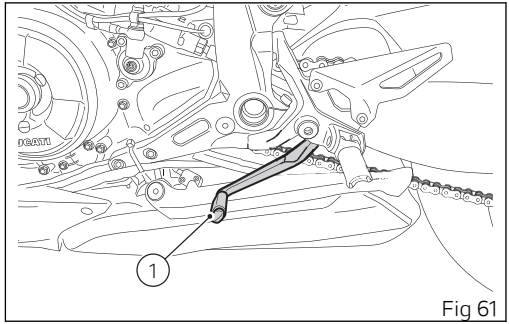

Fig 61

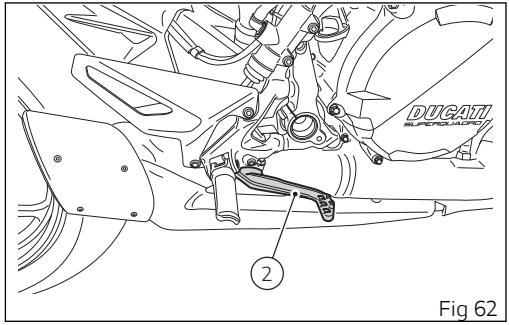

Fig 62

Riding the motorcycle

Motorcycle running-in period

During the running-in period, do not exceed the rpm indicated in the table below:

Maximum engine rpm not to be exceeded for the first period of use	
Up to 621 mi (1000 km)	6,000 rpm

Running-in recommendations:

- During the first few hours of riding, it is advisable to vary the load and engine speed continuously when the engine is warm, while remaining within the limit indicated in the table.
- Don't let the engine overstrain, always downshift one gear before the engine races.
- Do not run the engine at high rpm for a long time, particularly when riding uphill; shifting up a gear reduces fuel consumption and noise.
- Avoid riding at constant speed, either slow or fast, for a long period of time.
- Do not ride at full throttle, especially when the engine is cold.
- Avoid starting at full throttle and rapid acceleration.
- Avoid abrupt and prolonged braking, brake carefully.
- Check the drive chain frequently. Lubricate as required.

Important

Before using the motorcycle, make sure that there are no labels on the rear-view mirrors; remove, if any.

Pre-ride checks

Attention

Failure to carry out these checks before riding may lead to motorcycle damage and injury to rider.

Before riding, perform a thorough check-up on your bike as follows:

- FUEL LEVEL IN THE TANK
  Check the fuel level in the tank. Refuel, if necessary (see “Refueling”).
- ENGINE OIL LEVEL
  Check the level in the sump through the sight glass; top-up if necessary (see “Checking the engine oil level”).
- BRAKE AND CLUTCH FLUID
  Check liquid level in the corresponding reservoirs (see "Checking brake and clutch fluid level").
- COOLANT
  Check the level of coolant in the expansion reservoir; top up if necessary (see "Checking and topping up the coolant level").
- TIRE CONDITION
  Check tire pressure and condition (see “Tubeless Tires”).
- CONTROLS
  Work the brake, clutch, throttle and gear change controls (levers, pedals and twistgrip) and check for proper operation.
- LIGHTS AND INDICATORS
  Make sure lights, indicators and horn work properly. Replace any burnt-out bulbs (see “Replacing headlight light bulbs”).
- KEY LOCKS
  Check the tightening of the filler plug (see “Filler plug”).
- STAND
  Make sure side stand operates smoothly and is in the correct position (see "Side stand").

Attention

In case of malfunction, do not ride the motorcycle and contact a Ducati Dealer or Authorized Service Center.

To ensure trouble-free operation, the engine coolant pump requires a breather. This means that it is possible that a very small quantity of coolant oozes out of the breather hole positioned on the upper part of the crankcase, and this will not affect proper operation of the engine or the cooling system.

ABS light

After Key-On, the ABS light (9) stays on.
When the motorcycle speed exceeds 5 km/h, the warning light switches OFF to confirm the correct operation of the ABS system.

Attention
In case of malfunction, do not ride the motorcycle and contact a Ducati Dealer or Authorized Service Center.

ABS

Check that the front (1) and rear (2) phonic wheels are clean.

Attention
Clogged reading slots would compromise system proper operation.

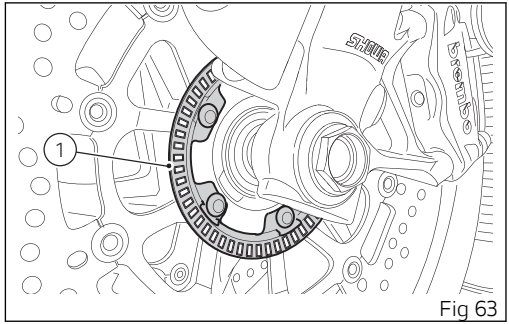

Fig 63

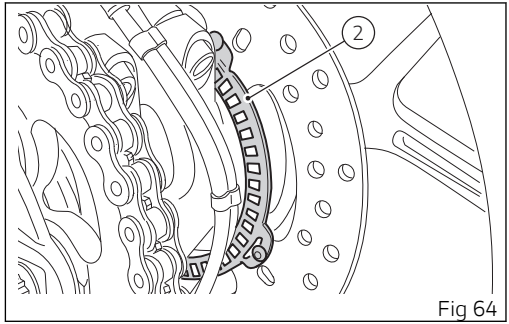

Fig 64

Engine start/stop

Attention

Before starting the engine, become familiar with the controls you will need to use when riding.

Attention

Never start or run the engine indoors. Exhaust gases are poisonous and may lead to loss of consciousness or even death within a short time.

Switching

Turn the key to (A) ⟲ .
Make sure both the green light N (1) and the red light (2) on the instrument panel come on.

Important

The oil pressure light should go out a few seconds after the engine has started.

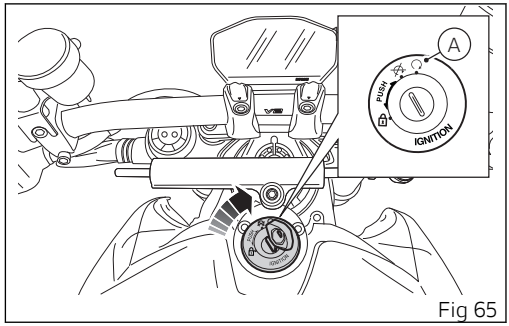

Fig 65

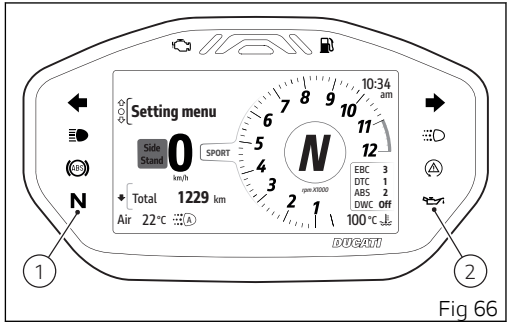

Fig 66

Attention

The side stand must be fully up (in a horizontal position), as its safety sensor prevents engine start when down.

Note

The engine can be started with side stand down and the gearbox in neutral. When starting the bike with a gear engaged, pull the clutch lever (in this case the side stand must be up).

Make sure that emergency start/stop switch (3), is set to (B) .
Move the switch (3) to the bottom (C) and release it.
Let the bike start without operating the throttle control.

Note

If the battery is flat, system automatically inhibits starter motor cranking operation.

Important

Do not rev up the engine when it is cold. Allow some time for oil to be heated and reach all points that need lubricating.

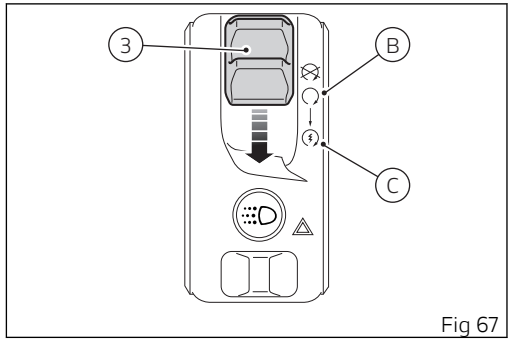

Fig 67

Attention

When the engine is cold, start immediately after starting the engine to ensure a gradual and uniform warm-up of all the components of both the engine and the vehicle. At this stage, limit the engine speed until normal engine operating temperature is reached.
In any case, never leave the engine running with the vehicle stationary, except during normal riding. Leaving the engine running while stationary for a long time can lead to overheating and damage and/or fire to the vehicle and everything in its vicinity. For the same reason, do not increase engine speed unnecessarily while the vehicle is stationary or even in motion when the gearbox is in neutral or the clutch is pulled.

Switching off

Move the switch (3) upwards to (D) .

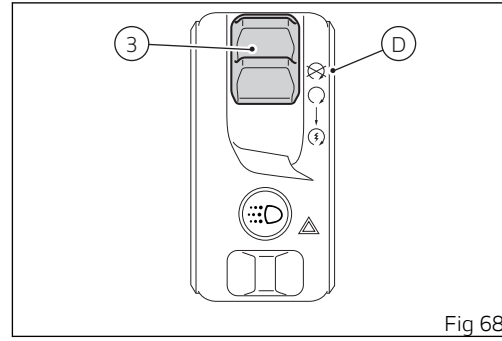

Fig 68

Moving off

1) Lift the side stand until it is horizontal.
2) Disengage the clutch by squeezing the clutch lever.
3) Push down the gear change lever firmly with the tip of your foot to engage first gear.
4) Raise the engine revs by turning the throttle twistgrip while gradually releasing the clutch lever. The motorcycle will start moving off.
5) Release the clutch lever completely and accelerate.
6) To shift up, close the throttle to slow down the engine, disengage the clutch, lift the gear change lever and let go the clutch lever. To shift down, proceed as follows: release the twistgrip, pull the clutch lever, shortly speed up to help gears synchronize, shift down (engage next lower gear) and release the clutch.

The controls should be used correctly and with promptness. When riding uphill do not hesitate to shift down as soon as the motorcycle tends to slow down. This will avoid undue stress on the engine and motorcycle.

Attention

Avoid harsh accelerations, as this may lead to misfiring and transmission snatching. The clutch lever should not be pulled longer than necessary after gear is engaged or else friction parts may overheat and wear out.

Attention

Prolonged wheelies could deactivate the ABS system.

Braking

Braking

Slow down in time, shift down to engine-brake first and then brake applying both brakes.

Using the brakes correctly under adverse conditions is the hardest – and yet the most critical - skill to master for a rider. Braking is one of the most difficult and dangerous moments when riding a two-wheeled vehicle: the possibility of falling or having an accident during braking is statistically higher than at any other moment. A locked front wheel leads to loss of traction and stability, resulting in loss of control.
The Anti-lock Brake System (ABS) has been developed to enable riders to use the vehicle's braking force to the fullest during emergency braking, adverse weather conditions or when pavement is compromised.
ABS uses hydraulics and electronics to limit pressure in the brake circuit when a special sensor mounted to the wheel signals the electronic control unit that the wheel is about to lock up.
This avoids wheel lockup and preserves traction. Pressure is raised back up immediately and the control unit keeps controlling the brake until the risk of a lockup disappears. Normally, the rider will perceive ABS operation as a harder feel or a pulsation of the brake lever and pedal.
The front and rear brakes use separate control systems, meaning that they operate independently. Likewise, the ABS is not an integral braking system and does not control both the front and rear brake at the same time.

Stop

Reduce speed, shift down and release the throttle twistgrip. Shift down to engage first gear and then neutral.
Do not release the clutch with a gear engaged to prevent the engine from suddenly stopping.
Apply the brakes and bring the bike to a complete stop.
To switch the engine off, simply turn the key to OFF (“Ignition switch and steering lock”).

Parking

Park the stopped bike on the side stand. To prevent theft, turn the handlebar fully left and turn the ignition key to the LOCK position.
If you park in a garage or other indoor area, make sure that there is proper ventilation and that the bike is not near a source of heat.

Important

Never leave the ignition key in the switch when you are leaving your bike unattended.

Attention

The engine, exhaust pipes and mufflers stay hot for a long time after the engine has been turned off. Be especially careful not to touch the exhaust system with any part of the body and never park the motorcycle near flammable materials (wood, leaves, etc.).
Do not cover the motorbike with the canvas, when the engine and exhaust system are hot, to avoid damaging it.

Attention

Using padlocks or other locks designed to prevent motorcycle motion, such as brake disk locks, rear sprocket locks, etc. is dangerous and may impair motorcycle operation and affect the safety of rider.

Refueling

Never overfill the tank when refueling. Fuel should never be touching the rim of filler recess.

Caution

The fuel pressure inside the tank may, in extreme cases, cause fuel to “spray” when opening the fuel cap.
Always open the fuel cap slowly and carefully during the refill.
If you hear an audible hiss from the cap while opening it, wait until the stop of the hissing before opening it completely.
The sound is residual pressure escaping from the fuel tank, therefore the stop of the hiss indicates that there is no more residual pressure.
The situation described above is more likely in hot weather conditions.

Attention

Use fuel with the lowest octane rating 90 (RON +MON)/2

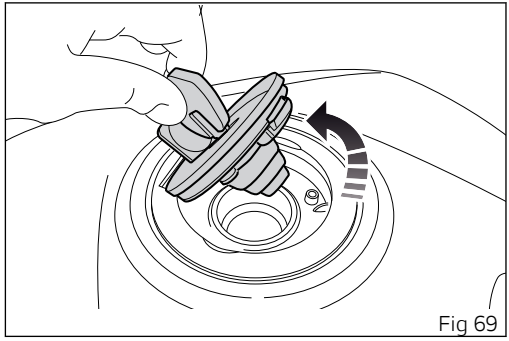

Fig 69

Attention

The vehicle is compatible only with fuel having a maximum ethanol content of 10% (E10).
Using fuel with ethanol content over 10% is prohibited. Using it could result in severe damage of the engine and motorcycle components. Using fuel with ethanol content over 10% will render the Warranty null and void.

Tool kit and accessories

The glove compartment positioned inside the seat back (A) contains a 0.16 in (4 mm) L-shaped Allen wrench (1).

To gain access to the compartment, remove the passenger seat (A) as described in chapter “Seat lock”.

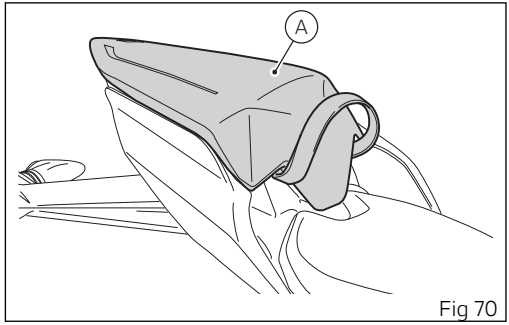

Fig 70

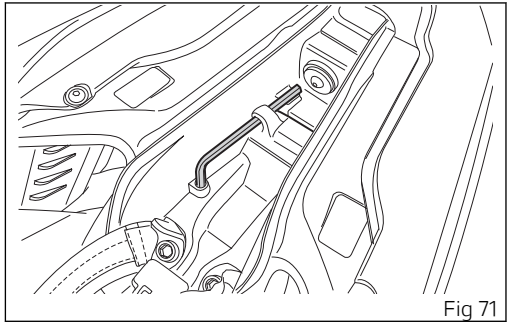
Fig 71

Instrument panel (Dashboard)

Instrument panel

The bike is equipped with a COBO instrument panel featuring a TFT color display.

The instrument panel provides all the information needed for safe riding and allows you to customize the vehicle settings and parameters.

Warning lights

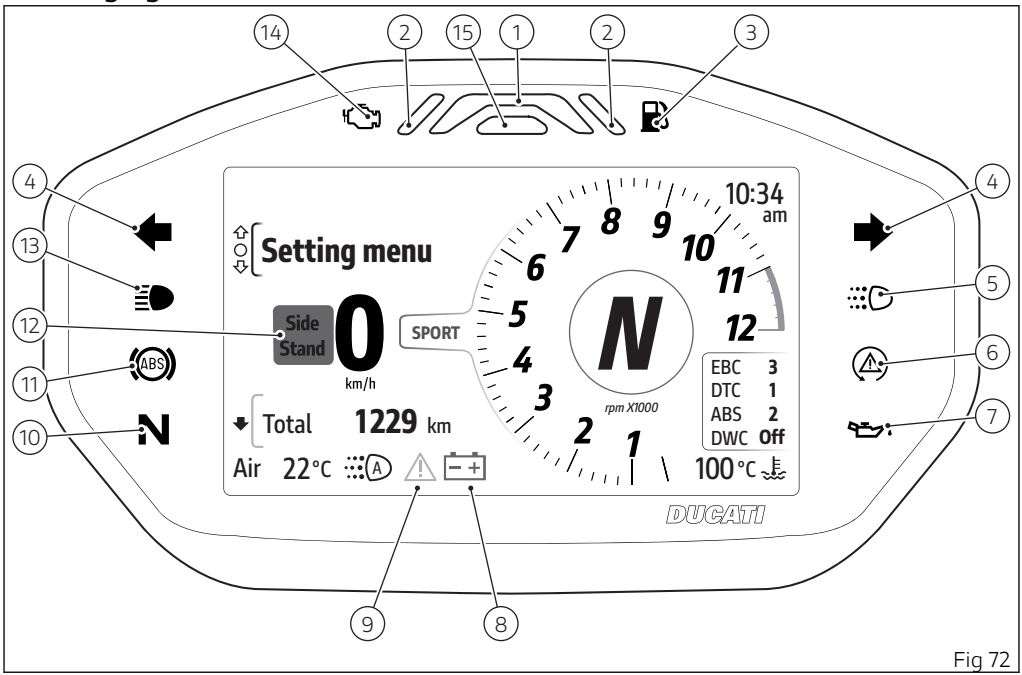

Fig 72

no.	Description	Color
1	Rev limiter / immobilizer	Red
2	Rev limiter	Red
3	Low fuel	Amber yellow
4	Turn indicators	Green
5	DRL – daytime riding lights on (not present in China and Canada versions)	Green
6	DTC/DWC status ● flashing: DTC/DWC enabled, but with degraded performance; ● on: DTC/DWC disabled and/or not functioning due to a fault in the control unit.	Amber yellow
7	Engine oil low pressure **Important** If the ENGINE OIL light stays ON, stop the engine or it may suffer severe damage.	Red
8	Low battery charge level	Red (display)
9	Generic error	Amber yellow (display)
10	Neutral gear	Green
11	ABS status ● flashing: ABS in self-diagnosis and/or functioning with degraded performance;	Amber yellow

no.	Description	Color
	• on: ABS disabled and/or not functioning due to a fault in the ABS control unit.	
12	Side stand	Red (display)
13	High beam on	Blue
14	MIL • The warning light turns steady on in case of error in engine management. Proceed slowly, avoid harsh acceleration and overtaking, take the vehicle to a Ducati authorized service center to eliminate the malfunction. • The warning light turns on flashing to warn about a critical emission-related error that could damage the catalytic converter. If possible, have the vehicle be taken to a Ducati authorized service center and the malfunction eliminated and at any rate proceed slowly, avoid harsh acceleration and overtaking.	Amber yellow
15	DTC/DWC intervention	Amber yellow

Important

If the display shows the message "TRANSPORT MODE", immediately contact your Ducati Dealer that will delete this message and ensure the full operation of the motorcycle.

Upon key-on, the instrument panel displays the Ducati logo and carries out a sequential check of the LED warning lights.
After this routine, the instrument panel displays the main page in the mode in use before last Key-Off.

During this check stage, if the bike speed exceeds 3 mph (5 km/h), the instrument panel will stop:

- the display check routine and display the standard screen containing updated information;
- the warning light check routine and leave on only the warning lights that are actually active at the moment.

Main page items

The main screen displays all the information and elements needed for riding.
It is possible to change units of measurement through the “Measurement units” function in the “Setting menu” (page 180)

The table lists the available items.

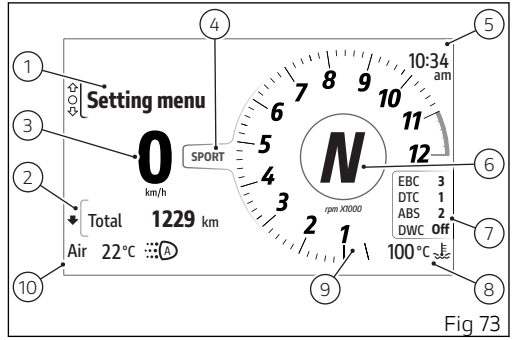

Fig 73

no.	Description
1	Interactive menu
2	Info display
3	Speed It is displayed increased by 5% and together with the set unit of measurement (km/h or mph).
4	Riding Mode in use Refer to “Riding Mode” (page 109)
5	Clock It is possible to set it through the "Date and time" function in the "Setting menu" (page 164).
6	Gear
7	Parameters window It displays the values of the EBC, DTC, ABS, DWC parameters set for the current Riding Mode. In case of errors on one or more parameters, "Err" is displayed instead of the relevant value. The window disappears when the bike speed exceeds 3 mph (5 km/h) or when the heated handgrips (page 117) are activated.

no.	Description
8	Engine Coolant temperature (°C or °F) The temperature display range goes from +104 °F to +248 °F (+40 °C to +120 °C). If the temperature is below +104°F (+40°C), “Low” is displayed, whereas if it is above +248°F (+120°C), “High” is displayed flashing red together with the red temperature symbol. **Attention** In case of overheating, if possible, it is recommended to ride at reduced speed to allow the cooling system to lower the engine temperature. If this is not possible due to traffic conditions, stop and turn the engine off. If the bike continues to be used when the engine is overheated, severe damage may occur. When the engine temperature returns to normal, continue riding by frequently checking the instrument panel indication. In case of a temperature sensor error or a temperature below -40 °F (-40 °C), a red temperature symbol and three blinking dashes are displayed in place of the value.
9	Rev counter Refer to “Engine rpm indication” (page 112)
10	Air temperature (°F or °C) **Note** When the vehicle is stopped, the engine heat may influence the displayed temperature.

Interactive menu and Info display

The “Interactive Menu” contains a series of functions that can be activated by the rider. When a function is activated, a corresponding window is displayed with which you can interact.

The "Info display" menu includes all counters referred to available trip information (see page 113)

When one of the menus is selected, it is indicated with the active frame (A) and buttons (1), (2) and (3) are used for menu navigation and interaction.
To toggle the selection between "Interactive menu" and "Info display" and vice versa:

- if "Interactive menu" is currently selected, long press and hold button (2) to move the selection to “Info display” (C);
- if "Info display" is currently selected, long press and hold button (1) to move the selection to "Interactive menu" (B).

Buttons (1) and (2) are mainly used to scroll and select items in the selected menu. Button (3) is used to activate and interact with the selected menu item. The left part of the menus shows the following symbols indicating the possible interaction of buttons (1), (2) and (3):

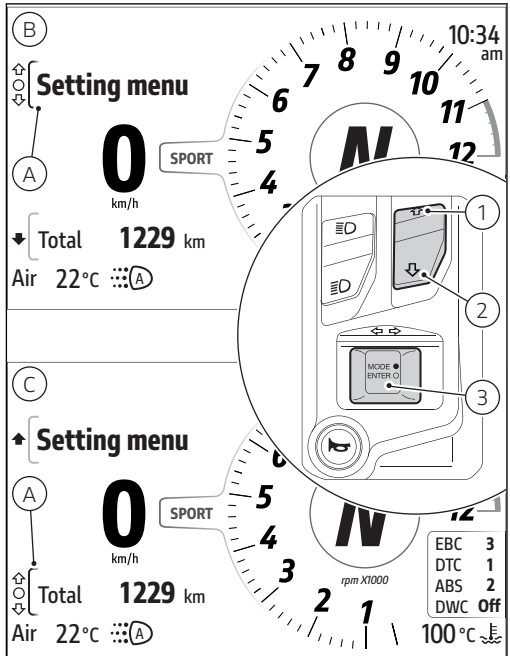

Fig 74

- ⇧ short press of button (1);
- ⇩ short press of button (2);
- ○ short press of button (3);
- ⬆ long press of button (1);
- ⬇ long press of button (2);
- ● long press of button (3).

Riding Mode

3 Riding Modes are available: SPORT, ROAD, WET.
The name of the active Riding Mode is shown at the center of the display (A).
Each Riding Mode is associated with a different color for the name and rev counter box.

The parameters associated to each Riding Mode are: Engine, ABS, DTC, DWC, EBC, DQS.
For each Riding Mode it is possible to customize the parameters using the “Riding Mode” function in the “Setting menu” (page 126).

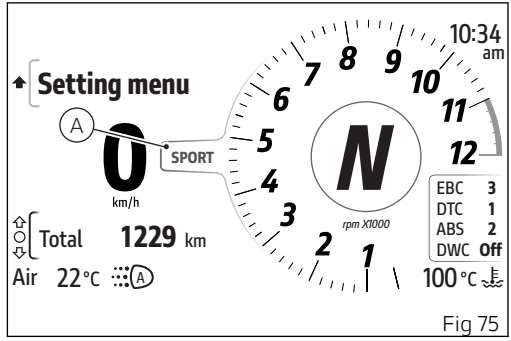

Fig 75

Changing the Riding Mode

- Press and hold the MODE/ENTER button (3) for a long time.
- The dedicated screen is displayed (Fig 77) where, using buttons (1) and (2), it is possible to scroll through the available Riding Modes and display the parameters with the relevant set values.
- Press the MODE/ENTER button (3) to confirm.

Select "Exit" and press MODE/ENTER button (3) to quit the screen without making any changes.

As soon as the new Riding Mode is confirmed, the instrument panel checks the following conditions:

- If the throttle control is open the message “Close throttle” is displayed; the new Riding Mode is confirmed and stored only when throttle control is closed and the main screen is displayed.
- If speed is above 5 km/h (3 mph), throttle control is closed, but brakes are actuated, the message “Release brakes”, is displayed; the new Riding Mode is confirmed and stored only when brakes are released and then the main screen is displayed.

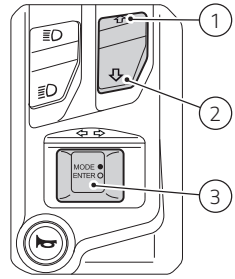

Fig 76

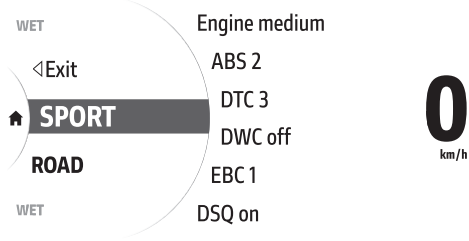

Fig 77

- If both of the above conditions occur, the message "Close throttle and release brakes" is displayed. The new Riding Mode is confirmed and stored only when both conditions are satisfied and then the main screen is displayed.

If either of the conditions required to validate the change of Riding Mode are not true within 5 seconds from activation of one of the above-described conditions, the procedure will be aborted, the instrument panel will go back to displaying the main page and no settings will be changed.

Attention

Ducati recommends changing the Riding mode when the vehicle is stopped. If the riding mode is changed while riding, be very careful (it is recommended to change the Riding mode at a low speed).

Engine rpm indication

Engine revs per minute are displayed using a rev counter featuring a gray wake (A).
During the first 600 mi (1000 km) of the odometer (vehicle break-in period), or up to the first service, a virtual engine rpm limiter is set and is indicated when the wake becomes amber yellow.
After the break-in period or after the first inspection, the virtual limiter indicates and advises the rider to ride at lower revs when the engine is cold. The virtual limiter threshold changes according to engine temperature: if the engine temperature is below 122 °F (50 °C), the rpm threshold is 7000 rpm.

When the wake becomes amber yellow and starts flashing, the instrument panel is warning the rider to shift up.
The wake becomes flashing red when the rev limiter trips: in this case the rev limiter light (page 100) turns on, too.
If the number of rpm is lower than 1,000 rpm, the wake is not displayed.

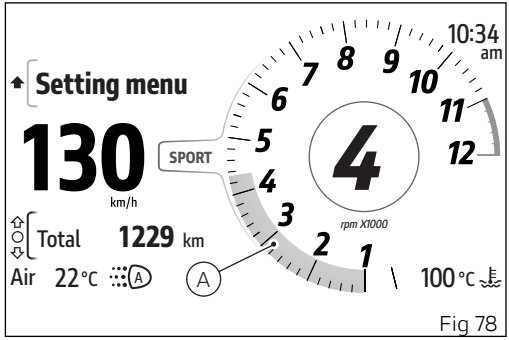

Fig 78

Attention

Your motorcycle is equipped with a rev limiter which limits the engine speed to approximately 3000 rpm when the engine is in neutral with the clutch released. This is to prevent excessive noise pollution and also to avoid reaching engine speeds that are harmful to the engine without load.
When this limiter comes into operation the revs will be limited and there will be a flashing Overrev indication on the instrument panel. When the clutch is pulled, this function is not active.

Info display

The “Info display” menu contains all available meters with trip information (A).
To select the "Info display" menu, press and hold the button (2) for a long time.
Once you have selected the “Info display” menu, scroll through the list of information using the buttons (1) and (2).

The units of measurement of the trip information can be changed using the “Units” function in the “Setting menu” (page 180).

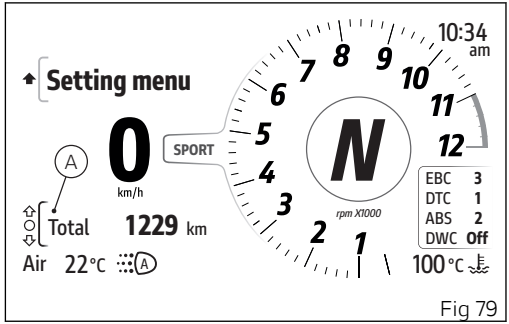

Fig 79

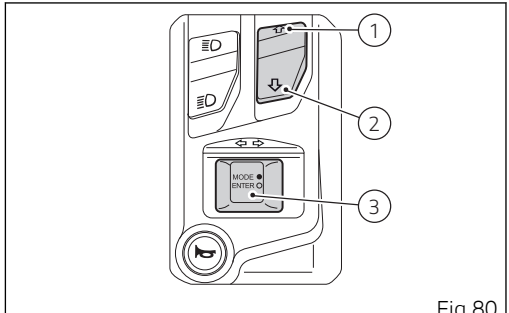

Fig 80

The information contained in the “Info display” menu are listed below.

Name	Description	Measurement units / format
Total	Total odometer	km, miles
Trip 1	Partial mileage 1	km, miles
Øcons.1	Average consumption 1	L/100, km/l, mpg UK, mpg US
Øspeed 1	Average speed 1	km/h, mph
Trip 1 time	Travel time 1	hhh:mm
Trip fuel	Residual range When the bike is in a low fuel condition, this function is activated and automatically displayed in the Info display, regardless of the function previously displayed. It is still possible to scroll through the other functions on the Info display. **Note** When the bike is no longer in a low fuel condition, the “Total” function is automatically displayed while the “Trip fuel” function is displayed.	km, miles
Trip 2	Partial mileage 2	km, miles

Name	Description	Measurement units / format
Cons.	Instantaneous fuel consumption	L/100, km/l, mpg UK, mpg US

Resetting Trip 1 information

The trip information “Trip 1”, "Ø cons.1", "Ø speed 1" and "Trip 1 time", when selected, can be reset by pressing the ENTER button (3): the message "Reset Trip 1 info?" is displayed (Fig 81).
To confirm, press ENTER (3). To exit without making any changes, keep button (1) pressed for a long time.
When the Trip 1 information is reset, all the meters that refer to it are reset as well.

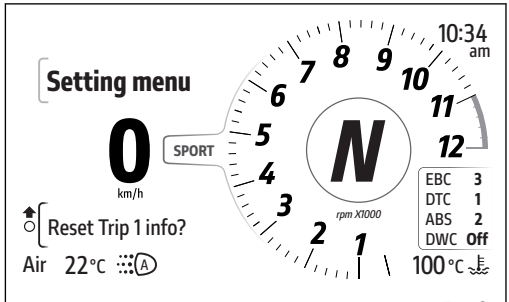

Fig 81

Resetting Trip 2 information

The “Trip 2” information, when selected, can be reset by pressing the ENTER button (3): "Reset Trip 2 info?” will be displayed (Fig 82).
To confirm, press ENTER (3). To exit without making any changes, keep button (1) pressed for a long time.

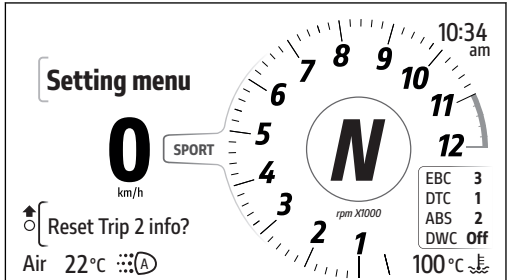

Fig 82

Heated handgrips

This function allows the user to activate and set the handgrip heating.

- Select the Interactive Menu (A) by pressing and holding button (1) down for a long time.
- Use buttons (1) and (2) to select item “Heated Grips” (B) and press ENTER (3).

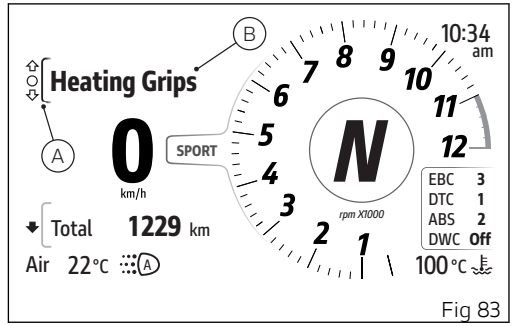

Fig 83

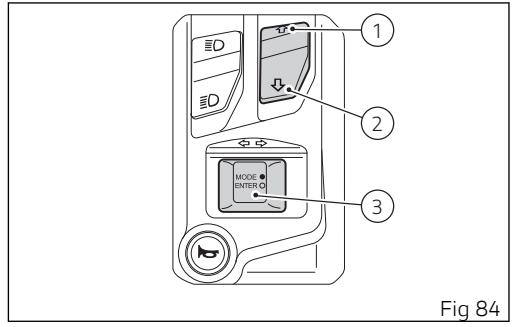

Fig 84

Window (C) is displayed for adjusting the handgrip heating; here the 4 available levels (High, Medium, Low, Off) and the “Back” item are listed.
Use buttons (1) and (2) to scroll through the available levels. Press ENTER (3) to confirm the selected level. To close the window, select the "Back" item and press the ENTER (3) button, or press and hold button (1).
Each level is associated with an icon (D) in gray when heating is off. When the heating is activated, the icon turns black if the display is in “day” mode and white if the display is in “night” mode.
To change the “day” or “night” display mode, refer to the chapter “Setting menu - Backlight” (page 163).

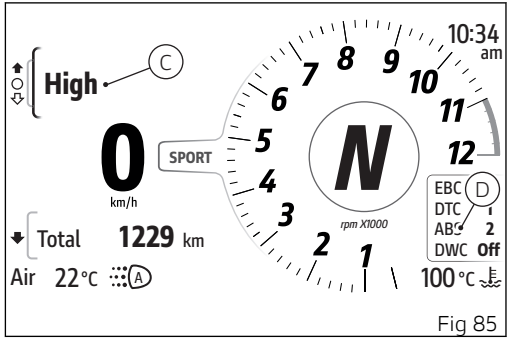

Fig 85

Note

The actual turning on (heating) of the heated handgrips occurs only with engine started, and when a certain number of engine rpm have been reached and maintained: heating power is limited to 50% up to 2,000 rpm.

Lap

This function is available inside the Interactive Menu and allows recording the lap times.

- Select the Interactive Menu (A, Fig 86) by pressing and holding button (1) pressed for a long time.
- Use buttons (1) and (2) to select item “Lap” (B, Fig 86)and press the ENTER button (3).

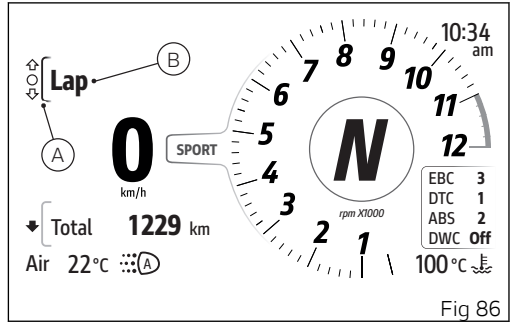

Fig 86

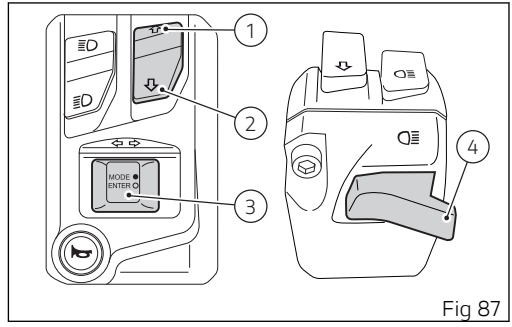

Fig 87

The relevant window (C, Fig 88) is displayed:

- If the function is disabled, “On” is shown with the stopwatch (D, Fig 89); press the ENTER button (3) to enable the function.
- If the function is enabled, “Off” is shown with the stopwatch and indication of the available laps (E, Fig 89); press the ENTER button (3) to disable the function.

When the function is active, the current lap number is shown and “Lap” is displayed next to the gear indication.
It is possible to record maximum 30 laps. When the 30th lap is reached, the message “Full” is displayed and it is not possible to record new times: in this case, delete the saved laps in order to record new ones.
Using the "Lap" function in the "Setting menu" (page 170) it is possible to:

- Activate or deactivate the function
- View the recorded lap data
- Delete recorded data

To close the window, press and hold button (1) for a long time. The window can be closed keeping the function active.

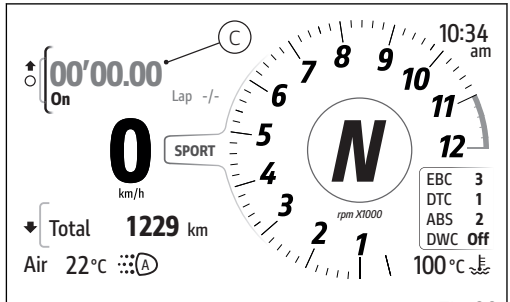

Fig 88

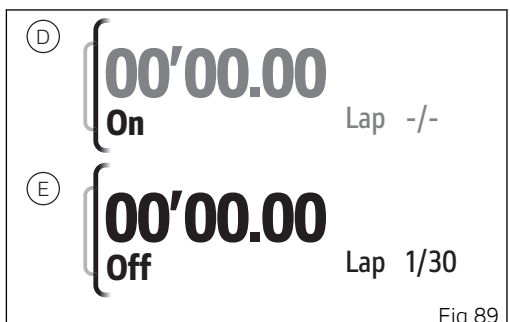

Fig 89

Lap time recording without GPS

Once the function is activated, flash button (4, Fig 87) must be used to start/stop the stopwatch: the first time the flash button is pressed, the stopwatch flashes for 1 second.

Then, every time the flash button (4) is pressed, the stopwatch displays the time just completed by flashing for 1 second and remaining steady for another 5 seconds, and returns to display the time in progress.
If the time just completed is the best among those recorded up to that moment, the stopwatch displays the recorded time flashing for 6 seconds, after which it returns to display the time of the current lap, updating the number of laps.

Lap time recording with GPS control unit

If there is a GPS control unit on the bike, time recording is managed automatically by the instrument panel after activating the "Lap" function. The display shows GPS (F, Fig 90)symbol further to timer and lap number.
When lap one starts, press button (4, Fig 87) to start the timer: both timer (that starts) and lap number will flash for 1 second.
At the same time, the instrument panel stores finish-line coordinates via the GPS control unit and activates the logo "finish line" (G, Fig 90): all the following laps will be directly recorded by the instrument panel and button (4, Fig 87)is no longer used to manage the timer.
Any time the bike reaches the finish-line position as recorded by the instrument panel, the just recorded time and lap will flash for 1 second and remain displayed for another 5 seconds; after this period of time the function displays again the timer and lap progressive number.
If the time just completed is the best among those recorded up to that moment, the stopwatch displays the recorded time flashing for 6 seconds, after which

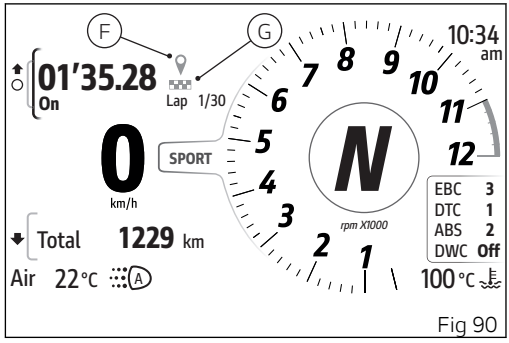

Fig 90

it returns to display the time of the current lap, updating the number of laps.

Finish-line position can be changed by pressing button (4, Fig 87)again: the following lap times are then calculated with reference to the new finish-line coordinates.
As soon as the finish-line position is saved, it is not possible to manually delete it from GPS memory. The only way is to move at least 9 mi (15 km) away from the memorized finish line.

The following data are recorded for each lap:

- Time
- Maximum reached speed
- Maximum reached rpm
- Maximum leaning angle
- Maximum yaw angle

The instrument panel stops recording the lap by resetting the stopwatch in the following cases:

- If bike speed is equal to 0 after 5 seconds from first lap start.
- If bike speed drops below 3 mph (5 km/h) for more than 5 seconds during lap recording
- If the engine is turned off.

Note
If during lap recording the flash button (4) is pressed to start/stop the stopwatch, any further button presses occurred within 5 seconds will not be considered by the instrument panel.

Note
While recording a lap time, timer will reset and restart if time exceeds 07'59.99.

Note
If no previously recorded lap times are present, lap counter is displayed with a dash "Lap –".

Note
If the "Lap" function is active, music player activation ("Music" function) will stop the "Lap" function and set it to "Off".

Note
If a song is being played from the Smartphone via the "Music" function, activating the "Lap" function will interrupt the player.

Setting menu

This menu allows enabling, disabling and setting some bike functions.

For safety reasons, you can enter this Menu only when the speed is lower than or equal to 3 mph (5 km/h). If you are inside the Setting menu and the speed exceeds 3 mph (5 km/h) the instrument panel automatically exits from the setting menu. It is recommended to use this menu with the bike at a standstill.

- Select the Interactive Menu (A) by pressing and holding button (1) down for a long time.
- Use buttons (1) and (2) to select item “Setting menu” (B) and press the ENTER button (3).

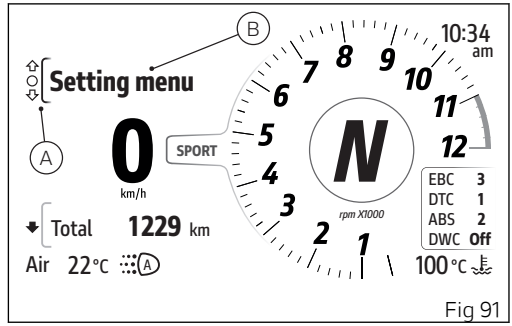

Fig 91

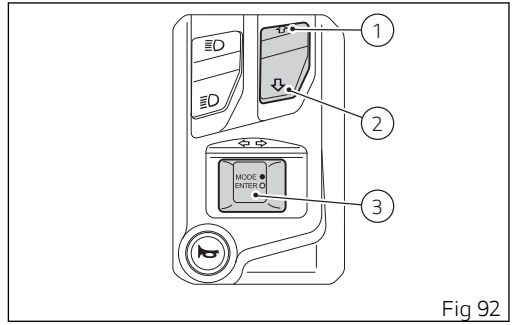

Fig 92

The instrument panel displays the dedicated page listing the available settings:

- Riding Mode
- Pin code
- DRL (if present)
- Backlight
- Date and time
- Service
- Lap
- Tire calibration
- Bluetooth (see page 13
- Turn indicators
- Units
- DDA (if present)
- Info

Buttons (1), (2) and (3) are used as follows when displaying the Setting menu:

- buttons (1) and (2) to scroll and select the available items;
- ENTER button (3) to confirm the selected item.

To exit the sub-menus of the Setting menu, select the "Back" item and press the ENTER button (3).

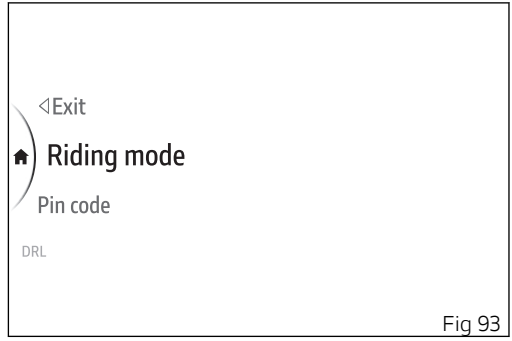

Fig 93

To exit the Setting menu and return to the main screen, select the "Exit" item and press the ENTER button (3).

Setting menu - Riding Mode

This function allows customizing each Riding mode.

- Use buttons (1) and (2) from the Interactive Menu to select the “Setting menu” item and press ENTER (3).
- Select the “Riding Mode” item and press ENTER (3).

The “Sport”, “Road”, “Wet” Riding Modes and “Default” item are displayed (only visible if one or more parameters of one or more Riding Modes have been changed). The active Riding Mode (Fig 95) is displayed on the right side.

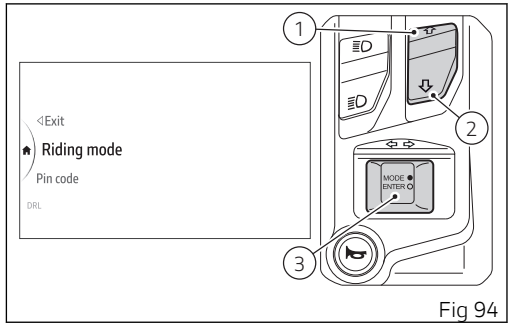

Fig 94

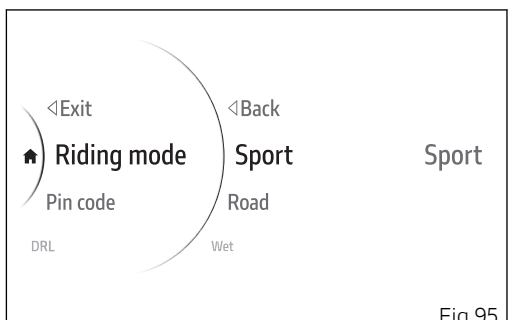

Fig 95

Use buttons (1) and (2) to select the Riding mode you wish to customize and press ENTER.
The customizable parameters are the following:

- Engine
- ABS
- DTC
- DWC
- EBC
- DQS
- Default (visible only if one or more parameters of the selected Riding Mode have been changed)

The bike is shown in the middle of the screen with the part relevant to the selected item highlighted, press ENTER to modify the parameters.

Fig 96

Attention

Changes should only be made to the parameters by people who are experts in motorcycle set-up. If the parameters are changed accidentally, use the "Default" function to restore factory settings.

Setting menu - Riding Mode - Engine

This function allows setting the engine power.

- Use buttons (1) and (2) from the Interactive Menu to select the “Setting menu” item and press ENTER (3).
- Select the “Riding Mode” item and press ENTER (3).
- Select the Riding Mode you wish to customize and press ENTER (3).
- Select the “Engine” item and press ENTER (3).

Levels “High”, “Medium” and “Low” are displayed on the left side. While the currently set level is shown on the right. The bike is shown in the middle with the part involved in the setting highlighted and the reference indications.

Use buttons (1) and (2) to scroll and select the desired level. Press ENTER (3) to confirm and quit the setting menu.

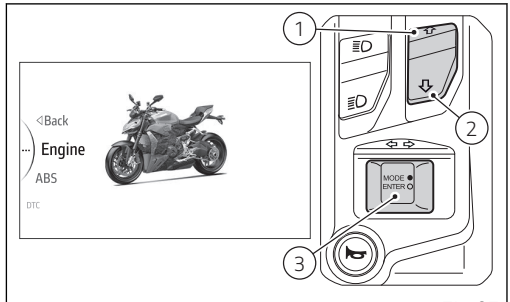

Fig 97

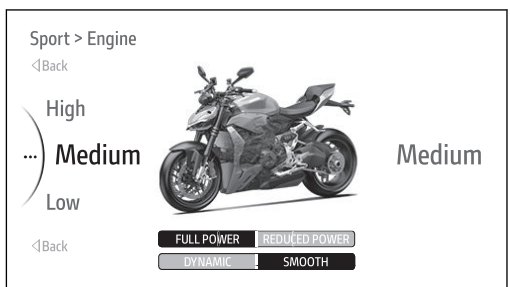

Fig 98

Setting menu - Riding Mode - ABS

This function allows setting the ABS intervention level.

- Use buttons (1) and (2) from the Interactive Menu to select the “Setting menu” item and press ENTER (3).
- Select the “Riding Mode” item and press ENTER (3).
- Select the “ABS” item and press ENTER (3).

Levels from 1 to 3 are displayed on the left-hand side. While the currently set level is shown on the right. The bike is shown in the middle with the part involved in the setting highlighted and the reference indications.

Use buttons (1) and (2) to scroll and select the desired level. Press ENTER (3) to confirm and quit the setting menu.

Using the brakes correctly under adverse conditions is the hardest – and yet the most critical - skill to master for a rider. Braking is one of the most difficult and dangerous moments when riding a two-wheeled vehicle: the possibility of falling or having an

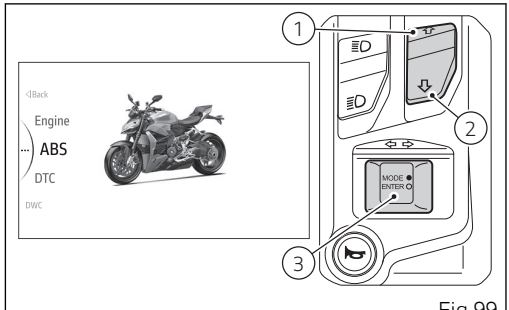

Fig 99

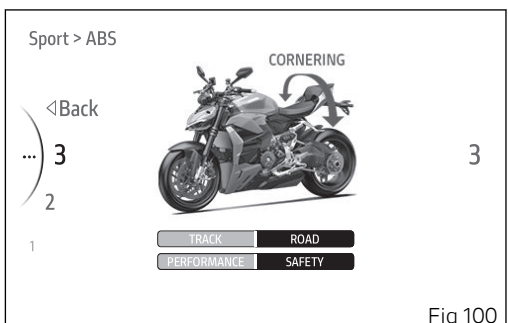

Fig 100

accident during braking is statistically higher than at any other moment. When one or both wheels lock, the stabilizing action of traction fails, resulting in loss of control of the vehicle.

The Anti-Lock Braking System (ABS) has been developed to enable riders to use the bike braking force to the fullest possible amount in emergency braking or under poor pavement or adverse weather conditions.
ABS is an electro-hydraulic device that controls the pressure in the brake circuit when the control unit, by processing information from wheel sensors, determines that one or both wheels are about to lock up. This avoids wheel lockup and preserves traction within the limits of the system.
After that, the control unit restores the pressure in the circuit, to resume the braking action. This cycle is repeated many times until the problem is completely eliminated. Normally, the rider will perceive ABS operation as a harder feel or a pulsation of the brake lever or brake pedal. The front and rear brakes use separate control systems.

The ABS system fitted to the Streetfighter V2 prevents wheel lockup while braking, adopting different strategies depending on the selected level. The ABS features 3 levels, one associated to each Riding Mode. The active presence of strategies and their intervention level depend on the selected level.

The Streetfighter V2 ABS features a "cornering" function that optimizes ABS functionality to the conditions where the bike is leaning over, thus preventing wheel lockup and slipping as much as possible, within the physical limits allowed by the vehicle and by the road conditions. The cornering feature is active in ABS levels 2 and 3.
According to the selected level, the ABS can implement the anti lift-up function for the rear wheel so as to guarantee not only a reduced stopping distance under braking, but also the highest possible stability.

In ABS level 1, the system only works on the front discs to ensure top performance for track use.
In ABS level 2, the system works on the front and on the rear, and also the “slide control under braking” is active. Under some activation conditions, ensuring in any case the maximum rider safety, the ABS system allows more pronounced slipping at the rear allowing vehicle yaw or slide, so as to permit a more sporty and faster corner entry. This control activates when the user acts on the rear brake during a

sufficiently strong braking also at the front. During the operation of this system, the ABS monitors vehicle slipping or slide level, so that it remains below a safety level, which depends on the lean angle. If vehicle slipping or slide level increases too much, the ABS operates again in standard mode, realigning the vehicle in order to always ensure the maximum safety.
In ABS level 3, besides the cornering function, also the lift-up control is active. This control prevents rear wheel lift-up, thus allowing the vehicle to keep a good alignment during the whole braking action.

Attention

Using the two brake controls separately reduces the bike braking power.
Never use the brake controls harshly or suddenly as you may cause rear wheel lift-up and lose control of the bike.
When riding in the rain or on slippery surfaces, braking will become less effective. Always use the brakes very gently and carefully when riding under these conditions. Any sudden maneuvers may lead to loss of control. When tackling long, high-gradient downhill road tracts, shift down gears to use engine braking. Apply one brake at a time and use brakes sparingly. Keeping the brakes applied all the time would cause the friction material to overheat and reduce braking power dangerously.
Underinflated or overinflated tires reduce braking efficiency, handling accuracy and stability in a bend.

The following table indicates the most suitable level of ABS intervention for the various riding types, as well as the default settings in the "Riding Mode" that can be selected by the rider:

ABS	RIDING MODE	USE	DEFAULT
1	TRACK	This level is designed for exclusive track use, for expert riders. ABS in this mode only works on the front wheel, and thus allows rear wheel lockup. Anti lift-up cornering features are not active.	-
2	SPORT	This level is designed for use with good grip conditions. ABS in this level controls both wheels and the cornering function is active; while anti-lift-up control is not active. This calibration focuses on braking power and yet keeps good stability. In this level, also the “slide control under braking” is active.	It is the default level for the SPORT riding mode.

ABS	RIDING MODE	USE	DEFAULT
3	ALL/URBAN/WET CONDITION	This level is designed for use in any riding conditions to provide a safe and consistent braking action. ABS in this level controls both wheels and the cornering and anti-lift-up functions are active.	It is the default level for the ROAD and WET Riding Modes.

Tips on how to select the intervention level

Excellent operation of the ABS system, for all available levels, is ensured only with the OE brake system and with OE tires and/or with the ones recommended by Ducati. In particular, OE tires for this bike are:

- Front 120/70 ZR17 M/C (58W) TL with Pirelli Diablo Rosso Corsa IV tire
- Rear 180/60 ZR17 M/C (75W) TL with Pirelli Diablo Rosso Corsa IV tire

The use of tires of different size and characteristics to the original tires may alter the operating characteristics of the system thus making it unsafe. It is recommended not to install tires of different size than the ones approved for your vehicle.

Selecting level 3, the ABS will ensure a kind of braking that privileges stability thanks to lift-up control, and the bike will keep a good alignment during the whole braking action. ABS level 3 features active cornering function which, with vehicle leaning over, prevents wheel lockup and slipping as much as possible, within the physical limits allowed by the vehicle and by the road conditions.

Selecting level 2, the ABS will privilege more and more the braking power rather than stability and lift-up control, which is disabled in level 2. ABS level 2 provides the cornering feature. Moreover, level 2 activates the function of slide control under braking (available in this level only).
ABS level 1 is specific for track use and ABS is active only on the front wheel. In this level, the Cornering feature and the lift-up control are not implemented.

The choice of the correct level mainly depends on the following parameters:

1) The tire/road grip (type of tire, amount of tire wear, the road/track surface, weather conditions, etc.).
2) The rider's experience and sensitivity: expert riders can tackle a lift-up in trying to reduce the stopping distance to a minimum, while less expert riders are recommended to use setting 3, that will help them keeping the bike more stable even in emergency braking.

Setting menu - Riding Mode - DTC

This function allows setting the intervention level of the DTC traction control system or deactivating it.

- Use buttons (1) and (2) from the Interactive Menu to select the “Setting menu” item and press ENTER (3).
- Select the “Riding Mode” item and press ENTER (3).
- Select the Riding Mode you wish to customize and press ENTER (3).
- Select the “DTC” item and press ENTER (3).

Levels from 1 to 8 and “Off” are displayed on the left-hand side. While the currently set level is shown on the right. The bike is shown in the middle with the part involved in the setting highlighted and the reference indications.

Use buttons (1) and (2) to scroll and select the desired level. Press ENTER (3) to confirm and quit the setting menu.

Attention

When the DTC is set to Off, the DWC is also automatically set to Off, so both the wheelie control and the vehicle dynamics stabilization control are deactivated.

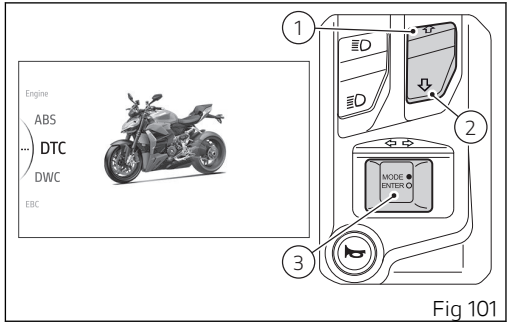

Fig 101

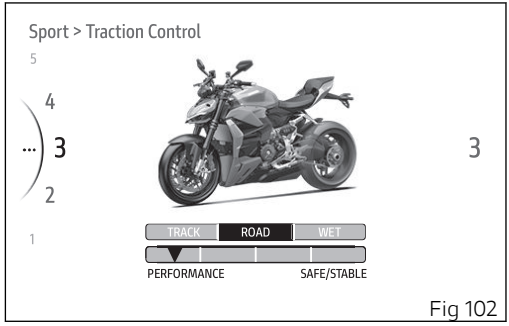

Fig 102

The Ducati Traction Control system (DTC) supervises the rear wheel slipping control and settings vary through eight different levels that are calibrated to offer a different tolerance level to rear wheel slipping. Each Riding Mode features a preset intervention level. Level 8 indicates system intervention whenever a slight slipping is detected, while level 1 is for track use and very expert riders because it is less sensitive to slipping and intervention is thus rarer.

Attention

DTC is a rider aid that can be used both on the road and on the track. The system is designed to make riding easier and to enhance safety, but in no way relieves the rider of the obligation to ride responsibly and maintain a high standard of conduct in accordance with traffic laws so as to avoid accident or force emergency maneuvers, whether caused by his own errors or those of other road users.

The rider must always be aware that active safety systems have a preventive function. The active elements help the rider control the bike, making it as easy and safe to ride as possible. The presence of an active safety system should not encourage the rider to ride at speeds beyond the reasonable limits, not in accordance with road conditions, the laws of physics, good riding standards and traffic laws.

The following table indicates the most suitable level of DTC intervention for the various riding modes, as well as the default settings in the “Riding Mode” that can be selected by the rider:

DTC LEVEL	RIDING MODE	OPERATION CHARACTERISTIC	DEFAULT
OFF		The DTC is disabled.	NO
1	TRACK Professional	This level is designed for exclusive track use, for very expert riders. In this mode, the DTC allows side-slipping.	NO
2	TRACK	This level is designed for exclusive track use, for expert riders. In this mode, the DTC allows side-slipping.	NO
3	ROAD Performance	This level is designed for sport road style.	It is the default level for the “SPORT” Riding Mode
4	ROAD	This level is designed for riding on the road.	NO
5	ROAD	This level is designed for riding on the road.	It is the default level for the “ROAD” Riding Mode
6	ROAD Safe	This level is designed for use in any riding conditions, on the road with good grip.	NO

DTC LEVEL	RIDING MODE	OPERATION CHARACTERISTIC	DEFAULT
7	RAIN	This level is designed for track use when surface is wet.	NO
8	HEAVY RAIN	This level is designed for road use, when surface is wet and very slippery. ENGINE LOW must be used for an optimum operation of this level.	It is the default level for the “WET” Riding Mode

Tips on how to select the intervention level

Attention

Excellent operation of the DTC system, for all available levels, is ensured only with OE tires and/or with the ones recommended by Ducati and with the OE final drive ratio. In particular, OE tires for this motorcycle are:

- Front 120/70 ZR17 M/C (58W) TL with Pirelli Diablo Rosso Corsa IV tire
- Rear 180/60 ZR17 M/C (75W) TL with Pirelli Diablo Rosso Corsa IV tire

The use of tires of different size and characteristics to the original tires may alter the operating characteristics of the system thus making it unsafe. It is recommended not to install tires of different size than the ones approved for your vehicle.

As far as tires are concerned, in the case of minor differences, such as for example, tires of a different make and/or model than the OE ones, it is necessary to use the relevant automatic calibration function in order to restore correct system operation.

As far as the final ratio is concerned, when using a different ratio (which is only possible for track use) than the original equipment one, it is recommended to use the relevant automatic calibration function in order to restore optimal system operation.

If level 8 is selected, the DTC will kick in at the slightest hint that the rear wheel is starting to spin. Between level 8 and level 1 there are 6 further intermediate levels. DTC intervention gradually decreases from level 8 to level 1.

The choice of the correct level depends on 3 main variables:

1) The grip (type of tire, amount of tire wear, the road/track surface, weather conditions, etc.)
2) The characteristics of the path/circuit (bends all taken at similar speeds or at very different speeds)
3) The riding mode (whether the rider has a "smooth" or a "rough" style)

Level depends on grip conditions

The choice of level setting depends greatly on the grip conditions of the track/circuit (see below, tips for use on the track and on the road). Poor grip requires a higher level that ensures a more aggressive DTC intervention.

Level depends on type of track

If the track/path features bends all taken at similar speeds, it will be easier to find a level suitable for all bends; while a track/path with bends all requiring different speeds will require a DTC level setting that is the best compromise for all bends.

Level depends on riding style

The DTC will tend to kick in more with a "smooth" riding mode, where the bike is leaned over further, rather than with a "rough" style, where the bike is straightened up as quickly as possible when exiting a turn.

Tips for use on the track

We recommend that level 6 be used for a couple of full laps (to allow the tires to warm up) in order to get used to the system. Then try levels 5, 4, etc., in succession until you identify the DTC sensitivity level that suits you best.
Once you have found a satisfactory setting for all the corners except one or two slow ones, where the system tends to kick in and control too much, you can try to modify your riding style slightly to a "rougher" approach to cornering i.e. straighten up more rapidly on exiting the corner, instead of immediately trying a different level setting.

Tips for use on the road

We recommend level 6 in order to get used to the system. If the level of DTC intervention seems aggressive, try reducing the setting to levels 5, 4, etc. until you find the level that suits you best.

If changes occur in the grip conditions and/or circuit characteristics and/or your riding style, and the level setting is no longer suitable, switch to the next level up or down and proceed to determine the best setting (e.g. if with level 5 the DTC intervention seems excessive, switch to level 4; alternatively, if on level 5 you cannot perceive any DTC intervention, switch to level 6).

Setting menu - Riding Mode - DWC

This function allows setting the intervention level of the DWC or deactivating it.

- Use buttons (1) and (2) from the Interactive Menu to select the “Setting menu” item and press ENTER (3).
- Select the “Riding Mode” item and press ENTER (3).
- Select the Riding Mode you wish to customize and press ENTER (3).
- Select the “DWC” item and press ENTER (3).

Levels from 1 to 4 and “Off” are displayed on the left-hand side. While the currently set level is shown on the right. The bike is shown in the middle with the part involved in the setting highlighted and the reference indications.

Use buttons (1) and (2) to scroll and select the desired level. Press ENTER (3) to confirm and quit the setting menu.

Attention

When the DTC is set to Off, the DWC is also automatically set to Off, so both the wheelie control and the vehicle dynamics stabilization control are deactivated.

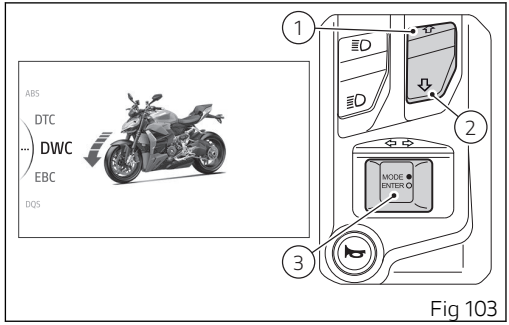

Fig 103

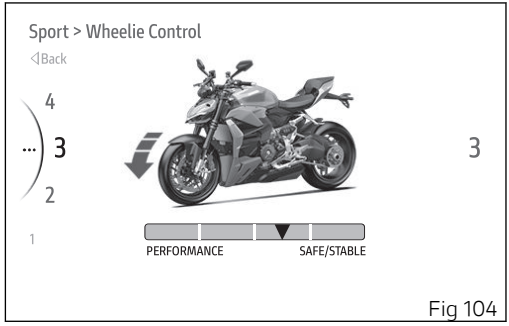

Fig 104

The Ducati Wheelie Control system (DWC) supervises control of wheelie movement and settings vary through 4 different levels that are calibrated to offer a different prevention and reaction to wheelies. Each Riding Mode features a preset intervention level. Level 4 indicates a setting that minimizes bike tendency to shift up in a wheelie and maximizes reaction to the same, if it occurs. While level 1 is for expert riders and features a lower wheelie control in terms of prevention and less strong reaction to the same, if it occurs.

DWC is a rider aid that can be used both on the track and the road. The system is designed to make riding easier and to enhance safety, but in no way relieves the rider of the obligation to ride responsibly and maintain a high standard of conduct in accordance with traffic laws so as to avoid accident or force emergency maneuvers, whether caused by his own errors or those of other road users.

The DWC is a rider assist system. The system is designed to make riding easier and to enhance safety, but in no way relieves the rider of the obligation to ride responsibly and maintain a high standard of conduct in accordance with traffic laws so as to avoid accident or force emergency maneuvers, whether caused by his own errors or those of other road users.

The following table indicates the most suitable level of DWC intervention for the various riding types as well as the default settings in the "Riding Modes" that can be selected by the rider:

DWC LEVEL	USE		DEFAULT
OFF	–	The DWC is disabled.	NO
1	HIGH PERFORMANCE	Road use and track use for expert riders. The system allows wheelies, but decreases the speed at which the front wheel lifts.	NO
2	PERFORMANCE	Road use and track use for expert riders. The system reduces the bike's proneness to do wheelies and intervenes in case of wheelie.	It is the default level for the “SPORT" Riding Mode
3	SPORTIVE	Level for all kinds of riders. The system reduces the bike's proneness to do wheelies and sensitively intervenes in case of wheelie.	It is the default level for the “ROAD" Riding Mode

DWC LEVEL	USE		DEFAULT
4	SAFE & STABLE	Level for all kinds of riders. The system reduces the bike's proneness to do wheelies to a minimum level and sensitively intervenes in case of wheelie.	It is the default level for the “WET" Riding Mode

Tips on how to select the intervention level

Attention

Excellent operation of the DWC system, for all available levels, is ensured only with the OE final drive ratio and with OE tires and/or with the ones recommended by Ducati. In particular, OE tires for this motorcycle are:

- Front 120/70 ZR17 M/C (58W) TL with Pirelli Diablo Rosso Corsa IV tire
- Rear 180/60 ZR17 M/C (75W) TL with Pirelli Diablo Rosso Corsa IV tire

Using tires with different size and characteristics from the original tires may alter the operating characteristics of the system thus making it unsafe. It is recommended not to install tires of different size than the ones approved for your vehicle.

At level 4 the DWC system reduces the bike's proneness to do wheelies to a minimum level and sensitively intervenes in case of wheelie.
Between level 4 and level 1 there are further intermediate levels of intervention for the DWC. Levels 1 and 2 allow easier wheelies, but reduce their speed: these levels are recommended only for track use and for expert riders who can control wheelies on their own and exploit the system feature that reduces the speed at which the front wheel tends to lift.

The choice of the correct level mainly depends on the following parameters:

1) The rider's experience.
2) The characteristics of the path/circuit (bend exit with low or high gear engaged).

The rider's experience

The choice of level setting depends greatly on the riders' experience and ability to control wheelies on their own. Levels 1 and 2 require a great experience to ensure proper control.

Level depends on type of track

If the track/path features bends where out speed and gear are low, a lower level will be necessary; while a track/path with faster bends will allow the use of a higher level setting.

Tips for use on the track

We recommend that level 4 be used for a couple of full laps in order to get used to the system. Then try levels 3, 2, etc., in succession until you identify the

DWC sensitivity level that suits you best (always try each level for at least two laps to allow the tires to warm up).

Tips for use on the road

Activate the DWC, select level 4 and ride the bike in your usual style; if the level of DWC sensitivity seems excessive, try reducing the setting to level 3, 2, etc., until you find the level that suits you best. If changes occur in the circuit characteristics, and the level setting is no longer suitable, switch to the next level up or down and proceed to determine the best setting (e.g. if with level 2 the DWC intervention seems excessive, switch to level 1; alternatively, if on level 2 you cannot perceive any DWC intervention, switch to level 3).

Setting menu - Riding Mode - EBC

This function allows setting the EBC intervention level.

- Use buttons (1) and (2) from the Interactive Menu to select the “Setting menu” item and press ENTER (3).
- Select the “Riding Mode” item and press ENTER (3).
- Select the Riding Mode you wish to customize and press ENTER (3).
- Select the “EBC” item and press ENTER (3).

Levels from 1 to 3 are displayed on the left-hand side. While the currently set level is shown on the right. The bike is shown in the middle with the part involved in the setting highlighted and the reference indications.

Use buttons (1) and (2) to scroll and select the desired level. Press ENTER (3) to confirm and quit the setting menu.

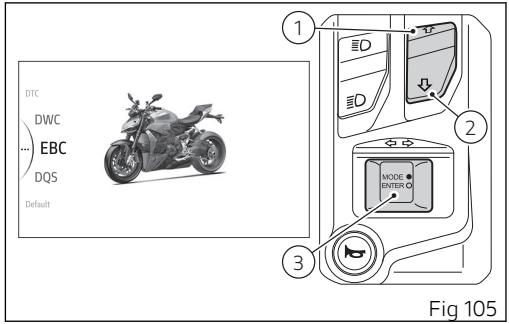

Fig 105

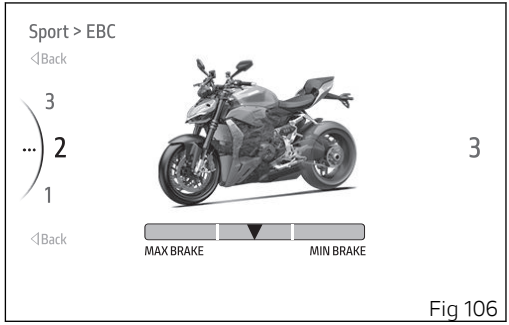

Fig 106

The engine brake control system (EBC) works together with the slipper clutch to avoid and control the rear wheel lockup during aggressive downshifting.
EBC features a three-tiered operating system and is integrated in the three Riding Modes.

The Engine Braking Control (EBC) system controls engine braking when riding with throttle control completely closed (both when downshifting and in a normal cut-off with the same gear engaged, while braking or not). This system independently adjusts the throttle valves to ensure a consistent torque goes back from the wheel to engine during these stages.
The system allows the rider to set "engine brake", the range being from a maximum engine braking with system set to level 1, and progressively decreasing as level increases.
System intervention is quite important at high engine rpm and decreases as the engine rpm decreases.

Attention
EBC is a rider aid that can be used both on the track and the road. The system is designed to make riding easier and to enhance safety, but in no way relieves the rider of the obligation to ride responsibly and maintain a high standard of conduct in accordance with traffic laws so as to avoid accidents or force emergency maneuvers, whether caused by his own errors or those of other road users.

The following table indicates the most suitable level of EBC intervention for the various riding modes as well as the default settings in the "Riding Modes" that can be selected by the rider.

EBC	CHARACTERISTIC	DEFAULT
1	In this level the engine delivers the maximum engine brake.	It is the default level for the SPORT and ROAD Riding Modes.
2	In this level the engine delivers a low engine brake. This level is recommended to any rider requiring reduced engine braking in deceleration.	It is the default level for the WET Riding Mode.
3	In this level the engine delivers the least engine brake. This level is recommended to any rider requiring very low engine braking in deceleration.	NO

Tips on how to select the intervention level

Excellent operation of the EBC system, for all available levels, is ensured only with OE tires and/or with the ones recommended by Ducati and with the OE final drive ratio. In particular, OE tires for this motorcycle are:

- Front 120/70 ZR17 M/C (58W) TL with Pirelli Diablo Rosso Corsa IV tire
- Rear 180/60 ZR17 M/C (75W) TL with Pirelli Diablo Rosso Corsa IV tire

Using tires with different size and characteristics from the original tires may alter the operating characteristics of the system thus making it unsafe. It is recommended not to install tires of different size than the ones approved for your vehicle.

As far as tires are concerned, in the case of minor differences, such as for example, tires of a different make and/or model than the OE ones, it is necessary to use the relevant automatic calibration function in order to restore correct system operation.

As far as the final ratio is concerned, when using a different ratio (which is only possible for track use) than the original equipment one, it is recommended to use the relevant automatic calibration function in order to restore optimal system operation.
Selecting level 3, the EBC will kick in to ensure the minimum engine brake possible. Between level 3 and level 1 the engine brake levels are increasing progressively; with level 1 you set the maximum engine brake level possible.
The choice of the correct level mainly depends on the following parameters:

1) The grip (type of tire, amount of tire wear, the road/track surface, weather conditions, etc.).
2) The characteristics of the path/circuit (bends all taken at similar speeds or at very different speeds).
3) The Riding Mode.

Level depends on grip conditions

The choice of level setting depends greatly on the grip conditions of the track/circuit.

Level depends on type of track

If the track/path requires consistent braking (always aggressive or always smooth), it will be easier to find a level suitable for all braking instances; while a track/path requiring different braking power will

require an EBC system level setting that is the best compromise for all instances.

Setting menu - Riding Mode - DQS

This function allows activating or deactivating the DQS system.

- Use buttons (1) and (2) from the Interactive Menu to select the “Setting menu” item and press ENTER (3).
- Select the “Riding Mode” item and press ENTER (3).
- Select the Riding Mode you wish to customize and press ENTER (3).
- Select the “DQS” item and press ENTER (3).

Levels “On” and “Off” are displayed on the left-hand side. While the currently set level is shown on the right. The bike is shown in the middle with the part involved in the setting highlighted and the reference indications.

Use buttons (1) and (2) to scroll and select the desired level. Press ENTER (3) to confirm and quit the setting menu.

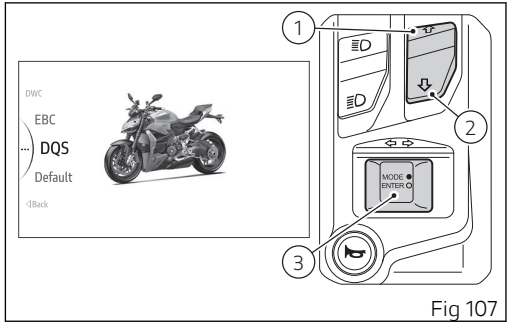

Fig 107

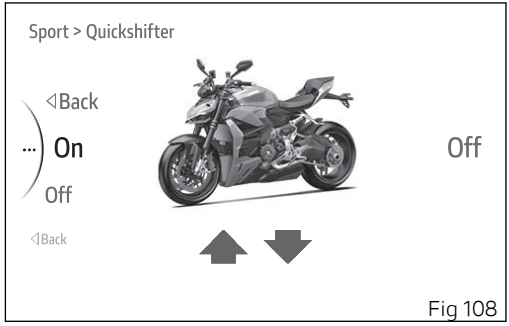

Fig 108

Tips on how to best exploit the DQS function:

1) The Ducati Quick Shift takes the same shift lever operation as with vehicle not equipped with the Ducati Quick Shift. Ducati Quick Shift is not designed for shifting automatically.
2) For any gearshift request (upshifting or downshifting) the rider has to move the shift lever from its idle position in the desired direction against the force of the spring through a certain over-travel, then keep the shift lever in this position until the gearshift is completed. Once the gearshift has been completed, the lever has to be fully released in order to allow another gearshift acted by the Ducati. Quick Shift. If the rider doesn't move the shift lever up to end stroke during a Ducati Quick Shift request, gears may not be fully engaged.
3) Ducati Quick Shift provides no assistance for the gearshift if the rider uses the clutch lever: the Ducati Quick Shift does not work when the clutch lever is pulled. Ducati Quick Shift will shift down (downshifting) only when the throttle control is completely closed.
4) If the Ducati Quick Shift strategy doesn't work it is always possible to complete the gear shifting using the clutch lever.
5) If the gear lever is held pressed up or down for more than 131 seconds (even if just by accident) a plausibility error can be memorized in the electronic control unit and the Ducati Quick Shift system could be disabled; in this case, to reactivate the system, it is necessary to release the lever, switch the instrument panel off, wait for 5 minutes and switch the instrument panel on again.
6) Ducati Quick Shift is designed to operate above 2,500 rpm.
7) No matter the gear engaged, downshifting with Ducati Quick Shift (downshifting) only woks below a set threshold, so as to avoid exceeding the maximum rpm allowed when the lower gear is engaged.

Setting menu - Riding Mode - Default

This function allows restoring the values of the parameters linked to the Riding Modes set by Ducati, and is visible only if the parameters have been previously modified.

Resetting the parameters for a single Riding Mode (Fig 109):

- Use buttons (1) and (2) from the Interactive Menu to select the “Setting menu” item and press ENTER (3).
- Select the “Riding Mode” item and press ENTER (3).
- Select the Riding Mode you wish to customize and press ENTER (3).
- Select the “Default” item and press ENTER (3). The message “Wait...” is displayed for a few seconds followed by the message “Default Ok”. Then “Default” disappears from the menu list.

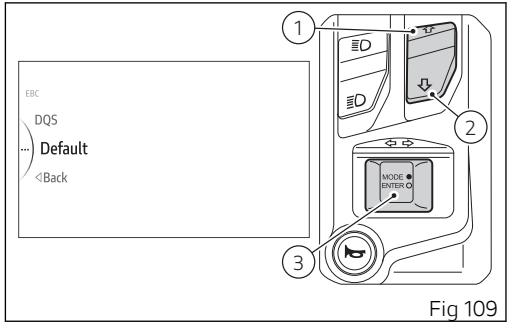

Fig 109

Resetting the parameters for all Riding Modes (Fig 110):

- Use buttons (1) and (2) from the Interactive Menu to select the “Setting menu” item and press ENTER (3).

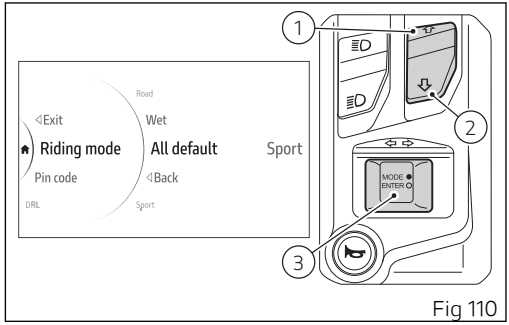

Fig 110

- Select the “Riding Mode” item and press ENTER (3).
- Select the “All Default” item and press ENTER (3). The message “Wait...” is displayed for a few seconds followed by the message “Default Ok”. Then “Default” disappears from the menu list.

Setting menu - PIN Code

This function allows the user to activate or modify the PIN Code.

- Use buttons (1) and (2) from the Interactive Menu to select the “Setting menu” item and press ENTER (3).
- Select the "PIN Code" item and press ENTER.

The PIN Code is initially not present in the bike and must be activated by the user by entering the 4-digit PIN in the instrument panel, otherwise the bike cannot be started temporarily in the case of a malfunction.
In order to temporarily start the bike in case of malfunction, please refer to the procedure called “Restoring bike operation via the PIN Code”.

If the PIN Code has never been activated, this menu will include the “New PIN” item to activate it. While if the PIN Code has already been activated, this menu will include the “Modify PIN” item, which allows modifying the already stored PIN.

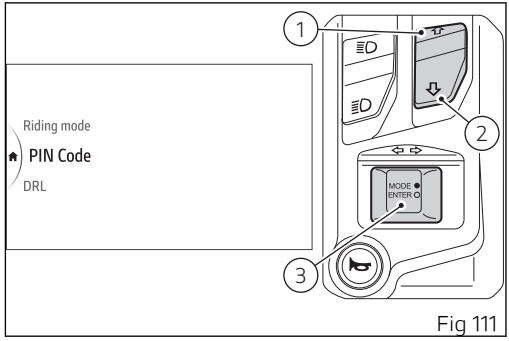

Fig 111

Attention

The PIN Code must be activated and stored by the vehicle owner. If a PIN Code is already set, please contact your Ducati authorized dealer to reset it. The Ducati authorized dealer may ask you to demonstrate that you are the owner of the motorcycle.

New PIN

- Use buttons (1) and (2) from the Interactive Menu to select the “Setting menu” item and press ENTER (3).
- Select the "PIN Code" item and press ENTER (3).
- Select the “New PIN” item and press ENTER (3).

The display shows “New PIN” on the left and the first of the 4 digits active for the entry.

Entering the code:

- The 2 arrows above and below the digit indicate that the number can be changed from 0 to 9 using buttons (1) and (2).
- Press ENTER (3) to confirm and move on to the following digit.
- Repeat the procedure until entering all 4 digits (Fig 114).

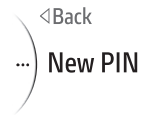

Fig 112

Fig 113

Once the last digit has been confirmed, “Save” is displayed.
Press ENTER to confirm, “Saved” is then displayed for a few seconds.
The instrument panel returns to the previous screen displaying “Modify PIN” instead of “New PIN” (Fig 116).

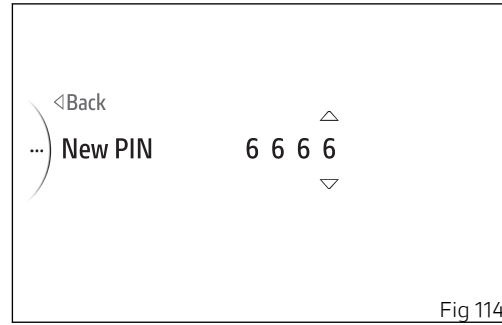

Fig 114

Fig 115

Modify PIN

- Use buttons (1) and (2) from the Interactive Menu to select the “Setting menu” item and press ENTER (3).
- Select the "PIN Code" item and press ENTER (3).
- Select the “Modify PIN” item and press ENTER (3).

The display shows “Current PIN” on the left and the first of the 4 digits active for the entry.

Entering the code:

- The 2 arrows above and below the digit indicate that the number can be changed from 0 to 9 using buttons (1) and (2).
- Press ENTER (3) to confirm and move on to the following digit.
- Repeat the procedure until entering all 4 digits.

Once the fourth digit is entered, press ENTER (3) and the instrument panel behavior will be as follows:

- If the entered PIN is correct, the display shows “Correct”.
- If the PIN entered is incorrect, “Wrong” is displayed and a new attempt to enter the current PIN can be made.

If the PIN is correct, enter the new PIN.

Fig 116

Fig 117

The display shows “New PIN” on the left and the first of the 4 digits active for the entry (Fig 113).

Entering the code:

- The 2 arrows above and below the digit indicate that the number can be changed from 0 to 9 using buttons (1) and (2).
- Press ENTER (3) to confirm the digit and move on to the following one.
- Repeat the procedure until entering all 4 digits (Fig 114).

Once the last digit has been confirmed “Save” (Fig 115) is displayed.
Press ENTER (3) to confirm, “Saved” is then displayed for a few seconds and the instrument panel returns to the previous screen.

Setting menu - DRL

This function allows setting the status of the DRL in automatic or manual mode. Available only if daytime running lights (DRL) are present.

- Use buttons (1) and (2) from the Interactive Menu to select the “Setting menu” item and press ENTER (3).
- Select the “DRL” item and press ENTER (3).

“Auto” and “Manual” are displayed in the middle. While the currently set mode is shown on the right. Use buttons (1) and (2) to scroll and select the desired mode. Press ENTER (3) to confirm.

Note

In case of battery disconnection, the "Auto" mode is automatically set.

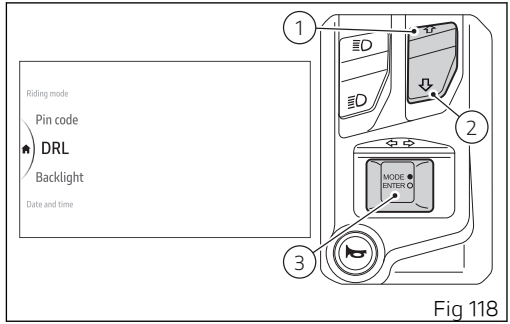

Fig 118

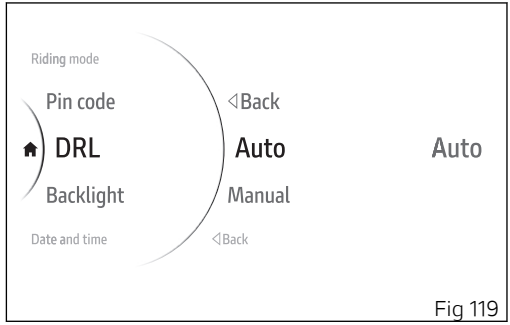

Fig 119

When the DRL is set to “Auto” mode, the corresponding warning light (A) will turn on.

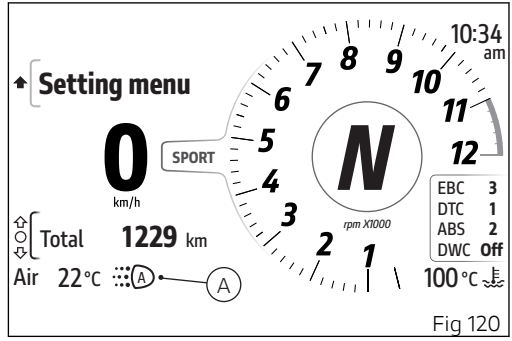

Fig 120

Setting menu - Backlight

This function allows setting the display day or night mode.

- Use buttons (1) and (2) from the Interactive Menu to select the “Setting menu” item and press ENTER (3).
- Select the “Backlight” item and press ENTER (3).

“Day”, “Night” and “Auto” are displayed in the middle. While the current status of the function is shown on the right.
The "Auto" mode allows the background color to automatically change according to the ambient light detected by the instrument panel.
Use buttons (1) and (2) to scroll and select the desired mode. Press ENTER (3) to confirm.

Note

In case of battery disconnection, the "Auto" mode is automatically set.

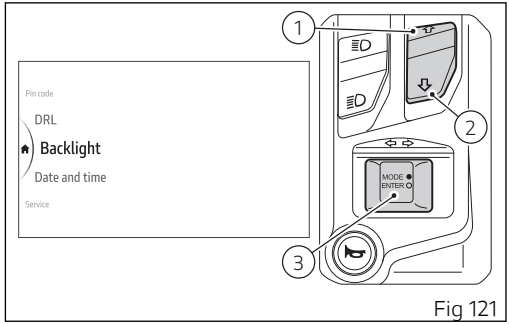

Fig 121

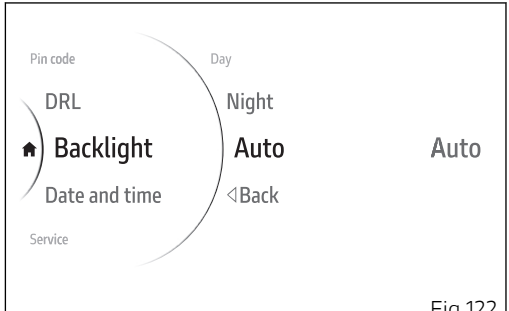

Fig 122

Setting menu - Date and time

This function allows setting date and time.

- Use buttons (1) and (2) from the Interactive Menu to select the “Setting menu” item and press ENTER (3).
- Select the “Date and time” item and press ENTER (3).

The items "Set date" and "Set time” (Fig 124) are displayed.
With buttons (1) and (2) it is possible to scroll through and select the parameter to be set. Press ENTER (3) to confirm.

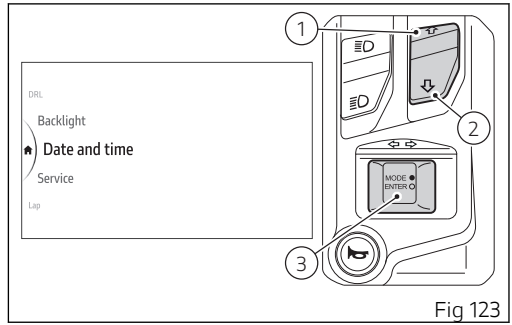

Fig 123

Note

If the date or time have never been set, a string of dashes “-” is displayed instead of the corresponding values.
Date and time must be set again after battery disconnection.

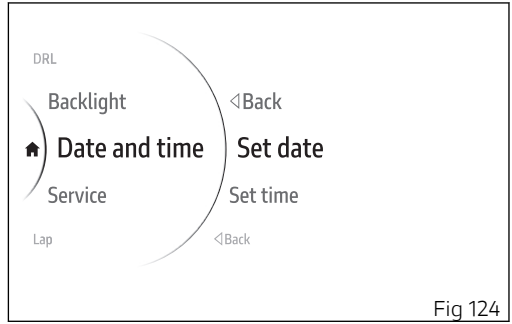

Fig 124

Date setting

The "Set date" function allows setting the date.

- Use buttons (1) and (2) from the Interactive Menu to select the “Setting menu” item and press ENTER (3).
- Select the “Date and time” item and press ENTER (3).
- Select the “Set date” item and press ENTER (3).

The first parameter of the date (Fig 126) starts flashing and is displayed with two arrows placed above and below it; the available values for the selected parameter are also displayed. Use buttons (1) and (2) to scroll and select the desired value. Press ENTER (3) to confirm and move on to the following parameter.

When confirming the last parameter:

- if the just entered date is not valid, “Wrong” is displayed for 3 seconds and then you can enter the correct date again;
- if the date just entered is correct, press ENTER (3) to quit.

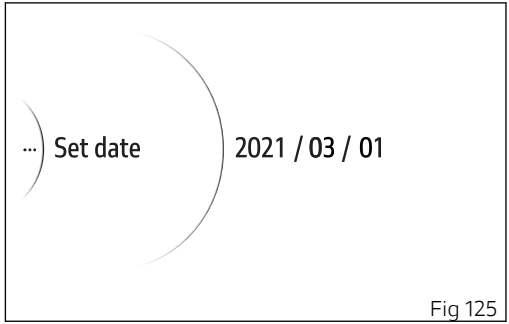

Fig 125

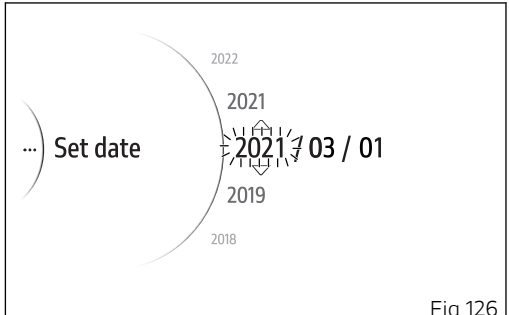

Fig 126

Time setting

The "Set time" function allows setting the time.

- Use buttons (1) and (2) from the Interactive Menu to select the “Setting menu” item and press ENTER (3).
- Select the “Date and time” item and press ENTER (3).
- Select the “Set time” item and press ENTER (3).

The hour number starts flashing and is displayed with two arrows placed above and below it; the available values are also displayed (Fig 128). Use buttons (1) and (2) to scroll and select the desired value. Press ENTER (3) to confirm and move on to the following parameter.
Once time has been set, press ENTER (3) to quit.

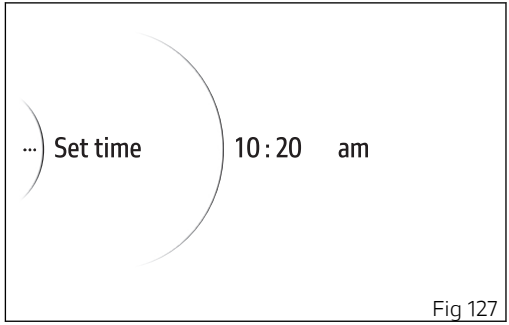

Fig 127

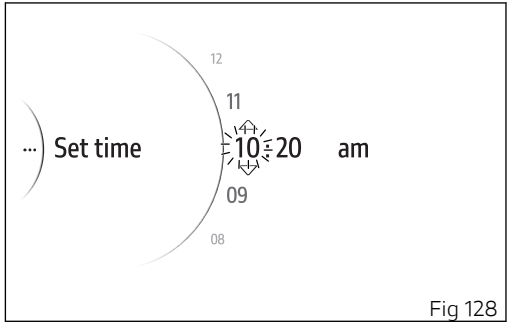

Fig 128

Setting menu - Service

This function allows displaying the next due services.

- Use buttons (1) and (2) from the Interactive Menu to select the “Setting menu” item and press ENTER (3).
- Select the “Service” item and press ENTER (3).

The display shows the information concerning the following service types:

1) Oil Service (remaining kilometers or miles)
2) Desmo Service (remaining kilometers or miles)
3) Annual Service (date)

Note

This function does not allow changes to be made.

The service thresholds are provided in the chapter "Scheduled maintenance chart: operations to be performed by the dealer" (see page 228).
Service coupon types are: “Oil Service”, “Desmo Service” and “Annual Service”.
The service warning indication can be reset only by the Ducati Authorized Service Center during servicing.

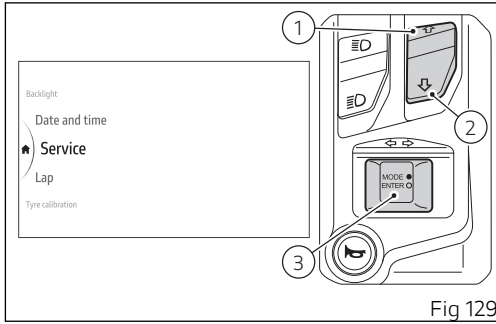

Fig 129

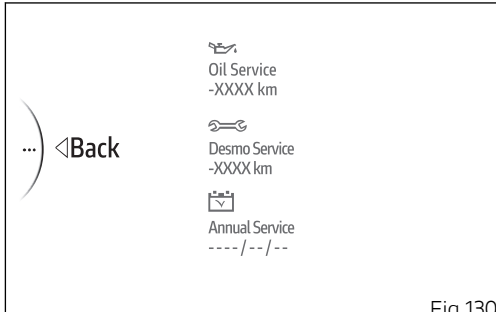

Fig 130

Service warnings

This indication shows the user that the bike is due for service and must be taken to a Ducati Authorized Service Center.
The service warning indication can be reset only by the Ducati Authorized Service Center during servicing.
Service coupon types are: “Oil service”, “Desmo Service” and “Annual service”.

Service coupon deadline warnings are displayed in 2 modes: big (A) and small (B).

When the thresholds set for service coupons are close, the instrument panel activates the following gray warnings for 5 seconds upon each Key-On, showing the remaining distance or days: for “Oil service” and “Desmo Service” it activates 621 miles (1,000 km) before service is due, for “Annual service” 30 days before service is due.

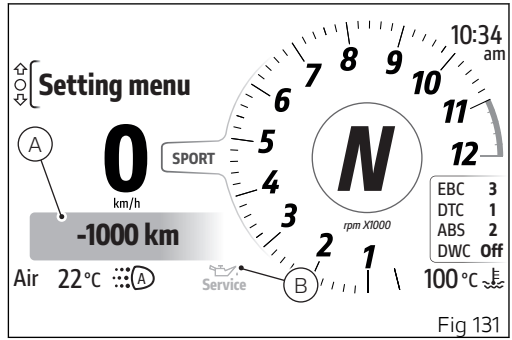

Fig 131

The image (Fig 132) shows the large version on the left and the small version of the relevant service coupons on the right.
Once the threshold of the service coupons has been reached and upon every Key-On, the corresponding amber yellow signal is activated in large mode (A, Fig 131)for 5 seconds, then the signal toggles to small mode (B, Fig 131): “Oil service” (C), “Desmo Service” (D), “Annual service” (E).
Amber yellow service warning is displayed until reset by the Ducati authorized service center, during maintenance.

Digital Maintenance

At the pre-set deadlines, it will be necessary to contact your Dealer who will carry out the maintenance scheduled for the deadline indicated on the instrument panel.
Using the dedicated diagnosis instrument, the Dealer will confirm that the service has been performed and postpone the next due deadlines.
The history of routine maintenance is saved on Ducati's servers in order to certify that it has been carried out (it is a digital maintenance booklet).

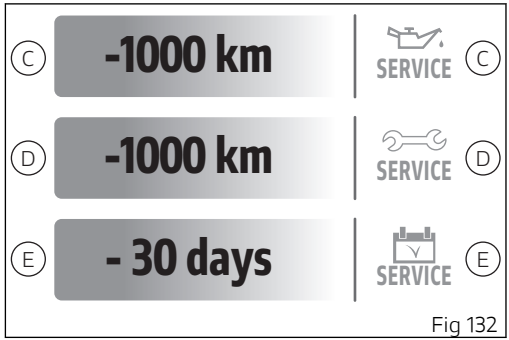

Fig 132

The bike owner is able to see the performed services both in the MyGarage reserved area (on Ducati.com website) and in the MyDucati App.

Setting menu - Lap

This function allows enabling or disabling the Lap function and view and delete the recorded LAPs.

- Use buttons (1) and (2) from the Interactive Menu to select the “Setting menu” item and press ENTER (3).
- Select the “Lap” item and press ENTER (3).

The following items are displayed: “On”, “Off”, “Lap data” and “Erase all” (visible only if laps have previously been recorded). The currently set function status is shown on the right (Fig 134).

“On” and “Off” items are used to activate and deactivate the Lap function, respectively. The “Lap data” item allows viewing the saved laps, while the “Erase all” item allows deleting the recorded laps. Use buttons (1) and (2) to scroll and select the desired item. Press ENTER (3) to confirm.

Note

Activation and deactivation can also be done directly from the “Lap” function in the Interactive Menu.

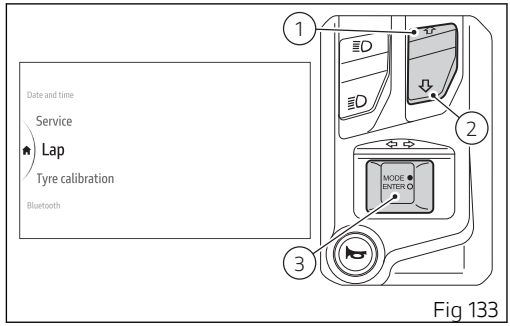

Fig 133

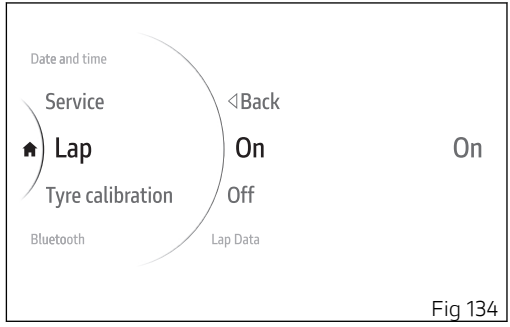

Fig 134

Lap data

This function allows viewing the data of each recorded lap.

- Use buttons (1) and (2) from the Interactive Menu to select the “Setting menu” item and press ENTER (3).
- Select the “Lap” item and press ENTER (3).
- Select the “Lap data” item and press ENTER (3).

Saved laps (maximum 30 laps) and the “Best lap” item are displayed on the left-hand side, while data recorded for the single lap are displayed in the middle:

- Time
- Maximum reached speed
- Maximum reached rpm
- Maximum leaning angle
- Maximum yaw angle

Use buttons (1) and (2) to scroll through the laps in the list and to view their recorded data.
Select “Best Lap” option to view best lap time data.

Note
If there are no stored laps, when accessing this menu the instrument panel will show No lap.

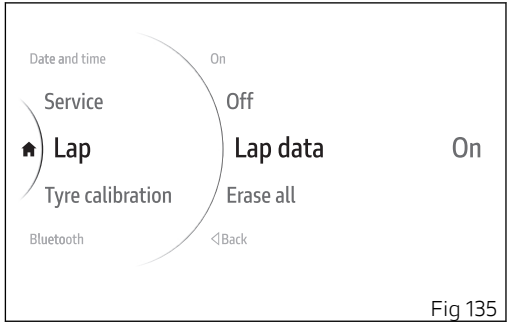

Fig 135

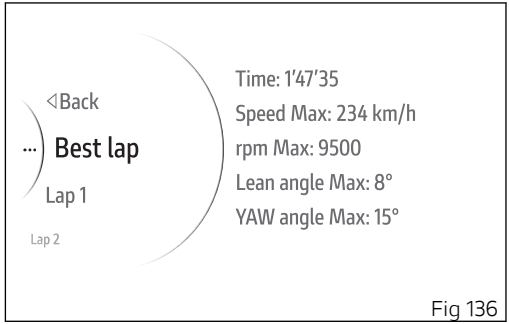

Fig 136

Erase all

This item is only displayed if laps have been previously recorded.

- Use buttons (1) and (2) from the Interactive Menu to select the “Setting menu” item and press ENTER (3).
- Select the “Lap” item and press ENTER (3).
- Select the “Erase all” item and press ENTER to erase the data.

The message “Wait...” is then displayed for a few seconds (Fig 138), followed by the message “Erased” for a few seconds. The previous screen will then be displayed without the “Erase all” item.

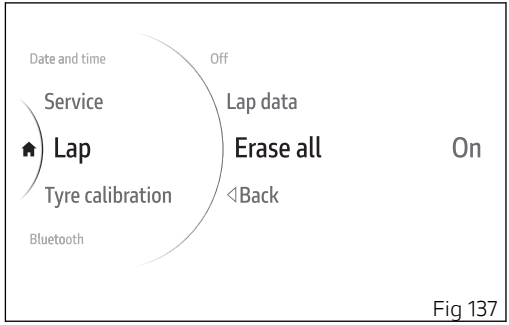

Fig 137

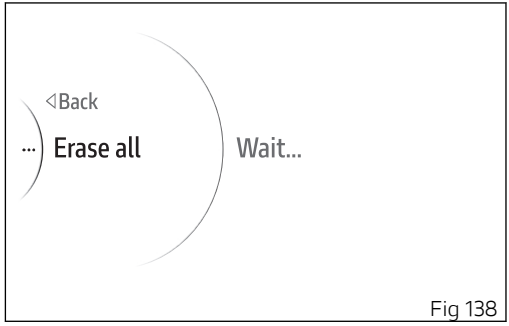

Fig 138

Setting menu - Tire calibration

This function allows the user to run the procedure for calibrating and teaching in the tire rolling circumference or to restore their original values. It also allows the correct learning of the final drive ratio (front sprocket/rear sprocket) in case of changes compared to the approved configuration. Refer to the table of permitted front sprocket/rear sprocket combinations for this model, if any.

The Tire Calibration function must therefore be performed:

- in case of tire replacement
- in case of change of final drive ratio

To access the function:

- Use buttons (1) and (2) from the Interactive Menu to select the “Setting menu” item and press ENTER (3).
- Select the “Tire calibration” item and press ENTER (3).

If a tire calibration has never been carried out, “Start” is displayed.
If a calibration has already been carried out, “Default” is displayed instead of “Start”.

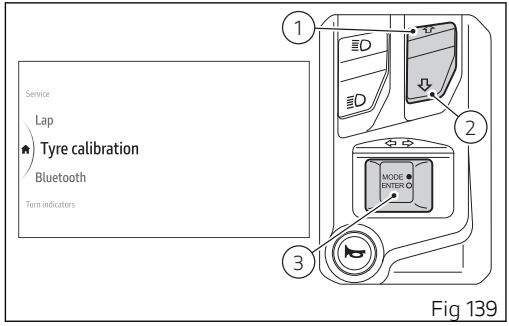

Fig 139

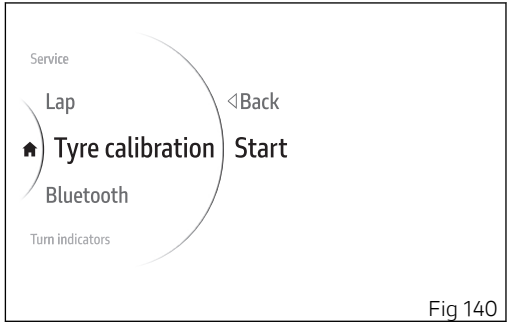

Fig 140

Start

- Enter the SETTING MENU.
- Use the navigation buttons to select "Tire calibration" option and press ENTER button.
- Select the "Start" option and press ENTER button.

When the calibration procedure starts, the instrument panel displays the message "Ready" (A), the message "Keep Speed" with speed range and the gear to be maintained by the user to complete the teach-in procedure. On the RH side is the reference Riding Mode, current speed and gear engaged.

Important

The teach-in procedure is allowed only at a vehicle speed between 30 mph (48 Km/h) and 32 mph (52 Km/h) in the 2nd gear.

When the rider complies with the required conditions of speed and gear indicated, the instrument panel starts system calibration: all previous information will be displayed showing "In progress" instead of "Ready".
Calibration is performed by keeping speed and gear within the indicated range for 5 seconds.

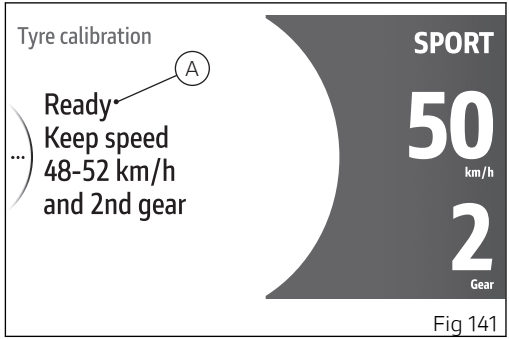

Fig 141

The procedure can be aborted by holding depressed the button (1) for a long time: in this case the instrument panel shows all previous information, replacing message "In progress" with message "Aborted", followed by the previous menu after a few seconds.

If the teach-in procedure is completed correctly, the instrument panel shows “Completed” (B) followed by the previous menu after a few seconds.

If an error or malfunction occurs during the calibration procedure, the instrument panel shows “Failed” followed by the previous menu after a few seconds.

Note
During the calibration procedure, the procedure will stop if the vehicle speed exceeds 62 mph (100 km/h) or the key is turned off.

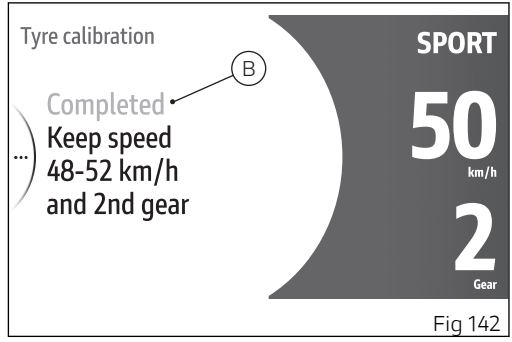

Fig 142

Tire calibration - Default

- Enter the SETTING MENU.
- Use the navigation buttons to select "Tire calibration" option and press ENTER button.
- Select the "Default" option and press ENTER button to restore default values.
- The message "Default Please Wait.." is displayed and after a while "Default Ok" for 2 seconds, then followed by the previous menu.

Attention
Changing the final drive ratio is only allowed for circuit (racetrack) use of the motorcycle, not on public roads.

Attention
In case of front sprocket and/or rear sprocket replacement, after performing the “Tire calibration” procedure, it is necessary to go to an authorized Ducati dealer which will carry out a “drive adaptive reset” with the diagnosis instrument. This prevents false plausibility diagnoses related to the final drive ratio.

Attention
Changing the final drive ratio immediately makes the warranty null and void and the motorcycle can not be used on public roads as it no longer corresponds to the type-approved version.

Final drive ratio		Rear sprocket					
		41	42	43	44	45	46
Front sprocket	15	2.73	2.8	2.87	2.93	3	3.07
	16	2.56	2.63	2.69	2.75	2.81	2.88

Setting menu - Turn indicators

This function allows user to set the turn indicators to automatic mode or manual mode.
The turn indicator automatic switch-off strategy is implemented based on calculation of leaning angle, vehicle speed and run distance.

- Use buttons (1) and (2) from the Interactive Menu to select the “Setting menu” item and press ENTER (3).
- Select the “Turn indicators” item and press ENTER (3).

“Auto-off” and “Manual-off” are displayed in the middle. While the current status of the function is shown on the right.
Use buttons (1) and (2) to scroll and select the desired status. Press ENTER (3) to confirm.

Note

In case of battery disconnection, the automatic mode is set.

Automatic switch-off:
The turn indicators switch off automatically after the turn, as calculated based on vehicle speed, lean angle and in general according to the analysis of vehicle dynamic conditions.

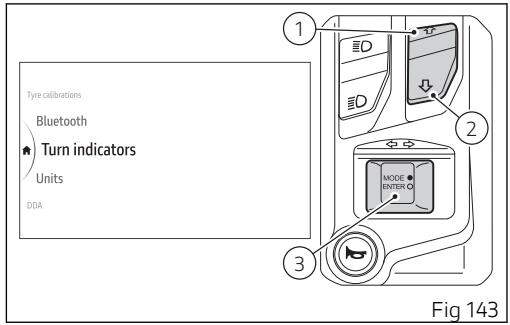

Fig 143

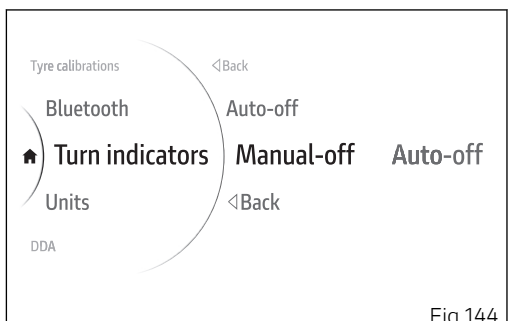

Fig 144

This means that automatic switch-off is triggered when vehicle speed exceeds 12.4 mph (20 km/h) after the turn indicator button was pressed.
Turn indicators also switch off automatically if they remained on for a long mileage, which can range between 656-6562 feet (200 and 2000 meters), depending on vehicle speed when the turn indicator button was pressed.
If the turn indicator switch is again operated, while turn indicator is still on, automatic switch-off feature is re-initialized.

Setting menu - Units

This function allows setting the units of measurement used by the instrument panel.

- Use buttons (1) and (2) from the Interactive Menu to select the “Setting menu” item and press ENTER (3).
- Select the “Measurement Units” item and press ENTER (3).

The following items are displayed in the middle: “Speed”, “Temperature”, “Consumption” and “Default” (visible only if one or more measurement units have been changed). The measurement unit currently set for the selected item is shown on the right.
Use buttons (1) and (2) to scroll and select the desired item. Press ENTER (3) to access the setting page.

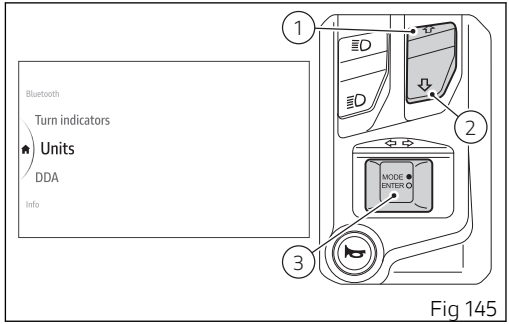

Fig 145

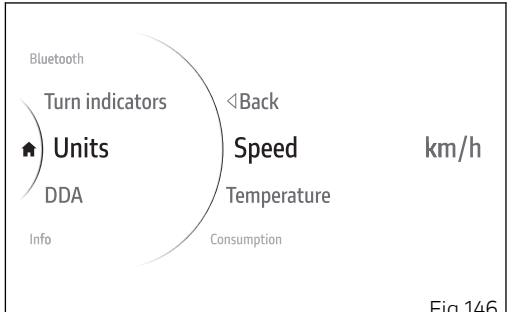

Fig 146

Speed

To set the speed measurement unit:

- Use buttons (1) and (2) from the Interactive Menu to select the “Setting menu” item and press ENTER (3).
- Select the “Measurement Units” item and press ENTER (3).
- Select the “Speed” item and press ENTER (3) (Fig 146).

Options “km/h”, “mph” and “Default” are listed (visible only if the measurement unit has been previously changed). The currently set unit of measurement is shown on the right-hand side of the display.
Use buttons (1) and (2) to scroll and select the desired item. Press ENTER (3) to confirm and return to the previous screen.

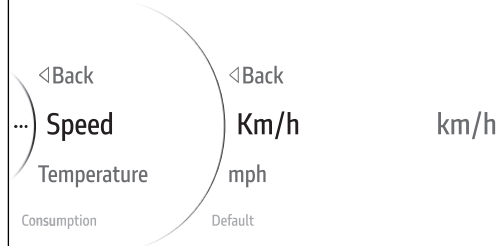

Fig 147

Temperature

To set the temperature measurement unit:

- Use buttons (1) and (2) from the Interactive Menu to select the “Setting menu” item and press ENTER (3).
- Select the “Measurement Units” item and press ENTER (3).
- Select the “Temperature” item and press ENTER (3).

Options “°C”, “°F” and “Default” are listed (visible only if the measurement unit has been previously changed). The currently set unit of measurement is shown on the right-hand side of the display.
Use buttons (1) and (2) to scroll and select the desired item. Press ENTER (3) to confirm and return to the previous screen.

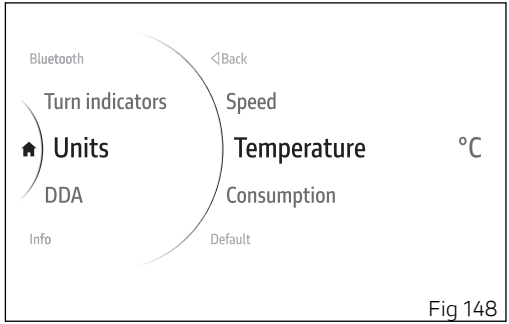

Fig 148

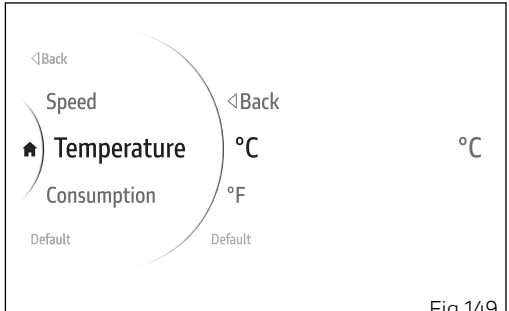

Fig 149

Consumption

To set the consumption measurement unit:

- Use buttons (1) and (2) from the Interactive Menu to select the “Setting menu” item and press ENTER (3).
- Select the “Measurement Units” item and press ENTER (3).
- Select the “Consumption” item and press ENTER (3).

Options “L/100”, “km/l”, “mpg UK”, “mpg US” and “Default” are listed (visible only if the measurement unit has been previously changed). The currently set unit of measurement is shown on the right-hand side of the display.
Use buttons (1) and (2) to scroll and select the desired item. Press ENTER (3) to confirm and return to the previous screen.

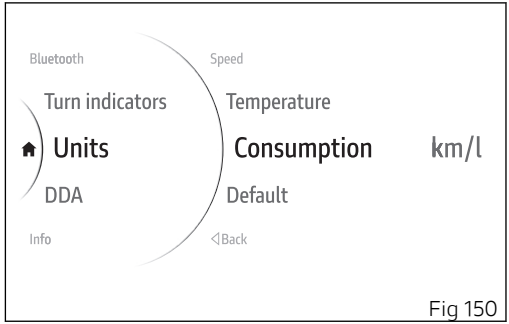

Fig 150

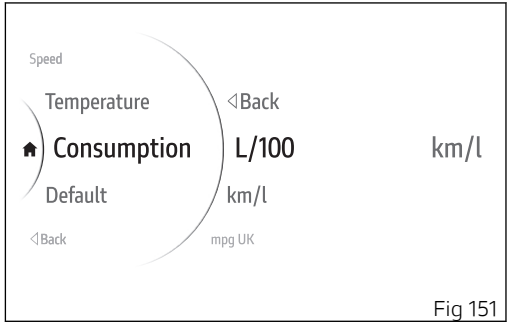

Fig 151

Restoring the unit of measurement

You can restore all or a single unit of measurement.

To restore all measurement units:

- Use buttons (1) and (2) from the Interactive Menu to select the “Setting menu” item and press ENTER (3).
- Select the “Measurement Units” item and press ENTER (3).
- Select the “Default” item and press ENTER (3). The instrument panel displays “Wait...” for a few seconds followed by “Default restored”, then “Default” disappears from the menu list.

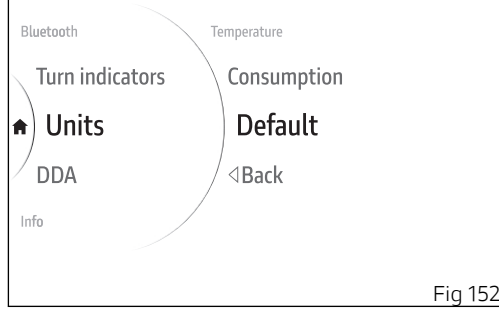

Fig 152

To restore a single unit of measurement:

- Use buttons (1) and (2) from the Interactive Menu to select the “Setting menu” item and press ENTER (3).
- Select the “Measurement Units” item and press ENTER (3).
- Select the value to be restored (e.g. speed) and press ENTER (3).
- Select the “Default” item and press ENTER (3). The instrument panel displays “Wait...” for a few seconds followed by “Default restored”, then “Default” disappears from the menu list.

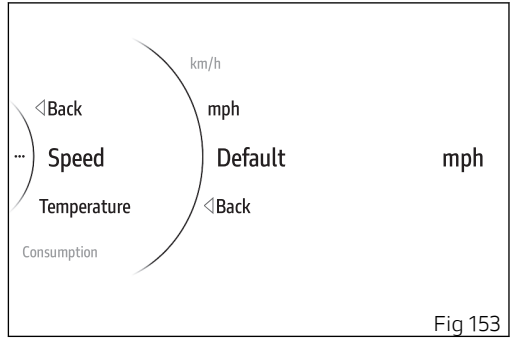

Fig 153

Setting menu - DDA

This function is visible if the DDA device has been connected to the bike and allows you to enable and disable the DDA, view the percentage of memory used and delete data stored in the DDA memory.

- Use buttons (1) and (2) from the Interactive Menu to select the “Setting menu” item and press ENTER (3).
- Select the “DDA” item and press ENTER (3).

The items "Off”, “On” and “Memory” are displayed, while the right side shows the current status of the function.

Use buttons (1) and (2) to scroll and select the desired item. Press ENTER (3) to confirm.

Note

The DDA is automatically disabled by the instrument panel upon every key-off.

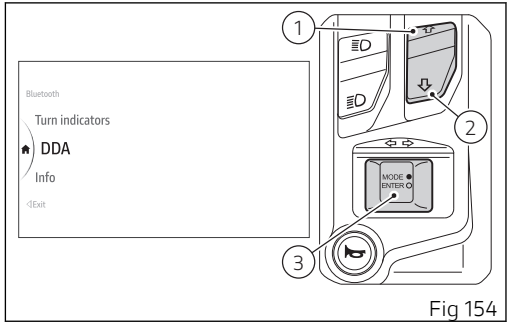

Fig 154

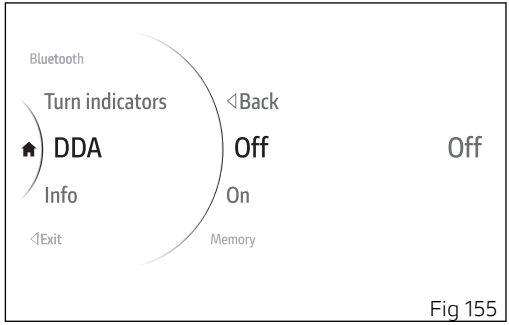

Fig 155

Memory

This function allows viewing and erasing DDA stored information.

- Use buttons (1) and (2) from the Interactive Menu to select the “Setting menu” item and press ENTER (3).
- Select the “DDA” item and press ENTER (3).
- Select the “Memory” item and press ENTER (3).

When opening the function, the message “Empty” will be displayed if memory is empty. If not, memory status is displayed as a percentage and a progress bar, together with item “Erase”. The message "Full" will be displayed if memory is full.
Select the "Erase" item and press the ENTER button (3) to delete all stored data.

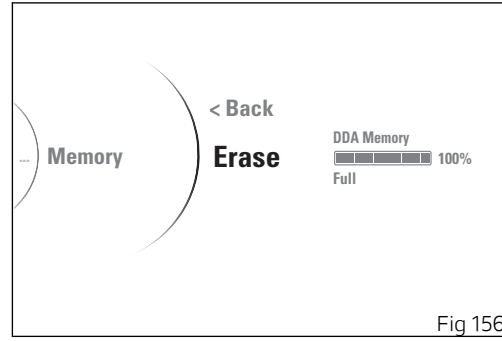

Fig 156

Setting menu - Info

This function allows displaying the next due services.

- Use buttons (1) and (2) from the Interactive Menu to select the “Setting menu” item and press ENTER (3).
- Select the “Info” item and press ENTER (3).

The display shows the information concerning the battery and engine rpm in a digital format.
Press ENTER (3) to quit.

Note

This function does not allow changes to be made.

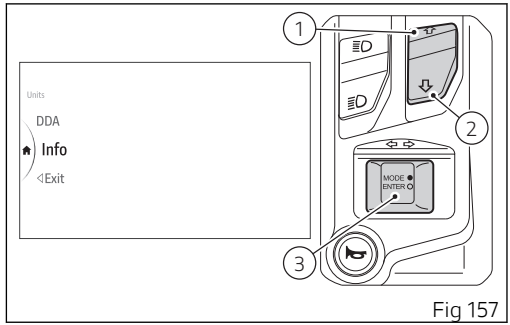

Fig 157

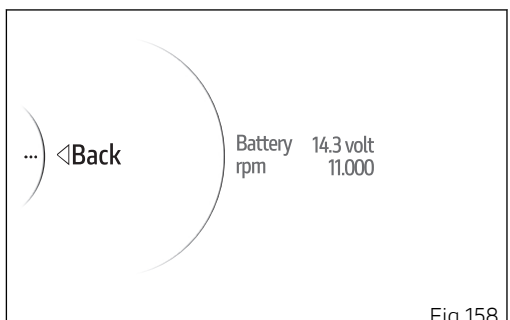

Fig 158

Ducati Link app connection

If a smartphone with the Ducati Link app is connected via Bluetooth, the relevant icon (A) is displayed on the instrument panel.
When icon (A) flashes, it indicates that the route is being recorded by the Ducati Link app.

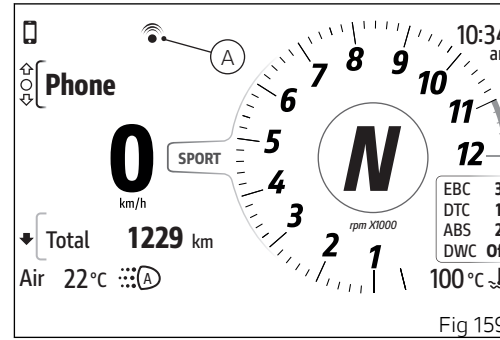

Fig 159

Saving the Ducati Link configuration

This function allows you to save the bike configuration selected on the Ducati Link app on your smartphone.
It is necessary to:

- have previously paired the smartphone to the instrument panel via Bluetooth (page 13);
- have the Bluetooth connection active on your smartphone;
- have the paired smartphone connected;
- have the Ducati Link function activated on the smartphone.

If changes have been made to the bike configuration on the Ducati Link app, follow the instructions indicated by the app to send the configuration to the connected instrument panel.
A screen is then displayed asking if you want to save the configuration made on the Ducati Link app (Fig 160).
Using buttons (1) and (2) select the item “No” to abort the operation by pressing ENTER (3), or “Yes” and press ENTER (3) to continue.

Fig 160

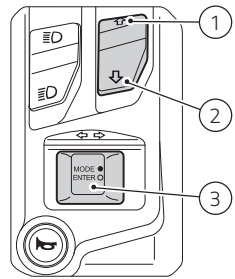

Fig 161

The following waiting screen is then displayed during which the configuration is saved (Fig 162).
If successful, the message “Successfully updated” (Fig 163) is displayed for a few seconds, after which the instrument panel returns to the screen displayed prior to function activation.
In case of errors during the configuration saving, the message “Error” is displayed for a few seconds, then the instrument panel returns to the screen displayed before the function activation.

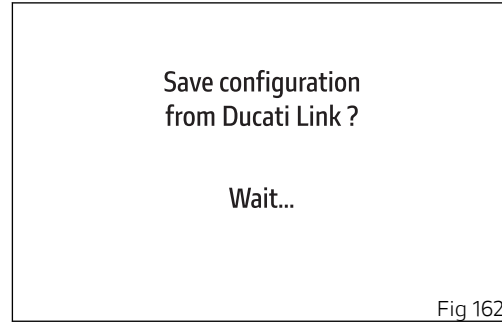

Fig 162

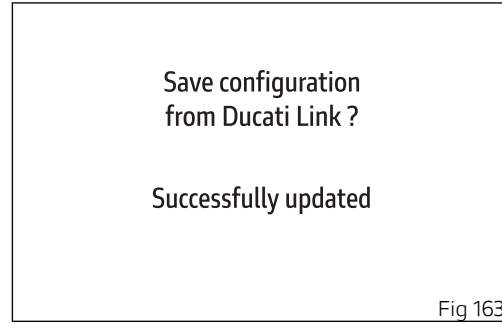

Fig 163

Warning displaying

The instrument panel manages a number of warnings and alarms, aimed at giving useful information to the rider during use.
Upon key-on, if there are any active warnings, the instrument panel will display the messages for all the present warnings or alarms: in a large size (A) for the first 5 seconds and then in a smaller size (B).
When several warnings or alarms are active, they are displayed in a sequence, one every 3 seconds.

In the following figures, the warnings are shown on the left in the large version and on the right in the small version.

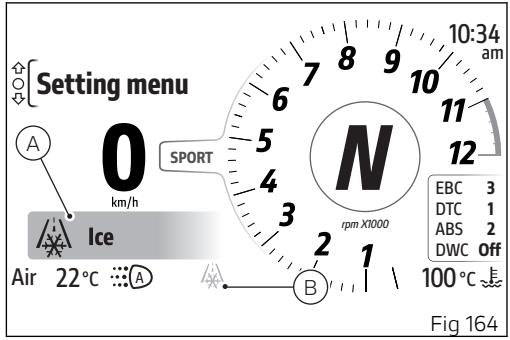

Fig 164

Ice (C, Fig 165)

Yellow, it means that there might be ice on the road, due to a low temperature. Warning is activated when the instrument panel detects a temperature of 4°C (39°F) or lower than that. Warning will be disabled as soon as temperature rises up to 6°C (43°F).

Attention

This warning does not exclude the fact that there may be some ice on the road also if temperature is higher than 4 °C (39 °F). When the temperature is low, it is recommended to always ride with great care, especially on path sections not under the sun and/or bridges.

Set date (D, Fig 165)

The yellow color indicates that the date must be entered using the "Date and time" function in the "Setting menu" (page 164).

Low battery (E, Fig 165)

Red, it indicates that the vehicle battery voltage is low, i.e. lower than or equal to 11.0 Volt.
Ducati recommends charging battery in the shortest delay using the special instrument as engine could not be started.

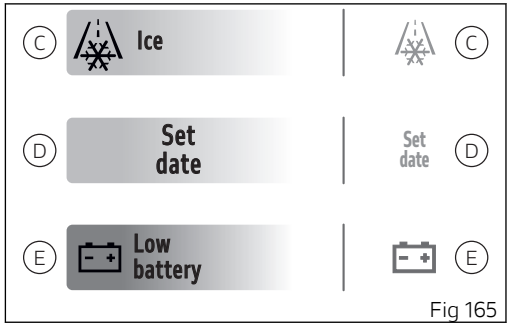

Fig 165

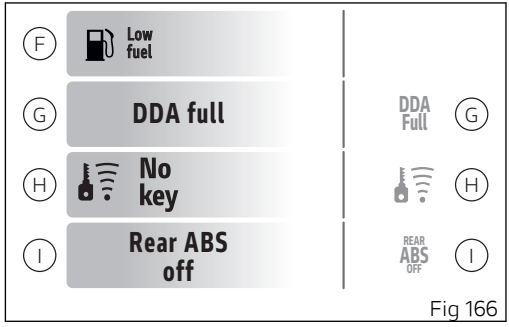

Fig 166

Low fuel (F, Fig 166)

Yellow, it indicates that the fuel level is low. There is no small version of the warning.

Note
When the fuel is low, the relevant indicator is forced in the remaining km or mile mode.

DDA memory full (G, Fig 166)

Yellow indicates that the DDA device memory is full and therefore it is no longer possible to store further trip data; therefore it is necessary to delete data using the DDA function in the Setting Menu (page 186).

Key not acknowledged (H, Fig 166)

Yellow indicates that the inserted key was not acknowledged.

Rear ABS disabled (I, Fig 166)

Yellow indicates that the level set for ABS makes it active on the front wheel only. To change the ABS level, refer to sub-section “Setting menu - Riding Mode - ABS” (page 129).

Error warnings

The instrument panel manages error warnings in order to allow the rider to identify any abnormal bike behavior in real time.
If there is an error, the instrument panel shows the indication in red on the main screen, in large format (A) for the first 10 seconds and then in small format (B).
The warning then remains active until the error is resolved.
When several errors are active, they are displayed in a sequence, one every 5 seconds.

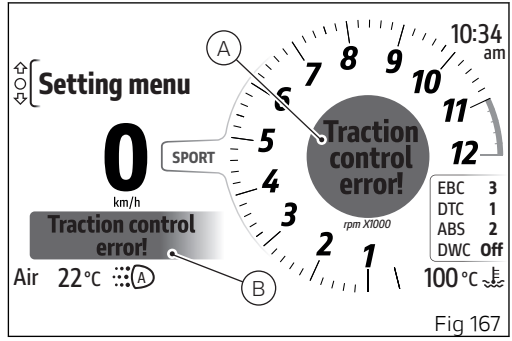

Fig 167

Traction control error! (Fig 168)

Activation of this error indicates that it is necessary to go to a Ducati Authorized Service Center as the vehicle Traction Control is in error.

ABS error! (Fig 169)

Activation of this error indicates that it is necessary to go to a Ducati Authorized Service Center as the vehicle ABS is in error.

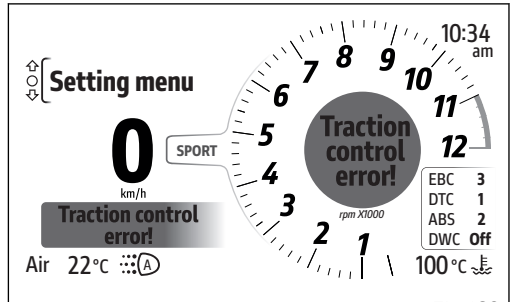

Fig 168

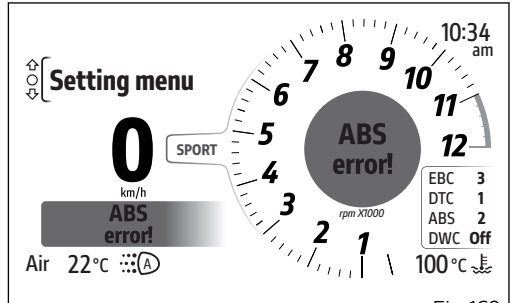

Fig 169

Main use and maintenance operations

Removing the fairings

Some parts of the motorcycle fairing have to be removed for certain maintenance or repair operations.

Attention

Failed or incorrect refitting of one of the removed components could cause its sudden detachment while riding resulting in loss of control of the motorcycle.

Attention

At every reassembly, to avoid damaging the painted areas, always place the nylon washers at the retaining screws.

Important

Have the fairings removed at a Ducati Dealer or Authorized Service Center.

"Checking coolant level and topping up, if necessary"

Check the level according to the intervals indicated in the tables in "Scheduled maintenance chart".
Check coolant level in the expansion reservoir, on the right side of the vehicle, through the inspection slot on side fairing, at the indicated position.
Check that the level is between the MAX and MIN marks on the inspection slot (RH side).
Top up if the level is below the MIN mark.

Attention

Place the motorcycle upright on a flat surface and make sure the engine is cold before proceeding.

Important

Have the top-up performed at a Ducati Dealer or Authorized Service Center.

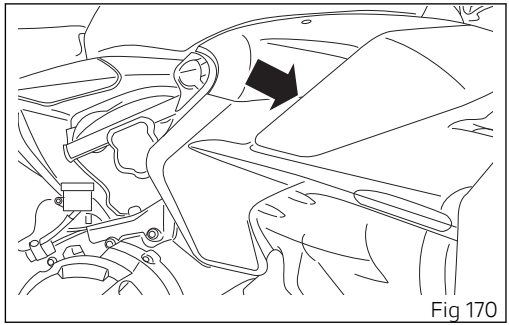

Fig 170

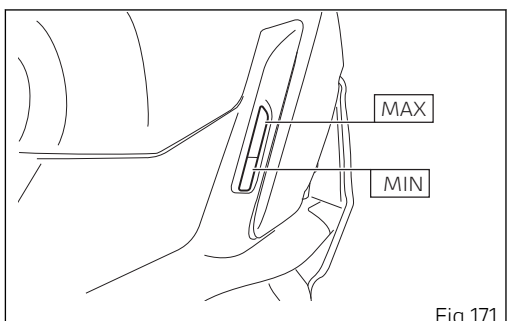

Fig 171

Checking brake and clutch fluid level

The levels should not fall below the MIN marks on the respective reservoirs.
If level drops below the limit, air might get into the circuit and affect the operation of the system involved.
Brake and clutch fluid must be topped up and changed at the intervals specified in the scheduled maintenance chart under “Scheduled maintenance”; please contact a Ducati Dealer or Authorized Service Center.

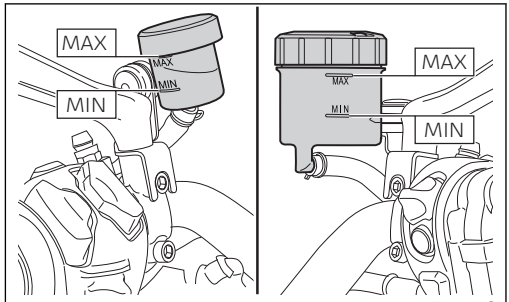

Fig 172

Brake system

If you note too much play on brake lever or pedal and brake pads are still in good condition, contact your Ducati Dealer or Authorized Service Center to have the system inspected and any air drained out of the circuit.

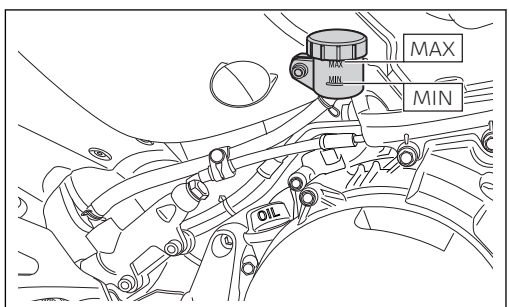

Fig 173

Clutch system

If the control lever has too much play and the transmission snatches or jams as you try to engage a gear, it means that there might be air in the circuit. Contact your Ducati Dealer or Authorized Service Center to have the system inspected and air drained out.

Attention

Brake and clutch fluid can damage paintwork and plastic parts, so avoid contact.
Hydraulic oil is corrosive; it may cause damage and lead to severe injuries. Never mix fluids of different qualities. Check seals for proper sealing.

Attention

Clutch fluid level will increase as clutch plate friction material wears down. Do not exceed the specified level (3 mm (0.12 in) above the minimum level).

Checking brake pads for wear

Check brake pads wear through the inspection hole in the calipers. If the thickness of the friction material, even in just one pad, is about 0.04 in (1 mm) replace both pads.

Attention

Friction material wear beyond this limit would lead to metal support contact with the brake disc thus compromising braking efficiency, disc integrity and rider safety.

Important

Have the brake pads replaced at a Ducati Dealer or Authorized Service Center.

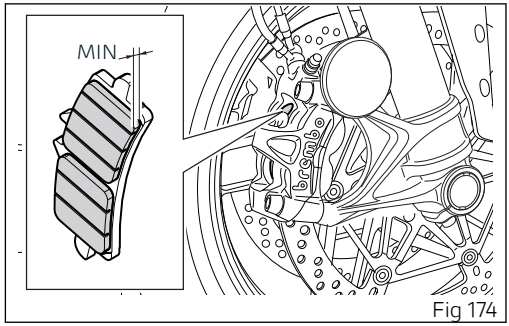

Fig 174

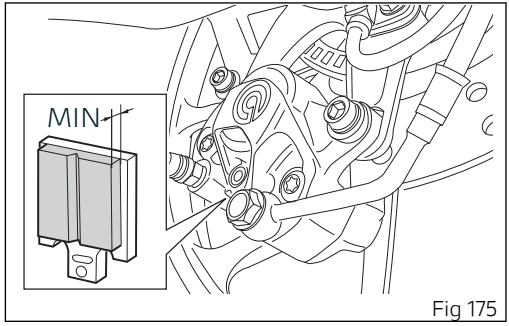

Fig 175

Charging the battery

Before charging the battery, it is best to remove it from the bike.

Removing the battery

- Remove the left-hand side fairing;
- undo the screw (1) and remove the battery mounting cover (2).
- remove battery (3) from its seat;
- always starting from the negative terminal (-), loosen the screws (4).
- remove the negative cable (7) and engine ground cable (8) from the negative terminal;
- remove the positive cable (5) and ABS positive cable (6) from the positive terminal.

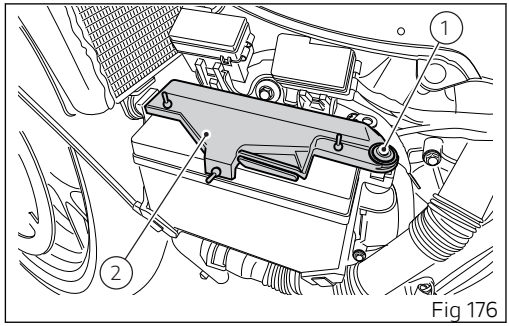

Fig 176

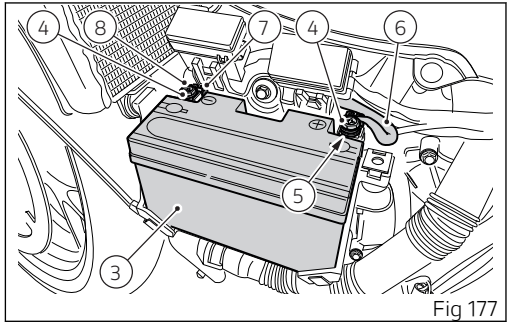

Fig 177

Refitting the battery

- Lay down the ABS positive cable (6), onto positive cable (5) and start screw (4) on these cables;

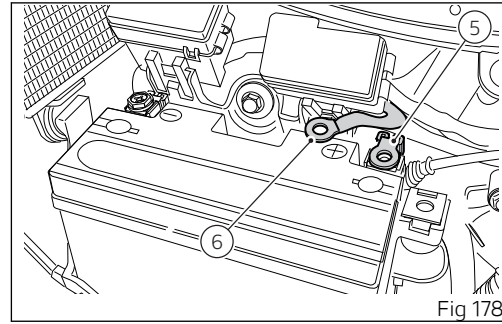

Fig 178

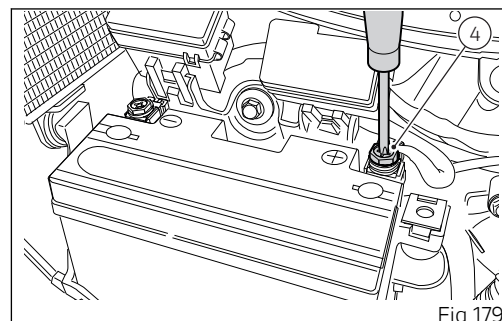

Fig 179

- lay down the engine ground cable (8), onto negative cable (7) and start screw (4) on these cables;
- tighten the terminal retaining screws (4);
- apply grease around the battery terminals to prevent oxidation.
- reinstall the battery (3) in the support, positioning the cables as shown in (Fig 177);
- refit battery mounting cover (2) and fasten it by tightening the screw (1).
- refit the left-hand side fairing.

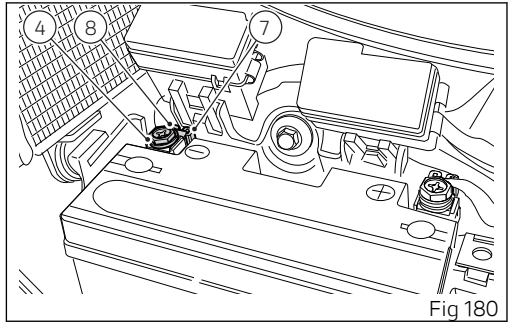

Fig 180

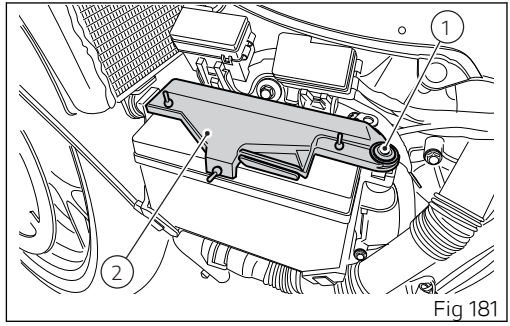

Fig 181

- Connect the battery charger leads to the battery terminals: the red one to the positive terminal (+), the black one to the negative terminal (-).
- Charge the battery at 0.9 A for 5÷10 hours.

Attention
Keep the battery out of the reach of children.

Important
Make sure the charger is off when you connect the battery to it, or you might get sparks at the battery terminals that could ignite the gases inside the cells. Always connect the red positive (+) terminal first.

Attention
The battery gives off explosive gases; keep it away from any source of ignition such as sparks, flames and cigarettes. Charge the battery in a well-ventilated area.

Attention
If the vehicle cannot be started because of a fully flat battery, the bike cannot be started by connecting an external starter or battery in parallel. The battery charger, in fact, is not designed to ensure proper supply voltage to the engine electronics (including ignition/injection system) with fully flat battery.
This could result in a serious operational issue. Please replace the battery or charge and check it before using the bike.

Attention
Never start the bike by pushing it.

Checking drive chain tension

Important

Have chain tension adjusted by a Ducati Dealer or Authorized Service Center.

- Turn the rear wheel until you find the position where chain is tightest;
- with a finger, push down the chain at the point of measurement and release;
- set the vehicle on the side stand;
- measure the distance (A) between the centers of the chain pin, placing the tape measure between the plastic and the swinging arm in front of the retaining screw (B):
  A = 1.81÷1.89 in (46÷48 mm).
  A (Taiwan version only) = 38÷40 mm (1.50÷1.57 in).

Important

This only applies to the motorcycle standard settings, available upon delivery.

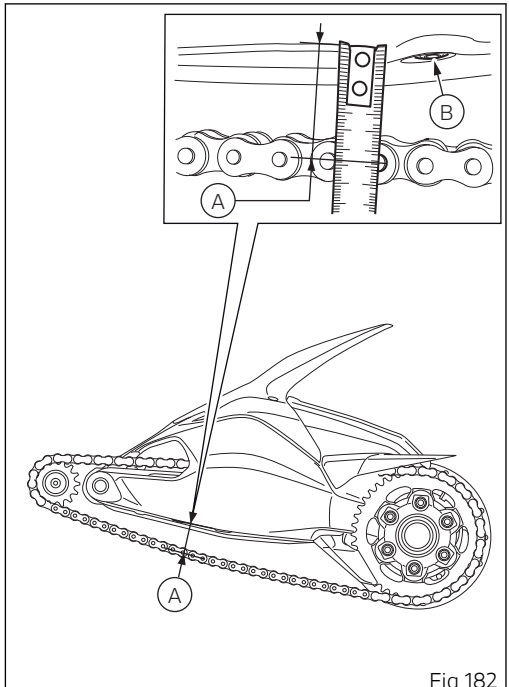

Fig 182

Attention

Correct tightening of swinging arm screws (1) is critical to rider safety.

Important

Improper chain tension will lead to rapid wear of transmission parts.

Important

To ensure the best performance and long life of the chain, please follow the information related to chain cleaning, lubrication, inspection and tensioning.

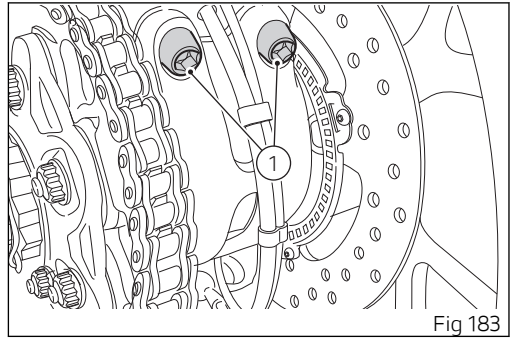

Fig 183

Lubricating the drive chain

Important

Have drive chain cleaned by a Ducati Dealer or authorized Service Center.

Attention

Carry out these inspection operations with the engine off, the vehicle at a standstill, on a flat ground and on the stand.

Cleaning

Before proceeding with the chain lubrication it is important to correctly wash and clean it.
The chain cleaning is extremely important for its duration. In fact, it is necessary to remove any mud, soil, sand or dirt from the chain first using a soft damp cloth (1) to soften the most resistant dirt and then with a jet of water and then dry it immediately using compressed air at a distance of at least 11.81 in (30 cm).

Checking the chain

The chain fitted on your motorcycle has O-rings to protect its moving parts from dirt and to hold the lubricant inside.

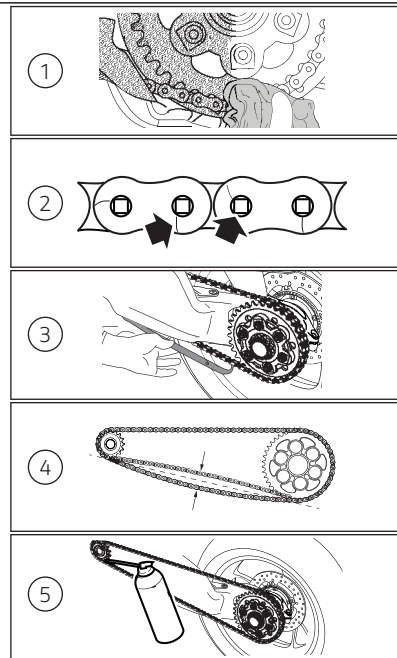

Fig 184

Check the chain for wear by checking the links at the points indicated (2).

Attention

Avoid the use of steam, fuel, solvents, hard brushes or other methods that could damage the O-rings; also avoid direct contact with the battery acid as it could cause mini cracks in the links as shown in the figure.

Attention

In particular, in case of Off-Road use of the bike, it is possible that excessive wear of the links occurs due to the contact with the chain sliding shoe; friction could in fact cause the chain to overheat, altering the heat treatment of the links and making them particularly fragile.

Checking the sliding shoe

Check the wear of the sliding shoe (3) and, if necessary, contact a Ducati Dealer or Authorized Service Center.

Checking the tension

Check the chain tension (4) as indicated in the sub-section “Checking the drive chain tension”.
Have the chain tension adjusted by a Ducati Dealer or authorized Service Center.

Lubrication

Important

Have drive chain cleaned by a Ducati Dealer or authorized Service Center.

Attention

Use SHELL Advance Chain to lubricate the chain; the use of non-specific lubricants could damage the O-rings and therefore the entire drive system.

It is recommendable to lubricate (5) the chain without waiting for it to cool down after using the motorcycle, so that the new lubricant can penetrate better between the inner and outer links and be more effective in its protective action.

Place the bike on the rear paddock stand. Make the rear wheel turns fast in the opposite direction to the direction of travel.

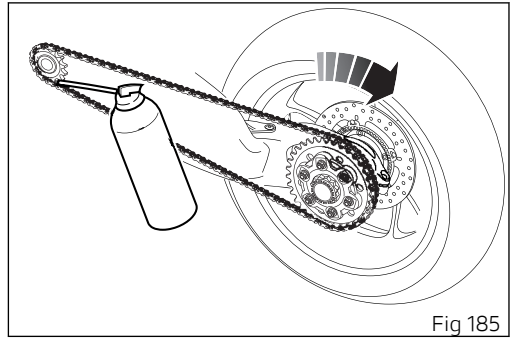

Fig 185

Apply the lubricant jet (1) inside the chain between the inner and outer links, in point (2) immediately before the engagement point on the sprocket.

Due to the centrifugal force, the lubricant, made fluid by the solvents contained in the spray, will expand in the working area between the pin and the bush, ensuring perfect lubrication.

Repeat the operation by aiming the lubricant jet to the central part (5) of the chain so as to lubricate the rollers (4), and to the outer plates (6) as shown in the figure.

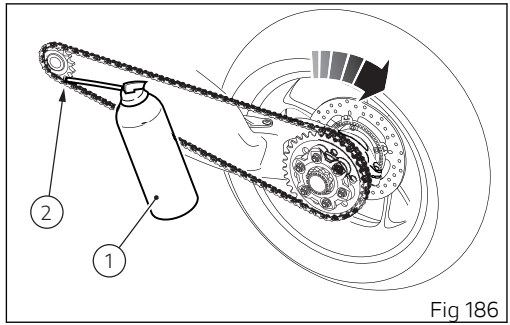

Fig 186

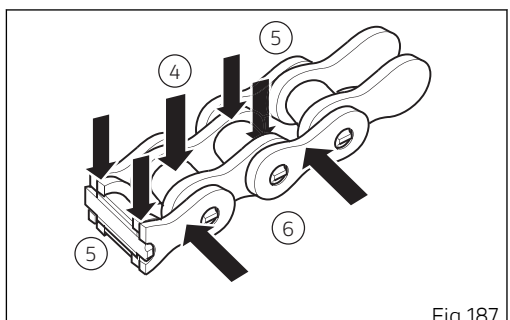

Fig 187

After lubrication, wait 10-15 minutes to allow the lubricant to act on the internal and external surfaces of the chain and then remove the excess lubricant with a clean cloth.

Important

Do not use the motorcycle immediately after lubricating the chain as the lubricant, still fluid, would be centrifuged outwards causing possible soiling of the rear tire or the rider's footpeg.

Important

Check the chain often, taking care to lubricate it, as also indicated in the table below: at least every 1000 km (621 mi) or more frequently (about every 400 km (248 mi)) when using the bike with high outside temperatures (40°C) or after long travels on the highway at high speed.

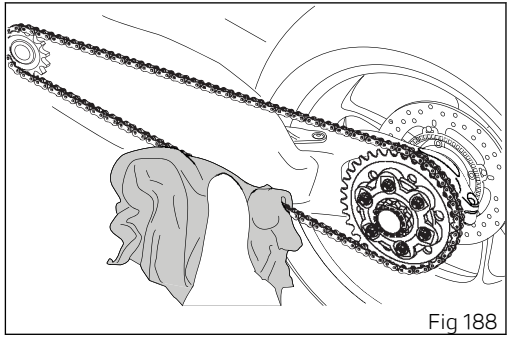

Fig 188

Replacing the high and low beam bulbs

The whole front LED headlight assembly is maintenance-free. Figure shows the locations of the high beam (HI), low beam (LO) and parking lights (1). Have the lights replaced at a Ducati Dealer or authorized Service Center.

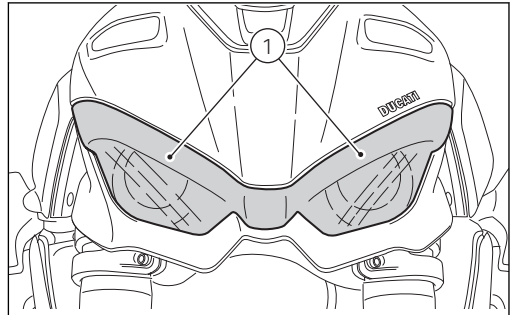

Fig 189

Turn indicators

Follow the same procedure for front and rear turn indicators.
To change the rear turn indicator bulbs, loosen the screw (1), remove the lens (2), and slide the bulb out of the joint.
The bulb is the banjo-type: press and rotate counterclockwise to remove.
Fit the spare bulb by pressing and turning clockwise until it clicks.
Refit lens (2) and secure it to turn indicator support by tightening screw (1).

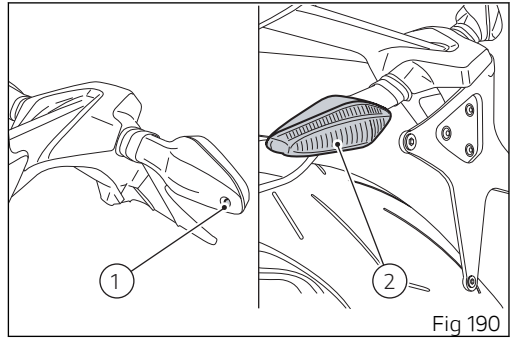

Fig 190

Aligning the headlight

Note

The procedure described here is in compliance with the Italian Standard establishing the maximum height of the light beam. Owners in other countries will adapt said procedure to the provisions in force in their countries.

Check correct headlight aiming. Position the bike 32.8 ft (10 m) from a wall or a screen, the bike must be perfectly upright with the Tires inflated to the correct pressure and with a rider seated, perfectly perpendicular to the longitudinal axis. Draw a horizontal line corresponding to the center of the headlamp and a vertical one in line with the longitudinal axis of bike. If possible, perform this check in dim light. Switch on the low beam and adjust right and left beams by alternatively covering the right one while adjusting the left one and vice versa: the height of the upper limit between the dark area and the lit area must not be more than 9/10 of the height from the ground of the headlight center.

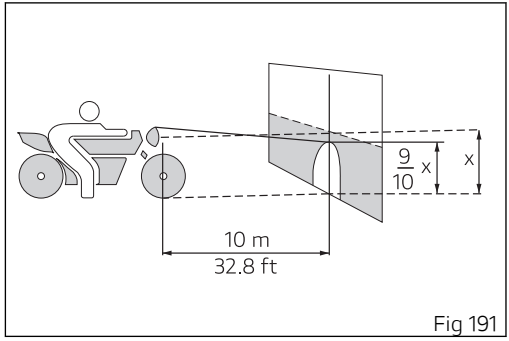

Fig 191

To align the headlight beam, turn the screws (1) and (2) located at the front of the vehicle, on both sides.

Screw (1), positioned on the left side, acts on the left high and low beams:

- turn clockwise to lower the light beam;
- turn counter clockwise to raise the light beam.

Screw (2), positioned on the right side, acts on the right high and low beams:

- turn clockwise to lower the light beam;
- turn counter clockwise to raise the light beam.

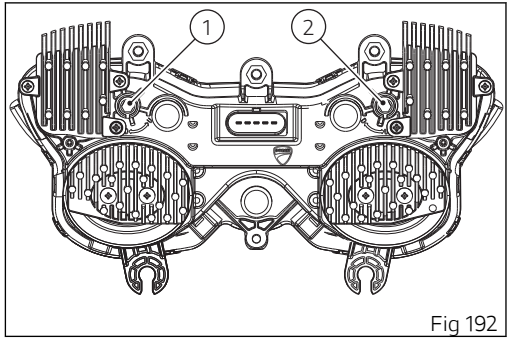

Fig 192

Attention

The headlight might fog up if the vehicle is used under the rain or after washing. Switch headlight on for a short time to dry up any condensate.

Adjusting the rear-view mirrors

Manually adjust rear-view mirror (A) to required position.

Attention

This type of adjustment must be performed with attention to avoid forcing the rear-view mirror position and damaging it.

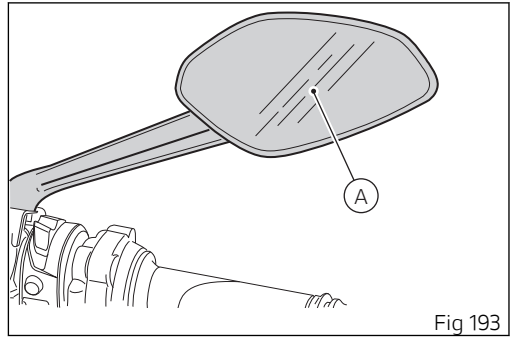

Fig 193

Tubeless tires

For information on tire type and inflation pressure, see the "Tires" sub-section in the "Technical specifications" section. Pressure
As tire pressure is affected by ambient temperature and altitude variations, you are advised to check and adjust it whenever you are riding in areas where ample variations in temperature or altitude occur.

Attention

Check and set tire pressure when tires are cold. To avoid front wheel rim distortion, when riding on bumpy roads, increase tire pressure by 0.2 ÷ 0.3 bar (2.90÷4.35 psi).

Tire repair or change (Tubeless tires)

In the event of a tiny puncture, tubeless tires will take a long time to deflate, as they tend to keep air inside. If you find the pressure low in one tire, check the tire for punctures.

Attention

Punctured tires must be replaced. Replace the tires with recommended standard tires only. Be sure to tighten the valve caps securely to avoid leaks when riding. Never use tube type tires. Failure to heed this warning may lead to sudden tire bursting and to serious danger to rider.

After replacing a tire, the wheel must be balanced.

Attention

Do not remove or move the counterweights for wheel balancing.

Note

Have the tires replaced at a Ducati Dealer or Authorized Service Center. Correct removal and installation of the wheels is essential. Some parts of the ABS (such as sensors and phonic wheels) are mounted to the wheels and require specific adjustment.

Minimum tread depth

Measure tread depth (S) at the point where tread is most worn down: It should not be less than 0.08 in (2 mm), and in any case not less than the legal limit.

Important

Visually inspect the tires at regular intervals for detecting cracks and cuts, especially on the side walls, bulges or large spots that are indicative of internal damage. Replace them if badly damaged. Remove any stones or other foreign bodies caught in the tread.

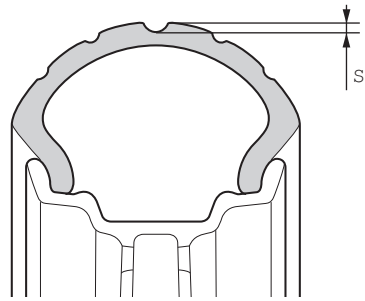

Fig 194

Check engine oil level

Engine oil level can be checked through the sight glass (1) located on the left side of the engine block. Oil level should be between the marks on the sight glass. If the level is low, top up with engine oil.
Ducati prescribes the only use of SAE 15W-50/JASO MA2 oil and recommends the use of Shell Advance DUCATI 15W-50 Fully Synthetic Oil.
Remove the oil filler cap (2) located on the right side of the vehicle and top up until the oil reaches the required level. Refit the filler plug (2).

Attention

Engine oil and oil filters must be changed by a Ducati Dealer or Authorized Service Center at the intervals specified in this booklet in chapter "Scheduled maintenance plan".

To check the oil level correctly, carefully follow the instructions below.
1) The level should be checked at warm engine, about 15 minutes after the engine has been stopped.
2) Position the bike with both wheels on a flat ground and in straight position.
3) Then, check the engine oil through the sight glass.

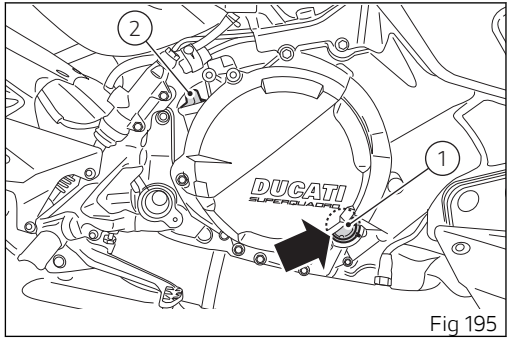

Fig 195

4) If the oil level is below the middle line between the MIN and MAX marks, add oil until reaching the maximum level indication.

Attention

Never exceed the MAX mark.

Recommendations concerning oil

It is recommended to use oil complying with the following specifications:

- viscosity grade SAE 15W-50.

SAE 15W-50 is an alphanumerical code identifying oil class based on viscosity: two figures with a W ("winter") in-between; the first figure indicates oil viscosity at low temperature; the second figure indicates its viscosity at high temperature.

Use of Ducati Corse Performance Oil by Shell

Attention

The use of Ducati Corse Performance Oil by Shell is not allowed on this model as it would damage the engine.
The Ducati Corse Performance Shell Advance oil is made exclusively for Desmosedici Stradale engines equipped with dry clutch.

Cleaning the motorcycle

To preserve the finish of metal parts and paintwork, wash and clean your motorcycle at regular intervals according to the road conditions you ride in. Use specific products only. Prefer biodegradable products. Avoid harsh detergents or solvents.
Only use water and neutral soap to clean the Plexiglas and the seat.
Periodically manually clean all aluminum components. Use special detergents, suitable for aluminum parts FREE of abrasives or caustic soda.

Note

Do not use sponges with abrasive parts or steel wool: only use soft cloths.

In any case, the Warranty does not apply to motorcycles whenever poor maintenance status is ascertained.

Important

Do not wash your motorcycle right after use. When the motorcycle is still hot, water drops will evaporate faster and spot hot surfaces.
Never clean the motorcycle using hot or high-pressure water jets.
Cleaning the motorcycle with a high pressure water jet may lead to seizure or serious faults in the front fork, wheel hub assembly, electric system, headlight (fogging), front fork seals, air inlets or exhaust mufflers, with resulting loss of compliance with safety requirements.
Clean off stubborn dirt or exceeding grease from engine parts using a degreasing agent. Be sure to avoid contact with drive parts (chain, sprockets, etc.).

Rinse with warm water and dry all surfaces with chamois leather.

Attention

Braking performance may be impaired immediately after washing the motorcycle. Never grease or lubricate the brake discs to avoid losing braking power. Clean the discs with an oil-free solvent.

Attention
The headlight might fog up due to washing, rain or moisture. Switch headlight on for a short time to help and dry up any condensate.

Carefully clean the phonic wheels of the ABS to ensure system efficiency. Do not use aggressive products in order to avoid damaging the phonic wheels and sensors.

Take special care in regularly cleaning the wheel rims since they contain some machined aluminum parts; clean and dry them any time you use the vehicle.

Important
To clean and lubricate the drive chain, refer to the paragraph “Lubricating the drive chain”.

Attention
Avoid direct contact between instrument panel lens and oils/fuels that may stain or damage it thereby impairing information readability. To clean such parts, do not use alcohol-based detergents, containing solvent or abrasive agents; do not use sponges or cloths featuring hard or rough areas since they might scratch the surface.

Note
Clean instrument panel lens using soft cloths with water and mild soap or detergents specific for cleaning clear plastic parts.

Note
To clean the instrument panel do not use alcohol or its by-products.

Important
Composite components, particularly structural components designed for high-temperature applications (e.g. swinging arm), are by their very nature subject to color changes due to time, exposure to atmospheric agents and/or heat sources. Such components can therefore change their coloring and/or general appearance over time and such changes are not an indication of non-conformity or degradation of the material and/or product and/or component, nor can such a change be considered an aesthetic defect (being a peculiar characteristic of the material), nor a structural defect (as in no way it compromises the functionality of the component).

Cleaning and replacing the spark plugs

Spark plugs are essential to smooth engine running and should be checked at regular intervals.
Have the spark plug replaced at a Ducati Dealer or Authorized Service Center.

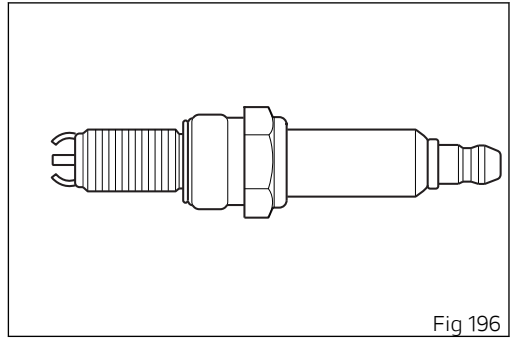

Fig 196

Storing the motorcycle

If the motorcycle is to be left unridden over long periods, you should perform the following procedures before storing it away:

- clean the motorcycle;
- empty the fuel tank;
- place the motorcycle on a service stand;
- disconnect, remove the battery and periodically charge it using the battery charge maintainer (see “Charging the battery”);
- Protect the motorcycle with a suitable canvas. This will protect paintwork and prevent retaining condensate. The canvas is available from Ducati Performance.

Important notes

Laws in some countries set certain noise and pollution standards.
Periodically carry out the required checks and replace parts as necessary using Ducati original spare parts to be in compliance with regulations in the given country.

Various electronic components of your vehicle have data memories that temporarily or permanently store technical information on the status, events and faults of the vehicle.
In general, this information documents the status of a component, module, system or environment.

- Operating status of system components (e.g. emission control system).
- Status messages of the vehicle and its components (e.g. wheel rotation speed, engine rpm, engaged gear, etc.)
- Malfunctions and faults of important system components (e.g. lights, brakes, etc.)
- Vehicle response in particular riding situations (e.g. traction control system, etc.)
- Environmental conditions (e.g. temperature, etc.)

These data are always of a technical nature and are used to detect and correct faults and optimize vehicle functions.
During service operations such as repairs, maintenance activities, operations under warranty, and quality assurance, service network personnel (including manufacturers) can read this technical information from the event and fault data memory using special diagnostic tools. Once the fault has been eliminated, it is possible to progressively

delete or overwrite the information in the fault memory.
Vehicle data are collected as a result of a service requested by the Customer or provided under a contract (on the vehicle).
Within the scope of these services, personal data are processed in compliance with current legislation on data protection, based on a legitimate interest of Ducati to ensure increasingly efficient assistance, and finally to comply with legal obligations (e.g. information obligations on repairs and maintenance). If necessary, personal data are read and used in combination with the vehicle identification number.
Our control units do not collect geolocation data.

Vehicle transport

Before transporting the bike using another vehicle, follow the safety instructions below.

1) Remove all loose objects and accessories from the vehicle;
2) Align the front wheel straight in the riding direction and lock it properly to prevent any movement;
3) Engage the first gear;
4) Use the anchoring straps and apply them to strong components (e.g. frame) and NOT to the handlebar (or handlebars, where present) or to components that could break (e.g. handgrips, rear-view mirrors, etc.);
5) The straps or ropes must NOT rub against any painted bike components;
6) The suspensions, if possible, must be in a partially compressed position so as to allow less movement of the vehicle with respect to the road surface during transport.

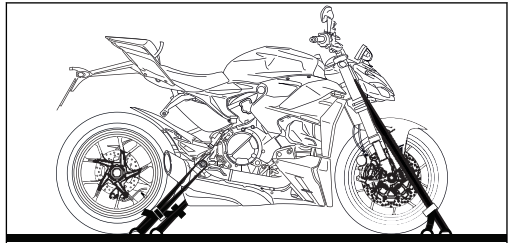

Fig 197

Do NOT attach the ropes to the handlebar.

Scheduled maintenance chart

Scheduled maintenance chart: operations to be carried out by the dealer

This scheduled maintenance chart is designed for a road use of the Streetfighter V2. If it is used on the track, even if not during sport competitions, all parts of the bike are more stressed so routine maintenance operations must be carried out more frequently than indicated.
Please contact a Ducati Dealer or authorized Service Center where you can receive customized service advice according to the sport use you make of your Streetfighter V4.

Important

Using the motorcycle under extreme conditions, such as very damp and muddy roads or dusty and dry environment, could cause above-average wear of components like the drive system, the brakes or the air filter. If the air filter is dirty, the engine could get damaged. Therefore, this might translate in required service or replacement of the wear parts earlier than specified in the scheduled maintenance chart.

	Oil Service 1000*	Oil Service*	Desmo Service*	Annual Service*	
Reading of the error memory with DDS 3.0 and check of technical updates and recall campaigns on DCS	•	•			12
Change engine oil and filter	•	•			12

	Oil Service 1000*	Oil Service*	Desmo Service*	Annual Service*	
Check and clean air filter		•			12
Change air filter			•		
Check and/or adjust valve clearance and replace valve cover aluminum screws (where fitted)			•		
Check secondary air reeds (if any)			•		
Change spark plugs			•		
Change coolant			•		48
Change front fork fluid					36
Visually check the front fork and rear shock absorber seals	•	•			12
Check brake and clutch fluid level	•	•			12
Change brake and clutch fluid					24
Check front and rear brake disc and pad wear		•			12
Check the proper tightening of front and rear brake caliper bolts and brake disk screws		•			12
Check rear brake disk screw tightening (by removing the rear wheel shaft in case of brake disk retaining screws requiring the use of hexagon wrench)			•		

	Oil Service 1000*	Oil Service*	Desmo Service*	Annual Service*	
Check tightening of front and rear wheel nuts and rear sprocket nut		•			12
Check the tightening of frame fasteners to engine, swinging arm and rear shock absorber		•			12
Check wheel hub bearings		•			12
Check the cush drive damper on rear sprocket and lubricate the rear wheel shaft			•		
Check wear of chain, chain sliders, front and rear sprockets. Check chain elongation, tension and lubrication. Detected elongation value:_____ (mm) **Note** It is recommended to change the final drive chain kit within 20,000 km/12,000 mi.	•	•			12
Check steering tube bearing clearance		•			12
Check the freedom of movement and tightening of the side stand	•	•			12
Check that all gaiters and flexible hoses in view (e.g. fuel, brake and clutch hoses, cooling system, bleeding, drainage, etc.) are not cracked, are properly sealing and positioned	•	•			12
Check free play of rear brake lever and lubricate the levers at the handlebar and pedal controls	•	•			12
Check tire pressure and wear	•	•			12

	Oil Service 1000*	Oil Service*	Desmo Service*	Annual Service*	
Check the operation of all electric safety devices (side stand and clutch sensor, front and rear brake switch, engine kill switch, gear/neutral sensor)	•	•			12
Check lighting, turn indicators, warning horn and controls for correct operation	•	•			12
Final test and road test of the bike, testing safety devices (e.g. ABS and DTC), electric fans and idling	•	•	•		12
Visually check the coolant level and sealing of the circuit	•	•	•		12
Soft cleaning of the vehicle, record the service coupon and warning light turning off on the instrument panel using the DDS 3.0 and fill out that the service was performed in on-board documentation (Service Booklet)	•	•	•		12

* The Oil Service 1000 must be carried out after the first 600 mi/1,000 km.
* The Oil Service has to be performed after the first 7,500 mi/12,000 km;
* The Desmo Service must be carried out every 15,000 mi/24,000 km.
* The Annual Service must be carried out every 12 months.

Scheduled maintenance chart: operations to be carried out by the customer

Important

Using the motorcycle under extreme conditions, such as very damp and muddy roads or dusty and dry environment, could cause above-average wear of components like the drive system, the brakes or the air filter. If the air filter is dirty, the engine could get damaged. Therefore, this might translate in required service or replacement of the wear parts earlier than specified in the scheduled maintenance chart.

List of operations and type of intervention [set mileage (km/mi) or time interval *]	Km. x1000	1
	mi. x1000	0.6
	Months	6
Check engine oil level		●
Check brake and clutch fluid level		●
Check tire pressure and wear		●
Check the drive chain tension and lubrication		●
Check brake pads. If necessary, contact your dealer to replace components.		●

* Service operation to be carried out in accordance with the specified distance or time intervals (km, miles or months), whichever occurs first.

Specifications

Weights

Overall weight (in running order without fuel): 425 lb (193 kg).
Maximum allowed weight (carrying full load): 936.96 lb (425 kg).

Attention

Failure to observe weight limits could result in poor handling and impair the performance of your motorcycle and may cause you to lose control of the motorcycle.

Overall dimensions

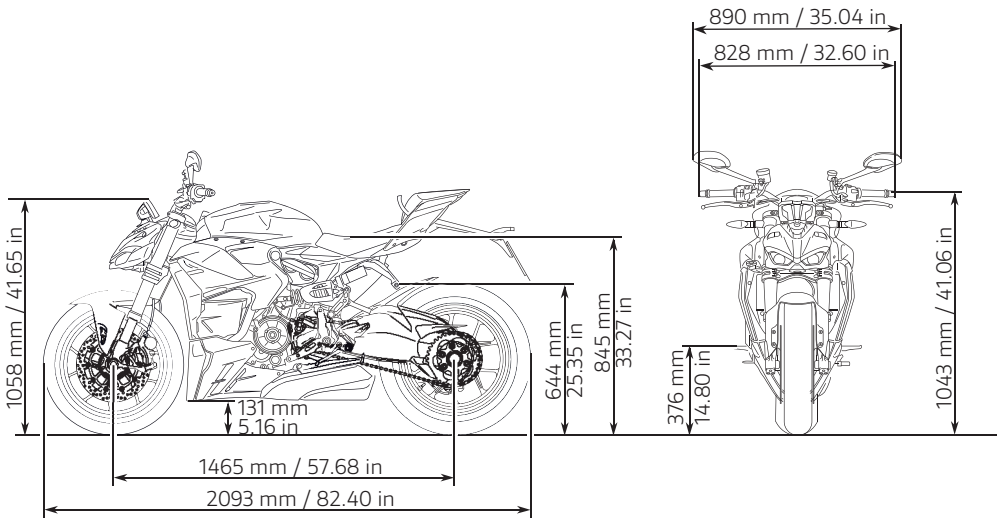

Fig 198

Top-ups

TOP-UPS	TYPE	
Fuel tank, including a reserve of 1.32 US gal (5 liters)	Ducati recommends the use of premium-grade unleaded petrol SHELL V-Power with a minimum octane rating of 90 (RON +MON)/2	4.49 US gal (17 liters)
Oil sump and filter	Ducati prescribes the only use of SAE 15W-50/JASO MA2 oil and recommends the use of Shell Advance DUCATI 15W-50 Fully Synthetic Oil.	1.00 US gal (3.8 liters)
Front/rear brake and clutch circuits	DOT 4	-
Protectant for electric contacts	Spray used to protect electric systems	-
Front fork		Oil quantity: 34.05 cu. in (558 cu. cm)
Cooling circuit	ENI Agip Permanent Spezial antifreeze (do not dilute, use pure)	0.78 US gal (2.94 liters)

Important

Do not use any additives in fuel or lubricants. Using them could result in severe damage of the engine and motorcycle components.

Attention

The vehicle is compatible only with fuel having a maximum ethanol content of 10% (E10).
Using fuel with ethanol content over 10% is prohibited. Using it could result in severe damage of the engine and motorcycle components. Using fuel with ethanol content over 10% will render the Warranty null and void.

Attention

The use of Ducati Corse Performance Oil by Shell is not allowed on this model as it would damage the engine.
The Ducati Corse Performance Shell Advance oil is made exclusively for Desmosedici Stradale engines equipped with dry clutch.

Engine

Twin cylinder, four-stroke, 90° "L" type, longitudinal, with deep sump die-cast crankcase.

Bore: 3.94 in (100 mm).

Stroke: 2.39 in (60.8 mm).

Total displacement: 58.28 cu. in (955 cu. cm).

Compression ratio: 12.5:1 ± 0.5.

Maximum power at crankshaft (EU) Regulation no. 134/2014 Annex X, kW/HP:
152.7 HP / 112.3 kW at 10750 rpm;
108.9 HP / 80.1 kW at 10000 rpm (Belgium version);
150 HP / 110 kW at 11000 rpm (Russia version).

Maximum torque at crankshaft (EU) Regulation no. 134/2014, Annex X:
10.34 Kgm / 101.4 Nm / at 9000 rpm;
8.41 Kgm / 82.5 Nm at 8750 rpm (Belgium version);
10.27 Kgm / 10.7 Nm at 9000 rpm (Russia version).

Maximum rpm: 11500 rpm.

Important

Do not exceed the specified rpm limits in any running conditions.

Note

The indicated power/torque values have been measured with a static test bench according to type-approval standards and match with the data detected during type-approval process; they are indicated in the vehicle registration document.

Lubrication

Lobe-type oil pump with built-in by-pass valve and oil cooler

Timing system

Double overhead camshaft (DOHC) driven by chain and gearwheels, 4 valves per cylinder, desmodromic system.

Desmodromic timing system

1) opening (or upper) rocker;
2) Opening rocker shim;
3) Closing (or lower) rocker shim;
4) Return spring for lower rocker;
5) Closing (or lower) rocker;
6) Camshaft;
7) Valve.

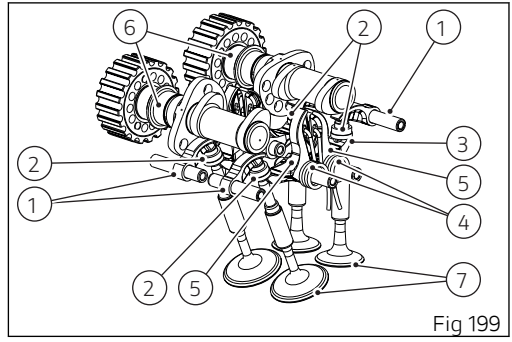

Fig 199

Performance

Maximum speed in any gear should be reached only after a correct break-in period with the motorcycle properly serviced at the recommended intervals.

Important

Failure to follow these instructions will release Ducati Motor Holding S.p.A. from any liability for any engine damage or shortened engine life.

Spark plugs

Make: NGK.
Type: MAR9A-J.

Fuel system

Inductive discharge indirect electronic injection.
Oval throttle body.
Corresponding diameter: 2.44 in (62 mm)
Injectors per cylinder: 2
Fuel with a minimum octane rating of 90 (RON +MON)/2.

Attention

The vehicle is compatible only with fuel having a maximum ethanol content of 10% (E10).
Using fuel with ethanol content over 10% is prohibited. Using it could result in severe damage of the engine and motorcycle components. Using fuel with ethanol content over 10% will render the Warranty null and void.

Brakes

Separate-action anti-lock brake system operated by hall-type sensors mounted to each wheel with phonic wheel detection: ABS can be disabled.

FRONT

Semi-floating drilled twin-disk.
Braking material: stainless steel.
Carrier material: aluminum.
Disk diameter: 12.60 in (320 mm).
Disk braking surface: 33.94 sq.in (219 sq.cm).
Brake disk thickness: 0.18 in (4.5 mm).
Maximum wear on disk thickness: 0.16 in (4.0 mm).
Hydraulically operated by a control lever on handlebar right hand side.
Brake caliper make: BREMBO.
Type: Radially-mounted monobloc M4.32 calipers with 4 pistons (ABS Cornering Evo).
Number of caliper pistons: 4.
Friction material: TT 2182 FF.
Brake lever master cylinder diameter: 0.71 in (18 mm).

REAR

With fixed drilled stainless steel disk.
Disk diameter: 9.6 in (245 mm).
Disk braking surface: 29.45 sq. in (190 sq. cm).
Brake disk thickness: 0.2 in (5 mm).
Maximum wear on disk thickness: 0.18 in (4.5 mm).
Hydraulically operated by a pedal on RH side.
Brake caliper make: BREMBO.
Number of caliper pistons: 2.
Caliper piston diameter: 1.73 in (34 mm).
Bosch Cornering EVO ABS as standard.
Friction material: Ferodo Ferit I/D 450 FF.
Cylinder type: PS 13.

Master cylinder diameter: 0.51 in (13 mm).

Attention
The brake fluid used in the brake system is corrosive.
In the event of accidental contact with eyes or skin, wash the affected area with generous quantities of running water.

Transmission

Hydraulically-controlled slipper/self-servo wet multiplate clutch controlled by the adjustable lever on left-hand side of the handlebar.
Drive is transmitted from engine to gearbox main shaft via spur gears.
Primary drive: 1.80:1.
Primary drive: front / rear sprocket ratio: 30/53.
6-gear gearbox with Ducati Quick Shift (DQS) up/down EVO, gear change pedal on left side of motorcycle.

Gearbox output sprocket/rear sprocket ratio: 15/45.
Gearbox output sprocket/rear sprocket ratio for Taiwan version only: 15/41.
Total gear ratios:
1st 37/15
2nd 30/16
3rd 27/18
4th 25/20
5th 24/22
6th 23/24

Drive chain from gearbox to rear wheel.
Make: REGINA 520 ZRDK.
Links: 110.
No. of links for Taiwan version only: 108.

Important
The above gear ratios are the homologated ones and under no circumstances must they be modified.

Attention
If the rear sprocket needs replacing, contact a Ducati Dealer or Authorized Service Center.
If improperly replaced, this component could seriously endanger your safety and cause irreparable damage to your motorcycle.

Frame

Cast monocoque in aluminum alloy.
Aluminum alloy rear subframe.
Steering head angle: 23.6°.
Steering angle: 30° on the left / 30° on the right.

Trail: 3.73 in (94.7 mm).

Wheels

Front

5-spoke, light-alloy cast rim.
Size: 3.50x17"

Rear

Five-spoke, light-alloy cast rim.
Size: 5.50x17"

Tires

Tire type

Front
Pirelli Diablo Rosso IV "tubeless" radial type.
120/70 ZR17 M/C 58W.
Rear
Pirelli Diablo Rosso IV "tubeless" radial type.
180 / 60 ZR17 M/C 75W.

Tire pressure

Use	Front	Rear
On the road (rider only)	2.3 bar (33.36 psi)	2.5 bar (36.26 psi)
On the road (rider + passenger and/or bags)	2.5 bar (36.26 psi)	2.7 bar (39.16 psi)
On track (rider only)	2.1 bar (30.46 psi)	2.0 bar (29.01 psi)

Attention
Check and set tire pressure when tires are cold.
To avoid front wheel rim distortion, when riding on bumpy roads, increase tire pressure by 0.2 ÷ 0.3 bar (2.90÷4.35 psi).

Suspensions

Front

Showa fork with Ø1.69 in (43 mm) stanchions, fully adjustable.
Wheel travel:
4.72 in (120 mm).

Rear

Fully adjustable Sachs monoshock.
Single-sided swinging arm.
Stroke: 2.56 in (65 mm).
Wheel travel:
5.12 in (130 mm).

Adjustable pivot position: ±0.12 in (3 mm)

Steering damper

Non-adjustable Sachs steering damper.

Exhaust system

Lay-out 2 into 1.
Lambda sensors: 2
Catalytic converters: 2

Available colors

Fairing
Ducati Anniversary Red
(Left/right side tank covers, headlight trim, lugs, front mudguard)
Primer: Red VM Dual Primer, manufacturer Lechler, code LDS20067.
Varnish: Acriplast Red Stoner SF, manufacturer Lechler, code LMC06017.
Rims
Color: black.

Storm Green

Fuel tank
Primer: Black 2K primer, manufacturer Palinal, code 873.A002.
Base coat: Hunter green basecoat, manufacturer Palinal, code 928.035B.
Clear Coat: Matt 2K clear coat, manufacturer Palinal code 923I2176.

Electric system

It consists of the following main components.

Instrument panel

Digital with 4.3” TFT color display.

Headlight

Low beam: no.2 LEDs;
high beam: no.2 LEDs;
Parking light/DRL (where fitted): No.6 LEDs.

Electrical controls on handlebar

Front turn indicators: no. 15 LEDs;
BULB front turn indicator type (USA version):
RY10W (12V-10W) Amber Color.
Rear turn indicators (Europe version): no.1 LED;
BULB rear turn indicator type (USA version):
No. 1 RY10W (12V-10W) Amber Color.

Rear lights

Tail light:
parking light: no.18 LEDs;
LED stop lights: no.18 LEDs;
Number plate light: no. 3 LEDs.

Horn.

Stop light switches.
Sealed electrolyte type battery:
12V - 6.5Ah (Pb - Acid)
Generator (Denso):
14V - 510W.
ELECTRONIC RECTIFIER, protected by a 30A fuse located on the solenoid starter, next to the battery.
Starter motor:
Denso BA06 12V - 0.6 kW

Note

For bulb replacement instructions, please read "Replacing the high and low beam bulbs".

Fuses

There are twelve fuses that protect the electric components located inside the front fuse boxes, and one on the electric solenoid starter. There is a spare fuse in every box.
Refer to the table below to identify the circuits protected by the various fuses and their ratings.
The front left fuse box (A) and the front right one (B), are located above the battery.
To reach the fuses, remove the tank cover as described in chapter “Charging the battery”.
To expose the fuses, lift the relevant box protective cover. Mounting position and ampere capacity are marked on box cover.

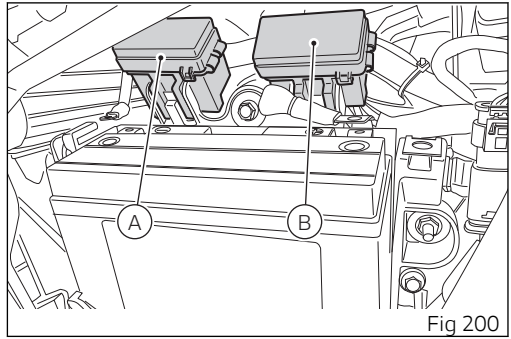

Fig 200

Front left fuse box (A) key		
Pos	El. item	Rat.
1	EMS/ABS/IMU	5 A
2	DASH/BBS	7.5 A
3	Rear light	-
4	Accessories / SW	5 A
5	Injection relay	20 A
6	Diagnostics/ Recharge	7.5 A
7	Spare	5 A
8	Spare	15 A
9	Spare	20 A

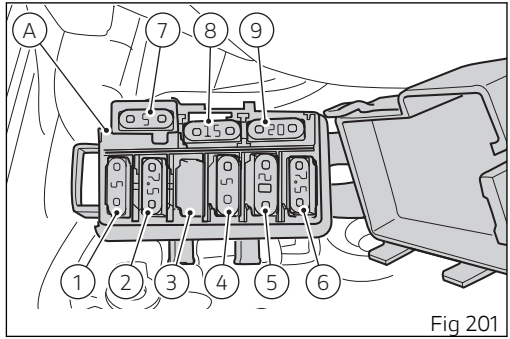

Fig 201

Front right fuse box (B) key		
Pos	El. item	Rat.
1	ABS UBMR	25 A
2	ABS UBVR	10 A
3	Instrument panel	15 A
4	Black Box System (BBS)	10 A
5	Fuel pump relay	10 A
6	El. loads relay	25 A
7	Spare	15 A
8	Spare	10 A
9	Spare	25 A

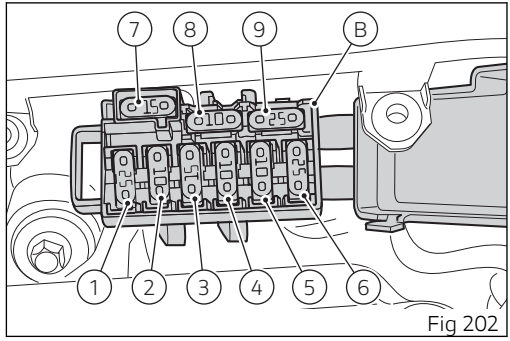

Fig 202

To access the main starter fuse, starter refer remove the left-hand side half-fairing.
The 30A main starter fuse (C) is located next to the battery, on the right side of the fuse box. Remove the protection cover cap to reach it.
The spare 30A fuses (D) are located on the solenoid starter(E); remove the protection cap to reach them.

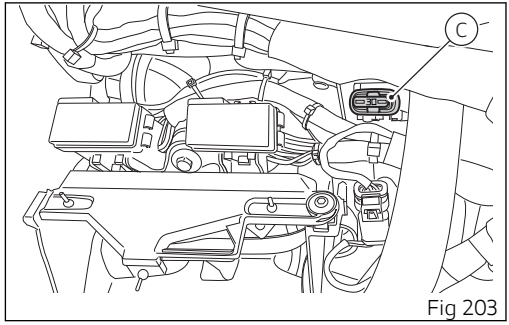

Fig 203

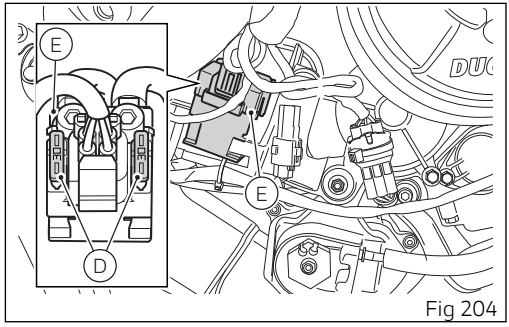

Fig 204

A blown fuse is identified by the interrupted center link (F).

Important

Switch the ignition key to OFF before replacing the fuse to avoid possible short-circuits.

Attention

Never use a fuse with a rating other than specified. Failure to observe this rule may damage the electric system or even cause fire.

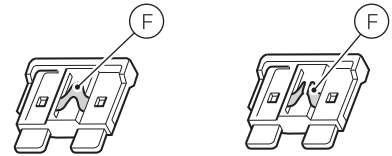

Fig 205

Open source software

Information about open source software

Some vehicle components use open source software. The source code used and information on open source is available online at the following link: https://www.ducati.com/ww/en/home/open-source-software

Declarations of conformity

Declarations of conformity

EU Directive 2014/53/EU

Addresses of radio component manufacturers

All radio components must carry the manufacturer's address according to the provisions of directive 2014/53/EU. For components that, due to their size or nature, cannot be furnished with a sticker, the respective manufacturers' addresses as required by law are listed in the table 2.

Note

Only skilled person can access and install the device.

Table 1

Radio equipment installed in the vehicle	Frequency band	Max. transmission power
Elock	129.6 KHz ÷ 135 KHz	< 66dBµA/m (10m)
Ducati Multimedia System (Bluetooth)	2402 ÷ 2480 MHz	4.4mW
Anti-theft	433.92MHz (±75KHz)	<0.6mA
GPS	1575,4 MHz	

Table 2

Radio equipment installed in the vehicle	Manufacturers' addresses
Elock	ZADI S.p.a. Via Carlo Marx, 138 41012 Carpi (MO), Italy
Ducati Multimedia System (Bluetooth)	COBO S.p.a. Via Tito Speri, 10 25024 Leno (BS), Italy
Anti-theft	PATROLLINE Via Cesare Cantù, 15/C 22031 Albavilla (CO), Italy
GPS	DANFOSS A/S 6430 Nordborg Denmark CVR nr.: 20 16 57 15

Simplified EU declaration of conformity

[Austria]

Ihr Fahrzeug ist mit einer Reihe von Funkgeräten ausgestattet. Die Hersteller dieser Funkgeräte erklären, dass diese, wo gesetzlich vorgeschrieben, mit der Richtlinie 2014/53/EU übereinstimmen. Der vollständige Text der EU-Konformitätserklärung ist unter folgender Adresse verfügbar: certifications.ducati.com

[Belgium]

Votre véhicule est équipé d'une série d'appareillages radio. Les constructeurs de ces appareillages radio déclarent que ces derniers sont conformes à la directive 2014/53/UE lorsque la loi le requiert. Le texte complet de la déclaration de conformité UE est disponible à l'adresse suivante : certifications.ducati.com

[Bulgaria]

Твоят мотоциклет е оборудван с различна по вид радиоапаратура. Производителите на тази радиоапаратура декларират, че тя съответства на Директива 2014/53/ЕС, съгласно изискванията по закон. Пълният текст на декларацията за съответствие ЕС, ще намерите на следния адрес: certifications.ducati.com

[Cyprus]

Το όχημά σας εξοπλίζεται με μια σειρά από ραδιοσυσκευές. Οι κατασκευαστές των συσκευών αυτών δηλώνουν ότι οι συσκευές συμμορφώνονται με την οδηγία 2014/53/ΕΕ, όπου απαιτείται από το νόμο. Το πλήρες κείμενο της δήλωσης συμμόρφωσης ΕΕ είναι διαθέσιμο στη διεύθυνση: certifications.ducati.com

[Czech Republic]

Vaše vozidlo je vybaveno řadou rádiových zařízení. Výrobci těchto radio zařízení, prohlašují, že zařízení jsou v souladu se směrnicí 2014/53/EU, pokud to vyžaduje zákon. Úplné znění prohlášení o shodě EU je k dispozici na internetových stránkách: certifications.ducati.com

[Germany]

Ihr Fahrzeug ist mit einer Reihe von Funkgeräten ausgestattet. Die Hersteller dieser Funkgeräte erklären, dass diese, wo gesetzlich vorgeschrieben, mit der Richtlinie 2014/53/EU übereinstimmen. Der vollständige Text der EU-Konformitätserklärung ist unter folgender Adresse verfügbar: certifications.ducati.com

[Denmark]

Dit køretøj er udstyret med et udvalg af radioudstyr. Producenterne af dette radioudstyr erklærer, at dette udstyr overholder direktiv 2014/53/EU, hvis det kræves i henhold til loven. Den komplette tekst af EU-overensstemmelseserklæringen findes på følgende webadresse: certifications.ducati.com

[Estonia]

Teie sõiduk on varustatud raadioseadmete seeriaga. Selle raadioseadme tootjad kinnitavad, et see seade vastab direktiivile 2014/53/EÜ, kui seadus seda nõuab. EÜ vastavusdeklaratsiooni terviktekst on saadaval järgmisel veebisaidil: certifications.ducati.com

[Spain]

Su vehículo está equipado con una serie de equipos de radio. Los fabricantes de dichos equipos de radio declaran su conformidad con la directiva 2014/53/UE, como requiere la ley. El texto completo de la declaración de conformidad UE está disponible en el siguiente sitio: certifications.ducati.com

[Finland]

Ajoneuvossasi on radiolaitteita. Näiden radiolaitteiden valmistajat vakuuttavat, että laitteet vastaavat direktiiviä 2014/53/EU lain edellyttämällä tavalla. EU-vaatimustenmukaisuusvakuutuksen täydellinen teksti on saatavilla seuraavasta osoitteesta: certifications.ducati.com

[France]

Votre véhicule est équipé d'une série d'appareillages radio. Les constructeurs de ces appareillages radio déclarent que ces derniers sont conformes à la directive 2014/53/UE lorsque la loi le requiert. Le texte complet de la déclaration de conformité UE est disponible à l'adresse suivante : certifications.ducati.com

[United Kingdom]

Your vehicle is equipped with a range of radio equipment. The manufacturers of this radio equipment declare that these equipment complies with Directive 2014/53/EU where required by law. The complete text of the EU declaration of conformity is available at the following web address: certifications.ducati.com

[Greece]

Το όχημά σας εξοπλίζεται με μια σειρά από ραδιοσυσκευές. Οι κατασκευαστές των συσκευών αυτών δηλώνουν ότι οι συσκευές συμμορφώνονται με την οδηγία 2014/53/ΕΕ, όπου απαιτείται από το νόμο. Το πλήρες κείμενο της δήλωσης συμμόρφωσης ΕΕ είναι διαθέσιμο στη διεύθυνση: certifications.ducati.com

[Croatia]

Vaše vozilo je opremljeno nizom radio uređaja. Proizvođači ovih radio uređaja tvrde da su uređaji u skladu s Direktivom 2014/53/UE ako je propisano zakonom. Cjelokupan tekst deklaracije o sukladnosti dostupan je na: certifications.ducati.com

[Hungary]

Járműved egy sor rádió készülékkel van felszerelve. Ezeknek a rádióberendezéseknek a gyártói kijelentik, hogy a készülékek megfelelnek a 2014/53/EU irányelvnek, ahol ezt a törvény megköveteli. Az EU megfelelőségi nyilatkozat teljes szövege az alábbi címen érhető el: certifications.ducati.com

[Ireland]

Your vehicle is equipped with a range of radio equipment. The manufacturers of this radio equipment declare that these equipment complies with Directive 2014/53/EU where required by law. The complete text of the EU declaration of conformity is available at the following web address: certifications.ducati.com

[Italy]

Il tuo veicolo è dotato di una serie di apparecchiature radio. I costruttori di queste apparecchiature radio dichiarano che esse sono conformi alla direttiva 2014/53/UE laddove richiesto per legge. Il testo completo della dichiarazione di conformità UE è disponibile al seguente indirizzo: certifications.ducati.com

[Lithuania]

Jūsų transporto priemonėje įdiegta daug įvairios radijo įrangos. Šios radijo įrangos gamintojai patvirtina, kad ji atitinka 2014/53/ES direktyvos reikalavimus, kaip tai numato galiojantys įstatymai. Visas ES atitikties deklaracijos tekstas pateikiamas svetainėje adresu certifications.ducati.com

[Luxembourg]

Votre véhicule est équipé d'une série d'appareillages radio. Les constructeurs de ces appareillages radio déclarent que ces derniers sont conformes à la directive 2014/53/UE lorsque la loi le requiert. Le texte complet de la déclaration de conformité UE est disponible à l'adresse suivante : certifications.ducati.com

[Latvia]

Jūsu transportlīdzeklis ir aprīkots ar dažādām radioierīcēm. Šo radioierīču ražotājs apliecina, ka ierīces atbilst Direktīvas 2014/53/ES prasībām, ja to paredz attiecīgie tiesību akti. Pilnīgo ES atbilstības deklarāciju skatiet šajā tīmekļa vietnē: certifications.ducati.com

[Malta]

Il-vettura tiegħek hija mgħammra b'firxa ta' tagħmir tar-radju. Il-manufatturi ta' dan it-tagħmir tar-radju jiddikjaraw li dan it-tagħmir jikkonforma mad-Direttiva 2014/53/UE fejn meħtieġ mil-liġi. It-test kollu tad-dikjarazzjoni ta' konformità tal-UE huwa disponibbli fuq l-indirizz tal-web: certifications.ducati.com

[Netherlands]

Uw voertuig is voorzien van diverse draadloze apparatuur. De fabrikanten van deze draadloze apparatuur verklaren dat deze, daar waar dit door de wet voorschreven wordt, overeenstemmen met de richtlijn 2014/53/EU. De volledige tekst van de EU-verklaring van overeenstemming is beschikbaar op het volgende webadres: certifications.ducati.com

[Poland]

Państwa pojazd został wyposażony w szereg urządzeń radiowych. Producenci tych urządzeń radiowych oświadczają, że są one zgodne z dyrektywą 2014/53/UE, tam, gdzie wymaga tego prawo. Pełny tekst deklaracji zgodności UE jest dostępny pod następującym adresem internetowym: certifications.ducati.com

[Portugal]

O seu veículo é dotado de uma série de equipamentos de rádio. Os construtores desses equipamentos de rádio declaram que os mesmos estão em conformidade com a diretiva 2014/53/UE sempre que a lei o

determinar. O texto completo da declaração de conformidade UE está disponível no seguinte endereço: certifications.ducati.com

[Romania]

Vehiculul dvs. este dotat cu o serie de aparate radio. Producătorii acestor aparate radio declară că acestea sunt conforme cu directiva 2014/53/UE, dacă legea impune acest lucru. Textul complet al declarației de conformitate UE este disponibil la următoarea adresă: certifications.ducati.com

[Sweden]

Ditt fordon är utrustat med radioutrustning. Radioutrustningens tillverkare förklarar att denna utrustning uppfyller direktiv 2014/53/EU där så lagen kräver det. Fullständig text om EU-försäkran om överensstämmelse finns på följande adress: certifications.ducati.com

[Slovenia]

Vaše vozilo ima tudi vrsto radijske opreme. Proizvajalci eteh radijskih naprav izjavljajo, da so ti v skladu z uredbo 2014/53/UE, kjer zakon to predvideva. Celotno besedilo izjave o skladnosti EU je na voljo na spodnjem naslovu: certifications.ducati.com

[Slovakia]

Vaše vozidlo je vybavené rádiofónnymi zariadeniami. Výrobcovia týchto rádiofónnych zariadení prehlasujú, že tieto zariadenia sú v zhode so smernicou 2014/53/EÚ v rozsahu predpísanom zákonom. Úplný text ES prehlásenia o zhode je k dispozícii na nasledujúcej adrese: certifications.ducati.com

[Turkey]

Aracınız bir dizi radyo ekipmanı ile donatılmıştır. Bu telsiz ekipmanının üreticileri, yasaların gerektirdiği durumlarda bu ekipmanın 2014/53/EU Direktifine uygun olduğunu beyan eder. AB uygunluk beyanının tam metnine aşağıdaki web adresinden ulaşılabilir: Certificates.ducati.com

United States (USA)

“This device complies with Part 15 of the FCC Rules.
Operation is subject to the following two conditions: (1) this device may not cause harmful interference, and (2) this device must accept any interference received, including interference that may cause undesired operation."
“Changes or modifications not expressly approved by the party responsible for compliance could void the user’s authority to operate the equipment.” "NOTE: This equipment has been tested and found to comply with the limits for a Class B digital device, pursuant to Part 15 of the FCC Rules. These limits are designed to provide reasonable protection against harmful interference in a residential installation. This equipment gene rates, uses and can radiate radio frequency energy and, if not installed and used in accordance with the instructions, may cause harmful interference to radio communications. However, there is no guarantee that interference will not occur in a particular installation. If this equipment does cause harmful interfere nee to radio or television reception, which can be determined by turning the equipment off and on, the user is encouraged to try to correct the interference by one or more of the following measures:

- Reorient or relocate the receiving antenna.
- Increase the separation between the equipment and receiver.
- Connect the equipment into an outlet on a circuit different from that to which the receiver is connected.
- Consult the dealer or an experienced radio/TV technician for help."

- RF exposure Information according 2.1091/2.1093 / OET bulletin 65:
Radiofrequency radiation exposure Information: This equipment complies with FCC radiation exposure limits set forth for an uncontrolled environment. This equipment should be installed and operated with minimum distance of 20 cm between the radiator and your body. This transmitter must not be co-located or operating in conjunction with any other antenna or transmitter.
The manufacturers of these radio equipment declare that devices comply with the FCC

Ducati Multimedia System (Bluetooth)	FCC ID: Z64-2564N
E-Lock System	FCC ID: VFZKLGMZADI03

Canada

This device contains licence-exempt transmitter(s)/ receiver(s) that comply with Innovation, Science and Economic Development Canada's licence-exempt RSS(s). Operation is subject to the following two conditions:
(1) This device may not cause interference.
(2) This device must accept any interference, including interference that may cause undesired operation of the device.

L'émetteur/récepteur exempt de licence contenu dans le présent appareil est conforme aux CNR d'Innovation, Sciences et Développement économique Canada applicables aux appareils radio exempts de licence. L'exploitation est autorisée aux deux conditions suivantes:
(1) L'appareil ne doit pas produire de brouillage;
(2) L'appareil doit accepter tout brouillage radioélectrique subi, même si le brouillage est susceptible d'en compromettre le fonctionnement.

RF Exposure Information:
This equipment complies with Canada radiation exposure limits set forth for an uncontrolled environment. This equipment should be installed and operated with minimum distance of 20 cm between the radiator and your body.

Déclaration d'exposition aux radiations: Cet équipement est conforme aux limites d'exposition aux rayonnements IC établies pour un environnement non contrôlé. Cet équipement doit être installé et utilisé avec un minimum de 20 cm de distance entre la source de rayonnement et votre corps.

Ducati Multimedia System (Bluetooth)	IC: 4511-2564N
E-Lock System	IC: 22239-ELKMZADI03

DUCATI MULTIMEDIA SYSTEM (Bluetooth)

Brasil

Este equipamento opera em caráter secundário, isto é, não tem direito a proteção contra interferência prejudicial, mesmo de estações do mesmo tipo, e não pode causar interferência a sistemas operando em caráter primário. Para consultas, visite: www.anatel.gov.br .

ANATEL

09738-21-10873

Japan

当該機器には電波法に基づく、技術基準適合証明等を受けた特定無線設備を装着している。
This equipment contains specified radio equipment that has been certified to the technical regulation conformity certification under the Radio Law.

本無線機器の改造を禁ずる（これに反した場合は当該認証登録番号は無効となる）
This radio device should not be modified (otherwise the granted designation number will become invalid)

South Korea

해당 무선설비는 전파혼신 가능성이 있으므로 인명안전과 관련된 서비스는 할 수 없습니다

R-R-Cbo-1080795

E-Lock System

South Korea

해당 무선설비는 전파혼신 가능성이 있으므로 인명안전과 관련된 서비스는 할 수 없습니다

R-R-ZAD-EL034001

91377081US

Updated on 05/2024 ED.03

MIX
From responsible sources
FSC™ C110200
FSC
www.fsc.org

Ducati Motor Holding spa
ducati.com

Via Cavalieri Ducati, 3
40132 Bologna, Italy
Ph. +39 051 6413111
Fax +39 051 406580

A Sole Shareholder Company
A Company subject to the Management and Coordination activities of AUDI AG