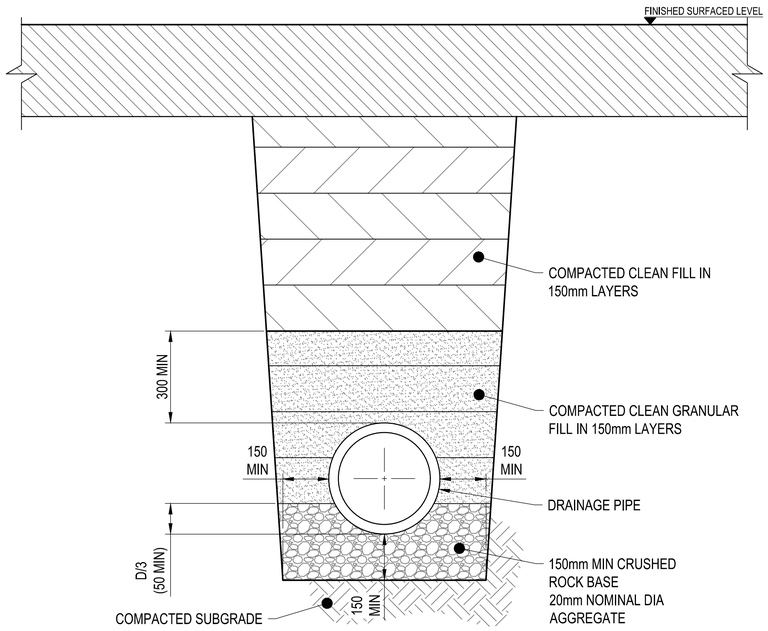

TYPICAL TRENCH DETAIL WET GROUND

1:10

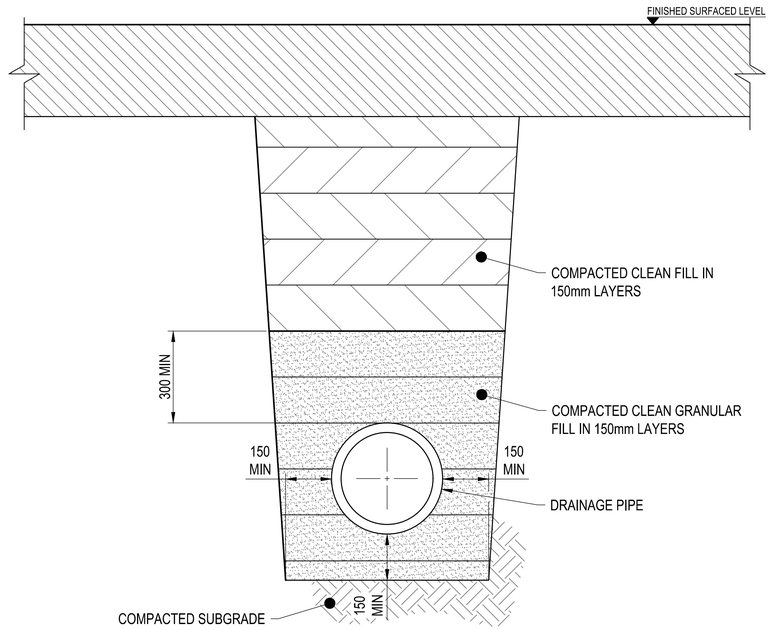

TYPICAL TRENCH DETAIL DRY GROUND

1:10

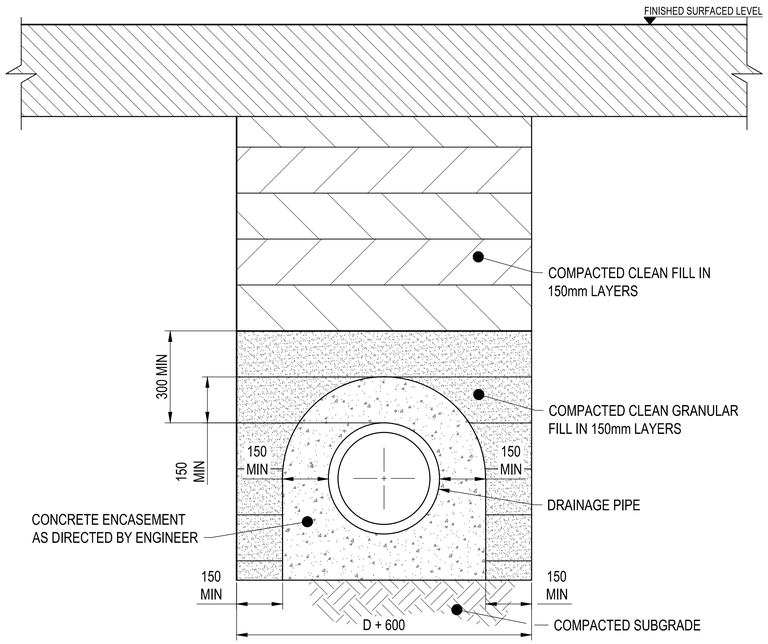

CONCRETE ENCASEMENT

1:10

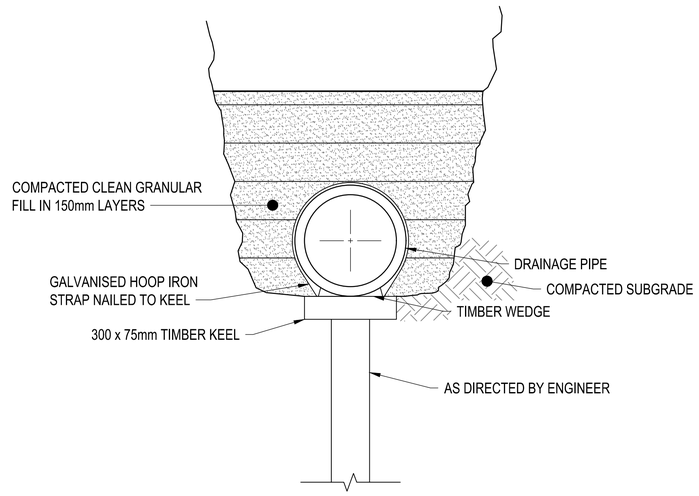

PILED BEDDING

1:10

NOTES

1. ALL BEDDING, EMBEDMENT AND TRENCH BACKFILL SHALL BE COMPACTED IN LAYERS NOT EXCEEDING 150mm TO:
   - 98% MMDD UNDER ROADS.
   - 95% MMDD WITHIN VERGES AND NON-TRAFFICABLE AREAS.
2. WET GROUND BEDDING SHALL BE USED WHERE GROUNDWATER OR SOFT SUBGRADE CONDITIONS AFFECT TRENCH STABILITY.
3. CONCRETE ENCASEMENT SHALL BE USED WHERE COVER IS INSUFFICIENT OR WHERE ADDITIONAL STRUCTURAL PROTECTION IS REQUIRED.
4. PILED BEDDING SHALL BE USED WHERE FOUNDATION CONDITIONS ARE UNSUITABLE TO SUPPORT THE PIPELINE WITHOUT EXCESSIVE SETTLEMENT.
5. BEDDING TYPE SHALL BE SELECTED BASED ON SITE CONDITIONS AND AS DIRECTED BY THE ENGINEER.
6. UNSUITABLE OR UNSTABLE FOUNDATION MATERIAL SHALL BE REMOVED AND REPLACED AS DIRECTED BY THE ENGINEER.
7. FINISHED SURFACE TREATMENT SHALL BE AS NOMINATED. WHERE NO SURFACE TREATMENT IS SPECIFIED, THE TRENCH SHALL BE REINSTATED USING MATERIAL MATCHING THE EXISTING SURFACE CONDITION.
8. ALL STORMWATER DRAINAGE PIPES SHALL BE REINFORCED CONCRETE PIPES TO AS/NZS 4058, WITH PIPE CLASS SELECTED TO SUIT DESIGN LOADINGS, DEPTH OF COVER AND INSTALLATION CONDITIONS, OR APPROVED HDPE STRUCTURED WALL PIPE TO AS/NZS 5065 WITH A MINIMUM STIFFNESS CLASS OF SN8. ALL PIPES SHALL BE INSTALLED IN ACCORDANCE WITH THE MANUFACTURER'S RECOMMENDATIONS.

1:10

Amendments

No	Date	Revision	By	Approved
A	21.07.26	ENDORSED BY CITY OF ARMADALE	DP	MK

Scale: AS SHOWN	Paper: A1
Datum: N/A	Grid: N/A
Surveyed: N/A	Date: N/A

CITY OF Armadale
7 ORCHARD AVENUE, ARMADALE, WA 6112

THIS DRAWING REMAINS THE PROPERTY OF THE CITY OF ARMADALE AND SHALL NOT BE RETAINED, COPIED, OR USED, WITHOUT WRITTEN APPROVAL FROM THE DIRECTOR ENGINEERING SERVICES

Drawn: DR	Date: 10.06.26	Signed:
Designed: DR	Date: 10.06.26	Signed:
Checked: BT	Date: 10.06.26	Signed:
Head of Engineering & Design:		Signed:

Project: CITY OF ARMADALE
TECHNICAL SERVICES STANDARD DRAWINGS

Description: STORMWATER DRAINAGE
PIPE BEDDING DETAILS

PC No:	N/A
CM9 No:	N/A
Sheet No:	1 OF 1
Revision No:	A
DWG No:	STD-D-01