drylin®

Drive technology

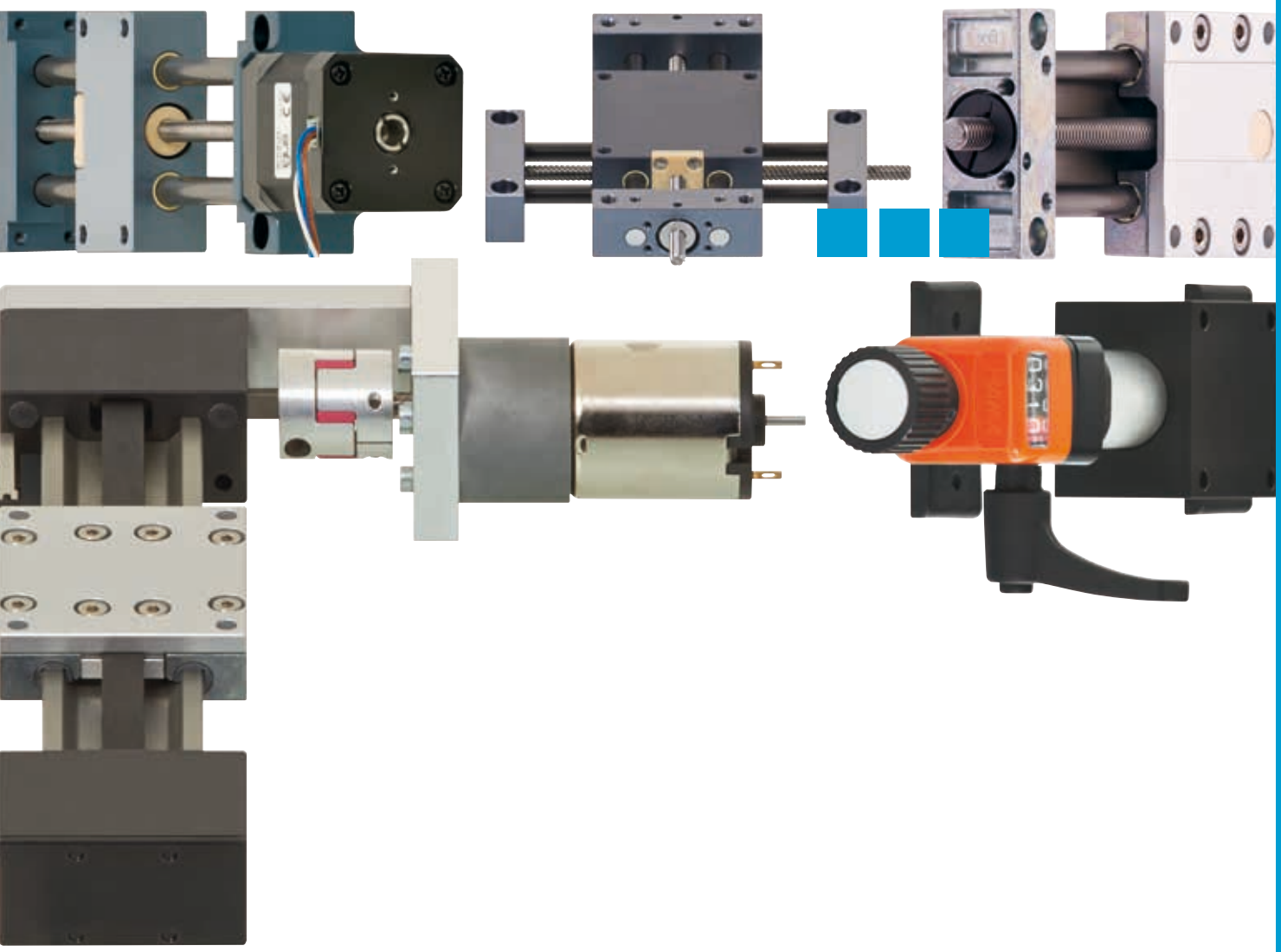

...plastics

CAMERA/LASER ADJUSTMENT IN LABELLING SYSTEM
In a labelling system the camera and laser positioning are guided with two drylin® SHT/SLWE-XY cross slide units.
(Co. Pago Etikettiersysteme GmbH)

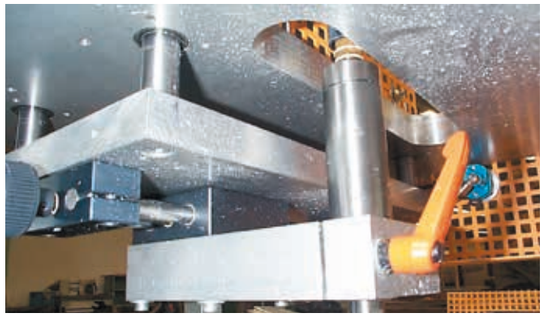

POSITIONING OF MILLING HEADS
Aluminium dust and chips cannot stick due to the absence of lubricants at any of the bearing points of the drylin® lead screw table SHT.
(Berchtold GmbH)

HEIGHT ADJUSTMENT OF CODING DEVICE
The drylin® lead screw unit gives variable and precise adjustment, free from any maintenance or lubrication.
(Filtec Europe GmbH)

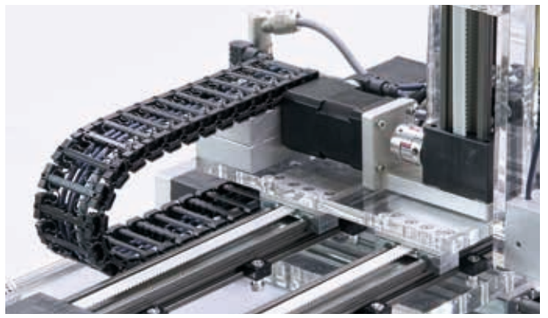

PICK AND PLACE
Quick and maintenance-free handling with drylin® toothed belt axes (X, Y, Z axis).

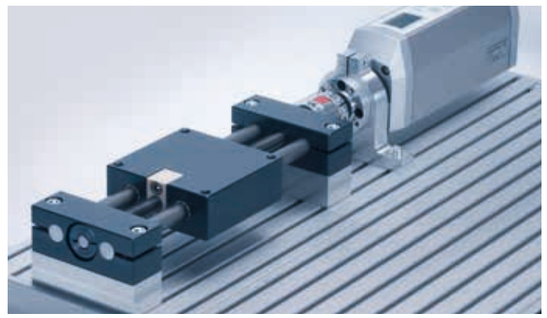

ELECTRIC ACTUATOR
drylin® lead screw table combined with an electric actuator for use in a variety of format adjustments.
(Festo AG & Co. KG)

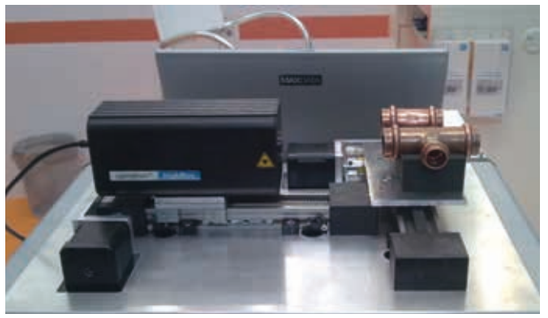

ADJUSTMENT OF INSPECTION CAMERA
drylin® ZLW toothed belt axis in an inspection camera adjustment for checking the position of sealing rings.
(OLPE Jena GmbH)

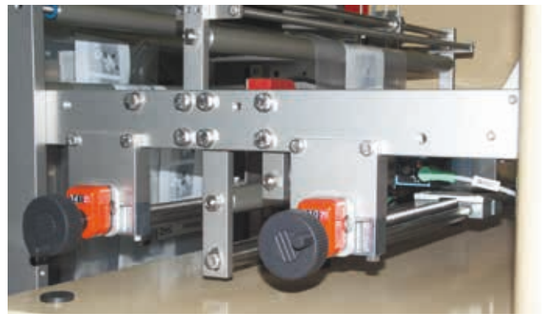

WEB EDGE DETECTION
The drylin® SLW lead screw unit with position indicator and hand wheel adjusts the sensors which detect the edge of the webbing and any print marks.

drylin® drive technology – Linear modules SHT

Standard:

SHT

▶ Page 1232

Preload:

SHT-PL

▶ Page 1233

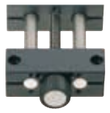

Flexible:

SHTC

▶ Page 1234

The fast one with high helix thread:

SHTS

▶ Page 1235

drylin® drive technology – Linear modules SHT

With ball bearing supported lead screw:

SHT-BB

▶ Page 1236

With quick release mechanism:

SHTC-FF

▶ Page 1238

With quick release mechanism:

SHT-FF

▶ Page 1239

High temperature up to +150 °C:

SHT-HTX

▶ Page 1240

linear modules SHT

Hygienic design:

SHTC-HYD

▶ Page 1241

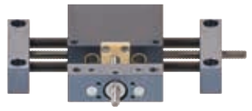

XY-tables:

SHT-XY

▶ Page 1242

Linear modules SLW

Compact:

SLW

▶ Page 1248

Preload:

SLWE-PL

▶ Page 1249

Linear modules SLW

With ball bearing lead screw supports:

SLEW-BB

▶ Page 1250

The fast one with high helix thread:

SLWS

▶ Page 1251

With protected lead screw:

SLW-PT

▶ Page 1252

Two linear units are rolled into one:

SLWT

▶ Page 1253

Linear modules SLW

Stainless steel version:

SLW-ES

▶ Page 1254

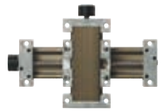

XY-tables:

SLW-XY

▶ Page 1256

XY-tables - Stainless steel version:

SLW-XY-ES

▶ Page 1257

Linear modules SAW

Dynamic in high design:

SAW

▶ Page 1262

Linear modules SAW

Direct drive in short design:

SAWC

▶ Page 1263

With motor available from stock:

DLE-SA

▶ Page 1264

Linear module "light" SHTP – ...

Small and low-cost:

SHTP Mini

▶ Page 1267

Light and strong:

SHTP

▶ Page 1268

... Solid plastic

With quick release mechanism:

SHTP-FF

▶ Page 1270

Linear unit easytube

Single tube linear unit easytube:

SET

▶ Page 1274

easytube with flange on both sides:

SET-F

▶ Page 1275

easytube with carrier flange on one side:

SETB

▶ Page 1276

Linear unit easytube

easytube with measurement scale:

SETM-SC

▶ Page 1277

easytube "light":

SETC

▶ Page 1278

Flat linear module

With ball bearing supported lead screw based on drylin® T:

SLT-BB

▶ Page 1281

Miniature linear module

Miniature linear module Basic:

SLN

▶ Page 1285

Miniature linear module Preload:

SLN-27

▶ Page 1286

Cantilever axis

Cantilever axis:

GRW

▶ Page 1290

Gripper axis:

GRQ

▶ Page 1291

Cantilever axis

Lift/swivel unit:

HSQ

▶ Page 1292

Tooth belt axis ZLW

Standard toothed belt axes:

ZLW

▶ Page 1302

Cost-effective toothed belt axes:

ZLW-ECO

▶ Page 1302

drylin® drive technology | Product overview

Tooth belt axis ZLW

Opposed toothed belt axes:
ZLW-OD
▶ Page 1304

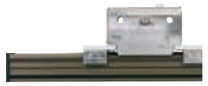

Cantilever axis:
ZAW
▶ Page 1306

drylin® E - Electric drive technology

Linear axes with motor
▶ Page 1316

With motor available from stock:
DLE-SA
▶ Page 1316

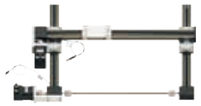

Pre-configured assembly from stock:
drylin® linear robots
▶ Page 1341

Precise, efficient and compact:
lead screw motors
▶ Page 1351

Accessories for drylin® drive technology

V-drive, flexible positioning
▶ Page 1360

V-drive for heavy duty
▶ Page 1361

Hygienic-Design V-drive
▶ Page 1361

Position indicator
▶ Page 1362

Accessories for drylin® drive technology

Lead screw clamp
▶ Page 1363

Hand wheel
▶ Page 1364

Flexshafts
▶ Page 1365

Stepper motors
▶ Page 1368

Accessories for drylin® drive technology

DC motor with spur gear
▶ Page 1372

Protective cover for DC motors
▶ Page 1373

Couplings
▶ Page 1376

Motor flanges
▶ Page 1377

Accessories for drylin® drive technology

Connecting cables for stepper motors
▶ Page 1378

Proximity switches: Limit and reference switches
▶ Page 1379

Spacer for height adjustment:
SLW/SHT linear module
▶ Page 1380

Mounting bracket
▶ Page 1381

Accessories for drylin® drive technology

Adapter kit for linear robot setup
▶ Page 1382

T-slot plate
▶ Page 1383

Slot nuts for mounting
▶ Page 1384

Clamps
▶ Page 1385

Accessories for drylin® drive technology

Adapter plate
▶ Page 1386

Stainless steel angle kit
▶ Page 1387

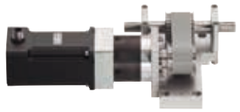

Accessories for linear robot drives
▶ Page 1388

The drylin® product portfolio provides lubrication-free linear drives that are driven either by a trapezoidal thread, high helix thread or toothed belt. The user can choose a suitable individual solution from lightweight solid plastic units up to heavy duty stainless steel solutions. In all systems, the stroke length is freely selectable and the drive given either via hand wheel or motor.

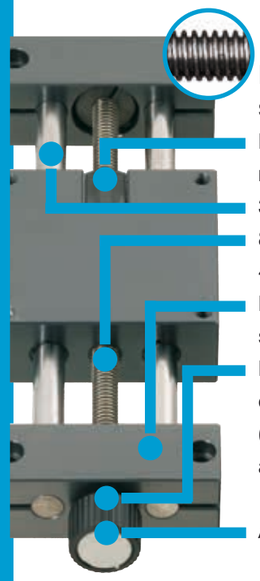

Linear modules with lead screw drive

Polymer bearings and lead screw nuts give lubrication-free operation
3 shaft materials
8 trapezoidal thread pitches, 4 high helix thread pitches
Body material made from stainless steel, aluminium, zinc or plastic
Leadscrew machining to drawing or plain drive shaft (Steel, stainless steel- or aluminium lead screws)

Available accessories

Standard min. 0 °C
max. +60 °C
HTX-Version min. 0 °C
max. +150 °C

When to use it?
- For format adjustments
- In extreme environments
- When a cost-effective, ready-to-fit solution is required
- When corrosion resistance is required
- For low noise

When not to use it?
- When high loads need to travel at highly dynamic forces
- When positioning accuracy <0.1 mm is necessary
- When high running performance is required in continuous operation

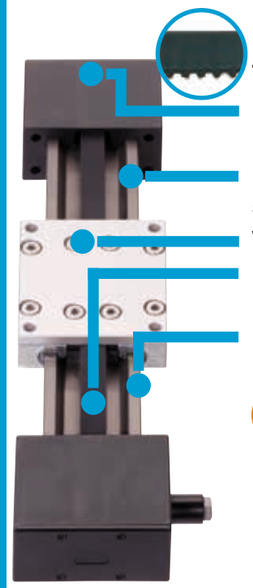

Toothed belt axes

End supports with grooved ball bearing
Lubrication-free linear guide system with polymer plain bearings
Various carriage lengths
Polyurethane or neoprene toothed belts
Hard-anodised aluminium profile

Standard [91] min. 0 °C
max. +60 °C
LT-Version min. -30 °C
max. +60 °C

[91] **Does not apply to accessories**

When to use it?
- Fast positioning of small loads
- Quiet operation
- Slim design
- Underwater use with UW-belt
- Cost-effective solution as basic version
- Long-term use

When not to use it?
- When high loads need to travel at highly dynamic forces
- When positioning accuracy < 0.1 mm is necessary

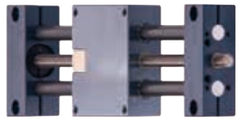

linear modules SHT
- Trapezoidal or high-helix lead screw drives
- Ball-bearing mounted lead screw units for higher dynamic forces
- Carriage in either quad or compact design

▶ Page 1229

linear modules SLW
- Based on drylin® W
- Trapezoidal or high-helix lead screw drives
- Torsion-resistant dual shaft system

▶ Page 1245

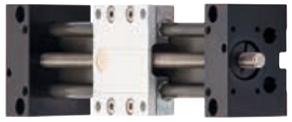

Linear modules SAW
- Drive: lead screw ball bearing
- Rail profile in high design
- Extremely torsion-resistant

▶ Page 1259

Linear module "light" SHTP
- Lightweight
- Cost-effective
- Corrosion resistant

▶ Page 1265

Linear modules SET easytube
- Corrosion resistant
- Low weight due to aluminium and plastic
- Simple, smooth design, protected lead screw

▶ Page 1271

Linear modules SLT
- Variable pitch
- Adjustable drylin® T miniature carriage
- Lead screw arrangement can be selected either left or right

▶ Page 1279

Miniature linear modules SLN
- Based on drylin® N, low profile height
- Versions Basic, adjustable and preload

▶ Page 1283

Cantilever axis GRW
- Dynamic force transmission through rack
- Assembly option for limit and reference switch

▶ Page 1287

Tooth belt axis ZLW
- Versions Basic, Standard and Eco
- For fast positioning
- Ball bearings in deflection pulleys

▶ Page 1293

drylin® E – electric drive technology
- Lubrication-free linear modules with motor
- Ready to install with motor, cable and initiator
- Drive: lead screw, toothed belt or rack

▶ Page 1311

Accessories for linear modules
- Position indicator, hand wheels, screw clamps, angle drives and so on

▶ Page 1357

Linear modules

Linear module	Shaft Ø [mm]	Thread	Lead	Screws Self locking head	Carriages length [mm]	Compatible with drylin® E
SHT-08	8	Tr	06x2	+	35/65	+
	8	Sg	6.35x12.7	-		
SHT-12	12	Tr	10x2	+	30/85	+
	12	Sg	10x12	-		
	12	Sg	10x50	-		
SHT-20	20	Tr	18x4	+	36/130	+
	20	Tr	18x8	+		
	20	Sg	18x100	-		
SHT-30	30	Tr	24x5	+	50/180	+
SHTC-40	40	Tr	26x5	+	70	+
SHTC-50	50	Tr	30x6	+	80	+
SLW-0630	□5	M	M8x1.25	+	60/100	+**
	5	Tr	08x1.5	+		
	5	Sg	08x15	-		
SLW-1040 **SLW-1080** **SLW-10120**	10	Tr	10x2	+	69/100/150/200	+**
	10	Sg	10x12	-		
	10	Sg	10x50	-		
SLW-1660	16	Tr	14x4	+	100/150/200	+
SLW-2080	20	Tr	18x4	+	150/200/250	+
	20	Tr	18x8	+		
	20	Sg	18x100	-		
SLW-25120	30	Tr	24x5	+	150/200/250	+
SAW-0630	□5	Tr	08x1.5	+	60/100	+
	5	Sg	08x15	-		
SAW-1040	10	Tr	10x2	+	69/100/150	+ 10 10
	10	Sg	10x12	-		
	10	Sg	10x50	-		
SAW-1080	10	Tr	12x3	+	100	+ 10 10
	10	Sg	12x6	-		
	10	Sg	12x25	-		
SAW-1660	16	Tr	14x4	+	100/150/200	+
SLT-0412	5	Tr	08x1.5	+	38	+
	5	Sg	08x15	-		
SLT-0415	10	Tr	12x3	+	45	+ 10 10
	10	Sg	12x6	-		
	10	Sg	12x25	-		
SLN-27	27	M	M5x0.8	+	35	+ 10
	10	Sg	5x5	-		
SHTP-01-06	6	M	M8x1.25	+	45	-
SHTP-01-10	10	Tr	06x2	+	36	-
SHTP-01-12 **SHTP-02-12**	12	Tr	10x2	+	55	-
SET-12	12	M	M4x0.7	+	45	-
SET-25	25	Tr	10x2	+	36	-
SET-30	30	Tr	12x3	+	55	-

[120] When configuring your linear module, we ask that you note the igus® specifications for maximum stroke lengths. The performance and load specifications shown above for all drive units are based exclusively on stroke lengths within the recommended values. Exceeding these can result in undesirable effects to the function such as increased wear and noise. Belt or lead screw contact cannot be excluded, and the rated performance and load specifications may not be attainable.

Lead screw slide mounted [121]					Lead screw mounted with ball bearings						
Max. stroke length [120] [mm]	Max. static, axial load capacity [N]	Max. static, radial load capacity [N]	Max. speed [rpm]	Max. feed [m/min.]	Max. stroke length [120] [mm]	Max. stat. axial [N]	Max. stat. radial [N]	Max. speed [rpm]	Max. feed [m/min.]	Technical options (Pages 1172+1173)	Page
-	-	-	-	-	300	100	400	1,000	2.0	ZB	1236
-	-	-	-	-	300	25	100	600	7.6	ZB	1236
750	700	2,800	100	0.2	500	350	1,400	1500	3.0	PL	1232
750	100	400	100	1.2	500	100	400	400	4.8	ZB	1232
750	100	400	100	5.0	500	100	400	200	10.0	ZB	1232
1,000	1,600	6,400	100	0.4	900	1,000	4,000	1,500	6.0	PL	1232
1,000	500	2,000	100	0.8	900	500	2,000	1,000	8.0	PL	1232
1,000	400	1600	100	10.0	900	400	1,600	200	20.0	-	1232
1,250	2,500	10,000	100	0.5	1,000	1,500	6,000	1,200	6.0	PL	1232
1,500	4,000	16,000	100	0.5	-	-	-	-	-	-	1234
1,500	6,250	25,000	100	0.6	-	-	-	-	-	-	1234
300	50	200	100	0.1						-	1248
300	100	400	100	0.2	300	100	400	1,000	1.5	-	1248
300	50	200	100	1.5	300	50	200	600	9.0	-	1248
750	700	2,800	100	0.2	500	350	1,400	1,500	3.0	TTF/PL	1248
750	100	400	100	1.2	500	100	400	400	4.8	TTF/PL	1248
750	100	400	100	5.0	500	100	400	200	10.0	TTF/PL	1248
750	1,200	4800	100	0.4	750	700	2,800	1,500	6.0	TTF/PL	1248
1,000	1,600	6400	100	0.4	900	1,000	4,000	1,500	6.0	TTF/PL	1248
1,000	500	2,000	100	0.8	900	500	2,000	1,000	8.0	TTF/PL	1248
1,000	400	1,600	100	10.0	900	400	1600	200	20.0	TTF/PL	1248
1,250	2,500	10,000	100	0.5	1,000	1,500	6,000	1,200	6.0	-	1248
-	-	-	-	-	300	100	400	1,000	1.5	-	1262
-	-	-	-	-	300	50	100	600	9.0	-	1262
-	-	-	-	-	500	500	2,000	1,500	3.0	TTF/PL	1262
-	-	-	-	-	500	100	400	400	4.8	TTF/PL	1262
-	-	-	-	-	500	100	400	200	10.0	TTF/PL	1262
-	-	-	-	-	750	750	3,000	1,500	4.5	TTF/PL	1262
-	-	-	-	-	750	400	400	1,000	6.0	TTF/PL	1262
-	-	-	-	-	750	200	400	300	7.5	TTF/PL	1262
-	-	-	-	-	750	750	3,000	1,500	6.0	TTF/PL	1262
-	-	-	-	-	300	100	400	1,000	1.5	-	1281
-	-	-	-	-	300	25	100	600	9.0	-	1281
-	-	-	-	-	600	200	800	1,500	4.5	-	1281
-	-	-	-	-	600	100	400	1,000	6.0	-	1281
-	-	-	-	-	600	50	200	300	7.5	-	1281
250	10	40	100	0.1	250	10	40	250	0.2	-	1285
250	10	40	100	0.5	250	10	40	500	2.5	-	1285
300	50	200	100	0.1	-	-	-	-	-	-	1267
350	100	400	100	0.2	-	-	-	-	-	-	1268
500	200	800	100	0.2	-	-	-	-	-	-	1269
200	10	40	100	0.1	-	-	-	-	-	-	1274
750	150	600	100	0.2	-	-	-	-	-	-	1274
850	200	800	100	0.3	-	-	-	-	-	-	1274

[121] Linear modules on slide bearings require an aluminium shaft end support when connected to a motor The technical values in the specifications are maximum values for each criterion, e.g. speed, stroke length etc.; they are not cumulative values. Suitability under consideration of the individual parameters for usage can be checked online at www.igus.eu/linearmodule-finder.

In addition to the standard configurations, drylin® drives offer numerous solutions for the many requirements of different applications.

Adjustable radial clearance

The "turn to fit" feature allows individual clearance adjustment by hand. The adjustment is done in 0.01 mm increments and cannot be triggered unintentionally during the operation (SLW type series 10-20).

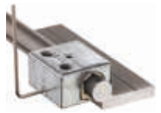

For lineal modules types SLW and SAW

For lineal modules type SHT

Preload (PL)

The optional axial pretension reduces the backlash of the system. Positioning and repeatability can be optimised. The required drive torque increases only slightly.

For lineal modules types SHT, SLW and SAW

Right-left and reverse

In addition to the standard right-handed lead screws, left-hand thread lead screws and counter lead screws can also be used. This option often used in format adjustments can be specified for all diameters and types. Also available as a multi-carriage system or with right/left reverse travel.

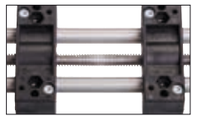

Online customer drawing
▶ www.igus.eu/customerdrawing

Linear modules with ball-bearing mounted lead screw

The SHT and SLW linear modules with ball bearing mounted leads crews give quiet operation, reduced vibration, and increased dynamic capability. These are also suitable for applications with motor drives.

Zero-backlash (ZB)

Self-adjusting zero-backlash lead screw nuts are available for SHT modules in size 08 and 12. For movements that require repeatability and which are implemented through high helix thread, the ZB function provides a minimal lifelong backlash.

Fast Forward (FF)

SHT linear modules and SHTP plastic linear modules offer a combination of accurate positioning and fast manual adjustment.

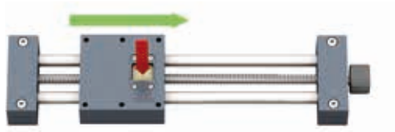

drylin® SLW "Stop and Go"

This additional function for linear carriages enables the use of an unlimited number of carriages on one guide – controlled by only one lead screw. The connection to the lead screw is engaged or released via the button.

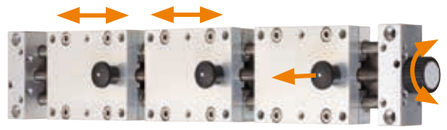

XY-tables

The SHT and SLW linear modules can also be configured as XY cross-slide tables. XY adjustments can therefore be given with a single unit.

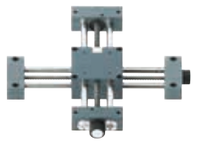

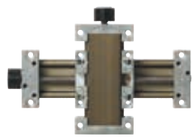

drylin® drive technology | Technical options

Shaft materials

When using linear axes of the SHT series, you can choose a shaft material from steel, stainless steel, or hard-anodised aluminium (standard). The short delivery time and excellent coefficients of friction and wear make the aluminium version the most common choice.

Lead screw materials

All drylin® linear modules can be delivered with self-locking trapezoidal steel and stainless steel lead screws; upon request, these can also be made from hard-anodised aluminium. The SHT and SLW series can also be configured with high-helix stainless steel lead screws. This allows for much higher pitches and drive speeds, but without the self-locking feature.

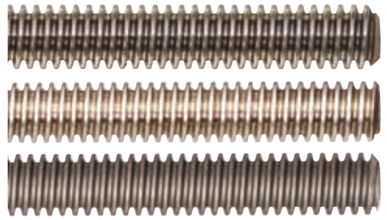

Bearing materials

The bearing surfaces of the drylin® drive units are equipped with lubrication and maintenance-free igus® high performance polymers.
Options include materials for high temperature application up to +150° C (iglidur® X, type HTX), and also for FDA compliant environments (iglidur® A180).

Complete solutions stainless steel

The use of 1.4571 and 1.4301 makes of the guides resistant to seawater and chemical contact corrosion, and the guide shafts are also made from 1.4571.

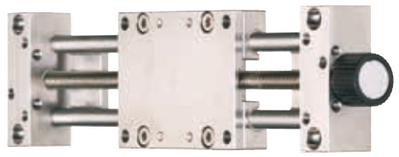

Linear modules with several carriages

All drylin® linear modules can be configured with multiple carriages. The short carriages from the SHTC series are ideally suited for this. The second (or additional) carriage can be installed as a freely moving unit without lead screw, or as a fixed unit with its own trapezoidal lead screw.

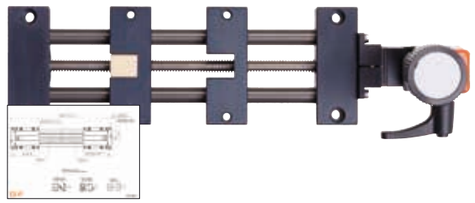

Online customer drawing
▶ www.igus.eu/customerdrawing

Linear modules with motor

Several drylin® drive units are compatible with the drylin® E modular kit. As linear axes, they can be easily and quickly configured directly to the matching igus® stepper motors, power cables and initiators – assembled and tested from one source.

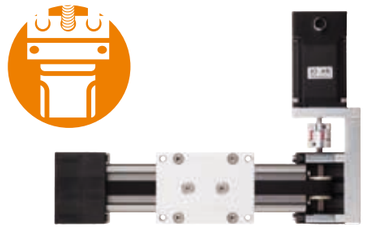

drylin® linear lead screw units have been developed for position settings of all types. The linear setting is achieved by means of trapezoidal lead screw that can be operated manually or by motor. The maximum linear continuous speed is 1.6 m/min according to thread and load. The suitability of the linear slide unit for an application can be checked using the graphs below.

HORIZONTAL

HORIZONTAL

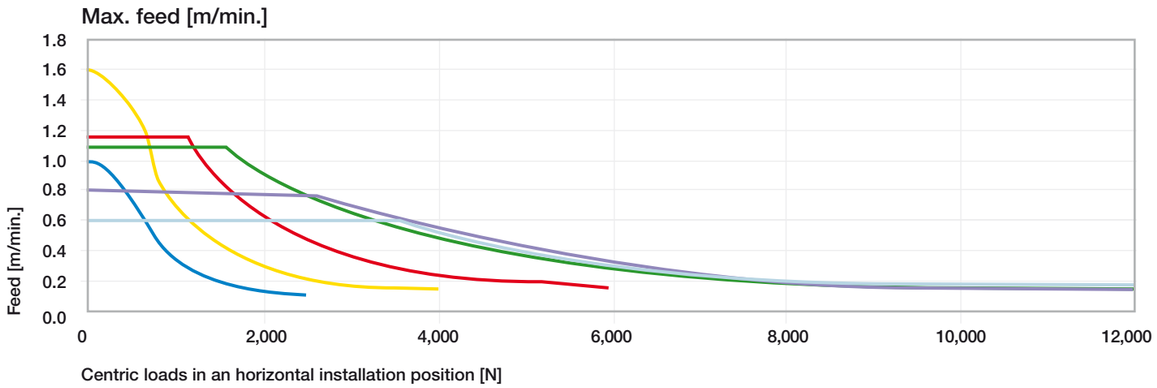

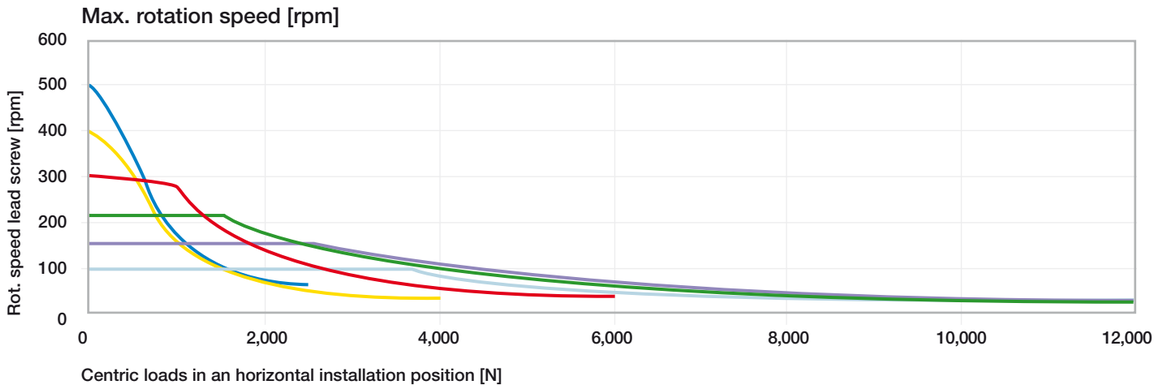

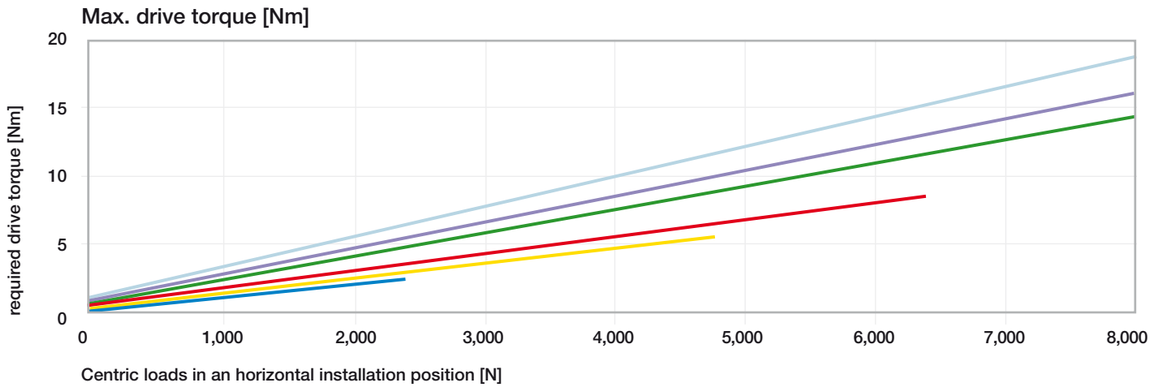

The following trapezoidal lead screw drive sizes are used in SHT, SLW and SET linear modules

- **Tr10x2:** SHT-12, SHTC-12, SHTP-12, SLW-1040, SLW-1080, SLW-1040-ES, SET-25
- **Tr14x4:** SLW-1660
- **Tr18x4:** SHT-20, SHTC-20, SLW-2080
- **Tr24x5:** SHT-30, SHTC-30, SLW-25120
- **Tr26x5:** SHTC-40
- **Tr30x6:** SHTC-50

VERTICAL

VERTICAL

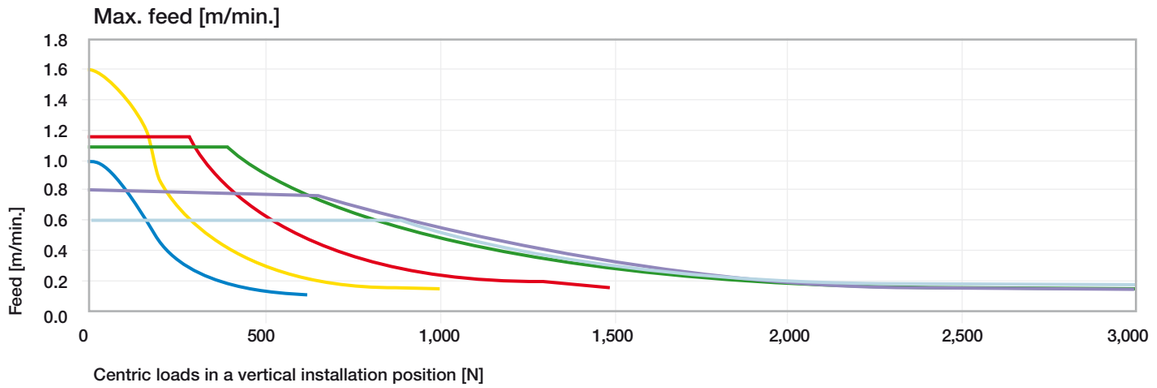

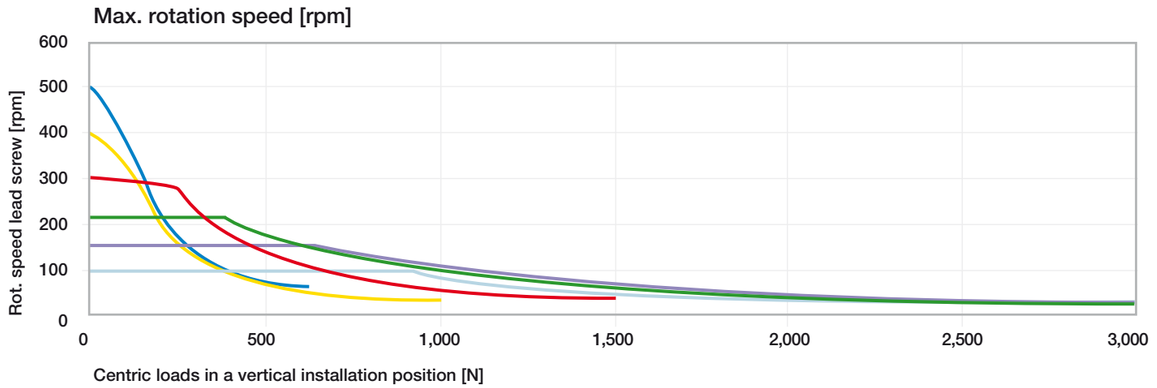

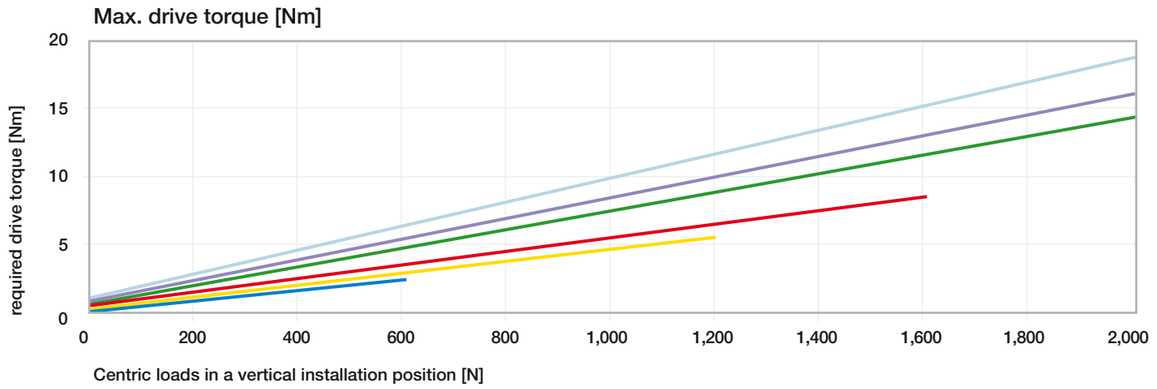

drylin® drive technology | Product finder online

Online configuration of linear systems

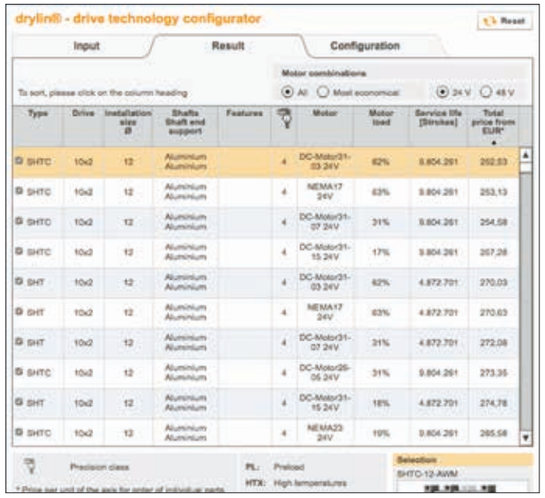

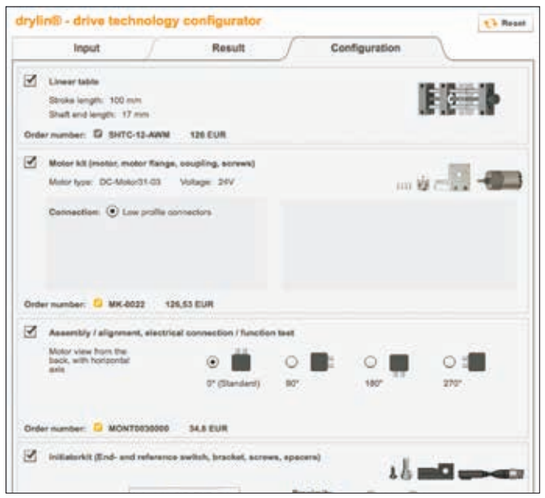

Complete drive technology configurable with or without motor

After you have selected your application parameters, the product finder shows an overview of the linear tables and the motors that are suitable. The product finder calculates the individual price of the linear axis as well as the utilization rate of the motors and the service life in strokes. With just few clicks, you can thus put together a complete linear axis incl. motor, connecting cables and built-on parts.

▶ **www.igus.eu/linearmodule-configurator**

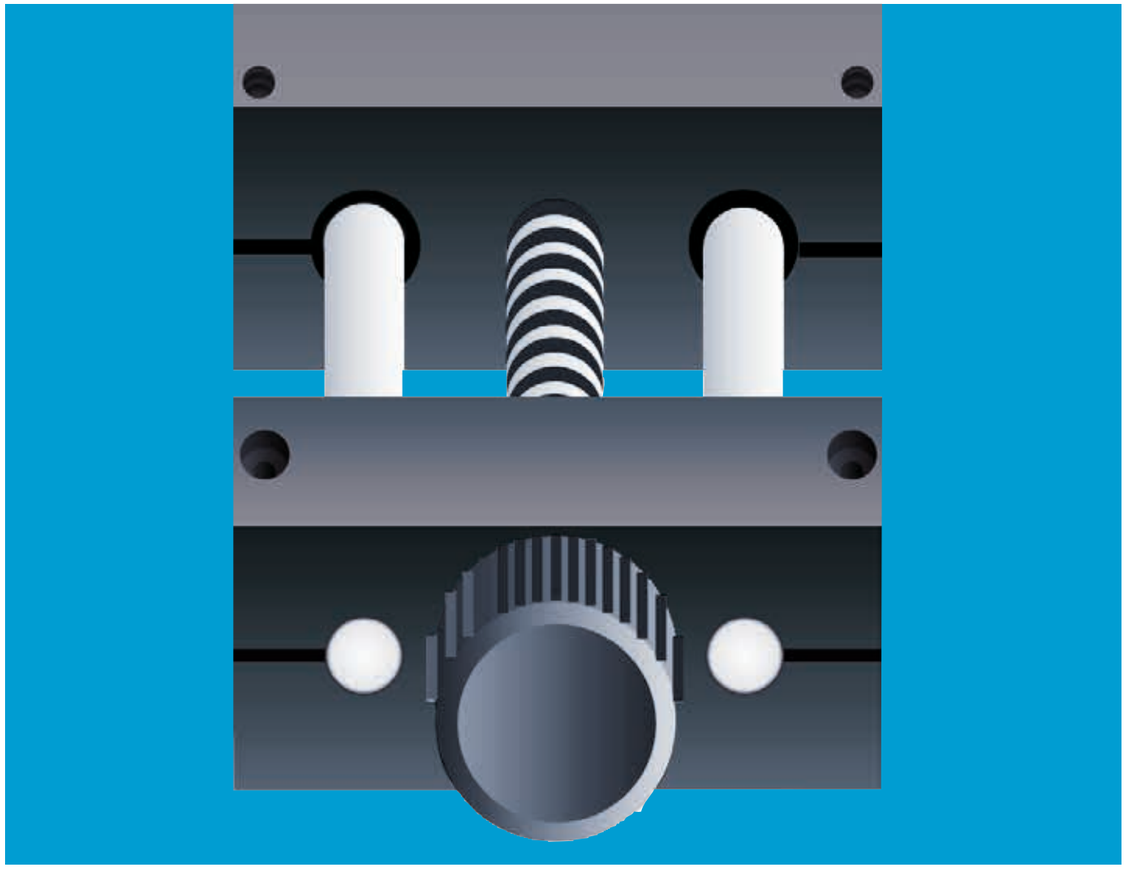

drylin® general drive technology – linear modules SHT

- Trapezoidal or high-helix lead screw drives
- Ball-bearing mounted lead screw units for higher dynamic forces
- Lead screws made from steel, stainless steel or aluminium
- Carriage in either quad block or compact design
- Lubrication and maintenance-free

Robust and precise

Basic parts (shaft end supports/carriages) are made from machined aluminium with anodised surfaces

Drive: self-locking trapezoidal thread or fast adjust high helix thread

Bearing elements/ nut made from lubrication-free iglidur® polymers

Carriages in long or short "compact" design

Shaft material: Aluminium, steel or stainless steel

Lead screw material: steel or stainless steel, plain or ball bearings

For manual adjustments, large range of accessories available ▶ Page 1357

Configurable with motor as a ready to install linear drive (drylin® E ▶ Page 1311)

Lubrication-free linear modules – drylin® SHT

The drylin® SHT linear modules can be moved lubrication-free, while also offering high precision and robust components. The units can be individually configured with various shaft and lead screw materials, carriage lengths and additional functions. The SHT series is suitable for manual and motorised operation and is supplied ready for connection with drylin® E-motors.

- All sliding surfaces are completely lubrication-free due to the use of iglidur® high performance polymers
- Freely selectable stroke lengths
- High temperature version available
- SHT linear modules can be configured as a multi-carriage system or with right/left reverse travel

Typical application areas

- Format adjustment
- Actuators
- Sensor adjustment
- Marking and engraving technology
- Laboratory equipment

Available in 3-8 days
Detailed information about delivery time online.

Block pricing online
No minimum order value. From batch size 1.

Carriage lengths: 30 - 180 mm
Pitch: 2–100 mm/rotation
Stroke lengths: up to 1,500 mm

Product finder
▶ www.igus.eu/sht-productfinder

100% lubrication and maintenance-free

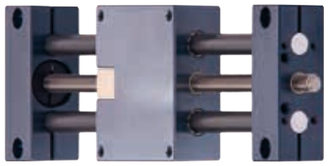

Linear module SHT – Standard

- Solid design
- Three different sizes
- Various materials for shaft and lead screw
- Maintenance-free and optionally corrosion resistant

▶ Page 1232

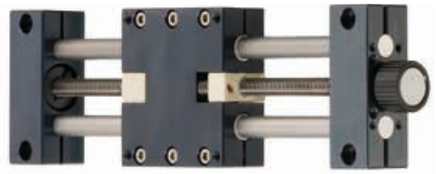

Linear module SHT-PL "preload"

- Preloaded trapezoidal lead screw nuts, preload force: 50 N
- Manually and continuously adjustable radial clearance
- Low weight due to aluminium and plastic

▶ Page 1233

Linear module SHTC – Flexible

- High flexibility due to short carriages
- Ideal for 2 carriages
- 5 sizes from Ø 12 up to 50 mm

▶ Page 1234

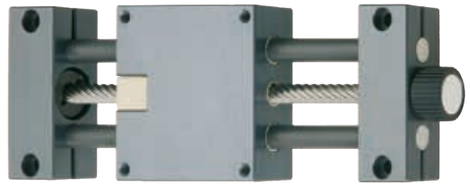

Linear module SHTS – The fast one

- With high helix lead screw
- High-speed-solution for fast positioning
- Up to 100 mm travel/rotation

▶ Page 1235

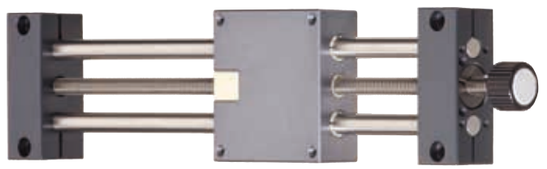

Linear module SHT-BB - ball-bearing supported

- Higher rotation speed and higher precision
- Belt drive permits radial loads
- Constant drive torque
- Less axial clearance

▶ Page 1236

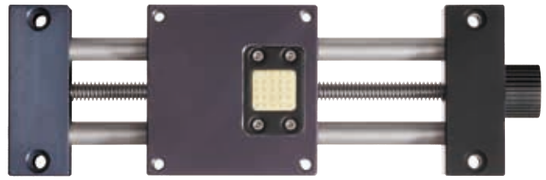

Linear module SHT-FF – "Fast-Forward"

- With quick-release mechanism
- Precise and fast positioning
- Including self-locking brake
- Only recommended for horizontal applications

▶ Page 1239

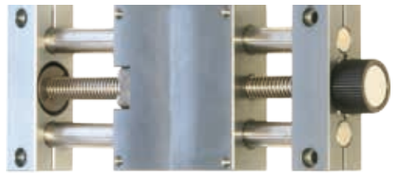

Special designs

- High temperature version up to +150 °C
- Hygienic design, light, washable

▶ From page 1240

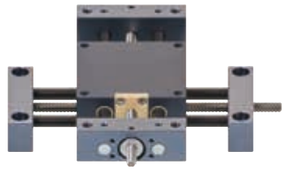

XY-tables

- XY-tables standard and pre-load

▶ From page 1242

drylin® SHT | Linear modules | Product range

Standard

- Solid design
- Various materials for shaft and lead screw
- Maintenance-free and optionally corrosion resistant
- Tr10x2, Tr18x4, Tr24x5
- Temperature resistant up to +60 °C
- Available accessories ▶ **Page 1357**
- Lead screw nuts are available separately ▶ **Page 1200**
- Available with motor ▶ **Page 1311**

reddot design award winner 2006

Order key
complete ▶ Page 1244

SHT-12-AWM

- Shaft material
- Installation size
- Standard

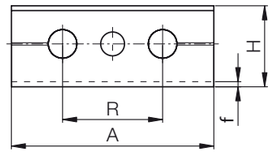

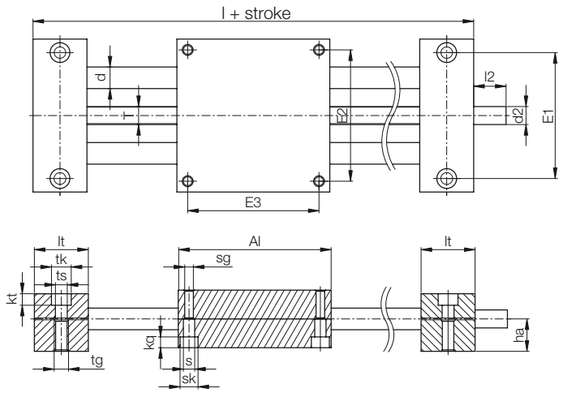

Technical data

Part No.	Max. stroke length	Aluminium shaft		Steel shaft		Max. stat. load capacity	
		Weight	Additional (per 100 mm)	Weight	Additional (per 100 mm)	Axial	Radial
	[mm]	[kg]	[kg]	[kg]	[kg]	[N]	[N]
SHT-12-AWM	750	1.1	0.1	1.3	0.2	700	2,800
SHT-20-AWM	1,000	3.2	0.3	3.9	0.6	1,600	6,400
SHT-30-AWM	1,250	8.6	0.6	10.9	1.4	2,500	10,000

Dimensions [mm]

Part No.	A –0.3	Al –0.3	H	E1 ±0.15	E2 ±0.15	E3 ±0.15	l	R	f	lt	tk	ts
SHT-12-AWM	85	85	34	70	73	73	145	42	2	30	11	6.6
SHT-20-AWM	130	130	48	108	115	115	202	72	2	36	15	9.0
SHT-30-AWM	180	180	68	150	158	158	280	96	4	50	20	13.5

Part No.	tg	kt ±0.1	s	sk	sg	kq	d	T	l2	d2 Standard	ha
SHT-12-AWM	M8	6.4	6.3	10	M6	6.0	12	Tr10x2	17	Tr10x2[92)]	18
SHT-20-AWM	M10	8.6	6.4	11	M8	7.0	20	Tr18x4	26	12h9	23
SHT-30-AWM	M16	12.6	11.0	18	M12	10.6	30	Tr24x5	38	14h9	36

92) Lead screw end unmachined

drylin® SHT | Linear modules | Product range

Preload Version

Preloaded trapezoidal lead screw nut

Order key
complete ▶ Page 1244

SHT-12-AWM-PL

- Preload
- Shaft material
- Installation size
- Standard

- Preloaded trapezoidal lead screw nuts, preload force: 50 N
- Manually and continuously adjustable radial clearance
- Low weight due to aluminium and plastic
- Lead screw end unmachined
- Temperature resistant up to +60 °C
- Available accessories ▶ **Page 1357**
- Lead screw nuts are available separately ▶ **Page 1200**
- Available with motor ▶ **Page 1311**

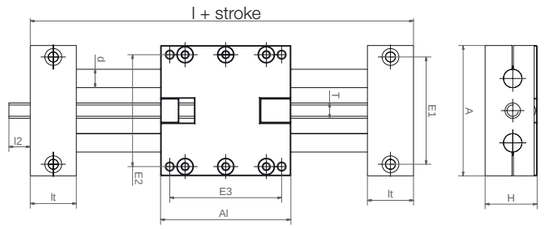

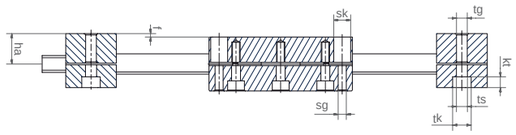

Technical data

Part No.	Max. stroke length	Aluminium shaft		Steel shaft		Max. stat. load capacity	
		Weight	Additional (per 100 mm)	Weight	Additional (per 100 mm)	Axial	Radial
	[mm]	[kg]	[kg]	[kg]	[kg]	[N]	[N]
SHT-12-AWM-PL	750	1.1	0.1	1.3	0.2	700	2,800
SHT-20-AWM-PL	1,000	3.2	0.3	3.9	0.6	1,600	6,400
SHT-30-AWM-PL	1,250	8.6	0.6	10.9	1.4	2,500	10,000

Dimensions [mm]

Part No.	A –0.3	Al –0.3	H	E1 ±0.15	E2 ±0.15	E3 ±0.15	l	R	f	lt	tk	ts
SHT-12-AWM-PL	85	85	34	70	73	73	145	42	2	30	11	6.6
SHT-20-AWM-PL	130	130	48	108	115	115	202	72	2	36	15	9.0
SHT-30-AWM-PL	180	180	68	150	158	158	280	96	4	50	20	13.5

Part No.	tg	kt ±0.1	sk	sg	d	T	l2	d2 Standard	ha
SHT-12-AWM-PL	M8	6.4	10	M6	12	Tr10x2	17	Tr10x2[92)]	18
SHT-20-AWM-PL	M10	8.6	11	M8	20	Tr18x4	26	12h9	23
SHT-30-AWM-PL	M16	12.6	18	M12	30	Tr24x5	38	14h9	36

92) Lead screw end unmachined

drylin® SHT | Linear modules | Product range

Flexible

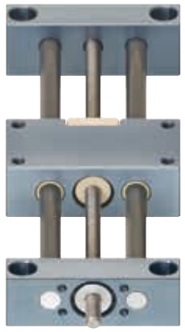

- High flexibility
- Ideal for 2 carriages
- Adjustable
- Available accessories ▶ **Page 1357**
- Lead screw nuts are available separately ▶ **Page 1200**
- Available with motor ▶ **Page 1311**

Order key
complete ▶ Page 1244

SHTC-12-AWM

- Shaft material
- Installation size
- Type flexible

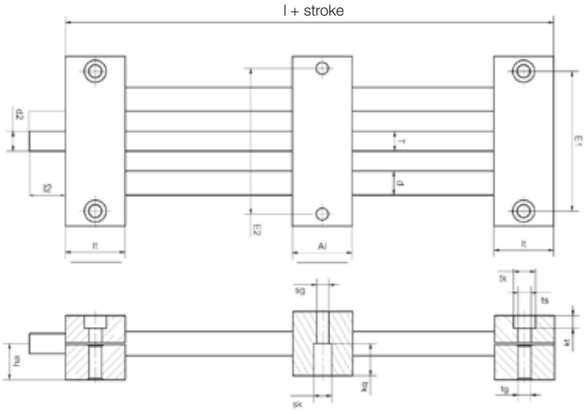

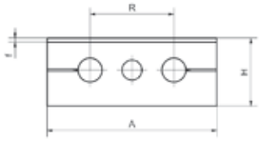

Technical data

Part No.	Max. stroke length	Aluminium shaft		Steel shaft		Max. stat. load capacity	
		Weight	Additional (per 100 mm)	Weight	Additional (per 100 mm)	Axial	Radial
	[mm]	[kg]	[kg]	[kg]	[kg]	[N]	[N]
SHTC-12-AWM	750	0.7	0.1	0.8	0.2	700	2,800
SHTC-20-AWM	1,000	1.9	0.3	2.3	0.6	1,600	6,400
SHTC-30-AWM	1,250	4.6	0.6	5.8	1.4	2,500	10,000
SHTC-40-SWMH	1,500	11.0	0.9	16.0	2.4	4,000	16,000
SHTC-50-SWMH	1,500	17.0	1.2	26.3	3.5	6,250	25,000

Dimensions [mm]

Part No.	A	Al	H	E1	E2	l	R	f	lt	tk	ts	tg
	–0.3	–0.3		±0.15	±0.15							
SHTC-12-AWM	85	30	34	70	73	90	42	2	30	11	6.6	M8
SHTC-20-AWM	130	36	48	108	115	108	72	2	36	15	9.0	M10
SHTC-30-AWM	180	50	68	150	158	150	96	4	50	20	13.5	M16
SHTC-40-SWMH	230	70	84	202	202	210	122	4	70	20	13.5	M16
SHTC-50-SWMH	280	80	100	250	250	240	152	4	80	20	13.5	M16

Part No.	kt	sk	sg	kq	d	T	l2	d2	ha
	±0.1							Standard	
SHTC-12-AWM	6.4	10	M6	6.0	12	Tr10x2	17	Tr10x2 92)	18
SHTC-20-AWM	8.6	11	M8	7.0	20	Tr18x4	26	12h9	23
SHTC-30-AWM	12.6	18	M12	10.6	30	Tr24x5	38	14h9	36
SHTC-40-SWMH	12.6	20	M16	39	40	Tr26x5	45	16h9	44
SHTC-50-SWMH	12.6	20	M16	49	50	Tr30x6	50	20h9	52

92) Lead screw end unmachined

drylin® SHT | Linear modules | Product range

The fast one with high helix thread

- Pitch Sg10x12, Sg10x50, Sg18x100
- High-speed-solution
- Available accessories ▶ **Page 1357**
- Lead screw nuts are available separately ▶ **Page 1200**
- Available with motor ▶ **Page 1311**

reddot design award
winner 2006

Order key
complete ▶ Page 1244

SHTS-12-AWM-10x12

- Lead
- Shaft material
- Dimension
- High helix thread
- Standard

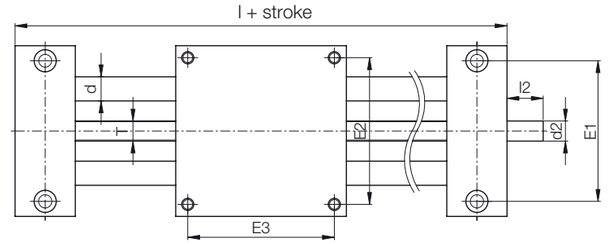

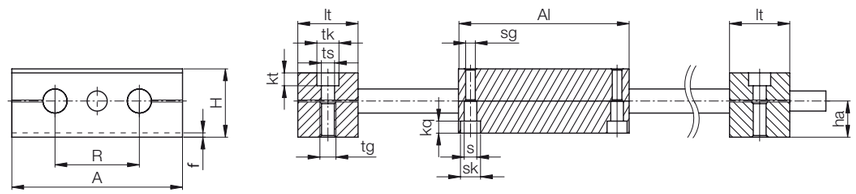

Technical data and dimensions [mm]

Part No.	Max. stroke length	Aluminium shaft		Max. stat. load capacity	
		Weight	Additional (per 100 mm)	Axial	Radial
	[mm]	[kg]	[kg]	[N]	[N]
SHTS-12-AWM-10x12	750	1.1	0.1	100	400
SHTS-12-AWM-10x50	750	1.1	0.1	100	400
SHTS-20-AWM-18x100	1,000	3.2	0.3	400	1,600

Dimensions [mm]

Part No.	A	Al	H	E1	E2	E3	l	R	f	lt	tk	ts	tg
				±0.15	±0.15	±0.15							
SHTS-12-AWM-10x12	85	85	34	70	73	73	145	42	2	30	11	6.6	M8
SHTS-12-AWM-10x50	85	85	34	70	73	73	145	42	2	30	11	6.6	M8
SHTS-20-AWM-18x100	130	130	48	108	115	115	202	72	2	36	15	9.0	M10

Part No.	kt	s	sk	sg	kq	d	T	l2	d2	ha
	±0.1								Standard	
SHTS-12-AWM-10x12	6.4	6.3	10	M6	6.0	12	10x12	17	Sg10x12 92)	18
SHTS-12-AWM-10x50	6.4	6.3	10	M6	6.0	12	10x50	17	Sg10x50 92)	18
SHTS-20-AWM-18x100	8.6	6.4	11	M8	7.0	20	18x100	26	12h9	23

92) Lead screw end unmachined

drylin® SHT | Linear modules | Product range

With ball bearing lead screw supports

- Higher speeds
- Higher precision
- Less axial clearance
- Belt drive permits radial loads
- Constant drive torque
- Zero-backlash function available for sizes 08 and 12
- Available accessories ▶ **Page 1357**
- Lead screw nuts are available separately ▶ **Page 1200**
- Available with motor ▶ **Page 1311**

Order key
complete ▶ **Page 1244**

SHT-BB-12-AWM

- Shaft material
- Installation size
- Ball bearing
- Standard

Order key
complete ▶ **Page 1244**

SHT-08-ZB-AWM

- Shaft material
- Ball bearing, zero-backlash
- Installation size
- Standard

Technical data

Part No.	Max. stroke length	Aluminium shaft		Steel shaft		Max. stat. load capacity	
		Weight	Additional (per 100 mm)	Weight	Additional (per 100 mm)	Axial	Radial
	[mm]	[kg]	[kg]	[kg]	[kg]	[N]	[N]
SHTC-08-ZB	300	0.240	0.05	0.270	0.094	100	360
SHT-08-ZB-AWM-6X2P1	300	0.205	0.05	0.228	0.103	100	400
SHT-08-ZB-AWM-6.35x12.7	300	0.205	0.05	0.228	0.103	100	400
SHT-12-ZB-AWM-10x12	500	1.1	0.1	1.3	0.2	150	600
SHT-BB-12-AWM	500	1.1	0.1	1.3	0.2	350	1,400
SHT-BB-20-AWM	900	3.2	0.3	3.9	0.6	1,000	4,000
SHT-BB-30-AWM	1,000	8.6	0.6	10.9	1.4	1,500	6,000

drylin® SHT | Linear modules | Product range

drylin® SHT linear modules

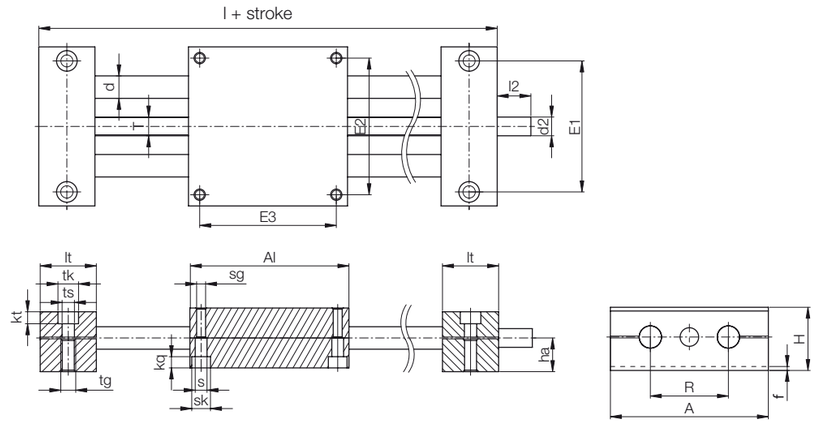

Dimensions [mm]

Part No.	A	Al	H	E1	E2	E3	l	R	f	lt	tk	ts
	–0.3	–0.3		±0.15	±0.15	±0.15						
SHTC-08-ZB	65	36	23	52	55	26	96	32	1.5	15.5	10	5.5
SHT-08-ZB-AWM-6X2P1	65	65	23	52	55	55	96	32	1.5	15.5	10	5.5
SHT-08-ZB-AWM-6.35x12.7	65	65	23	52	55	55	96	32	1.5	15.5	10	5.5
SHT-12-ZB-AWM-10x12	85	85	34	70	73	73	145	42	2	30	11	6.6
SHT-BB-12-AWM	85	85	34	70	73	73	145	42	2	30	11	6.6
SHT-BB-20-AWM	130	130	48	108	115	115	202	72	2	36	15	9.0
SHT-BB-30-AWM	180	180	68	150	158	158	280	96	4	50	20	13.5

Part No.	tg	kt	s	sk	sg	kq	d	T	l2	d2	ha
		±0.1								Standard	
SHTC-08-ZB	M6	7	4.2	8	M5	4.6	8	6 / 6.35	17	6 / 6.35	13
SHT-08-ZB-AWM-6X2P1	M6	7	4.2	8	M5	4.6	8	Tr6x2	17	Tr6x2[92)]	13
SHT-08-ZB-AWM-6.35x12.7	M6	7	4.2	8	M5	4.6	8	6.35x12.7	17	6.35[92)]	13
SHT-12-ZB-AWM-10x12	M8	6.4	6.3	10	M6	6.0	12	10x12	17	10x12[92)]	18
SHT-BB-12-AWM	M8	6.4	6.3	10	M6	6.0	12	Tr10x2	17	Tr10x2[92)]	18
SHT-BB-20-AWM	M10	8.6	6.4	11	M8	7.0	20	Tr18x4	26	12h9	23
SHT-BB-30-AWM	M16	12.6	11.0	18	M12	10.6	30	Tr24x5	38	14h9	36

[92)] Lead screw end unmachined

drylin® SHT | Linear modules | Product range

With "Fast-Forward" quick release mechanism

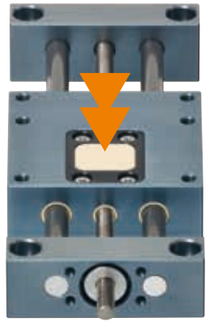

- Fast manual format adjustments
- Precise aluminium version
- Variable stroke length
- Multi-carriage solutions
- Recommended only for horizontal applications
- Available accessories ▶ **Page 1357**
- Available with motor ▶ **Page 1311**

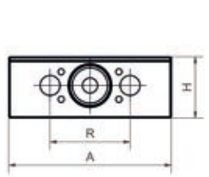

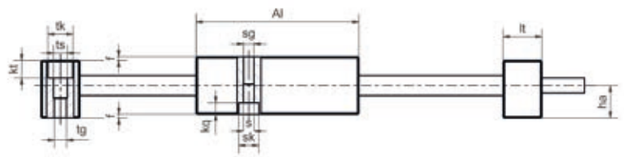

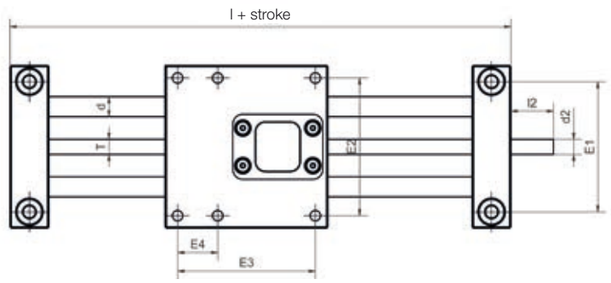

Technical data

Part No.	Max. stroke length	Aluminium shaft		Max. stat. load capacity
		Weight	Additional (per 100 mm)	Radial
	[mm]	[kg]	[kg]	[N]
SHTC-08-AWM-FF	300	0.35	0.04	100
SHT-12-AWM-FF	750	1.1	0.1	2,800

Dimensions [mm]

Part No.	A	Al	H	E1	E2	E3	E4	l	R	lt	l2	d2
SHTC-08-AWM-FF	65	65	23	52	55	55	16	96	32	15.5	17	6
SHT-12-AWM-FF	85	85	34	70	73	73		145	42	30	17	Tr10x2 [92]

Part No.	f	tk ±0.1	ts	tg	kt	s	sk	sg	kg	d Standard	T	ha
SHTC-08-AWM-FF	1.5	10	5.5	M6	7	4.2	8	M5	4.6	8	6	13
SHT-12-AWM-FF	2	11	6.6	M8	6.4	6.3	10	M6	6.0	12	Tr10x2	18

[92] Lead screw end unmachined

drylin® SHT linear modules

drylin® SHT | Linear modules | Product range

With "Fast-Forward" quick release mechanism

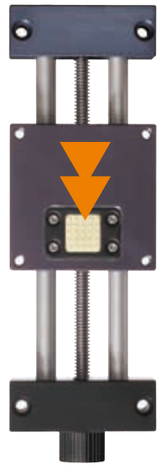

- Fast manual format adjustments
- Aluminium version
- For fast format adjustments
- Including self-locking brake
- Variable stroke length
- Only recommended for horizontal applications
- Max. stat. axial load 200 N (horizontal mounting position)
- Max. dynamic. axial load 50 N
- Available accessories ▶ **Page 1357**
- Available with motor ▶ **Page 1311**

Order key

complete ▶ Page 1244

SHT-12-AWM-FF

- Fast Forward
- Shaft material
- Installation size
- Standard

product design award 2011

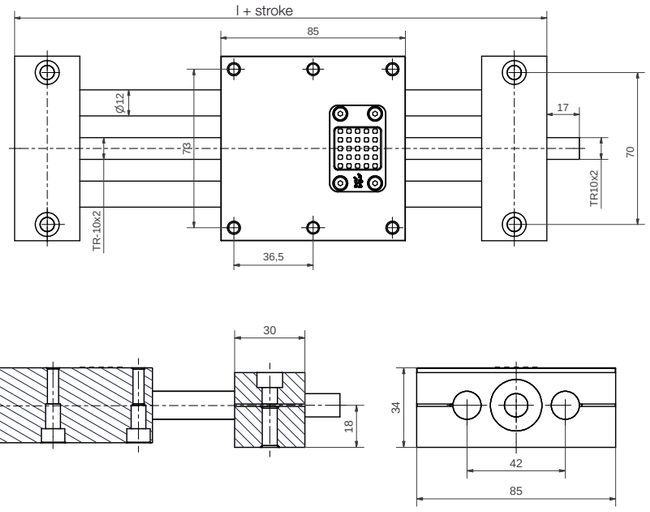

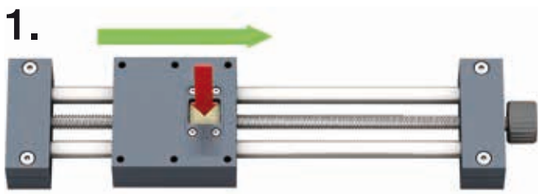

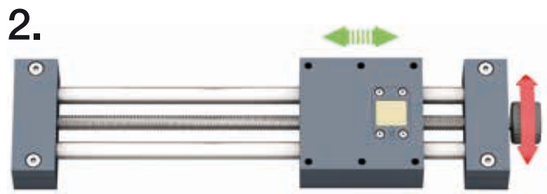

press > disengage > move manually > click into place > fine-tuning

drylin® SHT | Linear modules | Product range

High temperature up to +150 °C

- Shafts and lead screw made from stainless steel, bearings and nut iglidur® X
- Carriages and shaft ends made from anodised aluminium
- Temperature resistant up to +150 °C
- Available accessories ▶ Page 1357

Order key
complete ▶ Page 1244

SHT-20-EWM-HTX

- High temperature
- Shaft material
- Dimension
- Standard

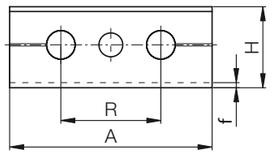

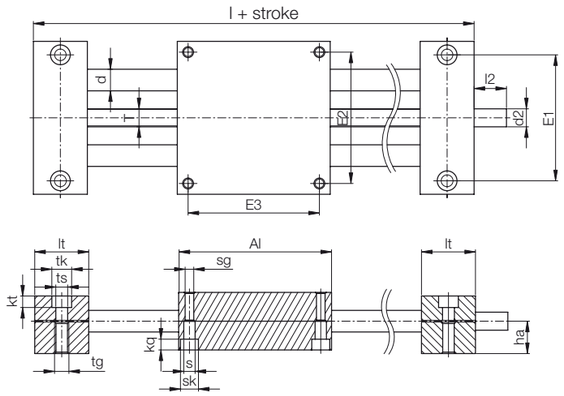

Technical data

Part No.	Max. stroke length	Steel shaft		Max. stat. load capacity	
		Weight	Additional (per 100 mm)	Axial	Radial
	[mm]	[kg]	[kg]	[N]	[N]
SHT-12-EWM-HTX	750	1.3	0.2	700	2,800
SHT-20-EWM-HTX	1,000	3.9	0.6	1,600	6,400

Dimensions [mm]

Part No.	A –0.3	Al –0.3	H	E1 ±0.15	E2 ±0.15	E3 ±0.15	l	R	f	lt	tk	ts
SHT-12-EWM-HTX	85	85	34	70	73	73	145	42	2	30	11	6.6
SHT-20-EWM-HTX	130	130	48	108	115	115	202	72	2	36	15	9.0

Part No.	tg	kt ±0.1	s	sk	sg	kq	d	T	l2	d2 Standard	ha
SHT-12-EWM-HTX	M8	6.4	6.3	10	M6	6.0	12	Tr10x2	17	Tr10x2 [92)]	18
SHT-20-EWM-HTX	M10	8.6	6.4	11	M8	7.0	20	Tr18x4	26	12 h9	23

[92)] Lead screw end unmachined

[117)] In the event of severe temperature fluctuations during transport, storage and use, thermal expansion effects cannot be ruled out.

drylin® SHT | Linear modules | Product range

Hygienic design

STAIN-LESS STEEL

Order key
complete ▶ Page 1244

SHTC-20-EWM-HYD

- Hygienic Design
- Shaft material
- Dimension
- Type flexible

- Lightweight
- Washable
- Wide gaps
- Materials: plastic and VA stainless steel
- Lead screw nuts made of FDA-compliant iglidur® A180
- Available accessories ▶ Page 1357

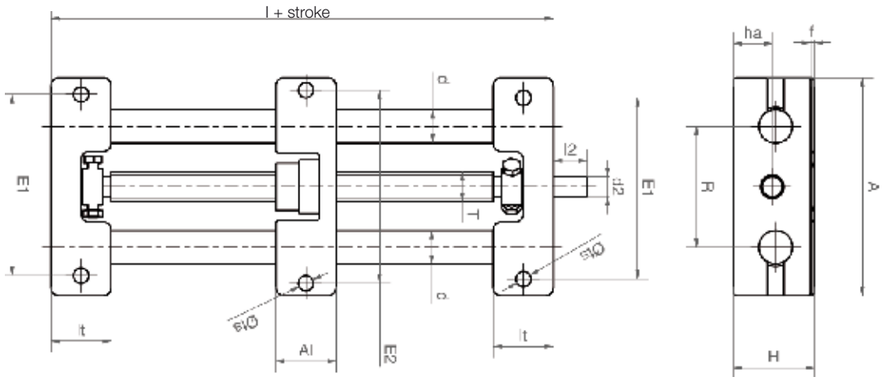

FDA

The lead screw linear unit can be delivered with complete FDA-compliant materials.

Dimensions [mm]

Part No.	A –0.3	Al –0.3	H	E1 ±0.15	E2 ±0.15	l	R	f	lt	ts	d	T	l2	d2	ha
SHTC-20-EWM-HYD	130	35	48	108	115	108	72	2	36	9.0	20	Tr18x4	26	12 h9	23

drylin® SHT | XY-tables | Product range

XY-table standard/preload

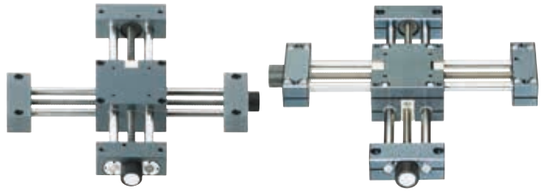

drylin® SHT drylin® SHT-PL

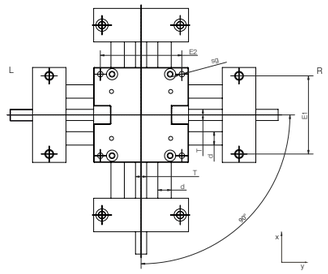

- Available as standard and preload version
- High precision, extreme stiffness and accurate alignment due to the single-piece carriage
- Adjustments by trapezoidal thread
- Assembly of upper unit with left or right adjustment possible
- Available accessories ▶ **Page 1357**

Order key

complete ▶ **Page 1243**

SHT-XY-12-AWM-PL-R

- **R:** y-unit right adjustment
- **L:** y-unit left adjustment
- Preload (optional)
- Shaft material
- Dimension
- XY-table
- Standard

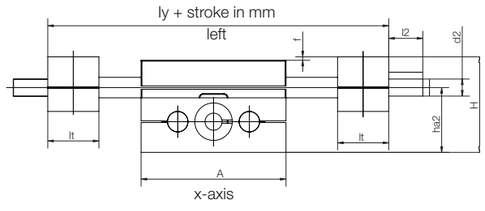

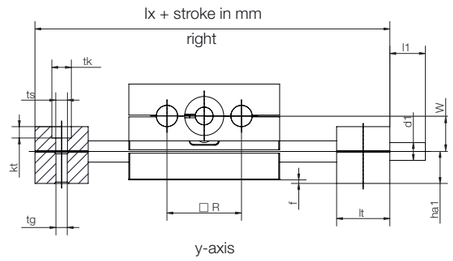

Dimensions [mm]

Part No.	Max. stroke length	A –0.3	H	E1 ±0.15	E2 ±0.15	Base length lx	Basic length ly	R	f	lt	tk	ts	tg	kt
SHT-XY-08-AWM	150	65	42	52	56	96	96	32	1.5	15.5	10	5.5	M6	7
SHT-XY-12-AWM	350	85	56	70	73	145	145	42	2	30	11	6.6	M8	6.4
SHT-XY-12-AWM-PL	350	85	56	70	73	145	145	42	2	30	11	6.6	M8	6.4
SHT-XY-20-EWM-PL[93)]	500	130	86	108	115	202	202	72	2	36	15	9.0	M10	8.6

Part No.	sg	d	T	l1	d1 Standard	d1 Alternative	l2	d2 Standard	d2 Alternative	ha1	ha2	W ha2–ha1
SHT-XY-08-AWM	M5	8	Tr6x2/Tr6.35x2.54	15.5	5	–	15	5	–	13	29	16
SHT-XY-12-AWM	M6	12	Tr10x2	17	Tr10x2	6 h9	17	Tr10x2	6 h9	18	38	20
SHT-XY-12-AWM-PL	M6	12	Tr10x2	17	Tr10x2	6 h9	17	Tr10x2	6 h9	18	38	20
SHT-XY-20-EWM-PL[93)]	M8	20	TR18x4	26	TR18x4	12 h9	26	12 h9	–	23	63	40

Required accessories (e.g. hand wheel) can be ordered left- or right-mounted in the y-direction.

Order example for SHT-XY-12-AWM-L-200-300-HR, left adjustment, stroke 200/300 mm, 2 hand wheels

93) **For size 20 we recommend stainless steel shafts (EWM), AWM also available**

drylin® SHT | XY-tables | Order key

Order key XY-table

SHT-XY-12-AWM-PL-L-200-300-HR-ES

Lead screw material
- **Blank:** Steel C15
- **ES:** Stainless steel 1.4305 (Standard with EWM)

Accessories/Options
- **Blank:** Without extras (standard)
- **HK:** Lead screw clamp (2x)
- **PA:** Position indicator (2x)
- **HR:** Hand wheel (2x)
- **HTX:** High temperature version up to +180 °C
- **Z:** Pins in TR10x2

Stroke y-direction

Stroke x-direction

Adjustment y-unit
- **L:** Lead screw end on the left side
- **R:** Lead screw end on the right side

Camber
- **Blank:** Standard
- **PL:** Preloaded

Shaft material
- **AWM:** Hard anodised aluminium
- **SWM:** Cf53 (1.1213)
- **EWM:** Stainless steel X105 (1.4125)

Dimensions
- **12:** Size ø 12 mm
- **20:** Size ø 20 mm

Type XY-table

drylin® SHT | Linear modules | Order key

Order key for a complete system

SHT-12-AWM-150-HR-ES

Lead screw material
- **Blank:** Steel C15 (standard)
- **ES:** Stainless steel 1.4305 (standard with EWM)
- **AL:** Anodised aluminium

Options
- **Blank:** Without extras (standard)
- **HK:** Lead screw clamp
- **PA:** Position indicator
- **HR:** Hand wheel
- **PL:** Preloaded
- **HTX:** High temperature version up to +180 °C
- **HYD:** Hygienic Design
- **Z:** Pins in TR10x2
- **FF:** Fast Forward
- **ZB:** Zero-Backlash

Stroke length in mm

Shaft material
- **AWM:** Hard anodised aluminium
- **SWM:** Cf53 (1.1213)
- **EWM:** Stainless steel X105 (1.4125)

Dimensions
- **12:** Size ø 12 mm (SHT, SHTC, SHTS)
- **20:** Size ø 20 mm (SHT, SHTC, SHTS)
- **30:** Size ø 30 mm (SHT, SHTC)
- **40:** Size ø 40 mm (SHTC)
- **50:** Size ø 50 mm (SHTC)

Type
- **SHT:** Standard
- **SHZ-PL:** Preload
- **SHTC:** Flexible
- **SHT-BB:** With ball-bearing mounted lead screw
- **SHTS:** With high helix lead screw
- **SHT-XY:** Cross-table

Delivery time
with aluminium shaft AWMP: 2-3 days, with stainless steel shafts EWM or steel shaft SWM: 3-8 days

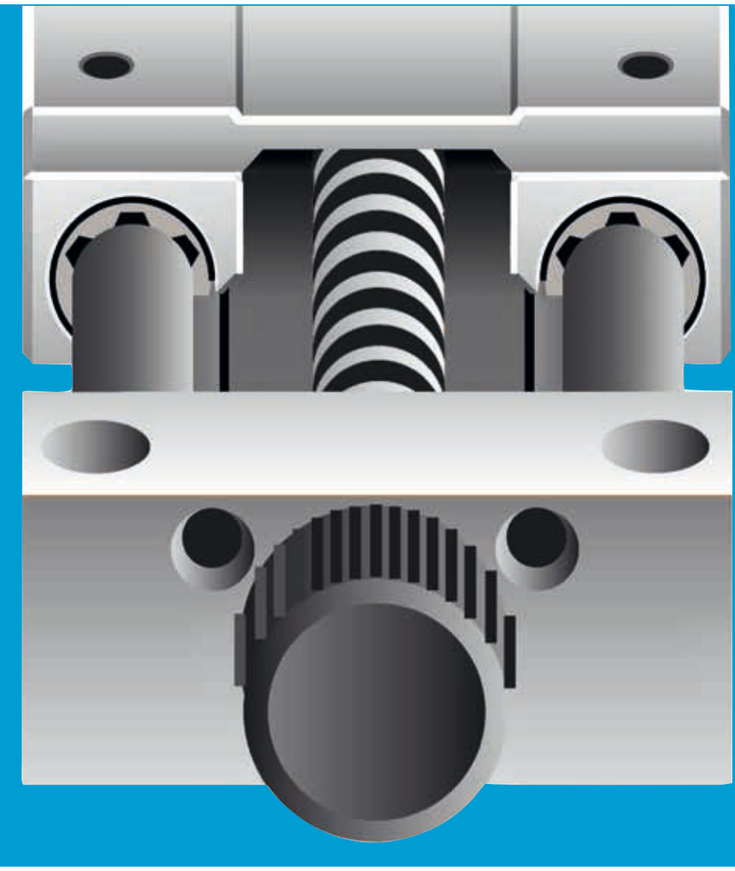

drylin® general drive technology – linear modules SLW

- Lubrication-free linear modules based on drylin® W guides
- Trapezoidal or high-helix lead screw drives
- Torsion-resistant dual shaft system
- Many carriage and rail options
- Suitable for manual and motor-operated adjustments

Modular design

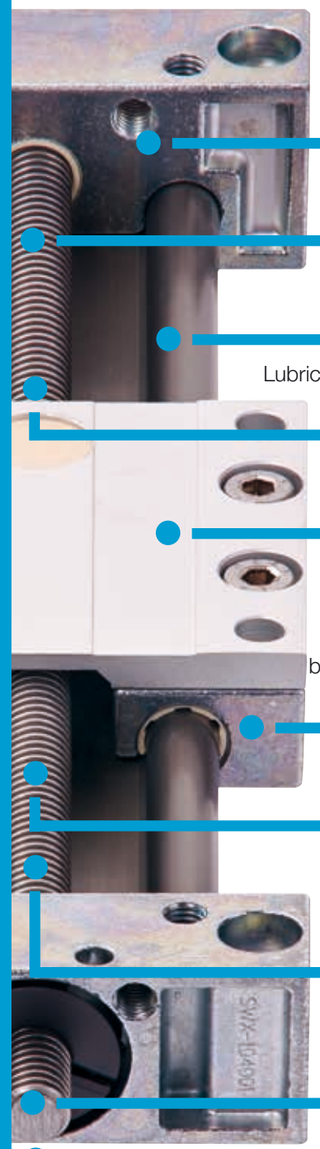

Shaft end supports are made from anodised aluminium or from chromated die-cast zinc

Lead screw mounted with plain or ball bearings

drylin® W linear guide system

Lubrication and maintenance-free drylin® lead screw nuts

Mounting plates made from anodised aluminium

Fully configured carriages with four drylin® W individual bearing housings with lubrication-free drylin® liners

Lead screw material: steel or stainless steel

Drive: self-locking trapezoidal thread or fast adjust high helix thread

For manual adjustments, large range of accessories available ▶ **Page 1357**

Configurable with motor as a ready to install linear drive (drylin® E ▶ **Page 1311**)

Lubrication-free linear modules – drylin® SLW

Extremely torsion resistant aluminium dual shaft rails and many carriage versions characterise the drylin® W product range, and form a well rounded modular kit for the drylin® SLW linear drives. The modules are very low profile, as well as robust. The drylin® SLW linear stages are ideal for manual adjustments, but also can be fitted with a motor to make an electrical linear actuator.

- Variable carriage widths and lengths
- Flat drylin® guide rails or high profile
- Corrosion resistant made from stainless steel available

Typical application areas

- Format and lane adjustments
- Packaging technology
- Height adjustments
- 3D printers
- Camera adjustment

Available in 3-8 days
Detailed information about delivery time online.

Block pricing online
No minimum order value. From batch size 1.

Carriage lengths: 60-250 mm
Carriage widths: 54-195 mm
Stroke lengths: up to 1,250 mm

Product finder
▶ **www.igus.eu/slw-productfinder**

Flat and torsionally stable

Linear module SLW –Compact

- High torsional stability, fully supported
- Cost-effective
- Shaft end supports made according to installation size of chromated zinc, anodised aluminium or plastic

▶ **Page 1248**

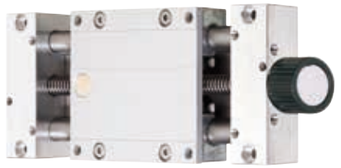

Linear module SHT-PL "preload"

- Lubrication-free and precise
- Preloaded trapezoidal nut (preload force: 50 N)
- Manually adjustable radial clearance, reduction of the axial clearance

▶ **Page 1249**

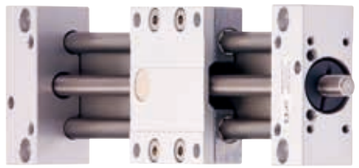

Linear module SHT-BB "ball-bearing supported"

- Efficient and dynamic
- Quiet, reduced clearance
- Up to 1,500 rpm (according to length and load)

▶ **Page 1250**

Linear module SLWS with lead screw

- Fast positioning
- High-helix lead screw drives
- Up to 100 mm stroke per rotation

▶ **Page 1251**

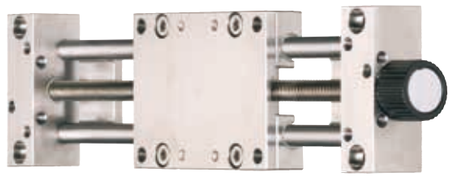

Linear module SLW – stainless steel version

- With corrosion resistant steel components
- Choice of bearing material: iglidur® J (standard), iglidur® A180 (FDA-compliant), iglidur® X (high temperature up to +150 °C)
- For environments involving contact with water and chemicals

▶ **Page 1254**

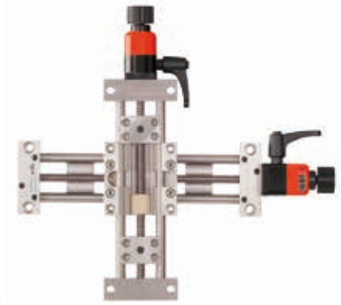

Linear module special designs

- SLW with protect mechanism for applications with high levels of dirt
- High flexibility through SLWT with dual lead screw
- Cross slide solutions

▶ **From page 1253**

drylin® SLW | Linear modules | Product range

Compact

- Flat and compact
- High torsional stability
- Fully supported
- Aluminium drylin® W guide rails, hard anodised
- Available accessories ▶ **Page 1357**
- Lead screw nuts are available separately ▶ **Page 1200**
- Available with motor ▶ **Page 1311**

Order key
complete ▶ Page 1258

SLW-1040

- Dimension
- Compact Type

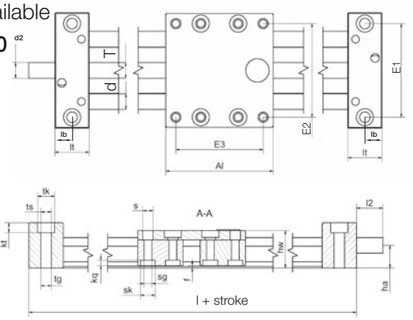

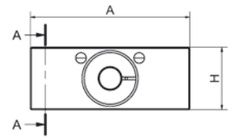

Technical data and dimensions [mm]

Part No.	Design	Max. stroke length [mm]	Shaft weight [kg]	Additional (per 100 mm) [kg]	Max. stat. load capacity axial [N]	Max. stat. load capacity Radial [N]	End block material
SLW-0630	■	300	0.2	0.08	50	200	Plastic
SLW-1040	●	750	0.7	0.10	700	2,800	Zinc die-casting
SLW-1080	●	750	0.9	0.20	700	2,800	Aluminium
SLW-10120	●	750	1.6	0.25	700	2,800	Aluminium
SLW-1660	●	750	1.5	0.30	1,200	4,600	Aluminium
SLW-2080	●	1,000	3.0	0.40	1,600	6,400	Aluminium
SLW-25120	●	1,250	5.9	0.90	2,500	10,000	Aluminium

Part No.	A –0.3	Al[94] –0.3	H	E1 ±0.15	E2 ±0.15	E3 ±0.15	l	hw	f	lt	lb	tk	ts	tg
SLW-0630	54	60	20	40	45	51	100	18	1.2	20	8	11	6.6	–
SLW-1040	74	69	29	60	60	56	113	24	1.5	22	11	11	6.8	M8
SLW-1080	108	100	29	94	94	87	144	24	1.5	22	11	11	6.8	M8
SLW-10120	154	100	29	140	140	87	144	24	1.5	22	11	11	6.8	M8
SLW-1660	104	100	37	84	86	82	150	35	1.5	25	12.5	15	9.0	M10
SLW-2080	134	150	46	116	116	132	206	44	1.5	28	14	15	8.6	M10
SLW-25120	200	150	60	173	173	128	220	55	2.5	35	17.5	20	13.5	M16

Part No.	kt ±0.1	s	sk	sg	kq	d	T	l2	d2 Standard	ha
SLW-0630	8.0	4.5	7.0	M4	2.0	6	M8	15	M8	9.5
SLW-1040	6.4	6.6	9.5	M6	4.4	10	Tr10x2	17	Tr10x2[92]	14.5
SLW-1080	6.4	6.6	9.5	M6	4.4	10	Tr10x2	17	Tr10x2[92]	14.5
SLW-10120	M8	6.4	9.5	M6	4.4	10	Tr10x2	17	Tr10x2[92]	14.50
SLW-1660	8.6	9.0	11	M8	5.5	16	Tr14x4	20	Tr14x4[92]	18.5
SLW-2080	8.6	9.0	14	M8	5.5	20	Tr18x4	26	12h9	23.0
SLW-25120	12.6	11.0	15	M10	5.0	25	Tr24x5	38	14h9	30.0

[92] Lead screw end unmachined; [94] Carriages also in 100, 150, 200 and 250 mm lengths available on request

drylin® SLW | Linear modules | Product range

Preload version

- Radial and axial pre-load
- Manual adjustable clearance
- High torsional stability
- Fully supported
- Aluminium drylin® W guide rails, hard anodised
- Available accessories ▶ **Page 1357**
- Lead screw nuts are available separately ▶ **Page 1200**
- Available with motor ▶ **Page 1311**

Order key
complete ▶ Page 1258

SLWE-1040-PL

- Preload
- Dimension
- Adjustable clearance
- Compact Type

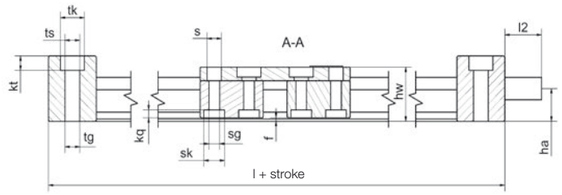

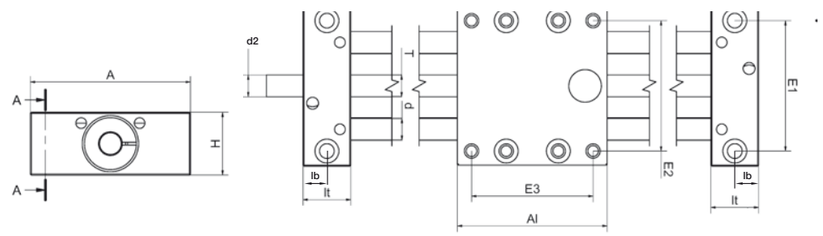

Technical data ▶ See SLW on left side

Dimensions [mm]

Part No.	A –0.3	Al[94] –0.3	H	E1 ±0.15	E2 ±0.15	E3 ±0.15	l	hw	f	lt	lb	tk	ts
SLWE-1040-PL	74	69	29	60	60	56	113	24	1.5	22	11	11	6.8
SLWE-1080-PL	108	100	29	94	94	87	144	24	1.5	22	11	11	6.8
SLWE-1660-PL	104	100	37	84	86	82	150	35	1.5	25	12.5	15	9.0
SLWE-2080-PL	134	150	46	116	116	132	206	44	1.5	28	14	15	8.6

Part No.	tg	kt ±0.1	s	sk	sg	kq	d	T	l2	d2 Standard	ha
SLWE-1040-PL	M8	6.4	6.6	9.5	M6	4.4	10	Tr10x2	17	Tr10x2[92]	14.5
SLWE-1080-PL	M8	6.4	6.6	9.5	M6	4.4	10	Tr10x2	17	Tr10x2[92]	14.5
SLWE-1660-PL	M10	8.6	9.0	11.0	M8	5.5	16	Tr14x4	20	Tr14x4[92]	18.5
SLWE-2080-PL	M10	8.6	9.0	14.0	M8	5.5	20	Tr18x4	26	12h9	23.0

[92] Lead screw end unmachined; [94] Carriages also in 100, 150, 200 and 250 mm lengths available on request

drylin® SLW | Linear modules | Product range

With ball bearing lead screw supports

- Lower drive force
- Optimised clearance
- Up to 1,500 rpm (according to length and load)
- Aluminium drylin® W guide rails, hard anodised
- Quiet operation – reduced vibration of the overall system
- Ball bearings in both shaft end supports
- Available accessories ▶ **Page 1357**
- Lead screw nuts are available separately ▶ **Page 1200**
- Available with motor ▶ **Page 1311**

Order key
complete ▶ Page 1258

SLWE-BB-1040

- Dimension
- Ball bearing
- Adjustable
- Compact Type

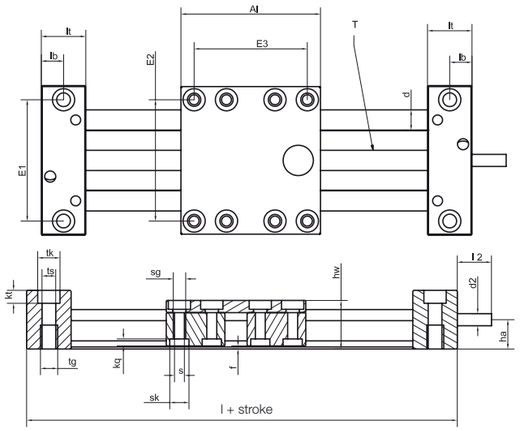

Technical data

Part No.	Design[96]	Max. stroke length	Weight	Additional (per 100 mm)	Max. stat. load capacity Axial	Max. stat. load capacity Radial	Max. rotation speed	Max. feed rate
		[mm]	[kg]	[kg]	[N]	[N]	[1/min]	[m/min]
SLW-BB-0630	■	300	0.25	0.08	100	200	1,000	1.5
SLWE-BB-1040	●	500	0.90	0.10	500	2,000	1,500	3.0
SLWE-BB-1080	●	500	1.10	0.20	500	2,000	1,500	3.0
SLWE-BB-1660	●	750	1.80	0.30	700	2,800	1,500	6.0
SLWE-BB-2080	●	900	3.30	0.40	1,250	5,000	1,500	6.0

Dimensions [mm]

Part No.	A -0.3	Al -0.3	H	E1 ±0.15	E2 ±0.15	E3 ±0.15	l	hw	f	lt	lb	tk	ts	tg
SLW-BB-0630	54	60	20	40	45	51	112	18	1.2	26	14	11	6.8	M8
SLWE-BB-1040	74	69	29	60	60	56	129	24	1.5	30	19	11	6.8	M8
SLWE-BB-1080	108	100	29	94	94	87	160	24	1.5	30	19	11	6.8	M8
SLWE-BB-1660	104	100	37	84	86	82	170	35	1.5	35	22.5	15	9.0	M10
SLWE-BB-2080	134	150	46	116	116	132	230	44	1.5	40	26	15	8.6	M10

Part No.	kt ±0.1	sk	sg	kq	s	d	T	l2	d2 Standard	d2[95] Upon request	ha
SLW-BB-0630	8.0	7.0	M4	2.0	4.5	6	Tr8x1.5	15	Tr08x1.5	–	9.5
SLWE-BB-1040	6.4	9.5	M6	4.4	6.6	10	Tr10x2	17	Tr10x2	6 h9	14.5
SLWE-BB-1080	6.4	9.5	M6	4.4	6.6	10	Tr10x2	17	Tr10x2	6 h9	14.5
SLWE-BB-1660	8.6	11.0	M8	5.5	9.0	16	Tr14x4	20	Tr14x4	8 h9	18.5
SLWE-BB-2080	8.6	14.0	M8	5.5	9.0	20	Tr18x4	26	12 h9	–	23.0

[95] Optional machined lead screw end [96] Double rails, square ▶ Page 900, round ▶ Page 904

drylin® SLW | Linear modules | Product range

Compact with high helix thread

- Pitch 08x15, 10x12, 10x50, 18x100
- High torsional stability
- Aluminium drylin® W guide rails, hard anodised
- BB-version with ball bearings lead screw supports available
- Available accessories ▶ **Page 1357**
- Lead screw nuts are available separately ▶ **Page 1200**

Order key
complete ▶ Page 1258

SLWS-0630-08x15

- Lead
- Dimension
- High helix thread
- Compact Type

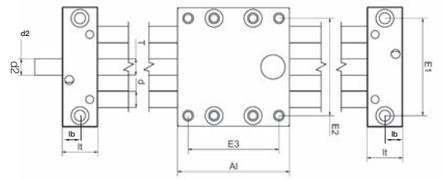

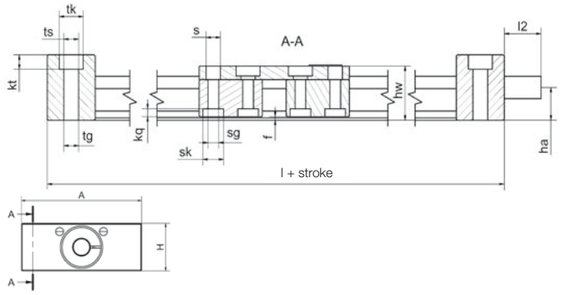

Technical data and dimensions [mm]

Part No.	Design [96]	Max. stroke length	Weight	Additional (per 100 mm)	Max. stat. load capacity Axial	Max. stat. load capacity Radial
			[kg]	[kg]	[N]	[N]
SLWS-0630-08X15	■	300	0.2	0.08	50	200
SLWS-1040-10X12	●	750	0.7	0.10	100	400
SLWS-1040-10X50	●	750	0.7	0.10	100	400
SLWS-1080-10X12	●	750	0.9	0.20	100	400
SLWS-1080-10X50	●	750	0.9	0.20	100	400
SLWS-2080-18X100	●	750	0.9	0.20	400	1,600

Part No.	A -0.3	Al -0.3	H	E1 ±0.15	E2 ±0.15	E3 ±0.15	l	hw	f	lt	lb	tk	ts	tg
SLWS-0630-08X15	54	60	20	40	45	51	100	17.5	1.2	20	10	11	6.6	–
SLWS-1040-10X12	74	69	29	60	60	56	113	24	1.5	22	11	11	6.8	M8
SLWS-1040-10X50	74	69	29	60	60	56	113	24	1.5	22	11	11	6.8	M8
SLWS-1080-10X12	108	100	29	94	94	87	144	24	1.5	22	11	11	6.8	M8
SLWS-1080-10X50	108	100	29	94	94	87	144	24	1.5	22	11	11	6.8	M8
SLWS-2080-18X100	134	150	46	116	116	132	206	44	1.5	28	14	15	8.6	M10

Part No.	kt ±0.1	s	sk	sg	kq	d	T	l2	d2	ha
SLWS-0630-08X15	8.0	4.5	7.0	M4	2.0	6	Sg08x15	15	Sg8x15 [92]	9.5
SLWS-1040-10X12	6.4	6.6	9.5	M6	4.4	10	Sg10x12	17	Sg10x12 [92]	14.5
SLWS-1040-10X50	6.4	6.6	9.5	M6	4.4	10	Sg10x50	17	Sg10x50 [92]	14.5
SLWS-1080-10X12	6.4	6.6	9.5	M6	4.4	10	Sg10x12	17	Sg10x12 [92]	14.5
SLWS-1080-10X50	6.4	6.6	9.5	M6	4.4	10	Sg10x50	17	Sg10x50 [92]	14.5
SLWS-2080-18X100	12.6	11.0	15	M8	5.0	25	Sg18x100	38	14h9	30.0

[92] Lead screw end unmachined [96] Double rails, square ▶ Page 900, round ▶ Page 904

drylin® SLW | Linear modules | Product range

With protected lead screw

- drylin® W profile rail as a protective mechanism
- Available with pitches 10x2, 10x12,10x50
- Low profile design
- Available with motor ▶ **Page 1311**

Order key

complete ▶ Page 1258

SLW-BB-PT-1040

- Dimension
- Protect
- Ball bearing
- Compact Type

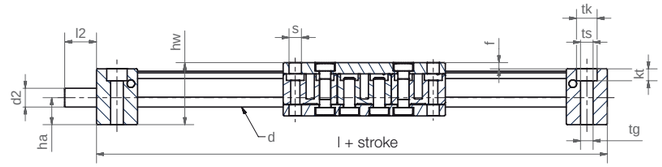

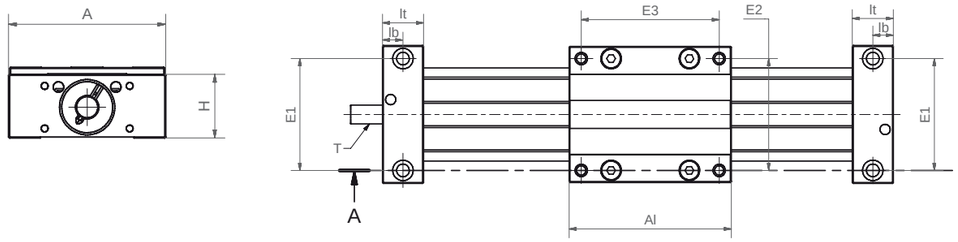

Technical data

Part No.	Max. stroke length [mm]	Weight [kg]	Additional (per 100 mm) [kg]	Max. stat. load capacity Axial [N]	Max. stat. load capacity Radial [97] [N]	End block material
SLW-PT-1040	750	0.75	0.20	700	2,000	aluminium
SLW-BB-PT-1040	750	1.10	0.20	500	2,000	aluminium

Dimensions [mm]

Part No.	A -0.3	Al -0.3	H	E1/E2 ±0.15	E3 ±0.15	l	hw	f	lt	lb	tk	ts	tg
SLW-PT-1040	74	87	29	60	74	131	33.25	3.25	22	11	11	6.8	M8
SLW-BB-PT-1040	74	87	29	60	74	147	33.25	3.25	30	19	11	6.8	M8

Part No.	kt ±0.1	d	T	l2	d2	d2[98]	ha
SLW-PT-1040	6.4	10	Tr10x2	17	Tr10x2	6 h9	14.50
SLW-BB-PT-1040	6.4	10	Tr10x2	17	Tr10x2	6 h9	14.50

[97] Depends on load and rotation speed [98] Thread/remaining thread visible

drylin® SLW | Linear modules | Product range

Two linear units are rolled into one

- Carriages can be controlled separately
- Different lead screw pitches can be applied
- Separate manual adjustment of carriages
- High flexibility
- Clearance adjustment (optional)

Order key

complete ▶ Page 1258

SLWT-1080

- Dimension
- Double linear unit
- Compact Type

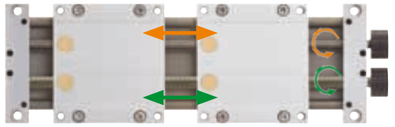

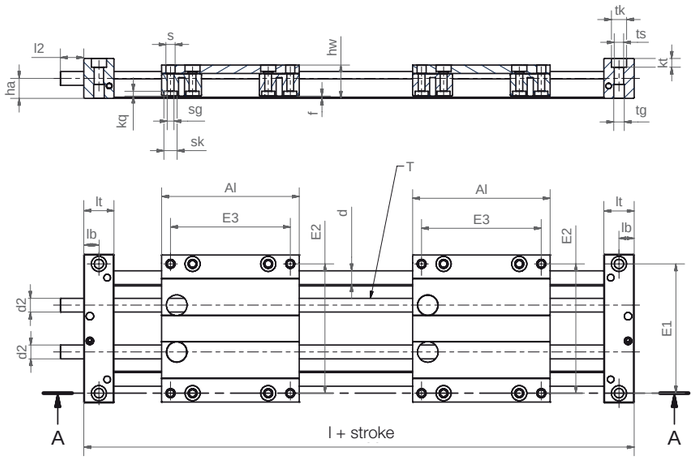

Technical data

Part No.	Max. stroke length [mm]	Weight [kg]	Additional (per 100 mm) [kg]	Max. stat. load capacity Axial [N]	Max. stat. load capacity Radial [N]	End block material
SLWT-1080	750	1.6	0.25	700	2,000	aluminium

Dimensions [mm]

Part No.	A -0.3	Al -0.3	H	E1 ±0.15	E2 ±0.15	E3 ±0.15	l	hw	f ±0.1	lt	lb	tk	ts
SLWT-1080	108	100	29	94	94	87	244	24	1.5	22	11	11	6.8

Part No.	tg ±0.1	kt	sk	s	sg	kq Standard	kq Alternative	d	T	l2	d2	d2	ha
SLWT-1080	M8	6.4	9.5	6.6	M6	4.4	10	Tr10x2[92]	17	Tr10x2	6 h9	14.50	

[92] Lead screw end unmachined

drylin® SLW | Linear modules | Product range

Made of stainless steel

- Stainless steel version with corrosion resistant steel components (1.4305, 1.4408 or 1.4571)
- Choice of bearing material:
  iglidur® J = Standard
  iglidur® A180 = FDA-compliant
  iglidur® X = High temperature up to +150 °C [117)]
- Available accessories
  ▶ Page 1357

Order key
complete ▶ Page 1258

SLW-ESJ-1040

- Dimension
- Bearing material: iglidur® J
- Stainless steel
- Compact Type

STAIN-LESS STEEL

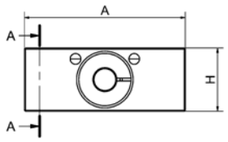

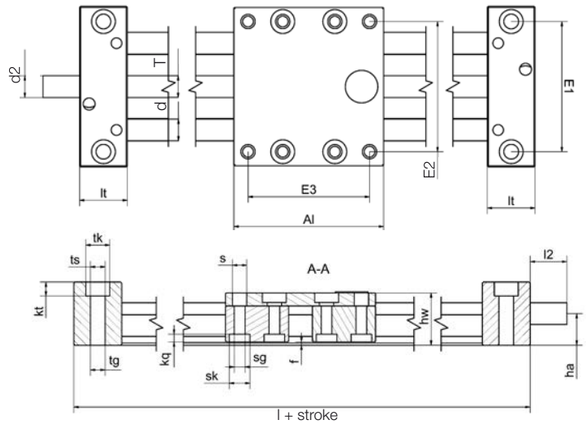

Technical data

Part No.	Shafts-Ø	Max. stroke length	Weight	Additional (per 100 mm)	Max. stat. load capacity	
	[mm]	[mm]	[kg]	[kg]	axial [N]	radial [N]
SLW-ESJ-1040	10	750	1.4	0.2	700	2,800
SLW-ESX-1040	10	750	1.4	0.2	700	2,800
SLW-ESA180-1040	10	750	1.4	0.2	700	2,800
SLW-ESJ-2080	20	1,000	5.7	0.64	1,600	6,400
SLW-ESA180-2080	20	1,000	5.7	0.64	1,600	6,400

Dimensions [mm]

Part No.	A	Al	H	E1	E2	E3	l	hw	f	lt	lb	tk	ts	tg
	–0.3	–0.3		±0.15	±0.15	±0.15								
SLW-ES-1040	74	100	29	60	60	87	144	24	1.5	22	11	11	6.8	M8
SLW-ES-2080	134	150	46	116	116	132	206	44	1.5	28	14	15	8.6	M10

Part No.	kt	s	sk	sg	kq	d	T	l2	d2	ha
	±0.1								Standard	
SLW-ES-1040	6.4	6.6	9.5	M6	4.4	10	Tr10x2	17	Tr10x2[92)]	14.5
SLW-ES-2080	8.6	9.0	14	M8	5.5	20	Tr18x4	26	12h9	23.0

92) Lead screw end unmachined

117) In the event of severe temperature fluctuations during transport, storage and use, thermal expansion effects cannot be ruled out

My sketches

drylin® SLW linear modules

drylin® SLW | XY-tables | Product range

Compact XY-tables for manual adjustments

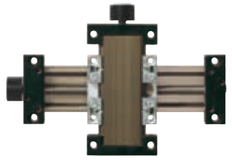

SLW-XY-0630

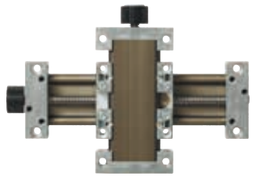

SLW-XY-1040

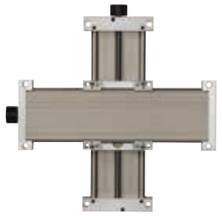

SLW-XY-1080

- Aluminium drylin® W guide rails, hard anodised
- Preload version SLWE-XY-PL also available (optional, sizes: 1040/1080)
- Available accessories ▶ **Page 1357**

Order key
complete ▶ **Page 1258**

SLW-XY-1040-PL

- Preload (optional with sizes 1040 and 1080)
- Dimension
- XY-table
- Compact Type

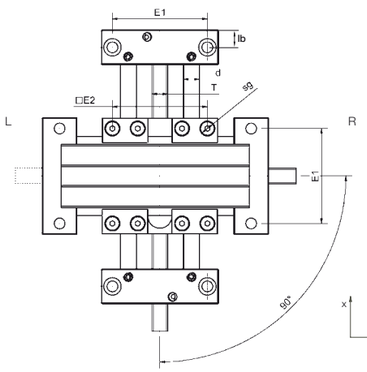

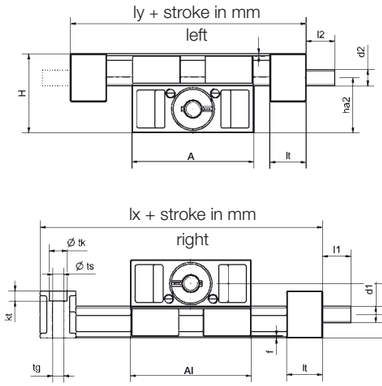

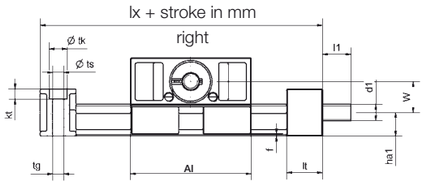

Dimensions [mm]

Part No.	Max. stroke length	A	Al	H	E1	E2	Basic length	Basic length	f	lt	lb	tk	ts	tg	kt
	[mm]	–0.3			±0.15	±0.15	lx	ly							
SLW-XY-0630	150	54	54	38	40	45	94	94	1.5	20	10	11	6.6	–	8
SLW-XY-1040	300	74	73	48	60	60	117	117	1.5	22	11	11	6.8	M8	6.4
SLW-XY-1080	300	108	107	48	94	94	151	151	1.5	22	11	11	6.8	M8	6.4

Dimensions [mm]

Part No.	sg	d	T	l1	d1	d1	l2	d2	d2	ha1	ha2	W
					Standard	Alternative		Standard	Alternative			ha2–ha1
SLW-XY-0630	M4	5	M8	15	M8	–	15	M8	–	9.5	28.5	18.4
SLW-XY-1040	M6	10	Tr10x2	17	Tr10x2	6 h9	17	Tr10x2	6 h9	14.5	33.5	20
SLW-XY-1080	M6	10	Tr10x2	17	Tr10x2	6 h9	17	Tr10x2	6 h9	14.5	33.5	19

The hand wheel can be ordered left- or right-mounted in the y-direction.
Left: SLW-XY-1040-L-200-300 for 200 mm stroke length on the x-axis and 300 mm on the y-axis
Right: SLW-XY-1040-R-200-300 for 200 mm stroke length on the x-axis and 300 mm on the y-axis

drylin® SLW | XY-tables | Product range

XY-tables – stainless steel version

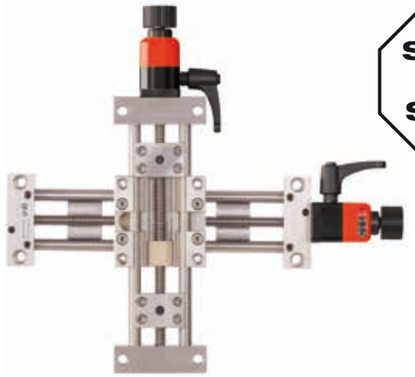

STAIN-LESS STEEL

- For manual adjustments
- High torsional stability
- Structure entirely made from VA and V4A stainless steel materials
- Chemical and corrosion resistant
- Available accessories ▶ **Page 1357**

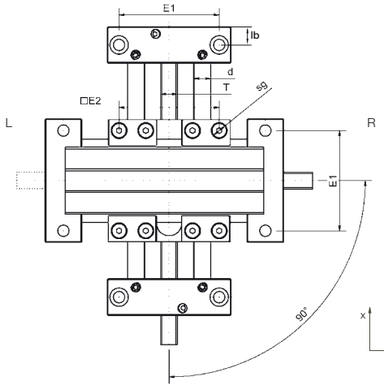

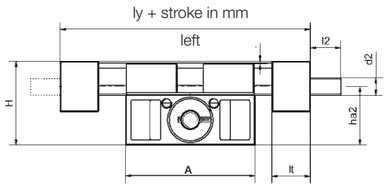

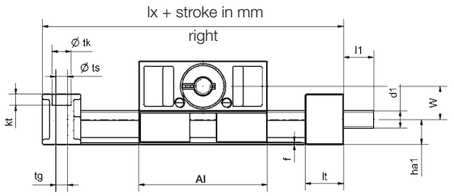

Dimensions [mm]

Part No.	Max. stroke length	A	Al	H	E1	E2	Basic length	Basic length	f	lt	lb	tk	ts	tg	kt
	[mm]	–0.3			±0.15	±0.15	lx	ly				±0.1			
SLW-XY-ESJ-1040	300	74	73	48	60	60	117	117	1.5	22	11	11	6.8	M8	6.4

Dimensions [mm]

Part No.	sg	d	T	l1	d1	d1	l2	d2	d2	ha1	ha2	W
					Standard	Alternative		Standard	Alternative			ha2–ha1
SLW-XY-ESJ-1040	M6	10	Tr10x2	17	Tr10x2	6 h9	17	Tr10x2	6 h9	14.5	33.5	19

The hand wheel can be ordered left- or right-mounted in the y-direction.
Left: SLW-XY-ESJ-1040-L-200-300 for 200 mm stroke length on the x-axis and 300 mm on the y-axis
Right: SLW-XY-ESJ-1040-R-200-300 for 200 mm stroke length on the x-axis and 300 mm on the y-axis

drylin® SLW | Linear modules | Order key

Order key complete system:

SLW-1040-150-HR-ES

Lead screw material
- **Blank:** Steel C15 (standard)
- **ES:** Stainless steel 1.4305
- **AL:** Anodised aluminium

Additional options
- **Blank:** Without extras (standard)
- **HK:** Lead screw clamp
- **PA:** Position indicator
- **HR:** Hand wheel
- **PL:** Preloaded
- **Z:** Pins in TR10x2 (optional)
- **WT:** V-drive

Stroke length in mm

Dimensions
- **0630:** Shaft ø 6 mm, width 30 mm (SLW, SLWS)
- **1040:** Shaft ø 10 mm, width 40 mm (SLW, SLWE)
- **1080:** Shaft ø 10 mm, width 80 mm (SLW, SLWE)
- **1660:** Shaft ø 16 mm, width 60 mm (SLW, SLWE)
- **2080:** Shaft ø 20 mm, width 80 mm (SLW, SLWE)
- **25120:** Shaft ø 25 mm, width 120 mm (SLW)

Type
- **SLW:** Standard
- **SLWE-PL:** With preload
- **SLWE-BB:** Leadscrew drive with ball-bearing
- **SLWS:** With high helix lead screw
- **SAW:** High design
- **SLW-ES:** Stainless steel version
- **SLW-XY:** XY-tables

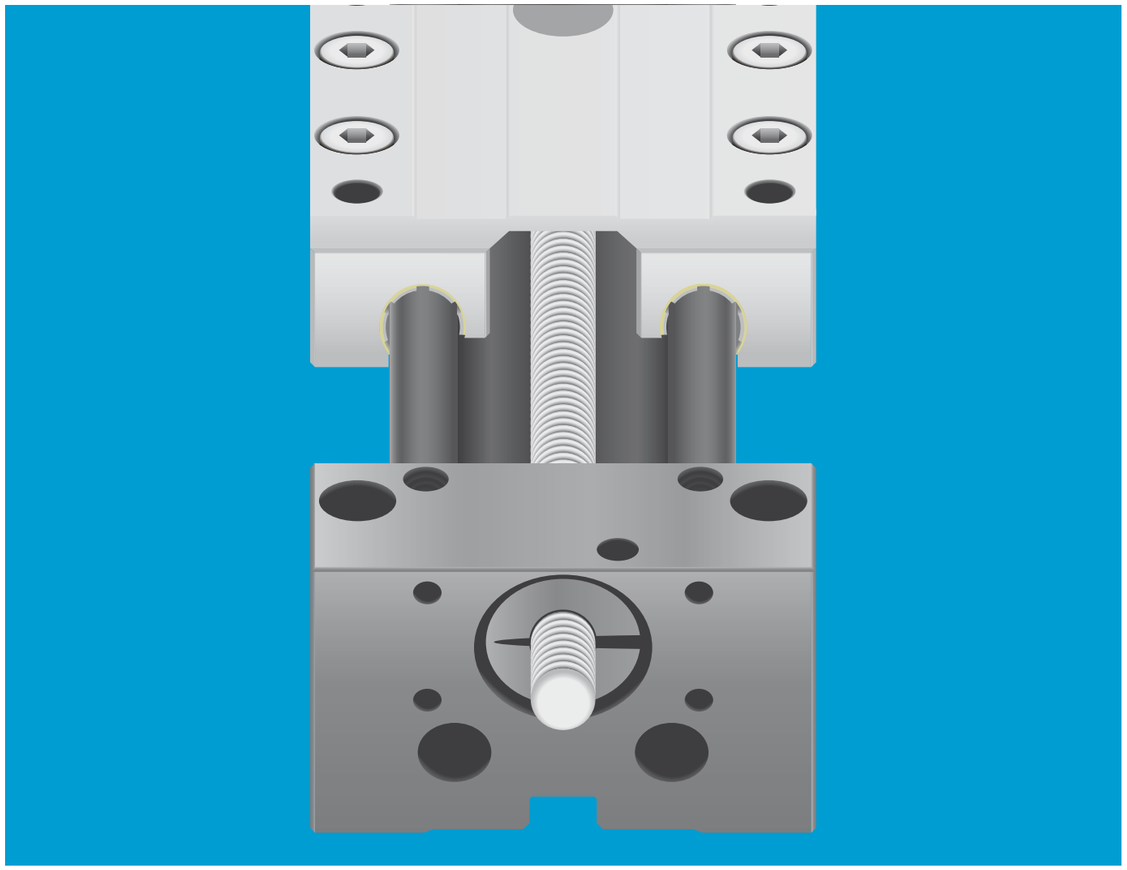

drylin® general drive technology – linear modules SAW

Lubrication-free linear modules based on drylin® W guides

Trapezoidal or high-helix lead screw drives

Robust design

Ready-to-install stepper or DC motors

Dynamic ball bearing

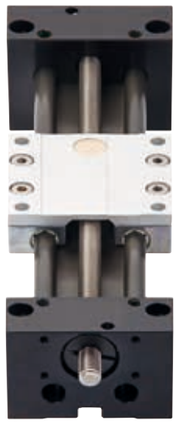

drylin® SAW | Linear modules | Advantages

Compact high design

Lubrication-free linear modules – drylin® SAW

The drylin® W high profile provides the torsion-resistant base for the linear axes of the SAW series. Thanks to the ball-bearing lead screw and high-profile design, the SAW linear modules are perfectly suitable for the direct connection to stepper or DC motors. Slots in profile sections enable initiators to be freely positioned and, at the same time, enable set-up as a multi-axis linear robot by means of suitable adapter plates.

- Optimised unit for motor connection
- drylin® W high profile with variable mounting options using clamping elements / slot nuts
- For manual or electrical adjustments
- Ideal for single and/or multi-axial constructions

Typical application areas

- Positioning functions
- 3D scanner
- Format adjustments
- Linear robot structures
- Height adjustments

Available in 3-8 days
Detailed information about delivery time online.

Block pricing online
No minimum order value. From batch size 1.

Carriage lengths: 60-250 mm
Carriage widths: 54-107 mm
Stroke lengths: up to 750 mm

Product finder
▶ **www.igus.eu/saw-productfinder**

drylin® SAW | Linear modules | Product overview

Dynamic ball bearing

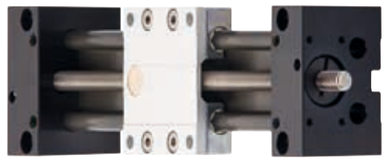

Linear module SAW

- Robust high design in 4 sizes
- Trapezoidal or high-helix lead screw drives
- For manual positioning or motorised operation

▶ **Page 1262**

Linear module SAWC

- Compact short design
- With integrated drylin® E lead screw motor
- Optimised ratio of useful length to total length

▶ **Page 1263**

Linear module DLE

- Configured linear modules with NEMA stepper motors
- Available in 24 hours
- Pre-assembled and tested

▶ **Page 1264**

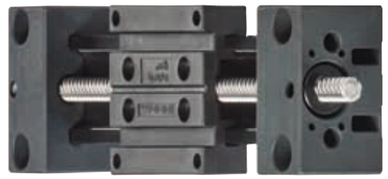

Linear module SAW-P

- Dynamic linear module with drylin® W carbon profile
- Extremely lightweight and robust
- Stroke lengths up to 300 mm

▶ **Page 1088**

drylin® SAW | Linear modules | Product range

Dynamic in high design

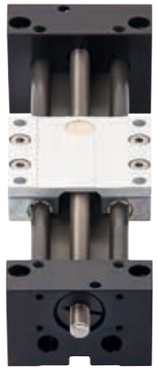

- Trapezoidal or high helix threads
- Ball bearing lead screw supports
- Rail profile in high design, extremely torsion-resistant
- Aluminium drylin® W guide rails, hard anodised
- High stability
- Cost-effective and 100% lubrication-free
- Available accessories ▶ **Page 1357**
- Lead screw nuts are available separately ▶ **Page 1200**

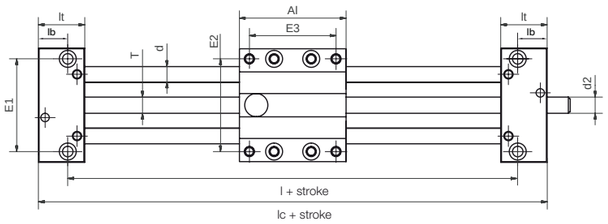

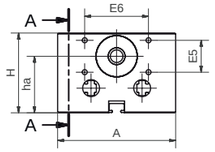

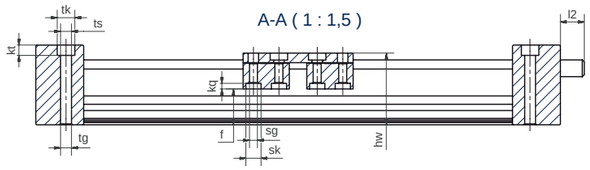

Technical data

Part No.	Max. stroke length [mm]	Weight [kg]	Additional (per 100 mm)	Max. speed [U/min.]	Max. stat. load capacity Axial [N]	Radial [N]
SAW-0630	300	0.5	0.1	1,000	100	400
SAW-1040	500	1.0	0.1	1,500	500	2,000
SAW-1080	750	1.9	0.2	1,500	750	2,000
SAW-1660	750	2.8	0.5	1,500	750	3,000

Dimensions [mm]

Part No.	A -0.3	Al -0.3	H	E1 +0.15	E2 +0.15	E3 +0.15	E5	E6	l	lc	hw	f	lt	lb
SAW-0630	54	60/100	32	40	45	51/91	11	23	112/152	92	30	13.5	26	10
SAW-1040	74	69/100/150	50	60	60	56/87/137	20	40	129/160/210	91	45	22.5	30	19
SAW-1080	108	100	58	94	94	87	–	–	163	131.5	49	22.5	31.5	15.75
SAW-1660	104	150	77	84	86	132	20	40	220	175	72	38.5	35	22.5

Part No.	tk	ts	tg	kt ±0.1	sk	sg	kq	d	T Ø	l2	d2	ha
SAW-0630	11	6.6	–	20	–	M4	10	□5	Tr8x1.5	15	Tr8x1.5	21.5
SAW-1040	11	6.8	M8	6.4	9.5	M6	3.5	10	Tr10x2	17	Tr10x2 Ø6 h9[113)]	35.5
SAW-1080	11	6.8	M8	18	9.5	M6	3.5	10	Tr12x3	17	Tr12x3 Ø8 h9[113)]	37.5
SAW-1660	15	9.0	M10	8.6	11	M8	5.5	16	Tr14x4	20	Tr14x4 Ø8 h9[113)]	59.0

[113)] **Lead screw end unmachined, also available with machined end**

drylin® SAWC | Linear modules | Product range

Direct drive in short design

- Smaller installation space and more stroke
- Compact short design due to the use of drylin® E lead screw motors
- Optimised ratio of useful length to total length (compared to the SAW series, up to 70 mm)
- Improved operating characteristics
- Space saving and low weight
- Available accessories ▶ **Page 1357**

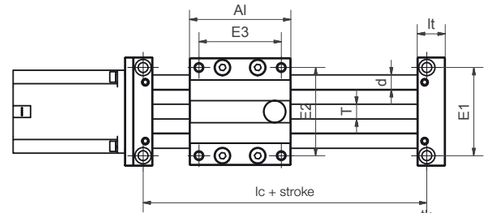

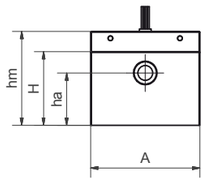

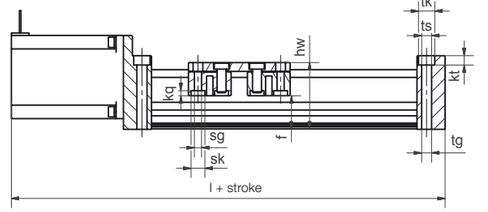

Technical data

Part No.	Max. stroke length [mm]	Weight [kg]	Additional (per 100 mm)	Max. speed [U/min.]	Max. stat. load capacity Axial [N]	Radial [N]
SAWC-0630	300	0.5	0.1	1,000	100	200
SAWC-1040	500	1.0	0.1	1,500	500	2,000

Dimensions [mm]

Part No.	A -0.3	Al -0.3	H	E1 +0.15	E2 +0.15	E3 +0.15	l	lc	hw	f	lt	lb
SAWC-0630	54	50	42.5	40	45	51	139	75	30	13.5	15	7.5
SAWC-1040	74	69	50	60	60	56	183	82	45	22.5	19	9.5

Part No.	tk	ts	tg	kt ±0.1	sk	sg	kq	d	T Ø	ha
SAWC-0630	8	4.2	M5	20	7	M4	2	5	Tr08x1.5 Sg08x15	21.5
SAWC-1040	11	6.8	M8	6.4	9.5	M6	3.5	10	Tr10x2 [92)] Sg10x12	35.5

[92)] **Lead screw end unmachined**

drylin® DLE | Linear modules | Product range

Linear modules with motor – deliverable within 24 hours from stock

- drylin® linear modules with motor
- Available from stock
- Ready-to-install and pre-assembled
- NEMA stepper motors with stranded wires
- Available accessories ▶ **Page 1357**

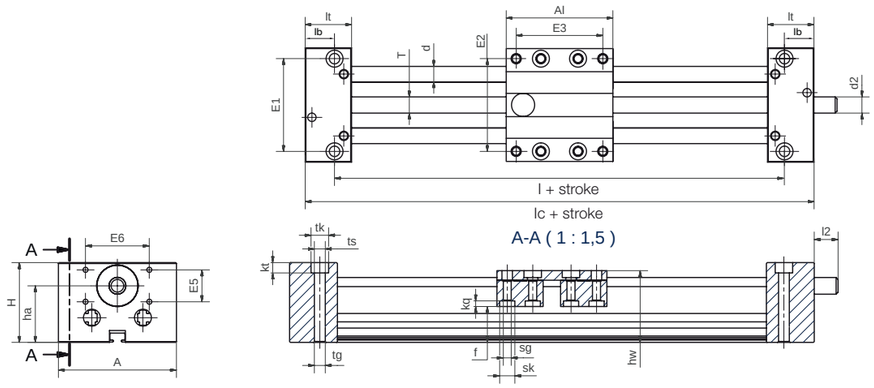

Technical data

Part No.	Max. stroke length [mm]	Weight [kg]	Additional (per 100 mm)	Max. speed [U/min.]	Max. stat. load capacity Axial [N]	Radial [N]
DLE-SA-0004	300	0.5	0.1	1,000	100	400
DLE-SA-0005	500	1.0	0.1	1,500	500	2,000
DLE-SA-0006	750	1.9	0.2	1,500	750	2,000

Dimensions [mm]

Part No.	A -0.3	Al -0.3	H	E1 +0.15	E2 +0.15	E3 +0.15	E5	E6	l	lc	hw	f	lt	lb
DLE-SA-0004	54	60/100	32	40	45	51/91	11	23	112/152	92	30	13.5	26	10
DLE-SA-0005	74	69/100/150	50	60	60	56/87/137	20	40	129/160/210	91	45	22.5	30	19
DLE-SA-0006	108	100	58	94	94	87	–	–	163	131.5	49	22.5	31.5	15.75

Part No.	tk	ts	tg	kt ±0.1	sk	sg	kq	d	T Ø	l2	d2	ha
DLE-SA-0004	11	6.6	–	20	–	5	10	□5	Tr8x1.5	15	Tr8x1.5	21.5
DLE-SA-0005	11	6.8	M8	6.4	9.5	M6	3.5	10	Tr10x2	17	Tr10x2 Ø6 h9[113)]	35.5
DLE-SA-0006	11	6.8	M8	18	9.5	M6	3.5	10	Tr12x3	17	Tr12x3 Ø8 h9[113)]	37.5

[113)] **Lead screw end unmachined, also available with machined end**

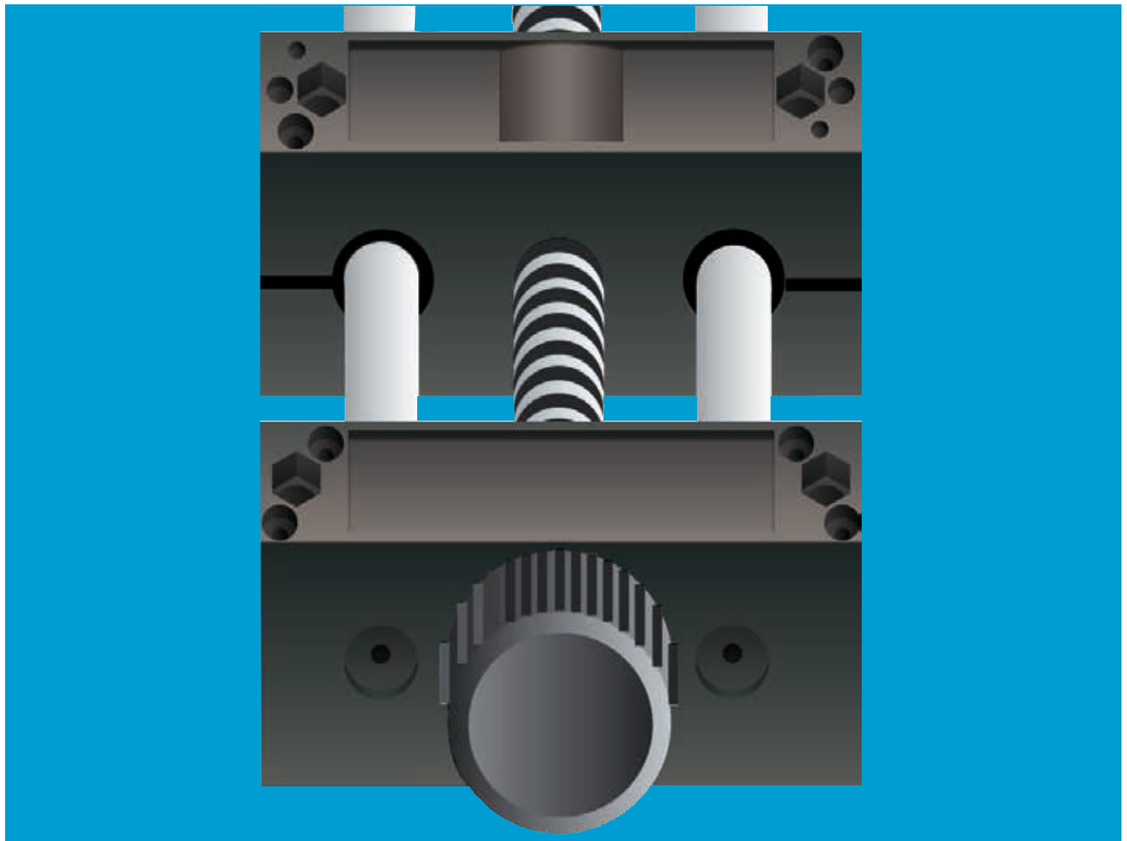

drylin® general drive technology – linear modules SHTP

Lubrication-free polymer linear modules

Drive: trapezoidal thread

Lightweight

Corrosion resistant

Ideal for multi-carriage solutions

drylin® SHTP | Linear modules "light" | Advantages

Light and cost-effective

Shaft end blocks from corrosion resistant, robust plastic

Drive: self-locking trapezoidal thread or fast adjust high helix thread

Plastic guide carriages are available with threads integrated into the housing, also with completely lubrication-free drylin® R liners and drylin® trapezoidal lead screw nuts

Shaft material: aluminium, steel or stainless steel

Lead screw material: steel or stainless steel

For manual adjustment

Extensive accessories available
▶ Page 1357

Lubrication-free linear modules – drylin® SHTP

The drylin® SHTP series is characterised by the weight reducing use of solid plastic components as shaft end supports and carriages. All 3 installation sizes move without lubrication and are configurable with corrosion free materials. This cost-effective alternative with multiple optional accessories is suited for manual adjustment tasks, such as sensor adjustments.

- Very light, flat design
- Ideal for multi-carriage solutions
- Low-cost alternative to home-made solutions

Typical application areas

- Gripper technology
- Format adjustments
- Camera adjustment

Available in 3-8 days
Detailed information about delivery time online.

Block pricing online
No minimum order value. From batch size 1.

Carriage lengths: 26-45 mm
Stroke lengths: up to 500 mm

Product finder
▶ www.igus.eu/shtp-productfinder

drylin® SHTP | Linear modules | Product range

Small and cost-effective – Solid plastic

- Miniature version
- Lightweight
- Very low price
- Corrosion resistant
- Carriages and shaft end supports made from high-performance polymers
- Available accessories
▶ Page 1357

Order key

SHTP-01-06-AWM

- Shaft material
- Dimension
- Design
- Type SHT-Polymer

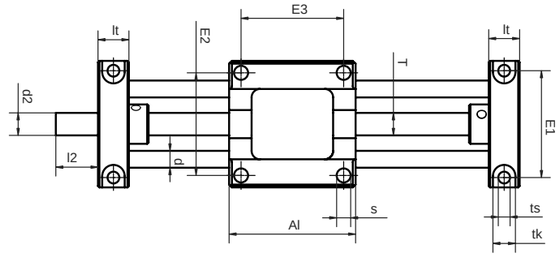

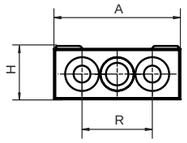

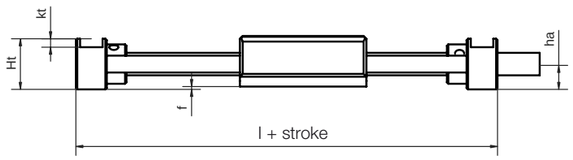

Technical data

Part No.	Max. stroke length [mm]	Aluminium shaft Weight [kg]	Aluminium shaft Additional [kg] (per 100 mm)	Max. stat. load capacity Axial [N]	Max. stat. load capacity Radial [N]	More Information
SHTP-01-06-AWM	300	0.11	0.06	50	50	Carriage, square, with 4 symmetrical mounting holes

Dimensions [mm]

Part No.	A	Al	H	Ht	E1	E2	E3	l	R	f	kt	lt	tk	ts
SHTP-01-06-AWM	45	45	19	18	38	36.5	36.5	67	25	1	3	11	8	42

Part No.	s	d	T	l2	d2[99)]	ha
SHTP-01-06-AWM	5.1	6	M8	15	M8	9

[99)] Lead screw end unmachined (standard)

drylin® SHTP | Linear modules | Product range

Light and robust – Plastic and aluminium

- Lightweight
- Low-profile design
- Ideal for multi-carriage solutions
- Available accessories
  ▶ **Page 1357**

Order key

SHTP-01-10

- Dimension
- Design
- Type SHT-Polymer

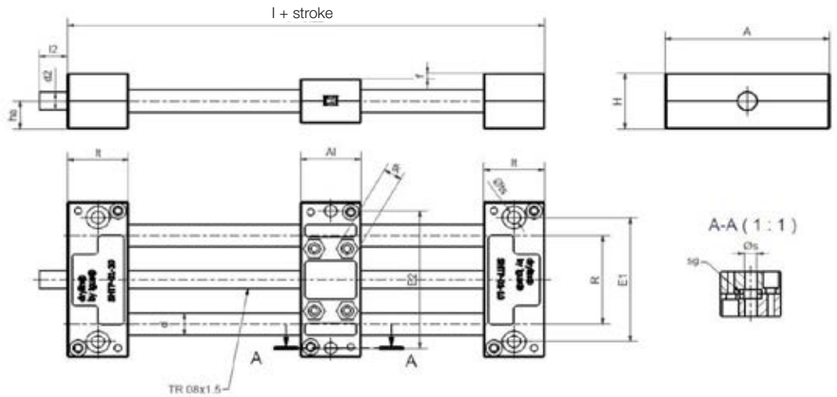

Technical data

Part No.	Max. stroke length [mm]	Aluminium shaft Weight [kg]	Aluminium shaft Additional [kg] (per 100 mm)	More information
SHTP-01-10	350	0.2	0.08	Liners and lead screw nuts made from iglidur® J

Dimensions [mm]

Part No.	A	Al	H	E1	E2	l	R	f	lt ±0.1	tk	ts +0.15
SHTP-01-10	70	26	25	56	62	78	40	2.5	26	8	5.5

Part No.	s	sg	d	T	l2	d2[99]	ha	Max. stat. load capacity Axial [N]	Max. stat. load capacity Radial [N]
SHTP-01-10	5.2	M5	10	Tr08x1.5	15	Tr08x1.5	12.5	100	400

[99] **Lead screw end unmachined (standard)**

drylin® SHTP | Linear modules | Product range

Economical – Solid plastic

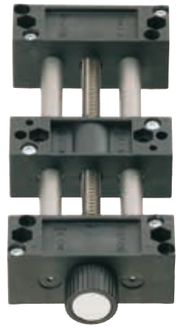

- Solid polymer design
- Lightweight
- Cost-effective
- Corrosion resistant
- Available accessories
  ▶ **Page 1357**
- Available with motor
  ▶ **Page 1311**

Order key

SHTP-01-12-AWM

- Shaft material
- Dimension
- Design
- Type SHT-Polymer

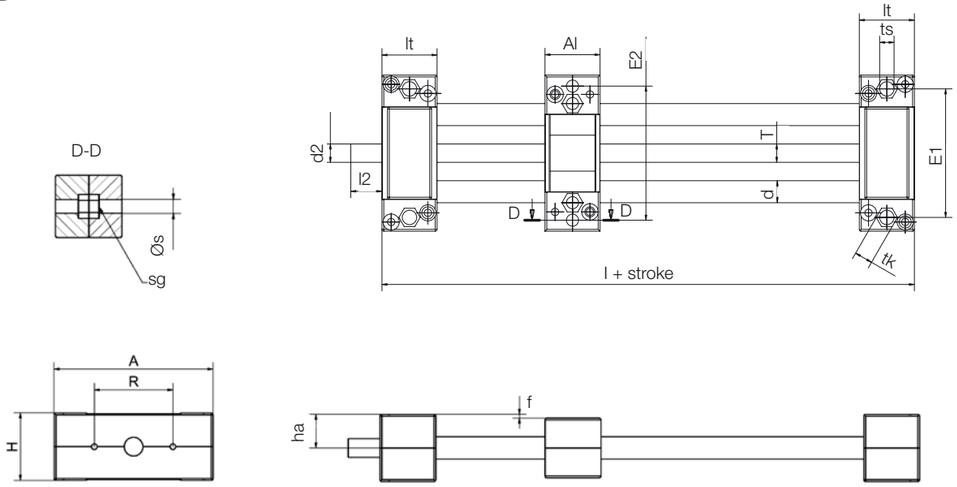

Technical data

Part No.	Max. stroke length [mm]	Aluminium shaft Weight [kg]	Aluminium shaft Additional [kg] (per 100 mm)	More information
SHTP-01-12	500	0.35	0.11	Liners and lead screw nuts made from iglidur® J
SHTP-02-12	500	0.35	0.11	Bearing and nut integrated into the carriage

Dimensions [mm]

Part No.	A	Al	H	E1	E2	l	R	f	lt ±0.1	tk	ts +0.15
SHTP-01-12	85	30	36	70	73	90	42	2	30	10	6.0
SHTP-02-12	85	30	36	70	73	90	42	2	30	10	6.0

Part No.	s	sg	d	T	l2	d2[99]	ha	Max. stat. load capacity Axial [N]	Max. stat. load capacity Radial [N]
SHTP-01-12	6.3	M6	12	Tr10x2	17	Tr10x2	18	200	400
SHTP-02-12	6.3	M6	12	Tr10x2	17	Tr10x2	18	200	400

[99] **Lead screw end unmachined (standard)**

drylin® SHTP | Linear modules | Product range

With "Fast-Forward" quick release mechanism

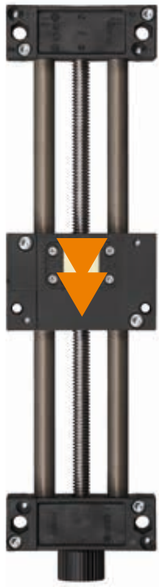

- Light solid polymer model
- For fast format adjustments
- Self-locking
- Variable stroke length
- Only recommended for horizontal applications
- Max. stat. axial load 200 N
- Max. dynamic axial load 50 N
- Available accessories

▶ Page 1357

Order key

SHTP-01-12-AWM-FF

- Fast Forward
- Shaft material
- Dimension
- Design
- Type SHT-Polymer

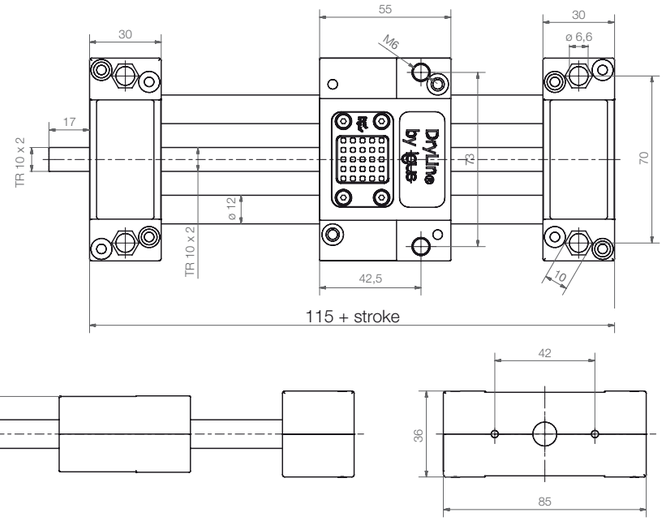

Technical data

Part No.	Max. stroke length [mm]	Weight [kg]	Additional weight (per 100 mm)
SHTP-01-12-AWM-FF [100)]	500	0.35	0.11

[100)] Liners and trapezoidal lead screw nut made from iglidur® J

1.

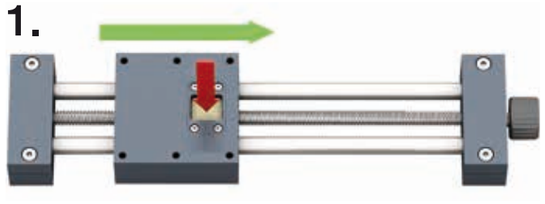

2.

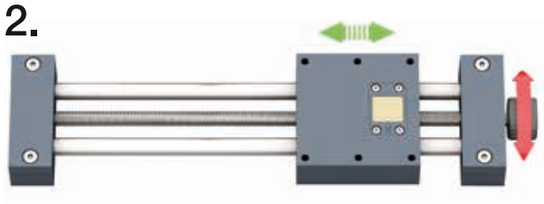

press ▶ disengage ▶ move manually ▶ click into place ▶ fine-tuning

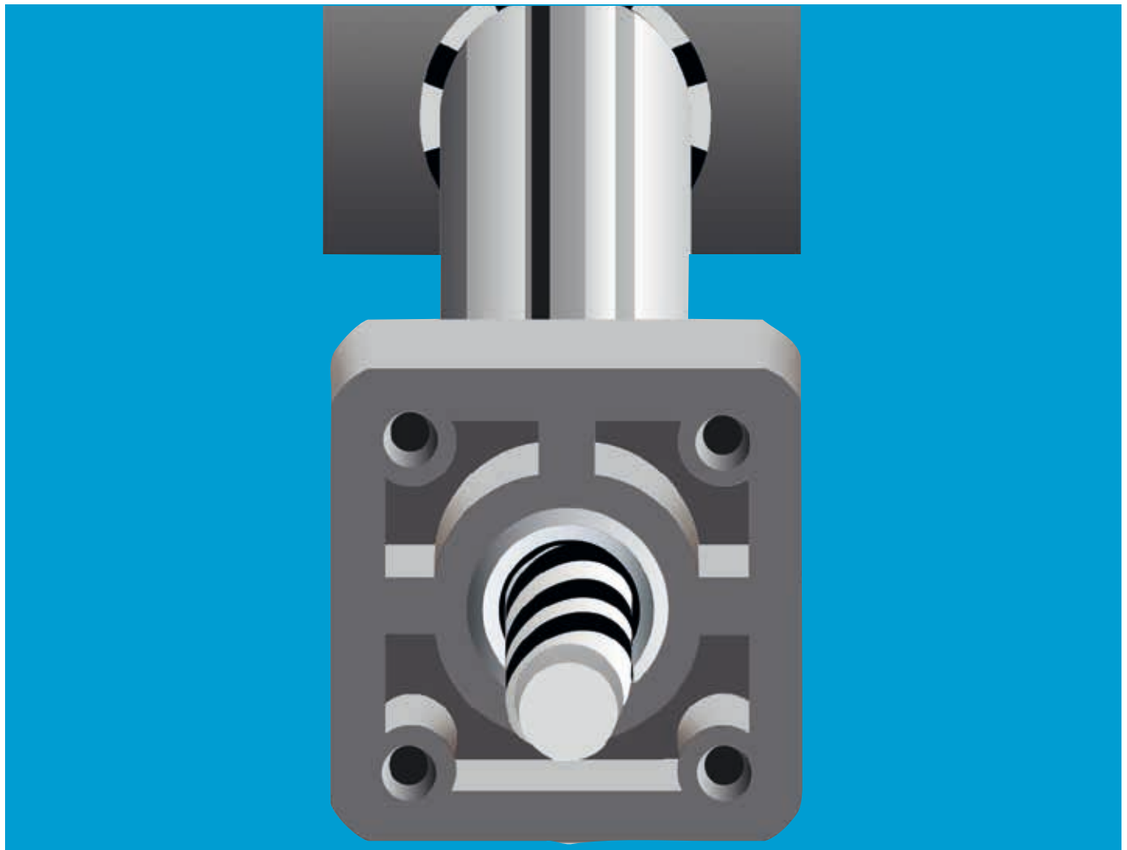

drylin® general drive technology – linear modules SET

- Lubrication-free single-tube adjustment
- Drive: trapezoidal thread
- Simple, smooth design
- Lightweight due to aluminium and plastic
- Temperature resistance up to +50 °C

Single-tube adjustment

Lubrication-free linear unit "easytube"

The linear unit for easy adjustment functions is characterised by a simple but effective and solid design. A complete system is built up from few components. The outer anodised aluminium tube guides the carriages and at the same time protects the trapezoidal lead screw and lead screw nut from external influences. Carriage, torque support and trapezoidal lead screw nut in one component and are made from a special plain bearing high-performance polymer. This guarantees freedom from lubrication with simultaneously low coefficient of friction and optimal wear rates. The iglidur® bearing materials are also used in the axial bearings of the lead screw.

- Protected lead screw
- Effective design
- Available with measurement scale without lead screw
- Flanged version for axial mounting

Typical application areas
- Sensor and camera positioning
- Format adjustment

Available in 3-8 days
Detailed information about delivery time online.

Block pricing online
No minimum order value. From batch size 1.

Carriage lengths: 30-55 mm
Stroke lengths: up to 850 mm

Product finder
▶ www.igus.eu/set-productfinder

Efficient design with protected lead screw and variable mounting

easytube single tube linear unit
- For light format adjustments
- Protected lead screw, torque-resistant
- Trapezoidal or high-helix lead screw drives

▶ Page 1274

easytube with flange, on both sides
- For axial mounting
- Simple, smooth design

▶ Page 1275

easytube with carrier flange on one side
- For horizontal and vertical installation
- Massive aluminium carrier flange on one side
- Space saving structure

▶ Page 1276

easytube with measurement scale
- With lasered, wash-proof scale
- Carriage with clamp
- Available with/without lead screw

▶ Page 1277

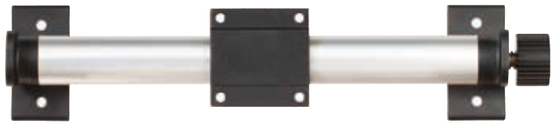

easytube "light"
- Weight-optimised linear carriage
- Compact structure
- Also in flange version available

▶ Page 1278

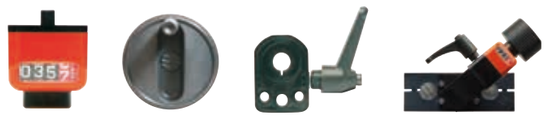

Accessories for linear modules
- Position indicator, hand wheels, screw clamps, angle drives and so on

▶ From Page 1357

drylin® SET | easytube | Product range

easytube

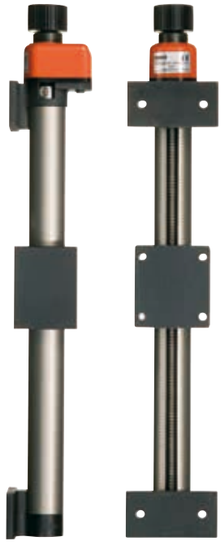

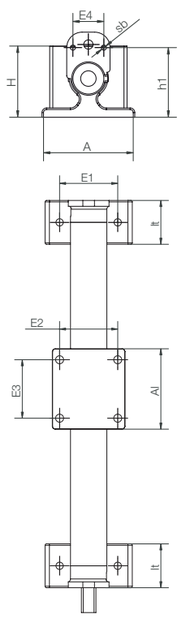

Order key

SET-25-AWM

- Shaft material
- Dimension
- easytube

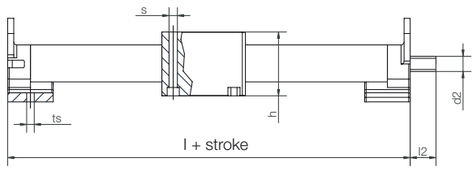

- For simple adjustments
- Trapezoidal lead screw inside
- Corrosion-free with stainless steel lead screw
- Low weight due to aluminium and plastic
- Temperature resistant up to +60 °C
- Available accessories ▶ **Page 1357**

Technical data

Part No.	Max. stroke length	Aluminium shaft		Max. stat. load capacity	
		Weight shaft end supports and carriage	Additional (per 100 mm)	Axial	Radial
	[mm]	[kg]	[kg]	[N]	[N]
SET-12-AWM	200	0.05	0.03	10	20
SET-25-AWM	750	0.15	0.12	150	300
SET-30-AWM	850	0.20	0.21	200	400

Dimensions [mm]

Part No.	A	Al	H	E1	E2	E3	E4	l	h	h1	lt	ts	s	sb	l2	d2 92)
SET-12-AWM	30	30	23.5	20	20	20	–	60	22	–	15	3.3	4.2	–	10	M4
SET-25-AWM	60	55	44	40	40	40	20	115	39	45	30	5.2	5.2	M4	17	Tr10x2
SET-30-AWM	80	55	49	60	40	40	20	125	39	50	35	6.5	5.2	M4	20	Tr12x3

92) Lead screw end unmachined

drylin® SET | easytube | Product range

With flange

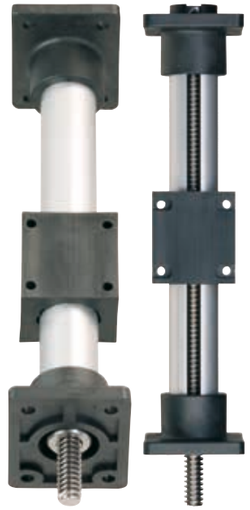

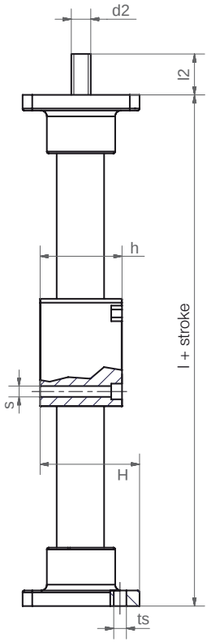

Order key

SET-25-AWM-F

- With flange
- Shaft material
- Dimension
- easytube

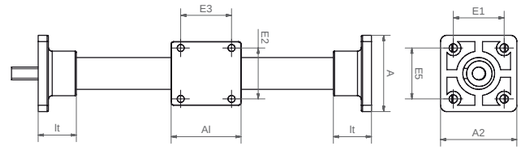

- Flanged version for axial mounting
- Simple, smooth design
- Available accessories ▶ **Page 1357**

Technical data

Part No.	Max. stroke length	Aluminium shaft		Max. stat. load capacity	
		Weight shaft end supports and carriage	Additional (per 100 mm)	Axial	Radial
	[mm]	[kg]	[kg]	[N]	[N]
SET-25-AWM-F	750	0.15	0.12	150	300
SET-30-AWM-F	850	0.20	0.21	200	400

Dimensions [mm]

Part No.	Al	A	A2	H	E1	E2	E3	E5	l	h	lt	ts	s	l2	d2 92)
SET-25-AWM-F	55	60	60	49	40	40	40	40	115	39	30	5.2	5.2	27	Tr10x2
SET-30-AWM-F	55	60	80	59	60	40	40	40	125	39	35	6.5	5.2	30	Tr12x3

92) Lead screw end unmachined

drylin® SET | easytube | Product range

Preloaded on one side

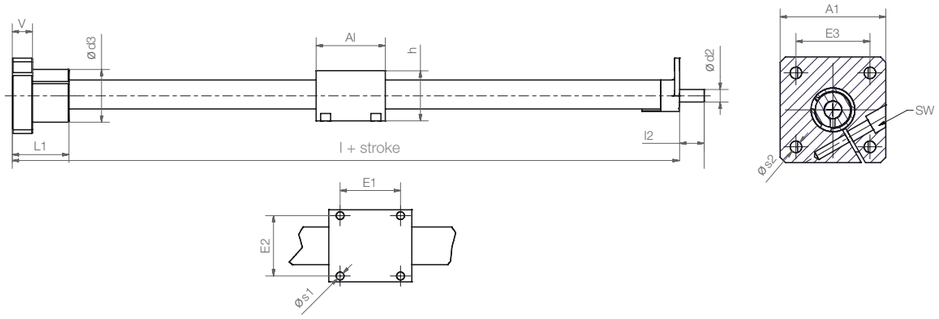

Order key

SETB-25-AWM

- Shaft material
- Dimension
- easytube

- Horizontal and vertical installation at one end
- Ideal for the positioning of sensors and cameras in format adjustments
- Easy assembly
- Flexible installation
- Space saving
- Protected lead screw

Technical data

Part No.	Max. stroke length [mm]	Max. stat. load capacity Axial [N]	Radial at arm [128] [N]
SETB-25-AWM	300	150	12.5

Dimensions [mm]

Part No.	A1	Al	h	E1	E2	E3	V	L1	l2	d2[92]	d3	l	s1	s2	SW
SETB-25-AWM	60	55	39	40	40	42	16	45	17	Tr10x2	42	130	5.2	6.6	5

[92] Lead screw end unmachined

More dimensions on request

[128] The supporting torque at the clamping flange must not exceed 10 Nm

drylin® SET easytube

drylin® SET | easytube | Product range

With measurement scale

Order key

SETM-25-AWM-200-SC

- Scaling
- Stroke length
- Shaft material
- Dimension
- Manual
- without lead screw (optional)
- easytube

- Lasered, wash-proof scale
- Corrosion resistant
- Continuously clamped
- Available with/without lead screw
- 3 stroke lengths available from stock

Technical data		
F radial	[N]	300
Max. extension at maximum load	[mm]	66
Max. extension at nominal load 100 N	[mm]	200
Max. drive force without load	[N]	10
Max. holding strength	[N]	100
Max. stroke length	[mm]	600

Dimensions [mm]

Part no. measurement scale without lead screw	Part no. measurement scale with trapezoidal lead screw 10x2	Stroke length [mm]
SETM-25-AWM-200-SC	SET-25-AWM-200-SC	200
SETM-25-AWM-400-SC	SET-25-AWM-400-SC	400
SETM-25-AWM-600-SC	SET-25-AWM-600-SC	600

More dimensions see SET ▶ Page 1247

drylin® SET | easytube | Product range

Weight-optimised carriage option

- Weight-optimised
- For cost-sensitive adjusting movements
- Simplified solid assembly
- Light, clean and low noise

Order key

SETC-25-AWM

- Shaft material
- Dimension
- easytube

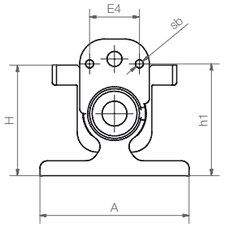

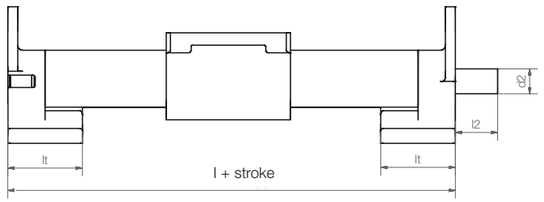

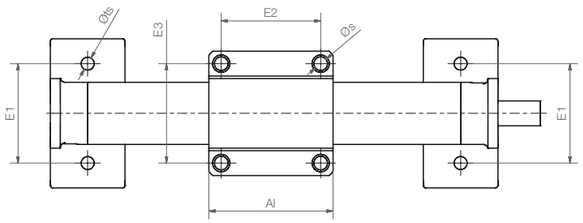

Technical data

Part No.	Weight	Max. stroke length	Max. stat. load capacity	
			Axial	Radial
	[kg]	[mm]	[N]	[N]
SETC-25-AWM	0.15	750	150	300

Dimensions [mm]

Part No.	A	Al	H	E1	E2	E3	E4	l	h1	lt	ts	s	sb	l2	d2[92)]
SETC-25-AWM	60	55	44	40	40	40	20	115	45	30	5.2	5.2	M4	17	Tr10x2

[92)] Lead screw end unmachined

More dimensions on request

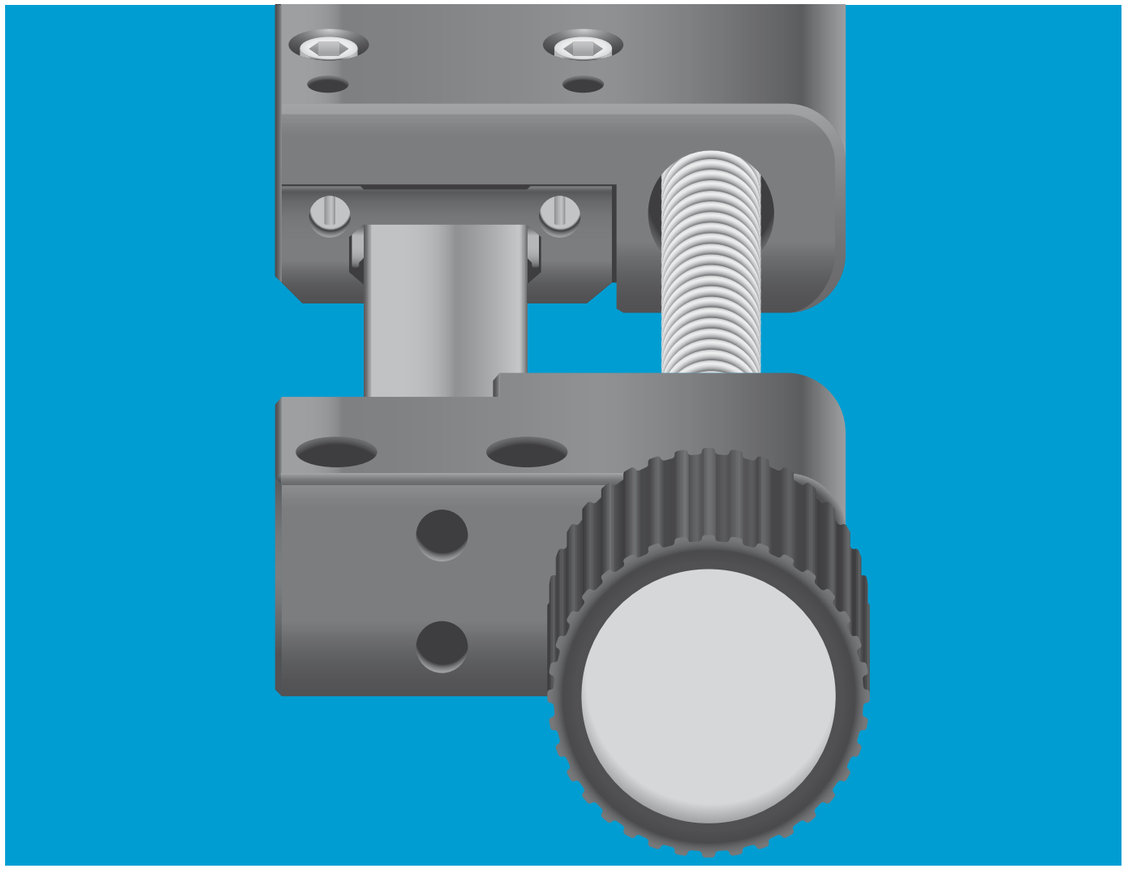

drylin® general drive technology – linear modules SLT

- Based on lubrication-free drylin® T miniature guide system
- Trapezoidal or high-helix lead screw drives
- Flat and compact design
- Carriages with individually adjustable clearance
- Variable lead screw arrangement

drylin® SLT | Linear modules | Advantages

Flat, lightweight and lubrication-free

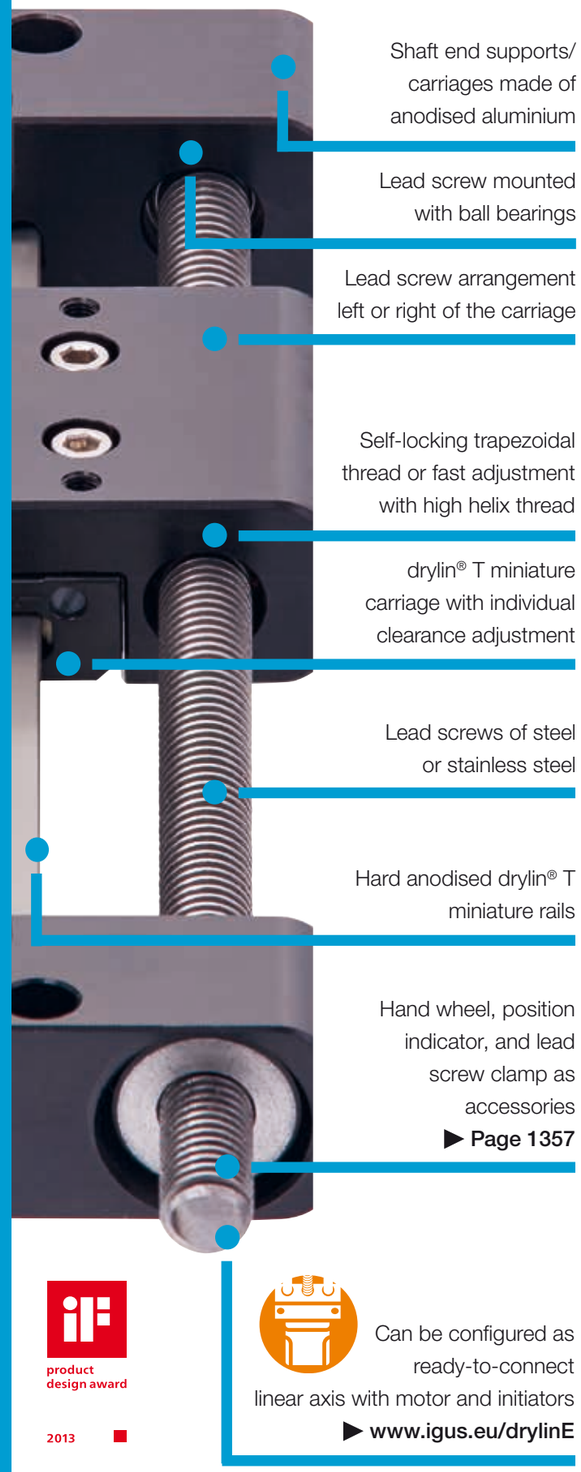

product design award 2013

Lubrication-free linear modules – drylin® SLT

An extremely flat structure, the lateral lead screw arrangement, a striking design, are just some of the reasons why the drylin® linear module SLT was honoured with the 2014 IF Award. Technically, the system is impressive with ball-bearing supported trapezoidal thread or high helix thread lead screws for motorised or manual operation. The basis of the SLT series is the drylin® T low profile linear guide system in sizes 12 and 15.

- Low profile structure through lateral lead screw arrangement
- Lubrication-free, corrosion-resistant, lightweight
- Variable pitch
- Adjustable drylin® T miniature carriage
- Lead screw arrangement can be selected either left or right

Typical application areas

- Format adjustments
- Laboratory and medical technology
- Optical equipment

Available in 3-8 days
Detailed information about delivery time online.

Max. +60 °C
Min. -40 °C

Stroke lengths 300 mm – 600 mm
More dimensions on request.

Product finder
▶ www.igus.eu/slt-productfinder

RoHS-II

In accordance with EC Directive 2011/65/EU (RoHS-II) Restriction (of the use of certain) hazardous substances

drylin® SLT | Linear modules | Product range

With ball bearing lead screw supports

Order key

SLT-BB-0412-ER-S0015RG-xxx

- **Stroke length in mm**
- **Lead screw end**
  - **G:** Threaded end
- **Thread**
  - **R:** Right
- **Pitch**
- **Lead screw:**
  - Steel or stainless steel
- **Alignment lead screw**
  - **R:** Right (standard)
  - **L:** Left
- **Adjustable carriage TWE**
- **Installation size**
- **Design**
  - **BB:** With ball bearings
- **Type**

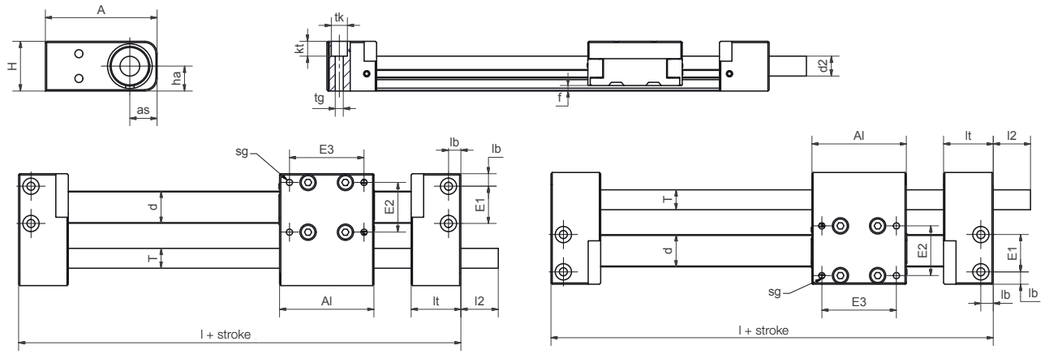

Lead screw alignment left

Spindle alignment right

Technical data and dimensions [mm]

Part No.	Lead	Max. stroke length	Weight		Max. static load capacity		Max. RPM	Max. speed
			Additional (per 100 mm)		Axial	Radial		
			[kg]	[kg]	[N]	[N]	[1/min]	[m/min]
SLT-BB-0412	Tr08x1.5	300	0.15	0.06	100	200	1,000	1.5
	Sg08x15	300	0.15	0.06	25	100	600	9.0
SLT-BB-0415	Tr12x3	600	0.40	0.12	200	400	1,000	4.5
	Tr12x6	600	0.40	0.12	100	400	750	4.5
	Sg12x25	600	0.40	0.12	50	200	300	7.5

Part No.	A	Al	H	E1	E2	E3	l	l2	d2	ha	sg	tk	kt	tg	f	lb	lt	d	T	as
SLT-BB-0412	45	38	20	15	20	30	78	15	-	10	M3-7	6.5	6	M4	2.2	5	20	13	Tr08x1.5	11
SLT-BB-0415	58	45	30	19	25	35	89	17	12	15	M3-13	8	4.5	M5-15	2.8	6.5	22	17	Tr12x3	16

My sketches

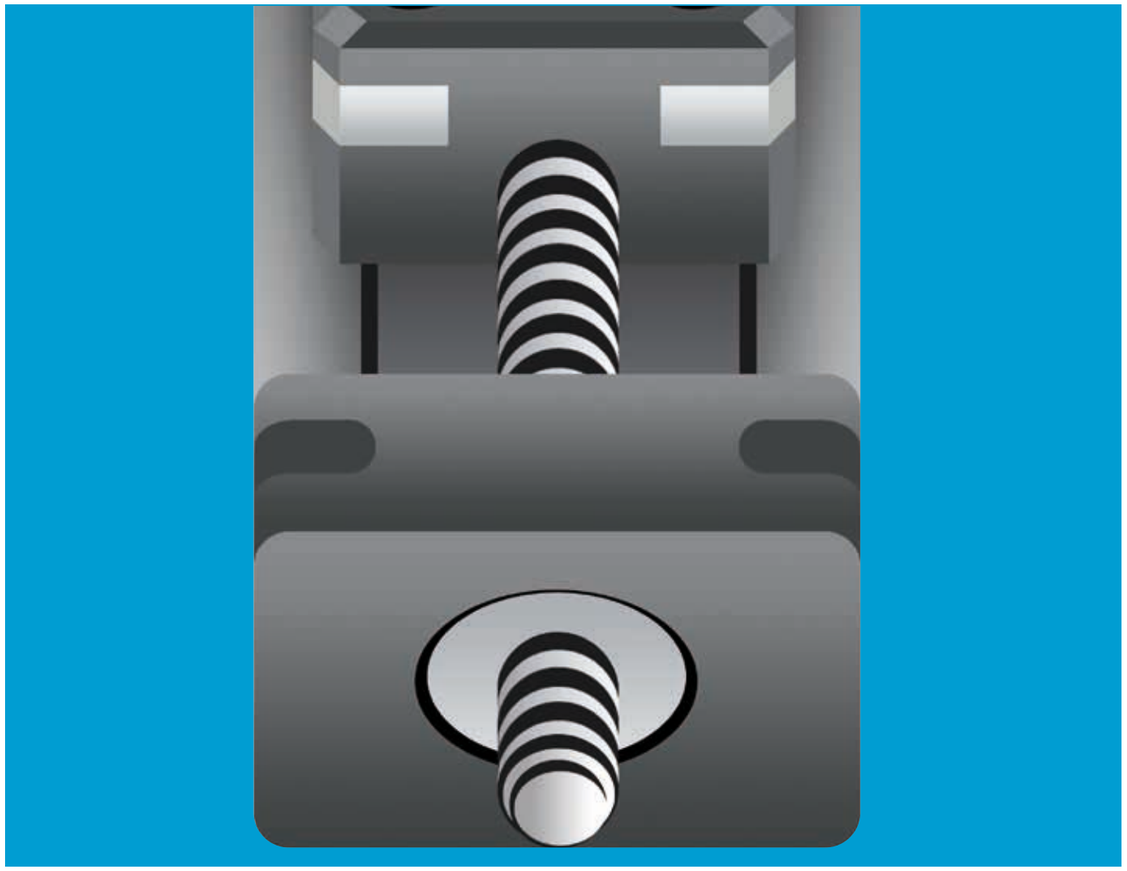

drylin® general drive technology – linear modules SLN

- Based on lubrication-free drylin® N low profile guide
- Trapezoidal or high-helix lead screw drives
- Compact design
- Cost-effective
- Dynamic due to lead screw drive with ball-bearing

Compact, precise and lubrication-free

Support blocks from corrosion resistant, robust plastic

Lead screw mounted with plain or ball bearings

Cost-effective, robust plastic carriages (basic series 03)

Carriage with manual height clearance adjustment (standard series 04)

Metal thread inserts

Minimal backlash with preloaded nut (preload series 05)

Rail made from anodised aluminium

Lead screws made from stainless steel with pitch M5 (5x0.8 mm) or high helix thread (5x5, 6x12.7)

Available hand wheels ▶ **Page 1364**

Configurable with motor as a ready to install linear drive (drylin® E ▶ **Page 1311**)

Lubrication-free miniature linear modules – drylin® SLN

drylin® SLN linear axes provide a solution for compact installation spaces. The axis measures 28 x 22 mm and can be configured with stroke lengths of up to 250 mm. Thanks to the plastic glides, it runs extremely quietly and is also very light. The axis is based on the tried-and-tested drylin® N system, size 27. It is available both mounted on plain bearings or with ball bearings in the shaft end supports. The drylin® SLN linear axis can be adjusted manually using the hand wheel or combined with the drylin® E stepper and DC motors.

- Ultra-compact design
- 3 carriage types (basic/adjustable/preload)
- Lubrication-free drylin® low profile guide
- Modular design

Typical application areas

- Sensors
- Inspection equipment
- Laboratory technology
- Medical technology

Available in 3-8 days
Detailed information about delivery time online.

Block pricing online
No minimum order value. From batch size 1.

Length of carriage: 35 mm
Stroke lengths: up to 250 mm

Product finder
▶ www.igus.eu/sln-productfinder

Miniature linear module, Basic version

- Single parts made from aluminium and plastic
- Entry-level model
- Lead screw mounted with plain bearings
- Retrofitting possible
- Available accessories
  ▶ **Page 1357**
- Available with motor
  ▶ **Page 1311**

Order key

SLN-27-03-0008

- **Pitch**
- **Carriage version**
  - **03:** Basic
- **Dimension**
- **Standard**

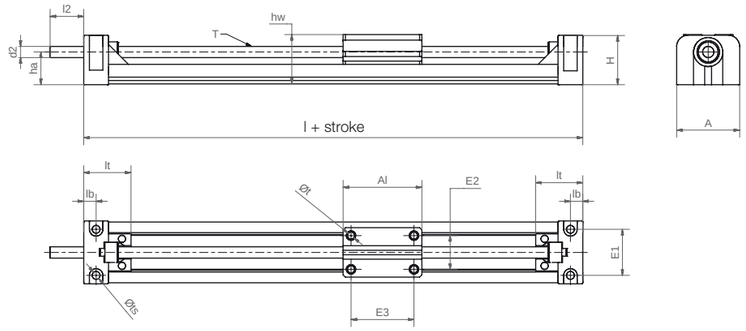

Technical data

Part No.	Max. stroke length [mm]	Weight [kg]	Additional [kg] (per 100 mm)	Max. stat. load capacity Axial [N]	Max. stat. load capacity Radial [N]	Max. speed [U/min]	Max. drive torque [Nm]
SLN-27-03-0008	250	0.5	0.40	10	40	100	0.10
SLN-27-03-0025	250	0.5	0.40	10	40	100	0.15
SLN-27-03-0051	250	0.5	0.40	10	40	100	0.20
SLN-27-03-0127	250	0.5	0.40	10	40	100	0.30
SLN-27-03-0254	250	0.5	0.40	10	40	100	0.40

Dimensions [mm]

Part No.	A ±0.2	Al -0.1	H ±0.2	E1 ±0.15	E2 ±0.15	E3 ±0.15	E11[102]	l	hw ±0.2	lt ±0.2	lb	ts	t	T	d2[98]	l2	ha
SLN-27-03-0008	28	35	22	20.5	15	28	15	77	22	21	5.5	3.5	3.2	M5	4	15	14.5
SLN-27-03-0025	28	35	22	20.5	15	28	15	77	22	21	5.5	3.5	3.2	6.35x2.54	5	15	14.5
SLN-27-03-0051	28	35	22	20.5	15	28	15	77	22	21	5.5	3.5	3.2	6.35x5.07	5	15	14.5
SLN-27-03-0127	28	35	22	20.5	15	28	15	77	22	21	5.5	3.5	3.2	6.35x12.7	5	15	14.5
SLN-27-03-0254	28	35	22	20.5	15	28	15	77	22	21	5.5	3.5	3.2	6.35x25.4	5	15	14.5

[102] The dimension E11 can only be found in conjunction with the igus® motor connection

[98] Thread/remaining thread visible

With manual clamp (optional): Part No. SLN-27-HK-...

drylin® SLN | Miniature linear modules | Product range

Miniature linear module, preload version

- Based on maintenance-free drylin® N low profile guides size 27
- BB-version (ball bearing) for low backlash run
- Manual and motorised operation possible
- Linear carriage with individual height clearance adjustment and optional preload
- Available accessories
  ▶ **Page 1357**
- Available with motor
  ▶ **Page 1311**

Order key

SLN-27-14-0008

Pitch
0008: M5x0.8
0050: SG5x5
0025: DS6.35x2.54
0127: SG6.35x12.7
0254: DS6.35x25.4
Carriage version
4: Standard, adjustable
5: Standard, preload
Shaft end support type
0: Plain bearing
1: Ball bearing
drylin® N size 27
Linear module

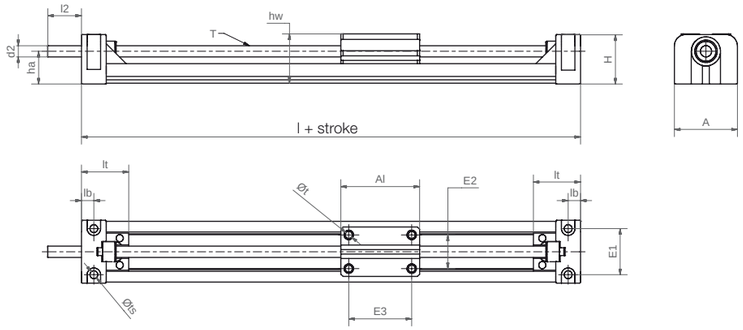

Technical data

Part No.	Max. stroke length [101] [mm]	Weight [kg]	Additional [kg] (per 100 mm)	Max. stat. load capacity Axial [N]	Radial [N]	Max. speed [U/min]	Max. drive torque [Nm]
SLN-27-04	250	0.06	0.04	10	40	100	0.1
SLN-27-14	250	0.06	0.04	10	40	300	0.1
SLN-27-05	250	0.06	0.04	10	40	100	0.1
SLN-27-15	250	0.06	0.04	10	40	300	0.1

Dimensions [mm]

Part No.	A ±0.2	Al -0.1	H ±0.2	E1 ±0.15	E2 ±0.15	E3 ±0.15	E11 [102]	l	hw ±0.2	lt ±0.2	lb	ts	tg	d2 [98] Ø	l2	ha
SLN-27-04	28	35	21.5	15	15	28	15	77	22	20.2	5	3.5	M3	5	15	14
SLN-27-14	28	35	21.5	15	15	28	15	77	22	20.2	5	3.5	M3	Ø4h9 [98]	15	14
SLN-27-05	28	35	21.5	15	15	28	15	77	22	20.2	5	3.5	M3	5	15	14
SLN-27-15	28	35	21.5	15	15	28	15	77	22	20.2	5	3.5	M3	Ø4h9 [98]	15	14

[101] Fixed stroke lengths for SLN option: 100/150/200/250 mm [102] The dimension E11 can only be found in conjunction with the igus® motor connection [98] Thread/ remaining thread visible

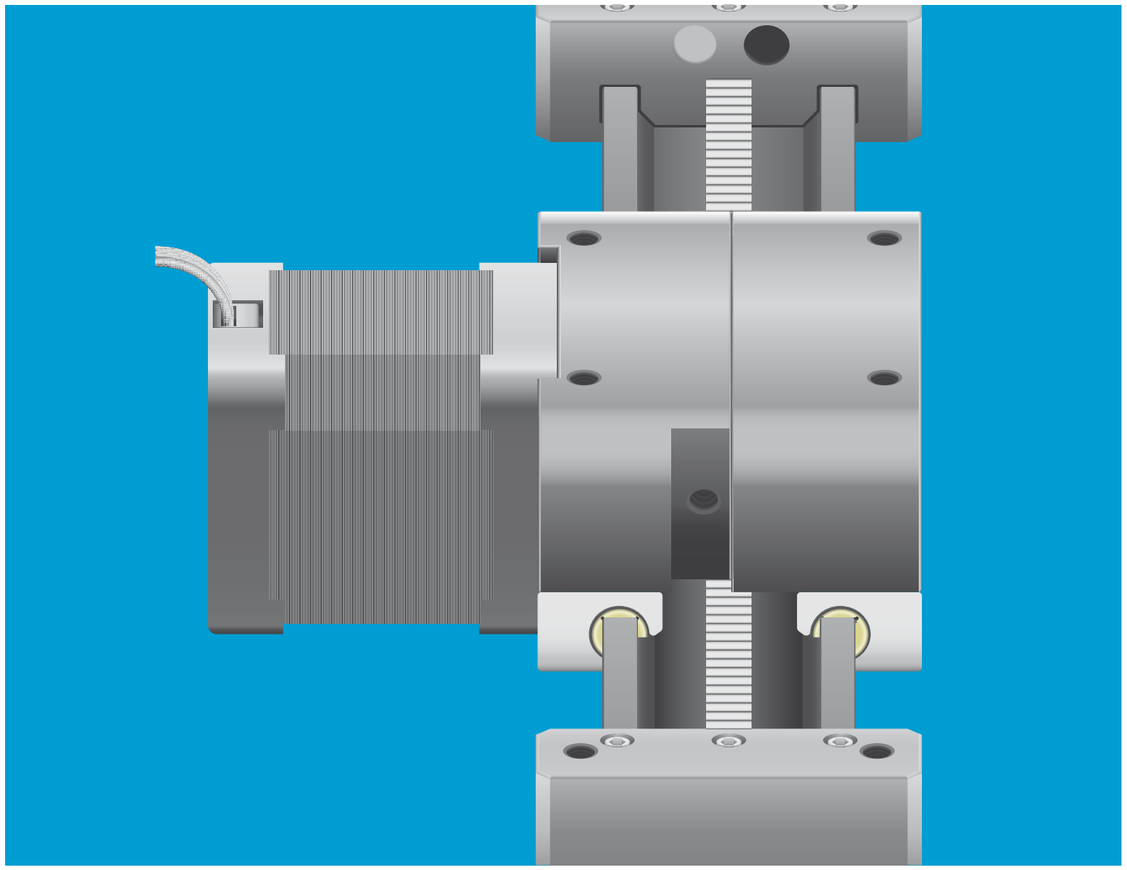

drylin® general drive technology – cantilever axis

Dynamic

Rack and pinion drive

Light and compact

Ideal as z axis in linear robots

Lubrication and maintenance-free

drylin® cantilever axis | Advantages

Small and dynamic

Lubrication-free cantilever axis

The drylin® GRW cantilever axis was specifically designed for pick & place applications.
Due to the direct rack drive, the GRW axis provides high dynamics for small loads and is the ideal z axis in multi-axis portals.

- Dynamic force transmission through rack
- For loads up to 1 kg
- Completely lubrication-free operation
- Assembly option for limit and reference switch

Typical application areas

- Multi-axis linear robots
- Test and measuring equipment
- Pick & place applications

Available in 3-8 days
Detailed information about delivery time online.

Block pricing online
No minimum order value. From batch size 1.

Stroke lengths up to 300 mm

drylin® cantilever axis | Product overview

Direct drive via rack

drylin® GRW cantilever axis

- Direct dynamic force transfer via rack
- Stroke lengths up to 300 mm
- Ideal as z axis in multi-axis linear robots

▶ Page 1290

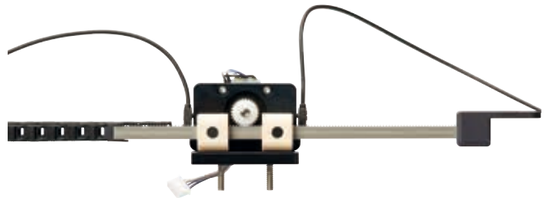

drylin® GRQ gripper axis

- Drive via toothed hollow square profile section
- Very light and compact design
- Loads up to 500 g with a speed up to 0.7 m/s

▶ Page 1291

drylin® GRW axis in the line linear robot

- GRW as z axis in the line linear robot DLE-LG-001
- Ready-to-fit with NEMA17 stepper motors
- Linear robot systems available from stock

▶ Page 1344

drylin® GRQ in lift/swivel unit

- drylin® GRQ in lift/swivel unit drylin® HSQ
- Compact unit for lifting and swivelling tasks
- Ready to install with NEMA stepper motors

▶ Page 1292

drylin® GRW | Cantilever axis | Product range

Dynamic z axis for linear robot structures

- Direct force transfer via rack
- Compact structure
- For loads up to 10 N
- Available accessories ▶ **Page 1357**
- Available with motor ▶ **Page 1311**

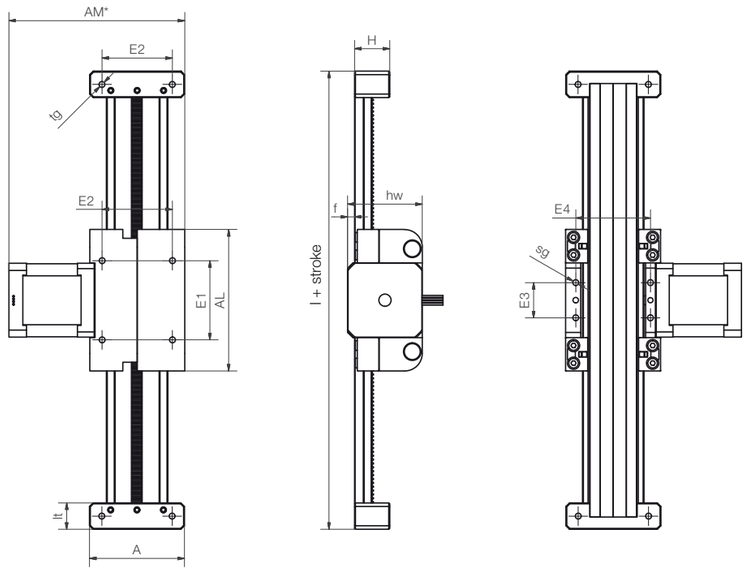

Technical data

Part No.	Stroke length [mm]	Weight [kg]	Additional (per 100 mm)	Max. feed rate [mm/rev]	Max. load axial [N]
GRW-0630-A	150	0.5	0.1	44	10
GRW-0630-B	300	0.5	0.1	44	10

Dimensions [mm]

Part No.	A -0.3	Al	H	E1 +0.15	E2 +0.15	E3	E4	l	lt	hw	f	AM [131]	tg	sg
GRW-0630-A	54	80.5	20	45	40	20	42.5	110.5	15	42.5	4	100.0	M4	M4-8
GRW-0630-B	54	80.5	20	45	40	20	42.5	110.5	15	42.5	4	121.4	M4	M4-8

[131] Depending on the type of motor

drylin® GRQ | Gripper axis | Product range

Extremely light axis for pick & plate

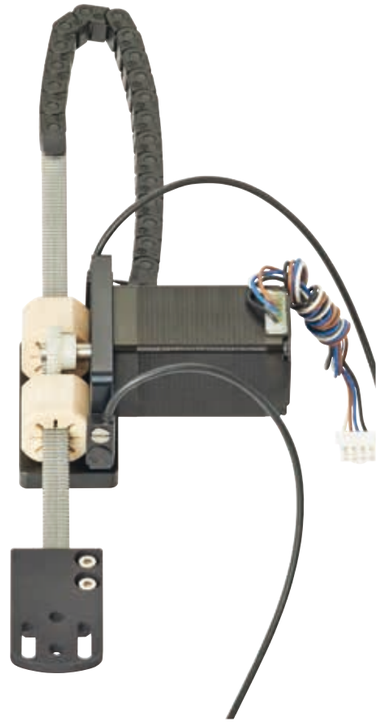

- Toothed, hard anodised and corrosion resistant square hollow section
- Loads up to 500 g with a speed up to 0.7 m/s
- iglidur® J plain bearings
- Drive: NEMA11 stepper motor with gear wheel

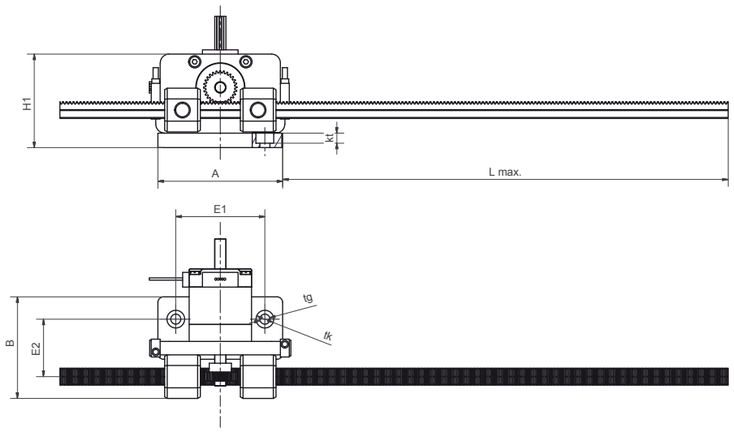

Dimensions [mm]

Part No.	F [N]	v [m/s]	L max	A	H1	E1	E2	B	tg	tk	kt	B	Q	D2
GRQ-10-A-56-120-11-L-01-000	5	0.7	200	56	42	40	26	46	4.5	8	4.5	52	7.5	22

drylin® HSQ | pivoting/lifting unit | Product range

Compact, modular and lubrication-free

- Toothed, hard anodised, corrosion resistant square hollow section
- Combination with iglidur® J slewing ring element
- Modular design
- Drive: NEMA11 stepper motor

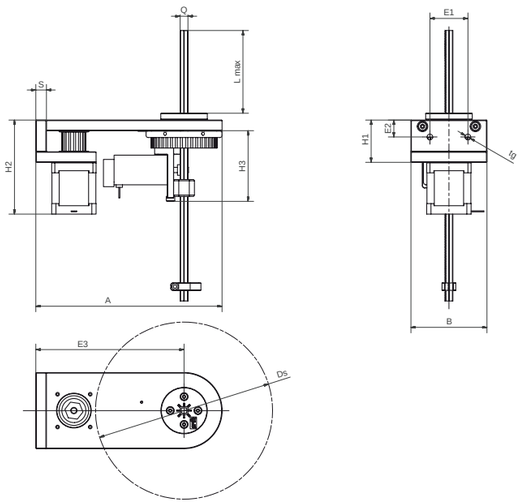

Further motors on request/suitable initiators available

Dimensions [mm]

Part No.	F [g]	vL	vR	Lmax. ±0.15	(Ds) ±0.15	A	B ±0.15	H1	(H2) ±0.3	(H3)	E1	E2	E3	Q	tg h9	S
HSQ-10-1440-…	300	0.5	0.4	200	168	177	72	40	89	67	36	16	140	7.5	5.3	10

Order example:
HSQ-10-1440-A-xxx-17-L-11-L
(incl. stepper motor NEMA 17/11 with stranded wire)
HSQ-10-1440-A-xxx-17-E-11-E
(incl. stepper motor NEMA 17/11 with encoder)

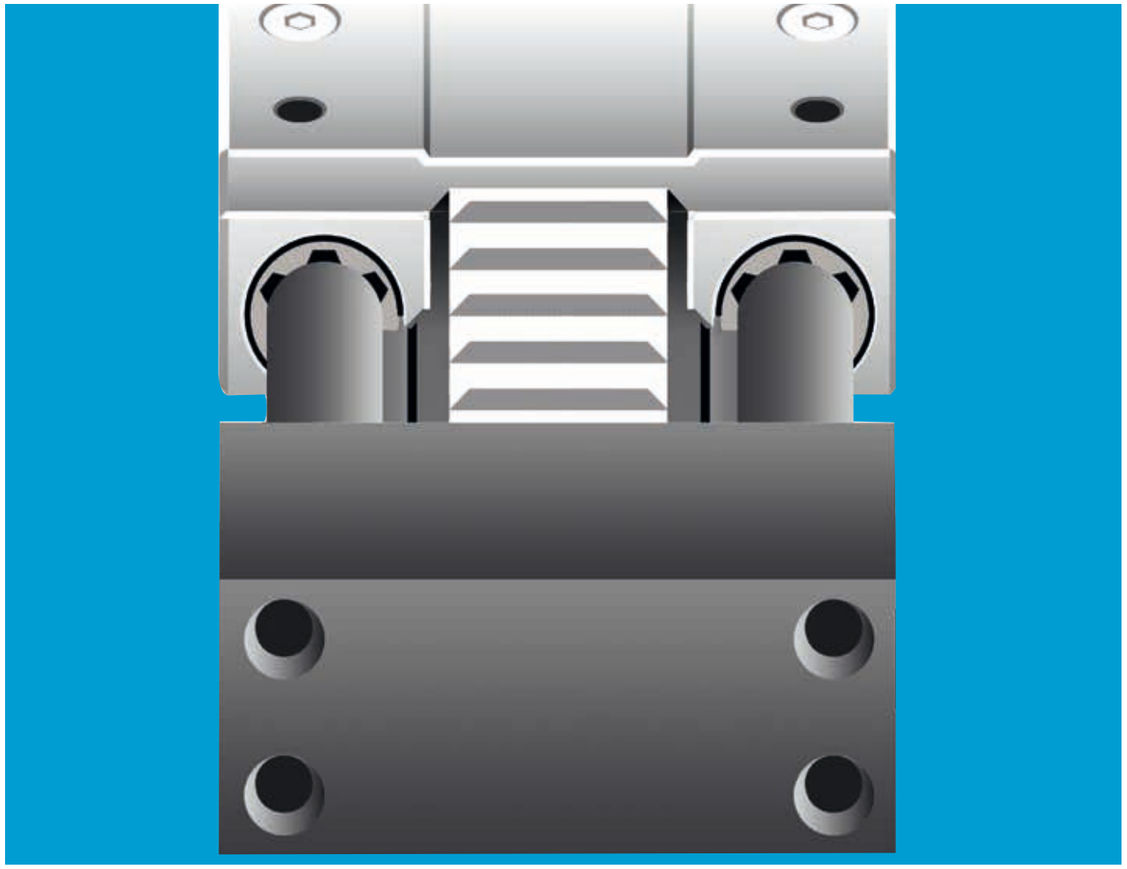

drylin® general drive technology – tooth belt axis ZLW

Lubrication-free linear modules based on drylin® W guides

Drive: toothed belt

For fast positioning

Deflection with grooved ball bearings

As single axis or for multi-axis linear robots

Fast and powerful

Lubrication-free toothed belt axes – drylin® ZLW

The drylin® toothed belt axes in the ZLW series are suitable for many different positioning and adjustment tasks. The lubrication-free drylin® W profile guide acts as a linear guide and a toothed belt acts as a drive. The stroke is individually selectable. Thanks to the lightweight design using plastic and aluminium, drylin® ZLW toothed belt axes have a low mass inertia, making them highly efficient. Whether as an individual system or a linear robot structure, the ZLW series offers the ideal solution in both confined spaces and applications that require a high level of torque support . All drylin® ZLW toothed belt axes can be ordered ready for connection and configured with drylin® E stepper and DC motors. It is also possible to integrate other motor components.

- Completely lubrication-free operation
- 3 types: Eco/basic/standard
- Variable carriage lengths
- Multiple motor kits available

Typical application areas

- Medical and laboratory technology
- Handling
- Positioning tasks (pick & place)
- Camera/sensor adjustment
- Machine construction

Available in 3-8 days
Detailed information about delivery time online.

Block pricing online
No minimum order value. From batch size 1.

Carriage lengths: 60-250 mm
Carriage widths: 54-107 mm
Stroke lengths: up to 3,000 mm

Product finder
▶ **www.igus.eu/zlw-productfinder**

Positioning with lubrication-free toothed belt drive

ZLW series Eco

- Low-cost starter axis in 2 sizes
- Lightweight
- Carriage and deflection housing made of plastic
- Anodised drylin® W aluminium profile section

▶ **Page 1302**

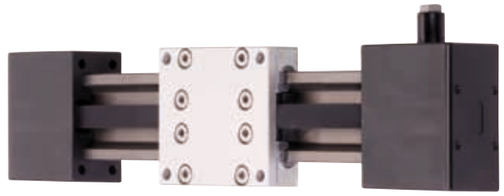

ZLW series Basic

- Cost-effective deflection axis consisting of stainless-steel square section and high-performance polymer
- Neoprene toothed belts with fibre glass reinforcement
- Hard anodised drylin® W aluminium profile
- For installation sizes 0630 and 1040

▶ **Page 1302**

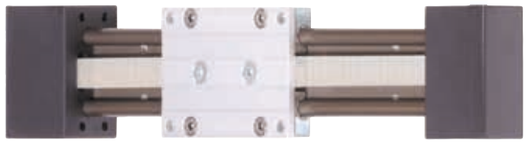

ZLW series Standard

- Effective PU toothed belt with steel coatings
- Single-section deflection axis made of stainless steel (shaft and tooth rim)
- Hard anodised drylin® W aluminium profile
- For installation sizes 0630/1040/1080/1660

▶ **Page 1302**

ZLW specialists

- Deep-freeze LT version for applications down to -30 °C
- UW version for under water use
- SW version for splash water applications
- For installation size 1040

▶ **Page 1302**

ZLW-OD opposite

- For quick reverse positioning
- Fast right/left adjustment
- Compact due to flat drylin® W double rails
- With angle flange

▶ **Page 1304**

ZAW – Cantilever axis

- Secure mounting of the drive unit
- Traversing of profile section and load
- Fixed end block and floating shaft end support
- Size 1040 for max. stroke up to 1,000 mm

▶ **Page 1306**

ZLW – open design in installation size 20

- Variable shaft span of 120/160/200 mm
- Effective deflection axis and toothed belt
- Low weight aluminium version available
- Corrosion-resistant stainless steel version available

▶ **Page 1308**

Motors and mounting accessories

▶ **Page 1311**

drylin® ZLW | Toothed belt axes | Technical data

Belt drive axis	Type	Shafts-Ø	Weight		Max. stroke length [120]	Transmission	Tooth profile	Carriage length	Max. radial load	Toothed belt material	Toothed belt width	Toothed belt tension	Guide bearing	Max. speed	Max. position variation	Idle torque	Max. drive torque
			without stroke	100 mm stroke													
ZLW-0630-...		[mm]	[kg]	[kg]	[mm]	[mm/U]		[mm]	[N]		[mm]	[N]		[m/s]	[mm]	[Nm]	[Nm]
...-02-E	ECO	□5	0.30	0.08	500	54	HTD 3M	60	30	Neoprene with GF	9	20	Ball bearing	1.0	± 0.40	0.10	0.30
...-02-B	basic	□5	0.38	0.08	1,000	54	HTD 3M	60/100	100	Neoprene with GF	9	75	Ball bearing	2.0	± 0.35	0.10	0.75
...-02-S	Standard	□5	0.43	0.08	1,000	54	MTD3	60/100	150	PU with steel	9	100	Ball bearing	2.0	± 0.30	0.15	1.00
...-OD-B	Reverse Basic	□5	0.40	0.1	1,000	54	HTD 3M	60/100	50	Neoprene with GF	9	75	Ball bearing	1.0	± 0.35	0.10	0.75
...-OD-S	Reverse Standard	□5	0.45	0.1	1,000	54	HTD 3M	60/100	75	PU with steel	9	100	Ball bearing	1.0	± 0.30	0.15	1.00
ZLW-1040-...																	
...-02-E	ECO	10	0.70	0.14	1,000	66	RPP 3M	100/150/200	100	Neoprene with GF	15	50	Ball bearing	2.0	± 0.35	0.1	0.5
...-02-B	basic	10	0.90	0.14	2,000	66	RPP 3M	100/150/200	200	Neoprene with GF	16	150	Ball bearing	3.0	± 0.30	0.2	1.75
...-02-S	Standard	10	1.00	0.14	2,000	70	AT5	100/150/200	300	PU with steel	16	200	Ball bearing	5.0	± 0.20	0.3	2.40
...-02-LT	Deep-freeze	10	1.00	0.14	2,000	70	AT5	100/150/200	300	TPUKF2	16	200	Cold ball bearing	5.0	± 0.20	0.3	2.40
...-02-UW	Underwater	10	1.00	0.14	1,000	70	AT5	100/150/200	100	PU + Aramid	16	50	xiros® ball bearing	1.0	± 0.50	0.15	0.50
...-02-SW	Splash water	10	1.00	0.14	2,000	70	AT5	100/150/200	200	PU + Stainless steel	16	200	Stainless steel ball bearing	5.0	± 0.20	0.30	2.40
...-OD-B	Reverse Basic	10	1.00	0.17	1,500	66	RPP 3M	100/150/200	100	Neoprene with GF	16	150	Ball bearing	1.5	± 0.30	0.15	1.75
...-OD-S	Reverse Standard	10	1.00	0.17	1,500	70	AT5	100/150/200	150	PU with steel	16	200	Ball bearing	2.5	± 0.20	0.25	2.40
ZLW-1080-...																	
...-02-S	Standard	10	1.30	0.14	2,000	70	AT5	100/150/200	300	PU with steel	16	200	Ball bearing	5	± 0.20	0.25	2.40
ZLW-1660-...																	
...-02-S	Standard	16	4.00	0.5	3,000	120	AT5	100/150/200/250	2000	PU with steel	32	500	Ball bearing	5	± 0.20	0.4	10.00

Tightening torque for drylin® connections between metal parts

Metric thread (Da)	Torque [Nm]	Recommended torque [Nm]
M3	0.5 - 1.1	0.7
M4	1.0 - 2.8	1.5
M5	2.0 - 5.5	3.0
M6	4.0 - 10.0	6.0
M8	8.0 - 23.0	15.0
M10	22.0 - 46.0	30.0

Please be aware of the minimal screw in depth for aluminium and zinc parts: 1.5 x Da

[120] When configuring your linear module, we ask that you note the igus® specifications for maximum stroke lengths. The performance and load specifications shown above for all drive units are based exclusively on stroke lengths within the recommended values. Exceeding these can result in undesirable effects to the function such as increased wear and noise. Belt or lead screw contact cannot be excluded, and the rated performance and load specifications may not be attainable.

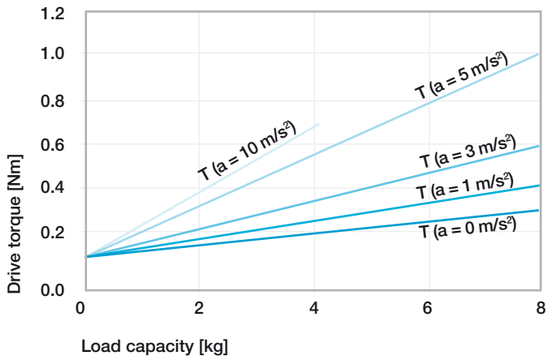

Diagram 01: Required drive torque [138]; horizontal orientation – ZLW-0630, Version basic 02

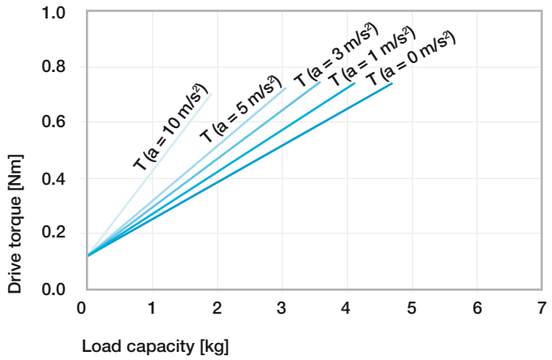

Diagram 02: Required drive torque[138]; vertical orientation – ZLW-0630, Version basic 02

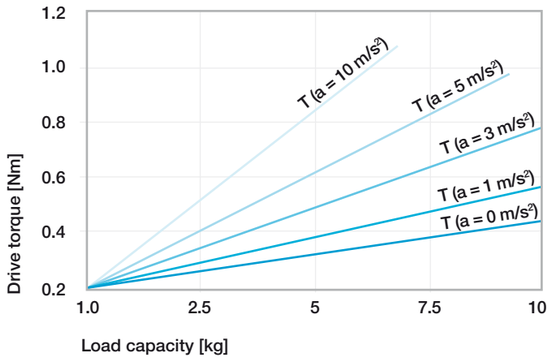

Diagram 03: Required drive torque[138]; horizontal orientation – ZLW-0630, Version standard 02

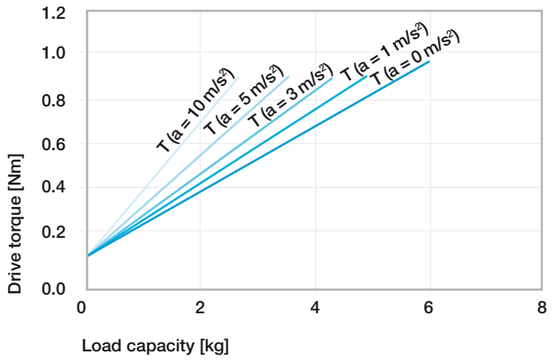

Diagram 04: Required drive torque[138]; vertical orientation – ZLW-0630, Version standard 02

[138] Assumption: the moving mass is located in a circumscribed circle with a max. R = 100 mm to the middle of the guiding rail, max. permissible torque ZLW-0630 Basic 02: 0.75 Nm, a = 0 m/s² , ZLW-0630 Standard 02: 1 Nm, a = 0 m/s², constant drive without nominal acceleration value

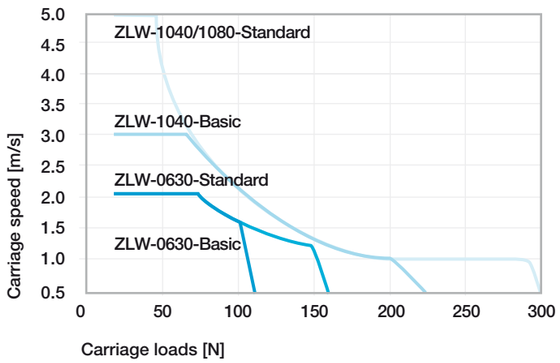

Diagram 05: Maximum load compared: ZLW-0630 and ZLW-1040/1080, 100 % OT (On-time). The diagram accounts for the sum of all forces active on the carriage.

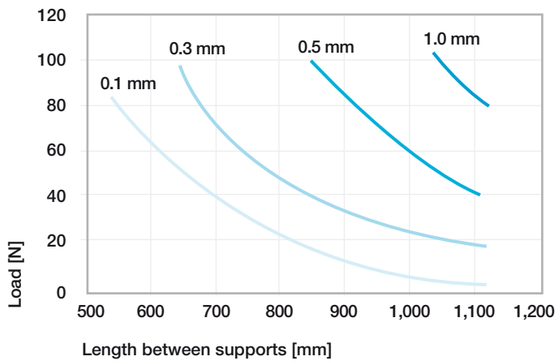

Diagram 06: Sag between unsupported end blocks ZLW-0630, Version basic 02 and standard 02. Sag permissible up to 2 mm maximum.

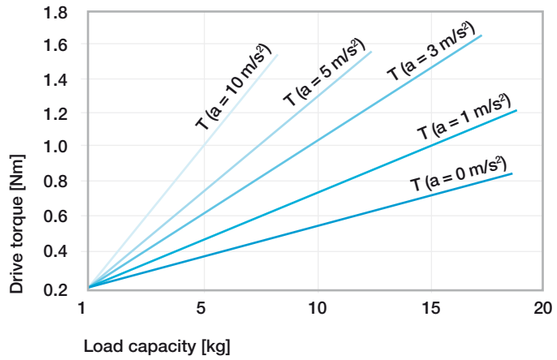

Diagram 07: Required drive torque[139]; horizontal orientation– ZLW-1040, Version basic 02

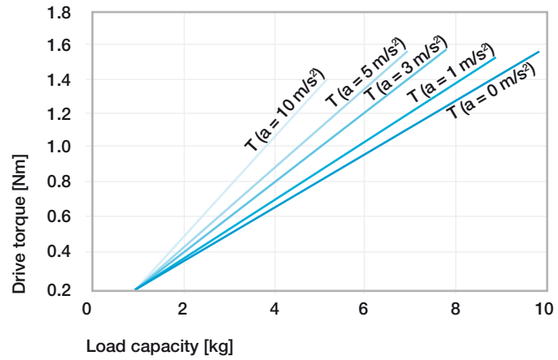

Diagram 08: Required drive torque[139]; vertical orientation – ZLW-1040, Version basic 02

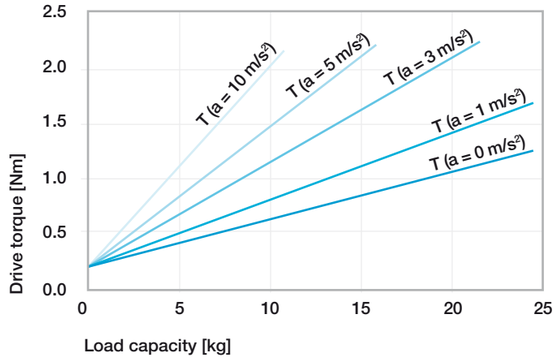

Diagram 09: Required drive torque[139]; horizontal orientation – ZLW-1040/1080, Version standard 02

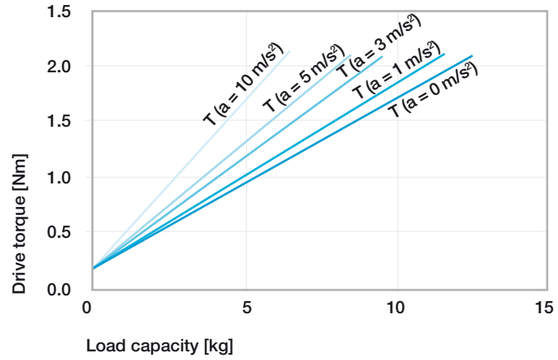

Diagram 10: Required drive torque[139]; vertical orientation – ZLW-1040/1080, Version standard 02

[139] Assumption: the moving mass is located in a circumscribed circle with a Max. R = 100 mm to the middle of the guiding rail, max. permissible torque ZLW-1040/1080 Basic 02: 1.75 Nm, a = 0 m/s² , ZLW-1040/1080 Standard 02: 2.4 Nm, a = 0 m/s², constant drive without nominal acceleration value

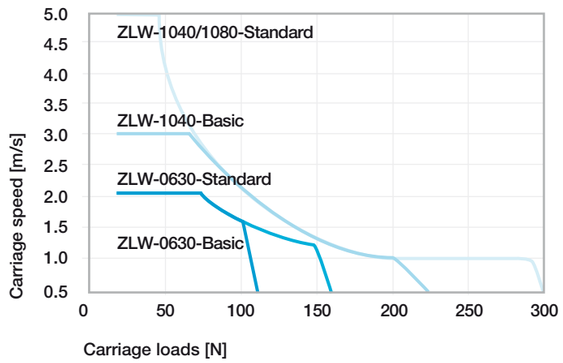

Diagram 11: Maximum load compared: ZLW-0630 and ZLW-1040/1080, 100 % OT (On-time). The diagram accounts for the sum of all forces active on the carriage.

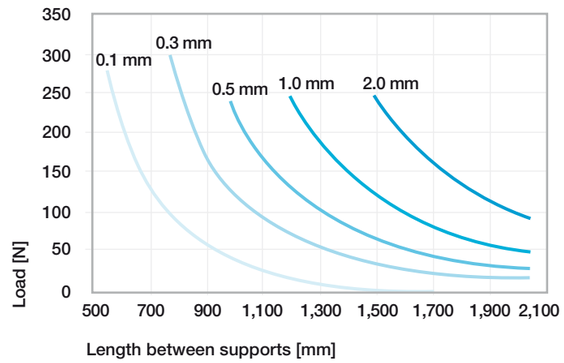

Diagram 12: Sag between unsupported end blocks ZLW-1040, Version Basic and ZLW-1040/1080 Version Standard 02. Sag permissible up to 2 mm maximum, horizontal orientation

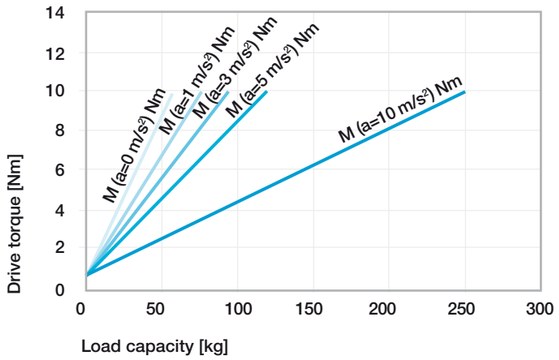

Diagram 07: Required drive torque[140] horizontal orientation – ZLW-1660, Version standard 02

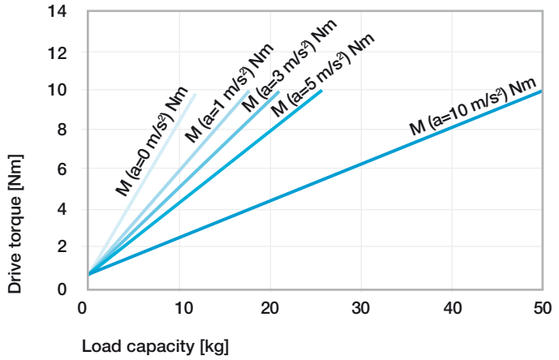

Diagram 08: Required drive torque[140] vertical orientation – ZLW-1660, Version standard 02

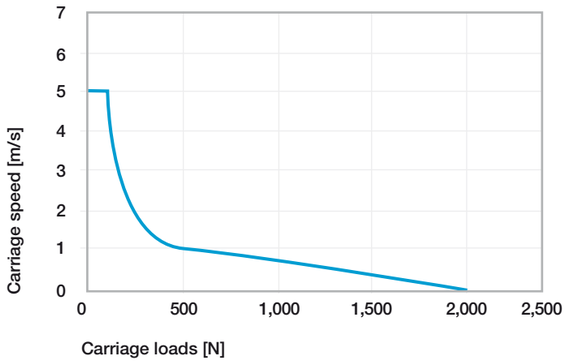

Diagram 05: Maximal load, horizontal installation; the diagram accounts for the sum of all forces active on the carriage.

[138] Assumption: the moving mass is located in a circumscribed circle with R = 100 mm to the middle of the guiding rail, max. permissible torque ZLW-1660 Standard 02: 10 Nm, a = 0 m/s², constant drive without nominal acceleration value

Technical data

Part No.	Geometrical moment of inertia		Moment of resistance	
	Iy	Iz	Wby	Wbz
ZLW-0630	30,391	11,674	1,736	845
ZLW-1040	97,560	54,910	3,902	3,076
ZLW-1080	483,653	486,613	11,515	4,684
ZLW-1660	540,876	4,773,489	14,618	24,586

Eco series

Many infeed movements require cost-effective linear axes that focus on pure adjustment tasks. This eco series with toothed belt was developed for the fast positioning of light loads. By the compact design and low weight due to aluminium and plastic, the ZLW eco is the perfect alternative to self-made solutions.

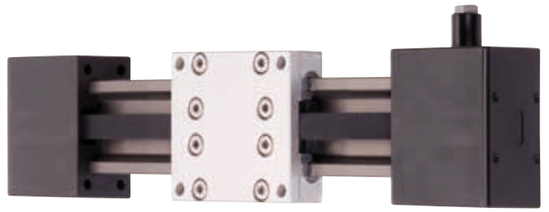

Basic series

Lubrication-free linear guide also driven by a toothed belt made from fibre glass reinforced Neoprene (black). The deflection shaft, consisting of a square stainless steel and toothed pulley made of high-performance polymer, rests on 2 grooved ball bearings. The drive pin is 6x6 mm square and made of stainless steel. The scope of supply includes a plastic adapter for a pin diameter of 10 mm.

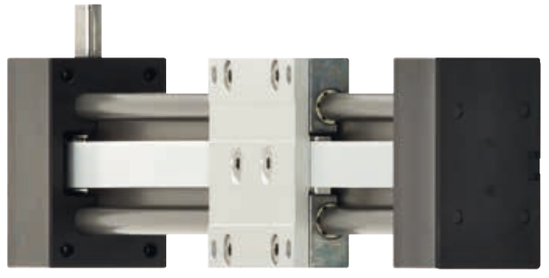

Standard series

The lubrication-free linear guide is also driven by a toothed belt made from steel reinforced polyurethane (white). Deflection shaft and drive pulley – single-piece – are made from plated steel or stainless steel. The pulley shafts are mounted in two deep grooved ball bearings.

The ZLW specialists

LT – For use at temperatures down to -30 °C, the drive and deflection shaft end supports are fitted with cold ball bearings. Drive is a toothed belt suitable for low temperatures.

SW – The "SW" ZLW version is suitable for applications where there is contact with spray water. Corrosion-resistant due to PU toothed belt with stainless steel tie beams and stainless steel ball bearings, as well as shaft-end support housing made of anodised aluminium.

UW – Maximum protection against corrosion is provided by the toothed belt axis; for underwater applications, among others. Linear carriages, drive and deflection shaft-end supports made of anodised aluminium, incl. lubrication-free xiros® ball bearings. A flexible toothed belt with aramid tie beams serves as the belt.

More Information online
www.igus.eu/ZLW

drylin® ZLW | Toothed belt axes | Product range

Toothed belt axis in versions Eco, Basic and Standard

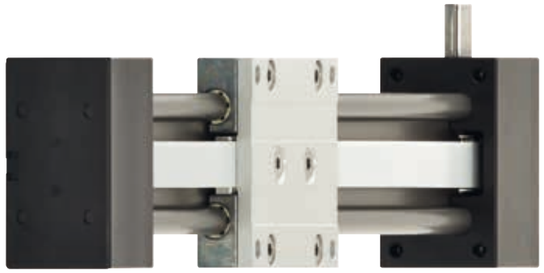

- Fast positioning of small loads
- Quiet operation and flat design
- Drive shaft on one or both sides
- Linear carriages available in different lengths (except of the Eco version)
- Configurable with motor as a ready to install linear drive ▶ **Page 1284**
- Specialist in deep-freeze, underwater and spray-water areas ▶ **Page 1251**

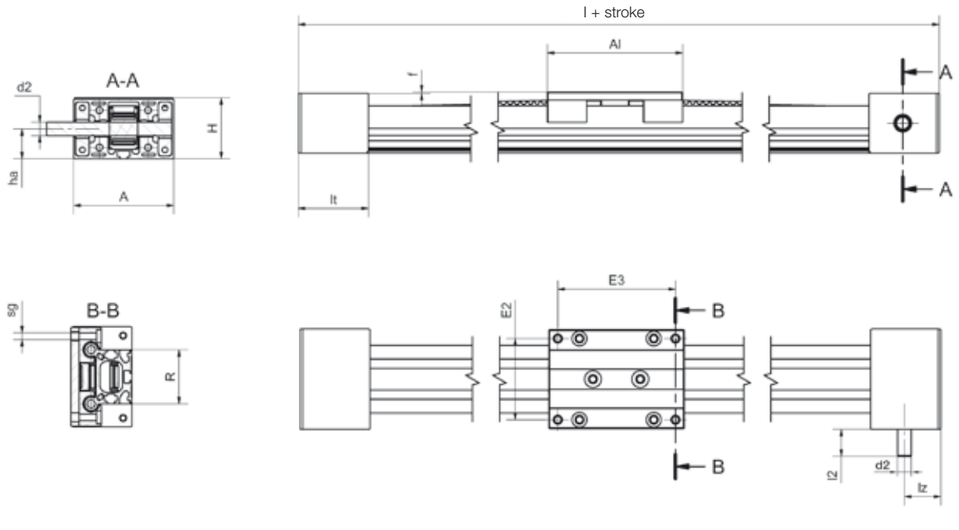

Connecting dimensions

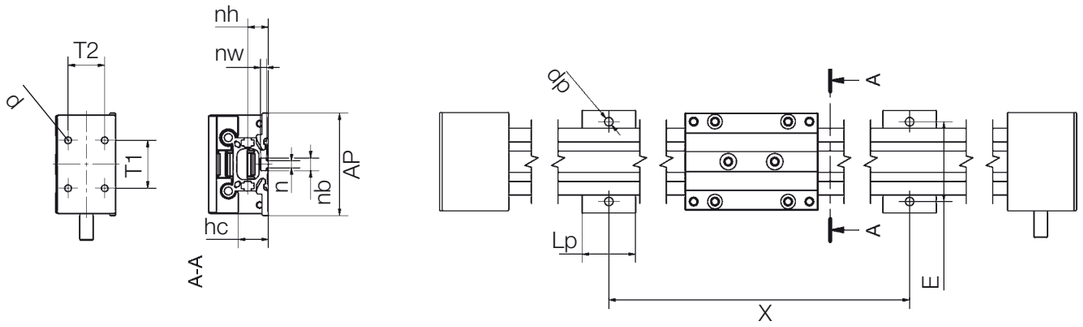

drylin® ZLW toothed belt axes

drylin® ZLW | Toothed belt axes | Product range

Order key

complete ▶ Page 1258

ZLW-0630-02-B

- **Design**
  - **E:** Type series Eco (0630/1040)
  - **B:** Type series Basic (0630/1040)
  - **S:** Type series Standard (all sizes)
- **Type**
  - **02:** With grooved ball bearings
- **Installation size**
- **Belt drive axis**

Order key specialists

ZLW-1040-LT-02-S

- **Design**
  - **S:** Design – standard
- **Type**
  - **02:** With grooved ball bearings
- **Options**
  - **LT:** For cold applications up to -30 °C
  - **UW:** For underwater applications
  - **SW:** For splash water applications
- **Type**
- **Belt drive axis**

Dimensions [mm]

Part No.	A	Al	H	E2	E3	l	R	f	lt	sg	ha	hc	lz	l2	d2
	–0.3			±0.15	±0.15		±0.15		±0.3						h9
ZLW-0630-02	54	60	31	45	51	144	30	3	42	M4	14	22.5	20	20	8
ZLW-1040-02	74	100	44	60	87	204	40	1	52	M6	22	22.5	24	20	10
ZLW-1040-LT-02-S	74	100	44	60	87	204	40	1	52	M6	22	22.5	24	20	10
ZLW-1040-UW-02-S	74	100	44	60	87	204	40	1	52	M6	22	22.5	24	20	10
ZLW-1040-SW-02-S	74	100	44	60	87	204	40	1	52	M6	22	22.5	24	20	10
ZLW-1080-02	90	100	44	94	87	204	74	1	52	M6	22	22.5	24	12	10
ZLW-1660-02	104	100	72	86	82	252	60	2	76	M8	43	22.5	38	20	14

Connecting dimensions [mm]

Part No.	X	E	AP	Lp	dp	n	nb	nw	nh	T1	T2	d
		±0.2	–1.0							±0.25	±0.25	
ZLW-0630-02	variable	40	52	15	5.5	5.2	9.5	4.3	7	20	21	3.2
ZLW-1040-02	variable	60	78	40	6.4	5.2	9.5	4.3	15.5	36	26.5	5.0
ZLW-1040-LT-02-S	variable	60	78	40	6.4	5.2	9.5	4.3	15.5	36	26.5	5.0
ZLW-1040-UW-02-S	variable	60	78	40	6.4	5.2	9.5	4.3	15.5	36	26.5	5.0
ZLW-1040-SW-02-S	variable	60	78	40	6.4	5.2	9.5	4.3	15.5	36	26.5	5.0
ZLW-1080-02	variable	94	111	40	6.4	5.2	9.5	4.36	15.5	36	27	M6
ZLW-1660-02	variable	100	122	40	9	10	15.4	13	27.6	65	60	M5

drylin® ZLW | Toothed belt axes | Product range

Opposed belt drive with angle flange

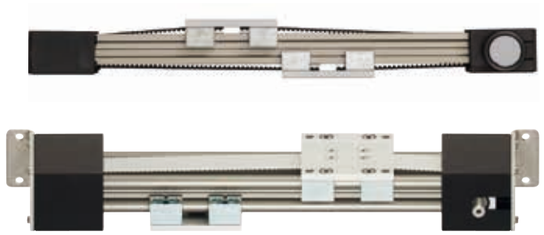

- Quick reverse positioning
- Fast right/left adjustment
- Available as standard and basic versions
- Incl. angle flange for fixing
- Individual stroke lengths up to max. 3,000 mm
- Radial loads up to 200 N

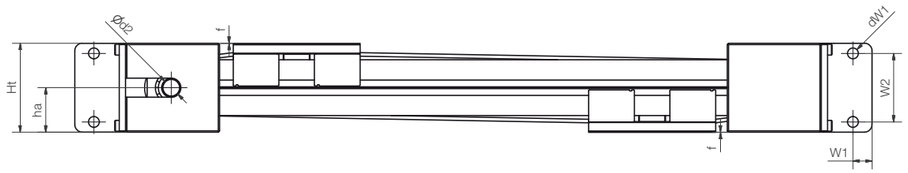

Angle flange alignment

Option 02
mounted on the side, ZLW alignment on the edge

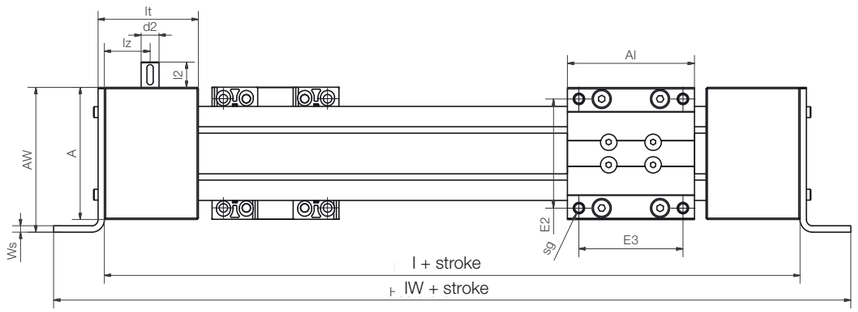

Option 04
mounted horizontally, ZLW alignment horizontal

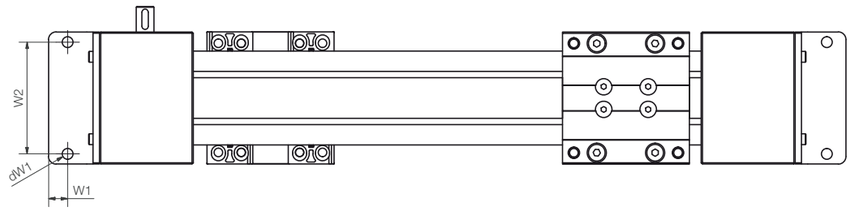

Option 03
mounted on the front

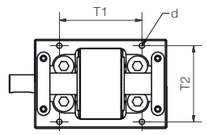

drylin® ZLW toothed belt axes

drylin® ZLW | Toothed belt axes | Product range

Order key
complete ▶ Page 1258

ZLW-1040-OD-02

- **Type**
  - **02:** With grooved ball bearings
- **Design**
  - **OD:** Right/left and reverse
- **Type**
- **Belt drive axis**

Dimensions [mm]

Part No.	A	Al	H	Ht	E2	E3	L	R	f	lt	sg	ha	lz	Max. stroke length
	–0.3				±0.15	±0.15		±0.15		±0.3				[mm]
ZLW-0630-OD [109)]	54	60	31	28	45	51	144	30	3	42	M4	14	20	1,000
ZLW-1040-OD	74	100	45	44	60	87	204	40	1	52	M6	22	24	1,500
ZLW-1660-OD-02	104	100	70	70	86	82	248	58	0	79	M8	35	36	3,000
ZLW-1660-OD-03	104	100	70	70	86	82	248	58	0	79	M8	35	36	3,000
ZLW-1660-OD-04	104	100	70	70	86	82	248	58	0	74	M8	35	36	3,000

Part No.	l2	d2	d	T1	T2	Ws	W1	W2	dw1	lW	AW
		h9		±0.25	±0.25						
ZLW-0630-OD [109)]	20	8	4	20	21	2	20	2	5.5	260	60
ZLW-1040-OD	20	10	5	36	26.5	3	25	3	6.6	296	80
ZLW-1660-OD-02	20	14	M5-10 deep	65	60	5	15	54	8.5	328	114
ZLW-1660-OD-03	20	14	M5-10 deep	65	60	5	15	88	8.5	328	75
ZLW-1660-OD-04	20	14	M5-10 deep	65	60	5	–	–	–	248	70

[109)] **Basic version: 6 mm square, plastic adapter for pin diameter 10 mm included**

drylin® ZLW | Toothed belt axes | Product range

Cantilever axis

- Drive unit fixed, only profile and load are moved
- Hard-anodised aluminium axis profile
- Lightweight
- Max. stroke 1,000 mm
- Max. axial load 50 N
- Allowed moment for carriage $M_{y\,max}$: 15 Nm

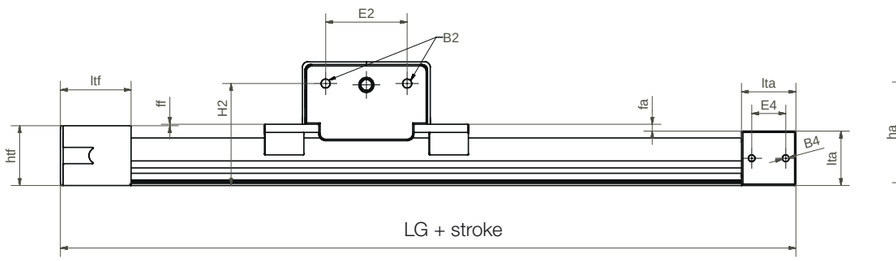

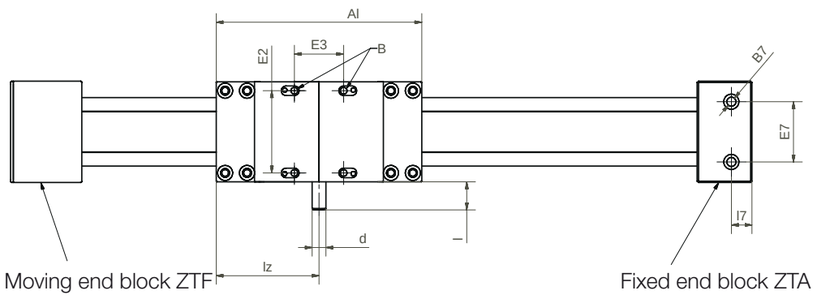

drylin® ZLW toothed belt axes

drylin® ZLW | Toothed belt axes | Product range

Order key

complete ▶ Page 1258

ZAW-1040-02-S-150-L-500

- **Stroke length**
  max. 1,000 mm
- **Drive shaft**
  L: Drive shaft left
  R: Drive shaft right
  L/R: Drive shaft both sides
- **Carriage length**
  150: 150 mm
- **Design**
  S: Standard
- **Type**
  02: With grooved ball bearings
- **Type**
- **Cantilever axis**

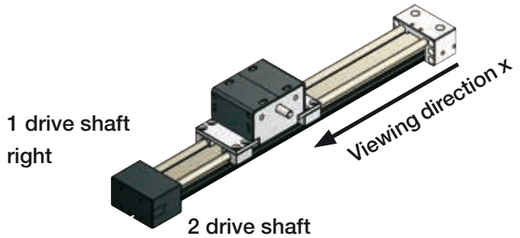

Dimensions [mm]

Part No.	A	H	H2	LG	Al	ha	d	l	l7	lz	E2	E3
	–0.3				±0.3	±0.1	h9	+1			±0.15	±0.15
ZAW-1040	74	91	75	242	150	74	10	20	15	75	60	60

Part No.	B	B2	htf	ltf	ff	fa	lta	E4	B4	B7	E5	E6	E7
Connecting dimensions	–0.3			±0.3	±0.1	h9	±0.1		±0.15		±0.15		
ZAW-1040	M6	M8	44	52	2	5	40	20	M6	M6	26	62	44

drylin® ZLW | Toothed belt axes | Product range

Aluminium version

Stainless steel version

- Dynamic due to drive and end support shafts supported on ball bearings
- Robust wide round belt
- Central belt adjustment at the carriage
- Based on lubrication-free drylin® W linear guide system
- Variable motor connection due to solid and hollow shafts

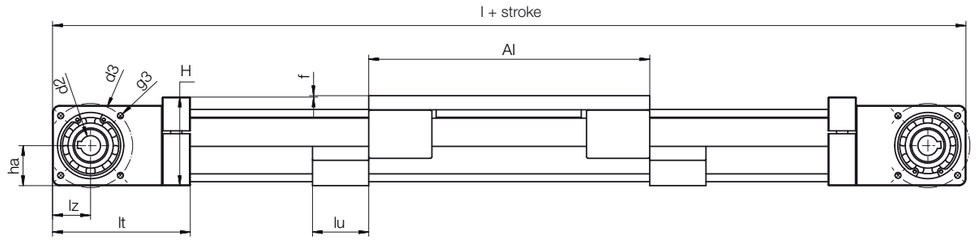

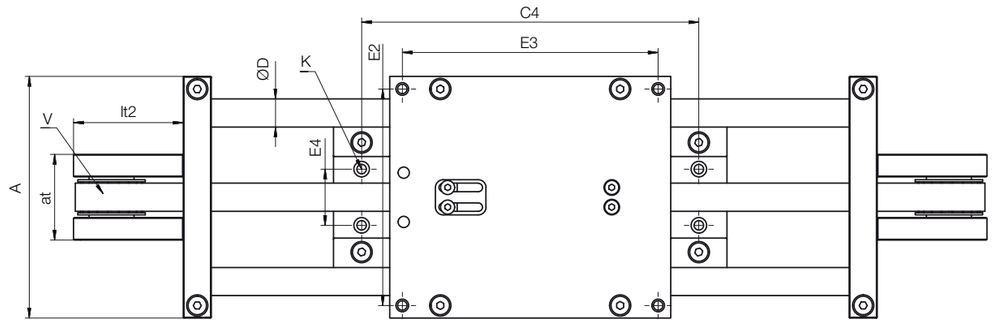

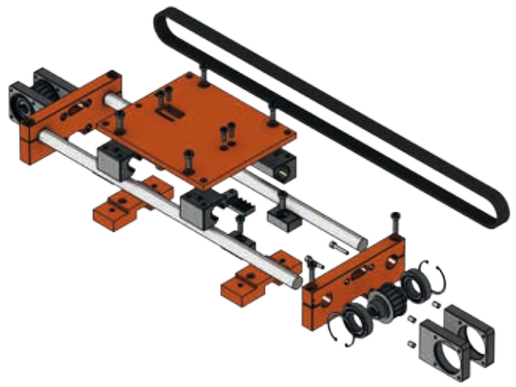

drylin® ZLW toothed belt axes

drylin® ZLW | Toothed belt axes | Product range

Order key

ZLW-20120-AL-02-S-200-H-2000

- **Stroke length**
  max. 3,000 mm
- **Drive shaft**
  Hollow shaft
- **Carriage length**
  200: 200 mm
- **Type**
  S: Standard
- **Type**
  02: With grooved ball bearings
- **Design**
  AL: Aluminium
  ES: Stainless steel
- **Axis distance**
  120: 120 mm
  160: 160 mm
  200: 200 mm
- **Type**
  Belt drive axis

Technical data

Part No.	Max. stroke length [mm]	Transmission [mm/U]	Tooth profile	Belt drive -material	Belt drive -tension [N]
ZLW-20120	3,000	140	8M	PU with steel cable	750
ZLW-20160	3,000	140	8M	PU with steel cable	750
ZLW-20200	3,000	140	8M	PU with steel cable	750

Dimensions [mm]

Part No.	A	Al	H	E2	E3	E4	C4	f	lt	ha	lz	l	d2 h7
ZLW-20120	172	200	63	154	182	40	240	-	98	28.5	27	396	14
ZLW-20160	212	200	63	194	182	80	240	-	98	28.5	27	396	14
ZLW-20200	252	200	63	234	182	120	240	-	98	28.5	27	396	14

Part No.	d3	g3	D	K For DIN912 - M6	at	lt2	lu	V [mm/rev]
ZLW-20120	60	M5	20	M8	61	78	40	144
ZLW-20160	60	M5	20	M8	61	78	40	144
ZLW-20200	60	M5	20	M8	61	78	40	144

Order key complete system:

ZLW-0630-OD-02-B-60-L-2000

Stroke length
- **ZLW-0630:** Max.1,000 mm, OD-Version max. 1,000 mm
- **ZLW-1040:** Max.2,000 mm, OD-Version max. 1,500 mm
- **ZLW-1080:** Max. 2,000 mm
- **ZLW-1660:** Max. 3,000 mm

Drive shaft
- **L:** Drive shaft left
- **R:** Drive shaft right
- **L/R:** Drive shaft both sides

Length of carriage
- **60:** 60 mm
- **100:** 100 mm
- **150:** 150 mm
- **200:** 200 mm
- **250:** 250 mm

Design
- **S:** Type series – Standard
- **B:** Type series – Basic
- **E:** Type series – Eco

Type
- **02:** With grooved ball bearings

Options
- **OD:** Reverse (0630/1040)
- **LT:** For cold applications (1040)
- **UW:** For underwater applications (1040)
- **SW:** For splash water applications (1040)

Type
- 0630
- 1040
- 1660

Belt drive axis

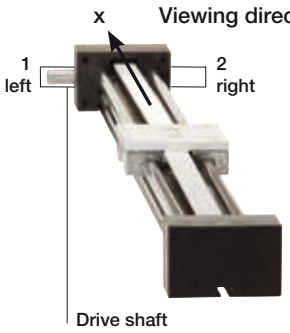

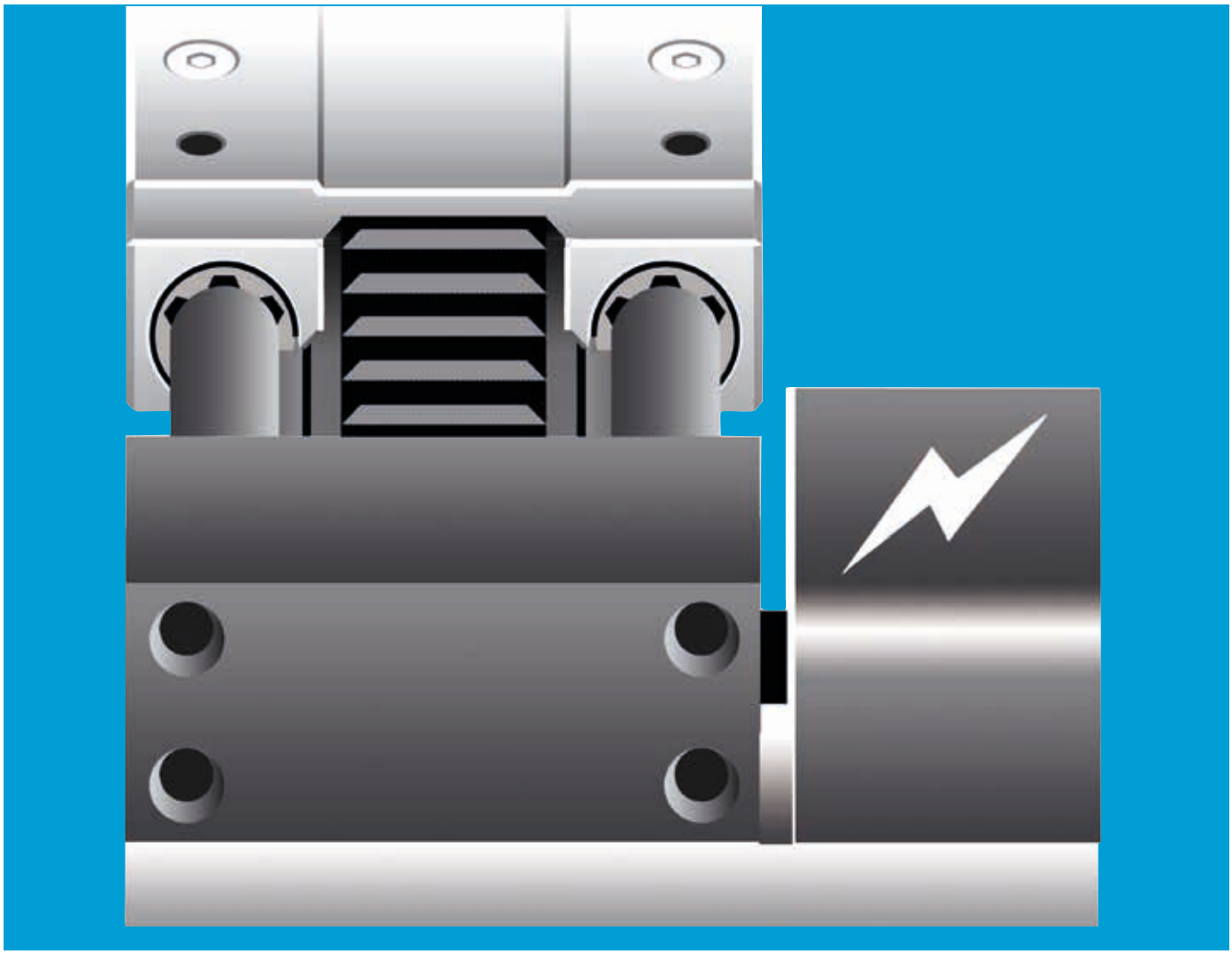

drylin® electric drive technology – drylin® E

Lubrication-free linear modules with stepper and DC motors

Drive: Lead screw, toothed belt or rack

Individual stroke lengths

Pre-configured linear axes and multi-axis linear robots available from 24 h

Lubrication and maintenance-free

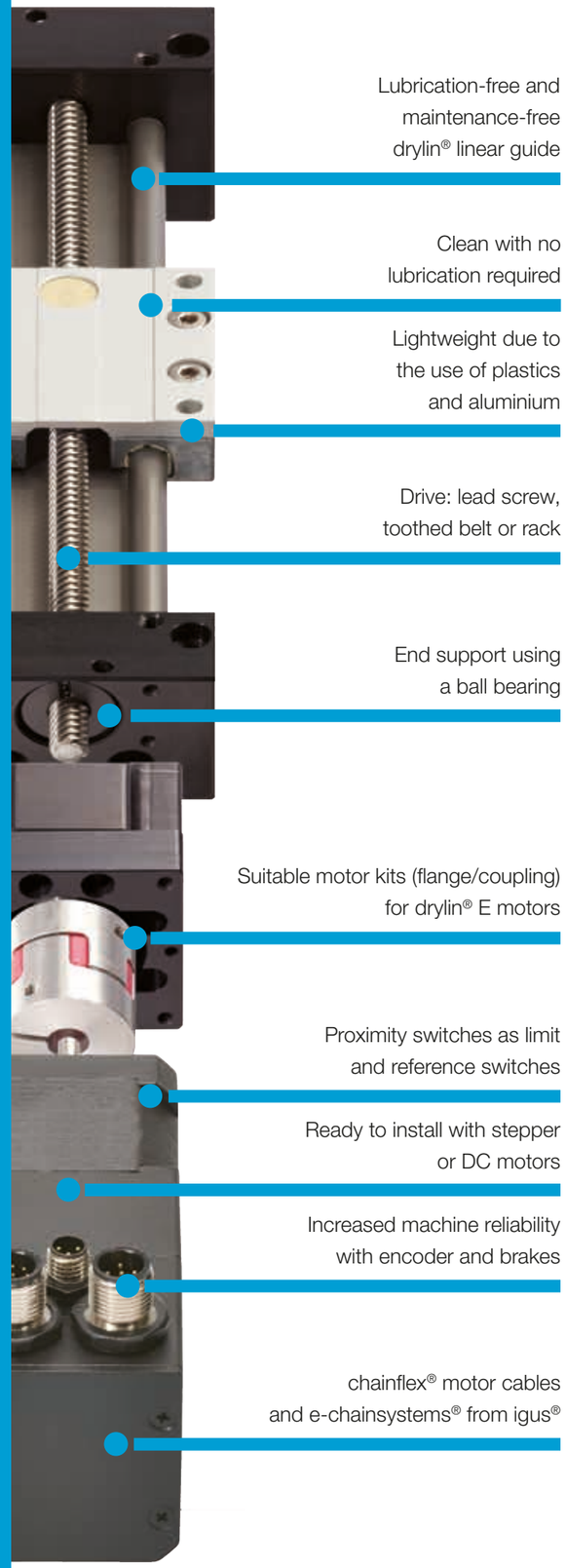

Automation with drylin® E

The requirements for motorised adjustments are becoming ever more demanding, installation spaces are reducing in size and customised solutions are sought for many systems. drylin® offers the right linear axis for almost any installation size based on a thread, toothed belt or rack drive. Thanks to drylin® E automation technology, drylin® linear axes can be operated with hybrid stepper motors or DC motors. Integrated encoders and freely positionable proximity switches offer outstanding machine reliability. The design can be flexibly adapted to the level of available space. The combination of linear axes makes it possible to offer entire linear robot structures as linear/flat or room linear robots. For rapid solutions, igus® offers preconfigured and assembled systems from stock. All drylin® linear axes can be calculated online and configured and ordered entirely ready for installation and connection.

- Lubrication-free linear axes
- Clean and dirt resistant operation
- Extensive accessories

Typical application areas

- Packaging technology
- Laboratory technology
- Machinery of all kinds
- Medical

Available from stock
Detailed information about delivery time online.

Block pricing online
No minimum order value. From batch size 1.

Product finder
▶ **www.igus.eu/drylinE-finder**

Linear axes with motor from 24h

- Pre-configured drylin® E linear axes available from stock
- Drive: lead screw or toothed belt
- NEMA stepper motor included

▶ **From page 1316**

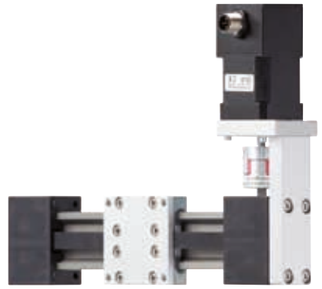

Individual linear axes with motor

- Online configurable drylin® E linear axes
- Drive: lead screw, toothed belt or rack
- With stepper and DC motors

▶ **From page 1318**

Multi-axis linear robots

- Pre-configured assembly kits available from stock
- 3 different types: linear / flat / room
- Workspaces up to 500 x 500 x 100 mm

▶ **From page 1342**

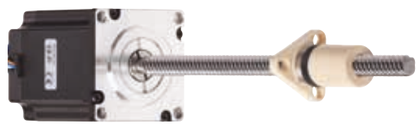

Lead screw motors

- Precise and efficient
- Compact structure, variable lead screw pitches
- Stepper motors with/without encoder

▶ **From page 1352**

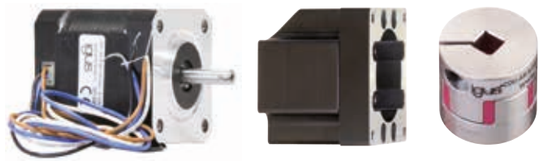

Electrical components and accessories

- Stepper and DC motors
- Limit and reference switches
- Couplings, motor flange and mounting accessories

▶ **From page 1357**

drylin® E | Linear axes with motor | Application examples

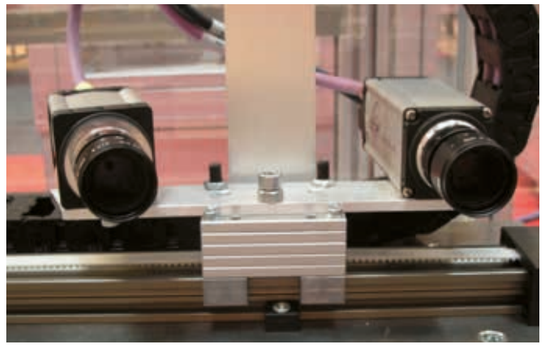

CAMERA ADJUSTMENT
Quiet, vibration and lubrication-free operation is given on this camera adjustment on a conveyor belt using a drylin® ZLW toothed belt axis.

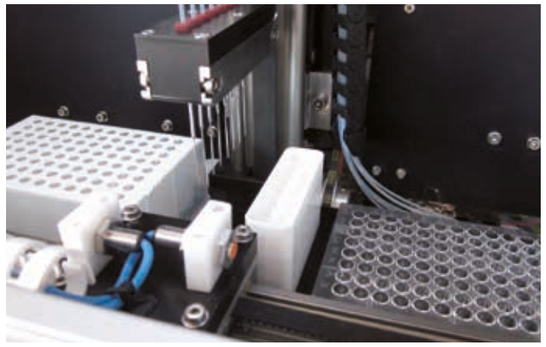

SAMPLER/PIPETTOR
Space-saving telescope adjustment through compact and lubrication-free drylin® ZLW toothed belt axes. (Sierra Sensors GmbH)

ADJUSTMENT OF INSPECTION EQUIPMENT
drylin® ZLW toothed belt axis in the inspection camera adjustment for the position inspection of sealing rings. (OLPE Jena GmbH)

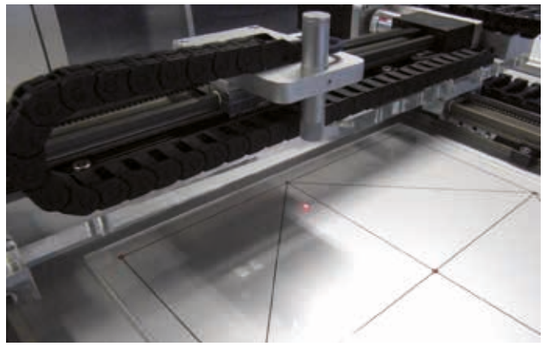

SENSOR ADJUSTMENT/MEASURING SYSTEMS
drylin® ZLW-0630 toothed belt axes as a two-dimensional linear robot (X,Y axis) to adjust a laser measuring head. Compact, lightweight and maintenance-free due to polymer plain bearings.

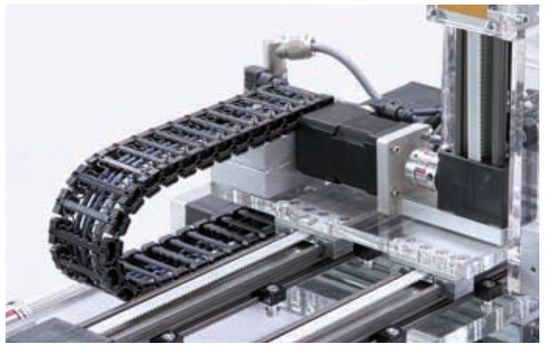

PICK AND PLACE
Fast and maintenance-free handling with drylin® toothed belt as a three-dimensional linear robots (X,Y,Z axis).

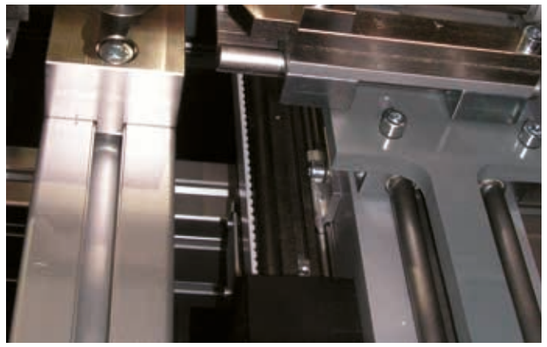

HANDLING OF SMALL PARTS
The tough and lubrication-free design of the ZLW and drylin® W profiles allows a long and maintenance-free process cycle.

www.igus.eu/drylinE-applications

drylin® E | Linear axes with motor | Product finder online

Complete drive technology configurable, incl. motors

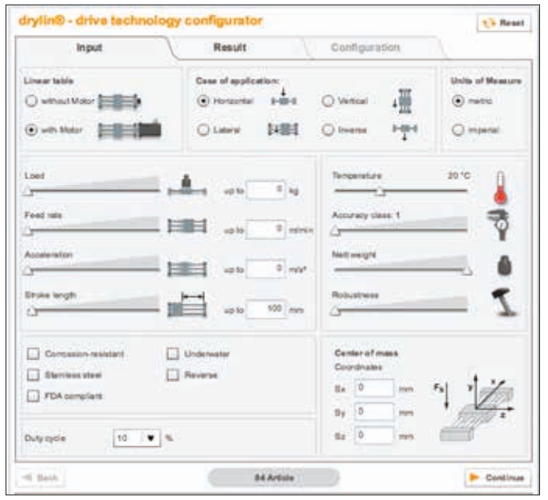

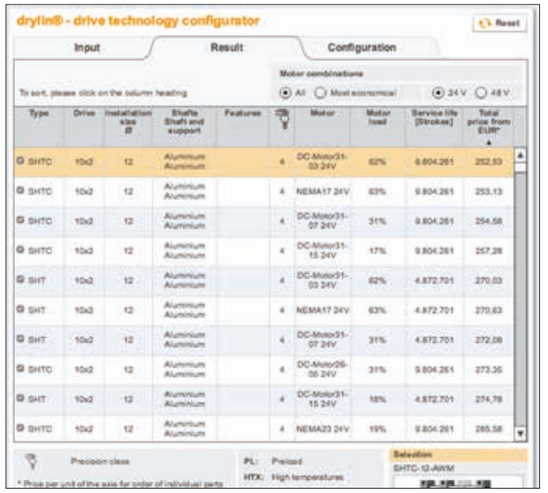

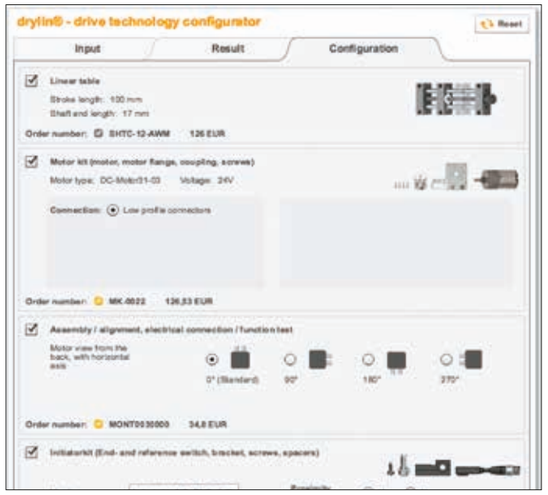

Complete drive technology configurable with or without motor

After you have selected your application parameters, the product finder shows an overview of the linear tables and the motors that are suitable. The product finder calculates the individual price of the linear axis as well as the utilization rate of the motors and the service life in strokes. With just few clicks, you can thus put together a complete linear axis incl. motor, connecting cables and built-on parts.

▶ www.igus.eu/linearmodule-configurator

drylin® E | Linear axes with motor | DLE

Linear axes with motor from stock – available in 24hrs

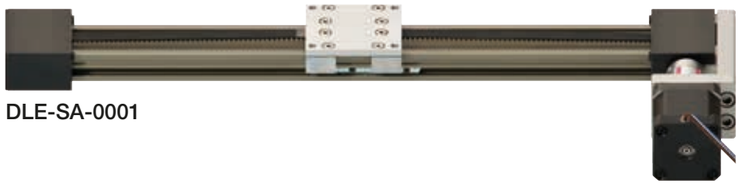

DLE-SA-0001

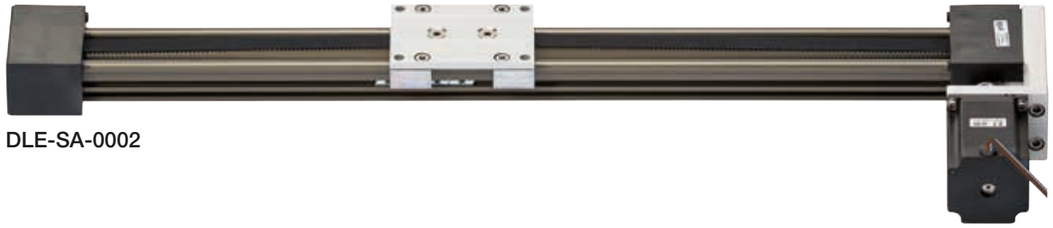

DLE-SA-0002

DLE-SA-0003

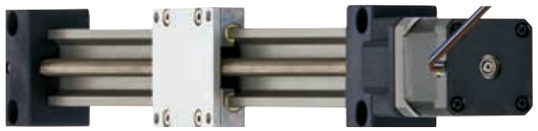

DLE-SA-0004

DLE-SA-0005

DLE-SA-0006

drylin® E | Linear axes with motor | DLE

drylin® E electrical drive technology

Available in 24 hours:
drylin® E linear axes with motor

igus® now delivers ready to install, pre-configured linear modules (drive: lead screw or toothed belt) from stock within 24 hours.
You simply choose between 3 sizes, 3 stroke lengths and 3 stepper motors ... and the system is delivered in 24 hours after you place your order.

- Drive: lead screw or toothed belt
- Completely lubrication-free
- Stepper motors with stranded wires
- Pre-assembled and tested
- Based on drylin® linear axes ZLW and SAW

Technical data

Part No.	Installation size	Carriage length	Stroke length	Motor type	Max. static load capacity	
					axial [N]	radial [N]
DLE-SA-0001	ZLW-0630 Basic	60	300	NEMA17 stranded wires	35	140
DLE-SA-0002	ZLW-1040 Basic	100	500	NEMA23 stranded wires	100	400
DLE-SA-0003	ZLW-1080 Standard	100	1,000	NEMA23XL stranded wires	150	600
DLE-SA-0004	SAW-0630 Tr08x1.5	60	250	NEMA17 stranded wires	100	400
DLE-SA-0005	SAW-1040 Tr10x2	69	500	NEMA23 stranded wires	500	2,000
DLE-SA-0006	SAW-1080 Tr12x3	100	500	NEMA23XL stranded wires	750	2,000

Dimensionally interchangeable with drylin® linear axes
- drylin® SAW ▶ **Page 1259**
- drylin® ZLW ▶ **Page 1293**

Technical data
- drylin® SAW ▶ **Page 1259**
- drylin® ZLW ▶ **Page 1293**

Further information about the motors
▶ **Page 1368**

drylin® E | Linear axes with motor | SHT

Linear axes with lead screw drive

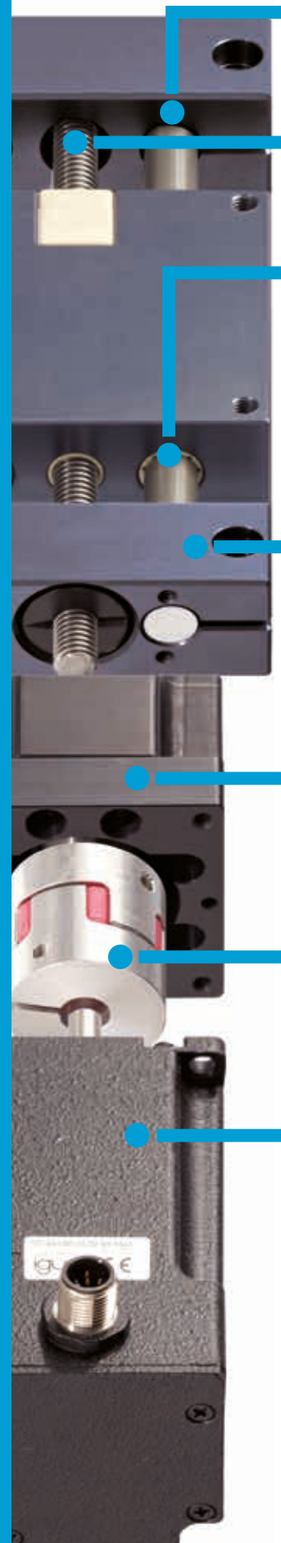

3 shaft materials

4 trapezoidal thread pitches
3 high helix thread pitches

Lubrication and maintenance-free with drylin® liners and lead screw nuts

Carriages and shaft end supports made from anodised aluminium

Motor flange: motor connections

Coupling

igus® DC motors
- Cost-effective
- Maintenance-free
- 4 versions
- Battery operation possible

igus® stepper motors
- Cost-effective
- Maintenance-free
- 5 sizes
- 17 versions

When to use it?
- For format adjustments and to position medium loads
- In extreme environments
- When a cost-effective, ready-to-fit solution is needed
- For low noise
- When installation space is limited

When not to use it?
- When high loads need to travel at highly dynamic forces
- When positioning accuracy <0.1 mm is necessary
- When high running speed is required in continuous operation

Drawings, dimensions, technical specifications, such as SHT ▶ Page 1232

More information ▶ www.igus.eu/drylinSHT

drylin® E | Linear axes with motor | SHT

drylin® E electrical drive technology

Order key

SHT-12-BBZB-AWM-S0020RG-750-17-L-S-000

Type

Installation size
- 12
- 20
- 30

Design
- **S:** Standard
- **PL:** Preload (50 N)
- **BB:** Ball bearing
- **BBPL:** Ball bearing, preload (50 N)
- **BBZB:** Ball bearing, zero-backlash (only SHT-12 with Sg10x12)

Shaft material
- **AWM:** Hard-anodised aluminium
- **SWM:** Cf53 (1.1213)
- **EWM:** Stainless steel X105 (1.4125)

Lead screw material
- **S:** Steel
- **E:** Stainless steel

Pitch

SHT-12
- **0020:** Tr10x2 mm (steel/stainless steel)
- **0030:** Tr10x3 mm (steel/stainless steel)
- **0120:** Sg10x12 mm (stainless steel)
- **0500:** Sg10x50 mm (stainless steel)

SHT-20
- **0040:** Tr18x4 mm (steel/stainless steel)

SHT-30
- **0050:** Tr24x5 mm (steel/stainless steel)

Thread
- **R:** Right | **L:** Left

Lead screw end
- **G:** Threaded end (with SHT-12)
- **Z:** End 12h9 (with SHT-20)
- **Z:** End 14h9 (with SHT-30)

Electrical connection alignment
- **000:** 0° (standard)
- **090:** 90°
- **180:** 180°
- **270:** 270°

Assembly
- **S:** Assembly on the drive shaft (standard)

Motor option
- **L:** Stranded wires
- **M:** Metric Connector
- **C:** Encoder
- **D:** Encoder and brake
- **F:** Low profile connector (DC motor)

Motor size
- **17:** NEMA17: recommended axis 12
- **23:** NEMA23: recommended axis 12/20
- **23XL:** NEMA23XL: recommended axis 20
- **34:** NEMA34: recommended axis 20/30
- **DC01:** DC motor: 0.1 Nm recommended axis 12
- **DC03:** DC motor: 0.3 Nm recommended axis 12
- **DC07:** DC motor: 0.7 Nm recommended axis 12
- **DC15:** DC motor: 1.5 Nm recommended axis 12

Stroke length
- **SHT-12:** max. 750 mm (BB max. 500 mm)
- **SHT-20:** max. 1000 mm (BB max. 900 mm)
- **SHT-30:** max 1250 mm (BB max. 1000 mm)

drylin® E | Linear axes with motor | SHTC

Linear axes with lead screw drive

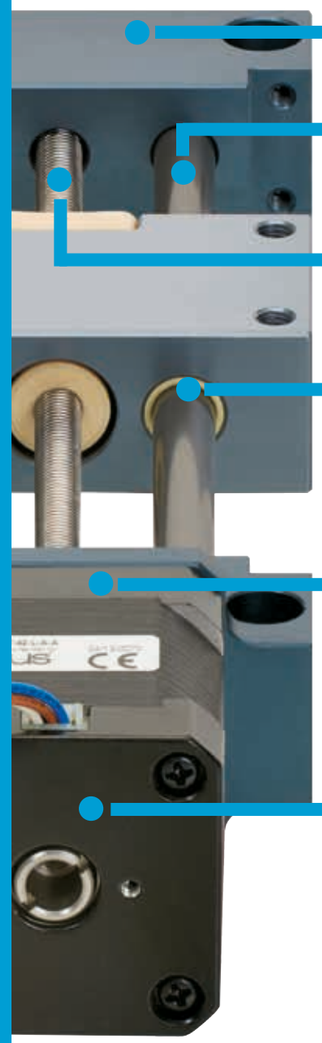

Carriages and shaft end supports made from anodised aluminium

3 shaft materials

4 trapezoidal thread pitches
3 high helix thread pitches

Lubrication and maintenance-free with drylin® liners and lead screw nuts

Motor flange and coupling: motor connections

igus® DC motors	igus® stepper motors
● Cost-effective	● Cost-effective
● Maintenance-free	● Maintenance-free
● 4 versions	● 5 sizes
● Battery operation possible	● 17 versions

Drawings, dimensions, technical specifications, such as SHTC ▶ Page 1234

drylin® E electrical drive technology

drylin® E | Linear axes with motor | SHTC

Order key

SHTC-08-ZB-A-E127RG-100-17-L-000

Type

Installation size

Design
ZB: Zero-backlash

Shaft material
AWM: Hard-anodised aluminium
EWM: Stainless steel X105 (1.4125)

Lead screw design
E020RG: Stainless steel, trapezoidal thread, pitch: 2 mm
E025RZ: Stainless steel dryspin®, pitch: 2.54 mm
E127RZ: Stainless steel high helix thread, pitch: 12.7 mm
E254RZ: Stainless steel dryspin®, pitch: 25.4 mm

Stroke length
Max. 300 mm

Motor size
17: NEMA17

Motor option
L: Stranded wires with motor flange
C: Encoder with motor flange
G: Lead screw motor with stranded wires
H: Lead screw motor with encoder

Electrical connection alignment
000: 0° (standard)
090: 90°
180: 180°
270: 270°

drylin® E | Linear axes with motor | SLW

Linear axes with lead screw drive

Lubrication and maintenance-free drylin® W linear profile guides

Hard anodised drylin® W aluminium profile (plain profile shape)

4 trapezoidal thread pitches
3 high helix thread pitches

Shaft end supports from aluminium or plastic

Motor flange: motor connections

Coupling

igus® DC motors
- Cost-effective
- Maintenance-free
- 4 versions
- Battery operation possible

igus® stepper motors
- Cost-effective
- Maintenance-free
- 5 sizes
- 17 versions

When to use it?

- For format adjustments and to position medium loads
- In extreme environments
- When a cost-effective, ready-to-fit solution is needed
- For low noise
- When installation space is limited

When not to use it?

- When high loads need to travel at highly dynamic forces
- When positioning accuracy <0.1 mm is necessary
- When high running speed is required in continuous operation

Drawings, dimensions, technical specifications, such as SLW ▶ Page 1248

More information ▶ www.igus.eu/drylinSLW

drylin® E | Linear axes with motor | SLW

drylin® E electrical drive technology

Order key

SLW-1040-EPL-07-S 0020 R G-750-17-L-S-000

Type

Installation size
- 0630
- 1040/1080
- 1660
- 2080

Design

SLW-0630
- **BB:** Ball bearing

SLW-1040/1080/1660/2080
- **S:** Standard
- **E:** Adjustable linear bearing
- **PL:** Preload (50 N)
- **EPL:** Adjustable, preload (50 N)
- **BB:** Ball bearing
- **BBE:** Ball bearing, adjustable linear bearing
- **BBPL:** Ball bearing, preload (50 Nm)
- **BBEPL:** Ball bearing, adjustable linear bearing, preload (50N)

Carriage length

SLW-0630
- **06:** 60 mm (standard)

SLW-1040
- **07:** 69 mm (standard)
- **10:** 100 mm
- **15:** 150 mm

SLW-1080/1660/2080
- **15:** 150 mm (standard)

Lead screw material
- **S:** Steel
- **E:** Stainless steel

Pitch

SLW-0630
- **0015:** Tr08x1.5 mm (steel)
- **0150:** Sg08x15 mm (stainless steel)

SLW-1040/1080
- **0020:** Tr10x2 mm (steel/stainless steel)
- **0030:** Tr10x3 mm (steel/stainless steel)
- **0120:** Sg10x12 mm (stainless steel)
- **0500:** Sg10x50 mm (stainless steel)

SLW-1660
- **0040:** Tr14x4 mm (steel/stainless steel)

SLW-2080
- **0040:** Tr18x4 mm (steel/stainless steel)

Thread
- **R** : Right
- **L** : Left

Lead screw end
- **G:** Threaded end
- **Z:** End 12h9 (with SLW-2080)

Stroke length
- **SLW-0630:** max. 300 mm
- **SLW-1040/1080:** max. 750 mm (BB: max.500 mm)
- **SLW-1660:** max 750 mm
- **SLW-2080:** max 1000 mm (BB: 900 mm)

Motor size/Recommended axis
- **17:** NEMA17 / 0630
- **23:** NEMA23 / 1040, 1080
- **23XL** NEMA23XL / 1040, 1080, 1660
- **34:** NEMA 34 / 2080
- **DC01:** DC motor: 0.1 Nm / 0630
- **DC03:** DC motor: 0.3 Nm / 0630, 1040
- **DC07:** DC motor: 0.7 Nm / 1040
- **DC15:** DC motor: 1.5 Nm / 1040, 1660

Motor option
- **L:** Stranded wires
- **M:** Metric Connector
- **C:** Encoder
- **D:** Encoder and brake
- **F:** Low profile connector (DC motor)

Assembly
- **S:** Assembly on the drive shaft (standard)

Electrical connection alignment
- **000:** 0° (standard)
- **090:** 90°
- **180:** 180°
- **270:** 270°

drylin® E | Linear axes with motor | SAW

Linear axes with lead screw drive

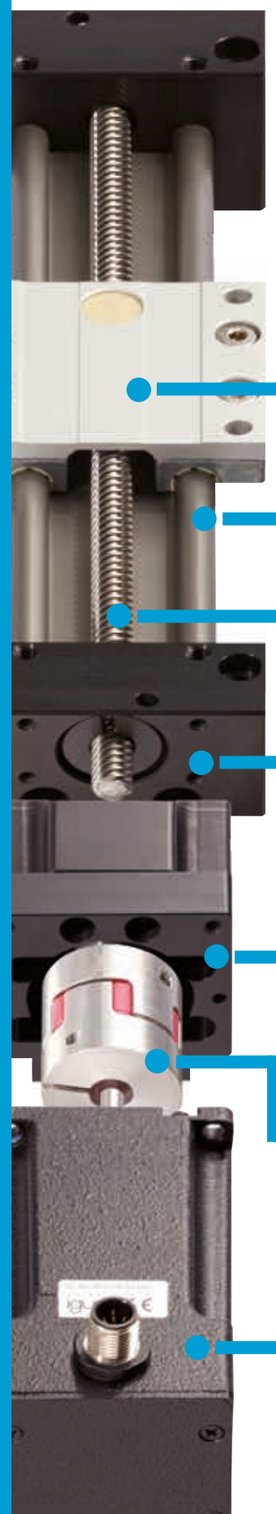

When to use it?

- For format adjustments and to position medium loads
- In extreme environments
- When a cost-effective, ready-to-fit solution is needed
- For low noise
- For unsupported installations

When not to use it?

- When high loads need to travel at highly dynamic forces
- When positioning accuracy <0.1 mm is necessary
- When high running speed is required in continuous operation

Lubrication and maintenance-free drylin® W linear profile guides

Hard anodised drylin® W aluminium profile (high profile shape)

4 trapezoidal thread pitches
3 high helix thread pitches

Shaft end supports from aluminium or plastic

Motor flange: motor connections

Coupling

igus® DC motors
- Cost-effective
- Maintenance-free
- 4 versions
- Battery operation possible

igus® stepper motors
- Cost-effective
- Maintenance-free
- 5 sizes
- 17 versions

Drawings, dimensions, technical specifications, such as SAW ▶ Page 1262

More information ▶ www.igus.eu/drylinSAW

drylin® E | Linear axes with motor | SAW

drylin® E electrical drive technology

Order key

SAW-1040-EPL-07-S0020RG-450-17-M-S-000

Type

Installation size
- 0630
- 1040
- 1660

Design

SAW-0630
- **S:** Standard
- **M:** Mono carriage (plastic)

SAW-1040/1660
- **S:** Standard
- **E:** Adjustable linear bearing
- **PL:** Preload (50 N)
- **EPL:** Adjustable, preload (50 N)

Carriage length

SAW-0630
- **06:** 60 mm (standard)

SAW-1040
- **07:** 69 mm (standard)
- **10:** 100 mm
- **15:** 150 mm

SAW-1660
- **15:** 150 mm (standard)

Lead screw material
- **S:** Steel
- **E:** Stainless steel

Pitch

SAW-0630
- **0015:** Tr08x1.5 mm (steel)
- **0150:** Sg08x15 mm (stainless steel)

SAW-1040
- **0020:** Tr10x2 mm (steel/stainless steel)
- **0030:** Tr10x3 mm (steel/stainless steel)
- **0120:** Sg10x12 mm (stainless steel)
- **0500:** Sg10x50 mm (stainless steel)

SAW-1660
- **0040:** Tr14x4 mm (steel/stainless steel)

Electrical connection alignment
- **000:** 0° (standard)
- **090:** 90°
- **180:** 180°
- **270:** 270°

Assembly
- **S:** Assembly on the drive shaft (standard)

Motor option
- **L:** Stranded wires
- **M:** Metric connector
- **C:** Encoder
- **D:** Encoder and brake
- **F:** Low profile connector (DC motor)

Motor size
- **17:** NEMA17: recommended axis 0630
- **23:** NEMA23: recommended axis 1040
- **23XL:** NEMA23XL: recommended axis 1040
- **DC01:** DC motor: 0.1 Nm recommended axis 0630
- **DC03:** DC motor: 0.3 Nm recommended axis 0630/1040
- **DC07:** DC motor: 0.7 Nm recommended axis 0630
- **DC15:** DC motor: 1.5 Nm recommended axis 1040/1660

Stroke length
- **SAW-0630:** max. 300 mm
- **SAW-1040:** max. 500 mm
- **SAW-1660:** max. 750 mm

Lead screw end
- **G:** Threaded end

Thread
- **R:** Right | **L:** Left

drylin® E | Linear axes with motor | SAWC

Linear axes with lead screw drive

When to use it?

- For format adjustments and to position medium loads
- When a compact solution with optimised useful full-length ratio is required
- For special requirement on the running behaviour
- When a cost-effective, ready-to-fit solution is needed
- For low noise
- For unsupported installations

When not to use it?

- When high loads need to travel at highly dynamic forces
- When positioning accuracy <0.1 mm is necessary
- When high running speed is required in continuous operation

Shaft end support made from aluminium

Hard anodised drylin® W aluminium profile (high profile shape)

2 trapezoidal thread pitches
3 high helix thread pitches

Lubrication and maintenance-free drylin® W linear profile guides

igus® stepper motors
- Cost-effective
- Maintenance-free
- 2 sizes

Drawings, dimensions, technical specifications, such as SLN ▶ Page 1263

More information ▶ www.igus.eu/drylinSAWC

drylin® E | Linear axes with motor | SAWC

drylin® E electrical drive technology

Order key

SAWC-1040-EPL-07-S0020RG-300-17-L-S-090

Type

Installation size
- 0630
- 1040

Design

SAWC-0630
- **S:** Standard
- **M:** Mono carriage (plastic)

SAWC-1040
- **S:** Standard
- **E:** Adjustable linear bearing
- **PL:** Preload (50 N)
- **EPL:** Adjustable, preload (50 N)

Carriage length

SAWC-0630
- **06:** 60 mm (standard)

SAWC-1040
- **07:** 69 mm (standard)
- **10:** 100 mm
- **15:** 150 mm

Lead screw material
- **S:** Steel
- **E:** Stainless steel

Pitch

SAWC-0630
- **0015:** Tr08x1.5 mm
- **0150:** Sg08x15 mm (stainless steel)

SAWC-1040
- **0020:** Tr10x2 mm
- **0120:** Sg10x12 mm (stainless steel)
- **0500:** Sg10x50 mm

Electrical connection alignment
- **000:** 0° (standard)
- **090:** 90°
- **180:** 180°
- **270:** 270°

Assembly
- **S:** Assembly on the drive shaft (standard)

Motor option
- **L:** Stranded wires

Motor size
- **17:** NEMA17: recommended axis 0630
- **23:** NEMA23: recommended axis 1040

Stroke length

SAWC-0630: max. 300 mm
SAWC-1040: max. 500 mm

Lead screw end
- **G:** Threaded end

Thread
- **R :** Right

drylin® E | Linear axes with motor | SHTP

Linear axes with lead screw drive

Drive: trapezoidal or high-helix lead screw

Lubrication and maintenance-free due to drylin® liners and lead screw nuts

Carriages and shaft end supports made from polymers

Cost-effective motor flange made from curved sheet metal

Coupling

drylin® E NEMA17 stepper motors or drylin® E DC motors

When to use it?

- Cost-effective lead screw linear module with motor
- Loads up to 40 N
- Up to 100 rpm
- Maintenance and lubrication-free operation

When not to use it?

- When positioning accuracy < 0.3 mm is required
- For stroke lengths > 300 mm
- For long-term use

Drawings, dimensions, technical specifications, such as SHTP ▶ Page 1269

drylin® E | Linear axes with motor | SHTP

drylin® E electrical drive technology

Order key

SHTP-03-12-AWM-S0020RG-750-17-L-S-000

Type

Installation size

Shaft material
- **AWM:** Hard-anodised aluminium

Lead screw material
- **S:** Steel
- **E:** Stainless steel

Lead screw design
- **0020:** Tr10x2 mm (steel/stainless steel)
- **0030:** Tr10x3 mm (steel/stainless steel)
- **0120:** Sg10x12 mm (stainless steel)
- **0500:** Sg10x50 mm (stainless steel)

Thread
- **R:** Right | **L:** Left

Lead screw end
- **G:** Threaded end, unmachined
- **Z:** Threaded pin Ø6h9

Stroke length
max. 300 mm

Motor size
- **17:** Stepper motor NEMA 17
- **DC03:** DC motor: 0.3 Nm

Motor option
- **L:** Stranded wires with motor flange
- **C:** Encoder with motor flange
- **G:** Lead screw motor with stranded wires
- **H:** Lead screw motor with encoder

Assembly
- **S:** Assembly on the drive shaft (standard)

Electrical connection alignment
- **000:** 0° (standard)
- **090:** 90°
- **180:** 180°
- **270:** 270°

drylin® E | Linear axes with motor | SLT

Linear axes with lead screw drive

Drive: trapezoidal or high-helix lead screw

Lubrication and maintenance-free due to drylin® liners and lead screw nuts

Carriage and shaft end made from anodised aluminium

Hard anodised drylin® T miniature guide rail

drylin® E NEMA17 stepper motors or drylin® E DC motors

When to use it?

- Extremely compact
- Pitch up to 15 mm/rev
- Variable lead screw alignment

When not to use it?

- Pitches > 50 mm
- When a large mounting surface is required
- When high loads need to travel at highly dynamic forces

Drawings, dimensions, technical specifications, such as SLT ▶ Page 1281

drylin® E electrical drive technology

drylin® E | Linear axes with motor | SLT

Order key

SLT-BB-0412-ER-S0015RG-750-17-L-S-000

Type

Design
BB: With ball bearings

Installation size
04-12
04-15

Carriage
E: Adjustable carriage TWE

Lead screw alignment
R: Lead screw right
L: Lead screw left

Lead screw design
0015: Tr10x1.5 mm (steel/stainless steel)
0030: Tr10x3 mm (steel/stainless steel)
0060: Tr12x6 mm (steel/stainless steel)
0150: Sg08x15 mm (stainless steel)
0250: Sg12x20 mm (stainless steel)

Thread
R: Lead screw right

Lead screw end
G: Threaded end

Electrical connection alignment
000: 0° (standard)
090: 90°
180: 180°
270: 270°

Assembly drive shaft
S: Motor assembly on the drive shaft (standard)

Motor option
L: Stranded wires with motor flange
M: Metric connectors
C: Encoder
D: Encoder and brake
F: Low profile connector (DC)

Motor size
17: NEMA 17
23: NEMA 23
DC01: DC motor: 0.1 Nm
DC03: DC motor: 0.3 Nm
DC07: DC motor: 0.7 Nm
DC15: DC motor: 1.5 Nm

Stroke length
SLT-04-12: max. 300 mm
SLT-04-15: max. 600 mm

drylin® E | Linear axes with motor | SLN

Miniature linear axis with lead screw drive

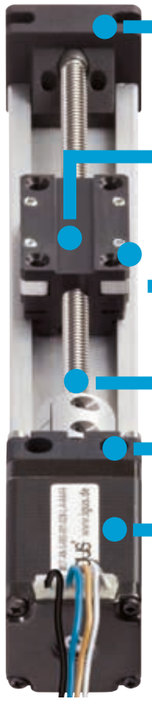

Base body made from corrosion resistant structural plastic

Polymer bearings and lead screw nuts give lubrication-free operation

Lubrication and maintenance-free drylin® N low profile linear guides

1 trapezoidal thread pitch, 1 high helix thread pitch

Motor flange: motor connections

igus® stepper motors
- Cost-effective
- Maintenance-free
- 1 size
- 2 versions

Order key

SLN-27-14-0050-100-11-L-S-000

Type

Installation size

Shaft end support
- **1:** Plain bearing
- **2:** Ball bearing

Carriage
- **3:** Basic
- **4:** Standard, adjustable
- **5:** Standard, pre-load

Pitch
- **0008:** M5x0.8 (stainless steel)
- **0050:** Sg5x5 (stainless steel)
- **0025:** Dst6.35x2.54 (stainless steel)
- **0127:** Sg6.35x12.7 (stainless steel)
- **0254:** Dst6.35x25.4 (stainless steel)

Stroke length
max. 250 mm

Options
- **HR:** Hand wheel
- **D1-F:** DC motor, 0.025 Nm, 375 rpm
- **E1-F:** DC motor, 0.06 Nm, 137 rpm
- **J1-F:** DC motor, 0.19 Nm, 36 rpm
- **11-L:** NEMA11, stranded wires
- **11-C:** NEMA11, encoder/stranded wires
- **11-G:** NEMA11 lead screw motor, stranded wires
- **11-H:** NEMA11 lead screw motor, encoder/ stranded wires

Assembly
- **S:** Assembly on the drive shaft (standard)

Motor pin alignment
- **000**: 0° (standard)
- **090:** 90°
- **180:** 180°
- **270:** 270°

Drawings, dimensions, technical specifications, such as SLN ▶ Page 1285

drylin® E | Linear axes with motor | GRW

Cantilever axis with rack drive

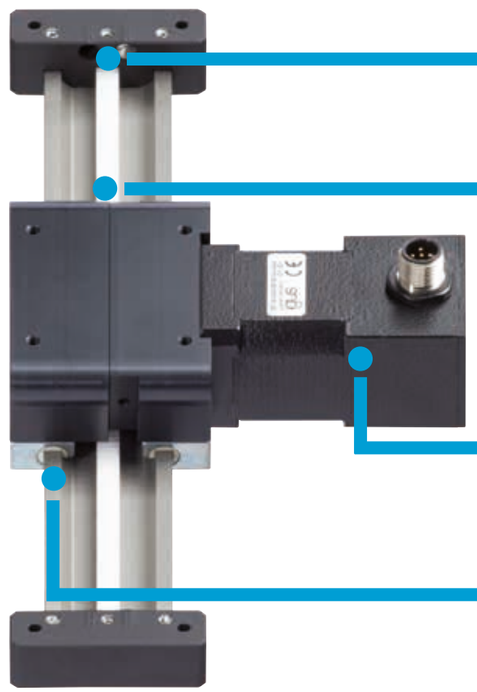

Aluminium base body

Assembly option for limit reference switch already integrated

igus® stepper motors
- Cost-effective
- Maintenance-free
- 1 size
- 4 versions

Lubrication and maintenance-free drylin® W linear profile guides

More information
▶ www.igus.eu/drylinGRW

Order key

GRW-0630-A-80-150-17-L-S-000

Type

Installation size
0630

Design
- **A:** Standard
- **B:** Longer stroke

Carriage length
- **80:** 80 mm

Stroke length
- **A:** max. 150 mm
- **B:** max. 300 mm

Motor size
- **17:** NEMA17

Motor option
- **L:** Stranded wires
- **M:** Metric connectors
- **C:** Encoder
- **D:** Encoder and brake

Assembly
- **S:** Assembly with one drive shaft (standard)

Motor pin alignment
- **000**: 0° (standard)
- **090:** 90°
- **180:** 180°
- **270:** 270°

Drawings, dimensions, technical specifications, such as GRW ▶ Page 1290

drylin® E | Linear axes with motor | GRQ

Gripper axis with rack drive

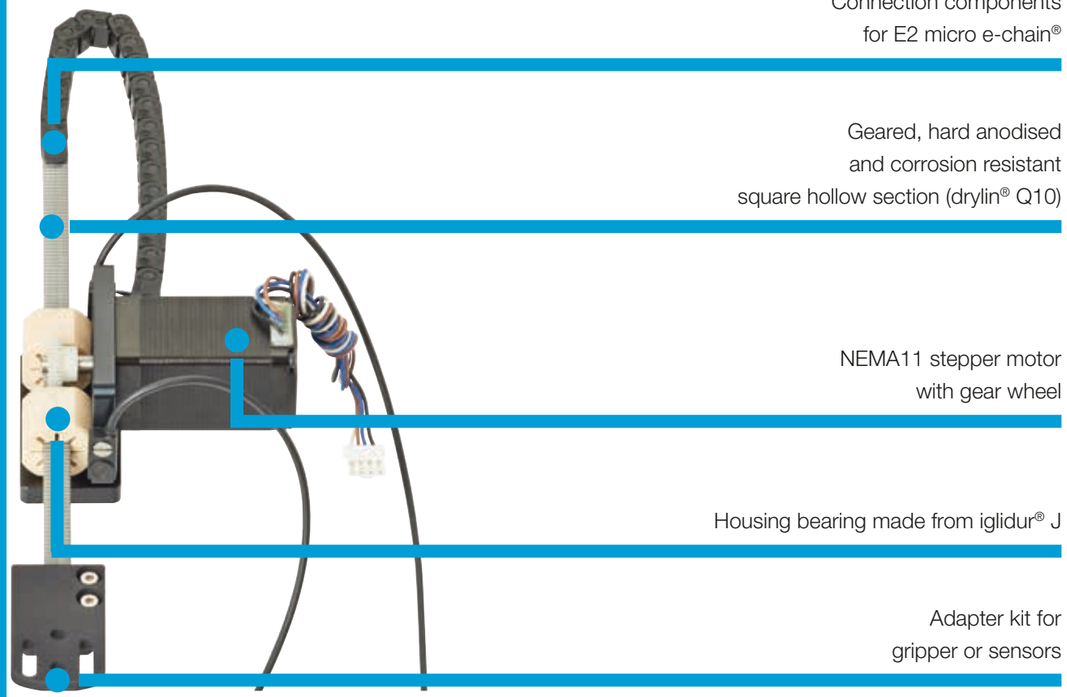

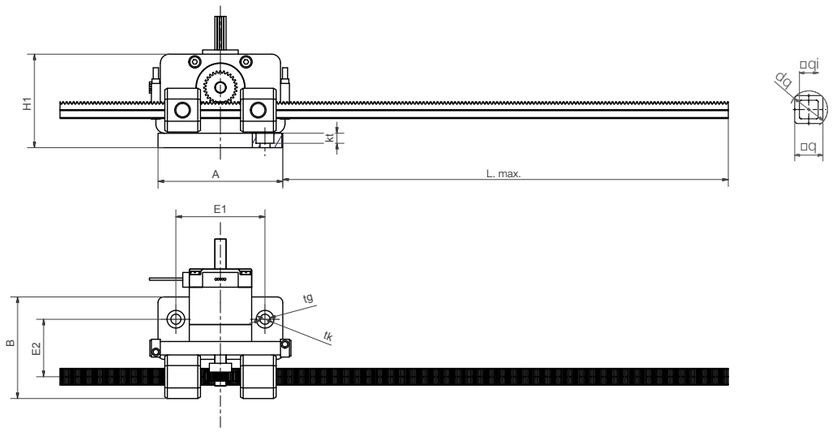

Dimensions [mm]

Part No.	F	v	L	A	H1	E1	E2	B	tg	tk	kt	B	q	dq	qi
	[N]	[m/s]	Max.												±0.02
GRQ-10-A-56-120-11-L-01-000	5	0.7	200	56	42	40	26	46	4.5	8	4.5	52	7.5	10	5

Drawings, dimensions, technical specifications, such as GRQ ▶ Page 1291

drylin® E | Linear axes with motor | GRQ

drylin® E electrical drive technology

Order key

GRQ-10-A-56-000-120-11-L-S-000

Type

Installation size

Design
- **A:** Standard

Drive unit width

End switch/proximity switch
- **0:** Without
- **1:** Proximity switch L
- **2:** Proximity switch R
- **3:** Proximity switch L + R
- **4:** Proximity switch + trigger L
- **5:** Proximity switch + trigger R
- **6:** Proximity switch + trigger L + R

Chain connection/ energy supply
- **0:** Without
- **1:** Chain connection L
- **2:** Chain connection R

Adapter / accessories
- **0:** Without
- **1:** Adapter plate L
- **2:** Adapter plate R

Motor pin alignment
- **000:** 0° (standard)
- **090:** 90°
- **180:** 180°
- **270:** 270°

Assembly
- **S:** Standard

Motor option
- **L:** Stranded wires
- **C:** Encoder, stranded wires

Motor size
- **11:** NEMA11

Stroke length

max. 200 mm

drylin® E | Linear axes with motor | ZLW

Linear axes with toothed belt

When to use it?

- Fast positioning of small loads
- Quiet operation
- Slim design
- Long-term use

When not to use it?

- When high loads must be motion controlled at high dynamic speeds
- When positioning accuracy <0.1 mm is necessary

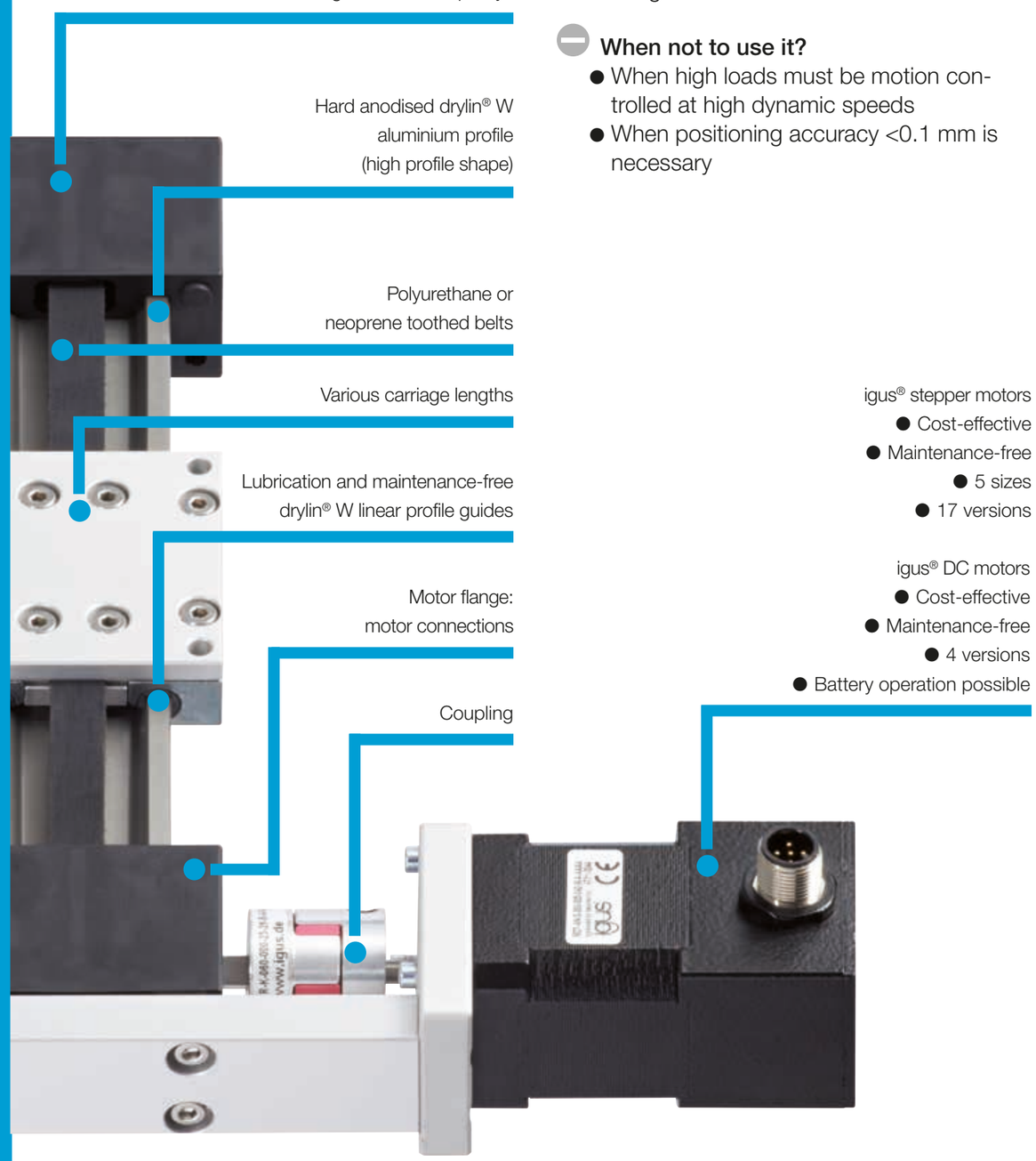

igus® stepper motors
- Cost-effective
- Maintenance-free
- 5 sizes
- 17 versions

igus® DC motors
- Cost-effective
- Maintenance-free
- 4 versions
- Battery operation possible

Drawings, dimensions, technical specifications, such as ZLW ▶ Page 1295

drylin® E electrical drive technology

drylin® E | Linear axes with motor | ZLW

Order key

ZLW-1040-02-B-60-L-750-17-M-S-000

Type
ZLW

Installation size
0630
0630
1040
1660

Type
02: With deep groove ball bearings

Design
E: Type series Eco

Carriage length
60: 60 mm (only ZLW 0630)
100: 100 mm
150: 150 mm
200: 200 mm
250: 250 mm

Drive shaft
L: Left-hand drive shaft
R: Right-hand drive shaft
L/R: Drive both sides

Stroke length
ZLW-0630: max. 1,000 mm
ZLW-1040: max. 2,000 mm
ZLW-1660: max. 3,000 mm

Electrical connection alignment
000: 0° (standard)
090: 90°
180: 180°
270: 270°

Assembly
Drive shaft on one side [135]
S: Motor assembly on defined drive shaft (L or R)
Drive shaft on both sides (L/R) [136]
L: Motor assembly on drive shaft left
R: Motor assembly on drive shaft right

Motor option
L: Stranded wires
M: Metric connectors
C: Encoder
D: Encoder and brake
F: Low profile connector (DC motor)

Motor size
17: NEMA17: recommended axis 0630
23: NEMA23: recommended axis 1040
23XL: NEMA23XL:recommended axis 1040
34: NEMA34: recomm. axis 1040/1660
DC01: DC motor 0.1 Nm: recommended axis 0630
DC03: DC motor: 0.3 Nm: recommended axis 0630
DC07: DC motor: 0.7 Nm recommended axis 1040
DC15: DC motor: 1.5 Nm recommended axis 1040

[135] **Assembly example, drive shaft on one side (connection alignment 0°):**

S: Motor assembly on defined drive shaft (L or R)

[136] **Assembly example, drive shaft on both sides (connection alignment 0°):**

L: Motor assembly on drive shaft left **R:** Motor assembly on drive shaft right

drylin® E | Linear axes with motor | ZLW-Eco

Linear axes with toothed belt

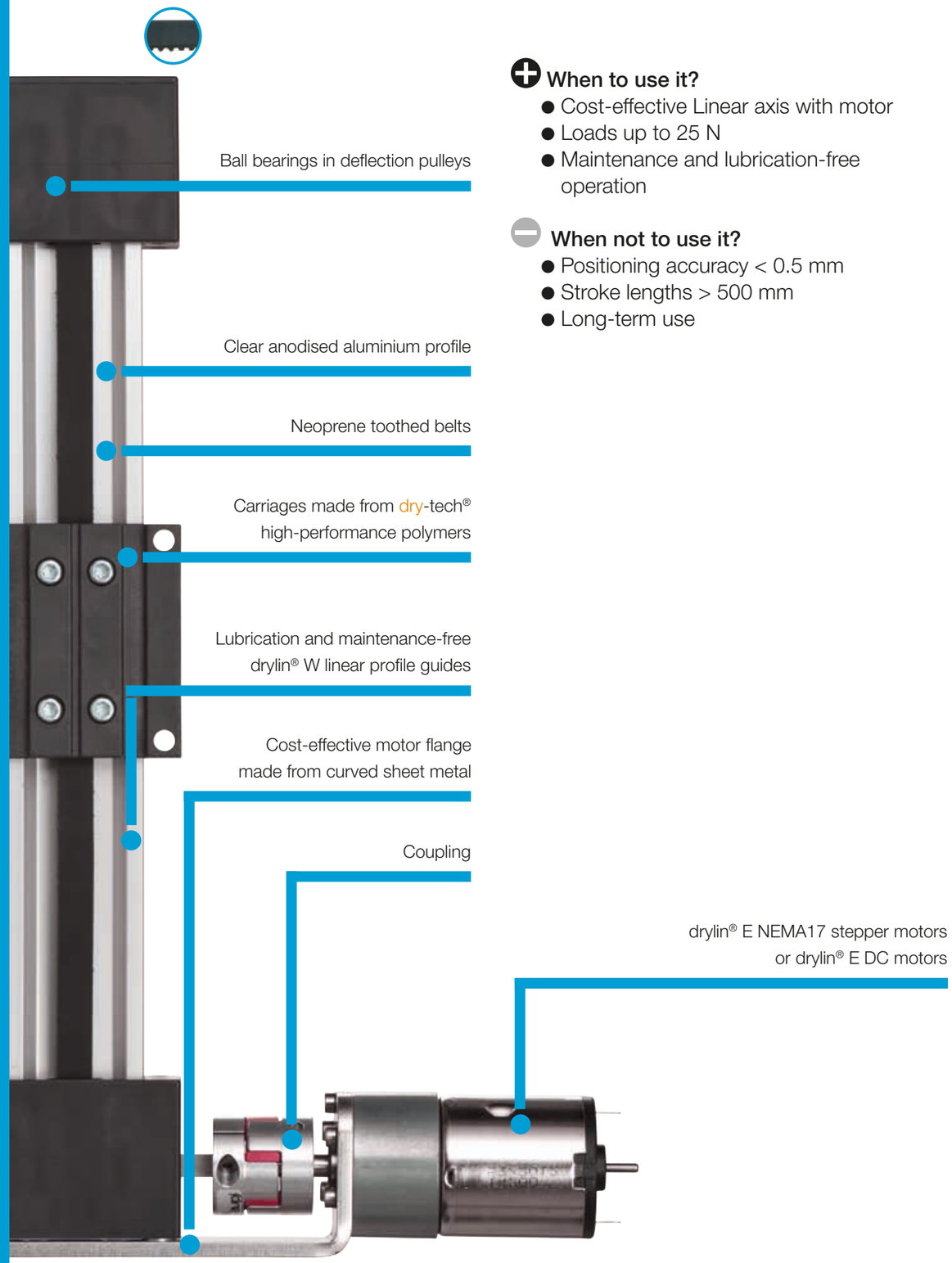

When to use it?

- Cost-effective Linear axis with motor
- Loads up to 25 N
- Maintenance and lubrication-free operation

When not to use it?

- Positioning accuracy < 0.5 mm
- Stroke lengths > 500 mm
- Long-term use

Drawings, dimensions, technical specifications, such as ZLW ▶ Page 1295

drylin® E | Linear axes with motor | ZLW-Eco

drylin® E electrical drive technology

Order key

ZLW-0630-02-E-60-L-750-17-L-S-000

Type
ZLW

Installation size
0630

Type
02: With deep groove ball bearings

Design
E: Type series Eco

Carriage length
60: 60 mm (only ZLW 0630)
100: 100 mm
150: 150 mm
200: 200 mm
250: 250 mm

Drive shaft
L: Left-hand drive shaft
R: Right-hand drive shaft
L/R: Drive both sides

Stroke length
ZLW-0630: max. 1,000 mm

Electrical connection alignment
000: 0° (standard)
090: 90°
180: 180°
270: 270°

Assembly
Drive shaft on one side [135]
S: Motor assembly on defined drive shaft (L or R)
Drive shaft on both sides (L/R) [136]
L: Motor assembly on drive shaft left
R: Motor assembly on drive shaft right

Motor option
L: Stranded wires
M: Metric connectors
C: Encoder
D: Encoder and brake
F: Low profile connector (DC motor)

Motor size
17: NEMA17
DC01: DC motor: 0.1 Nm
DC03: DC motor: 0.3 Nm

[135] **Assembly example, drive shaft on one side (connection alignment 0°):**

S: Motor assembly on defined drive shaft (L or R)

[136] **Assembly example, drive shaft on both sides (connection alignment 0°):**

L: Motor assembly on drive shaft left **R:** Motor assembly on drive shaft right

My sketches

Multi-axis modular linear robots

- Linear robots for vertical applications
- Flat linear robots for predefined surfaces
- Room linear robots for three dimensional applications
- Pre-assembled standard linear robots from stock
- Individual solutions

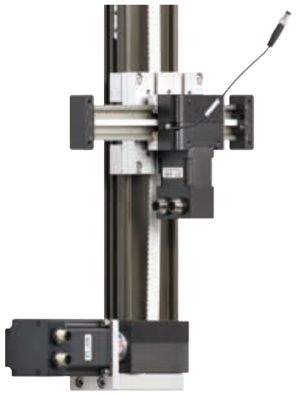

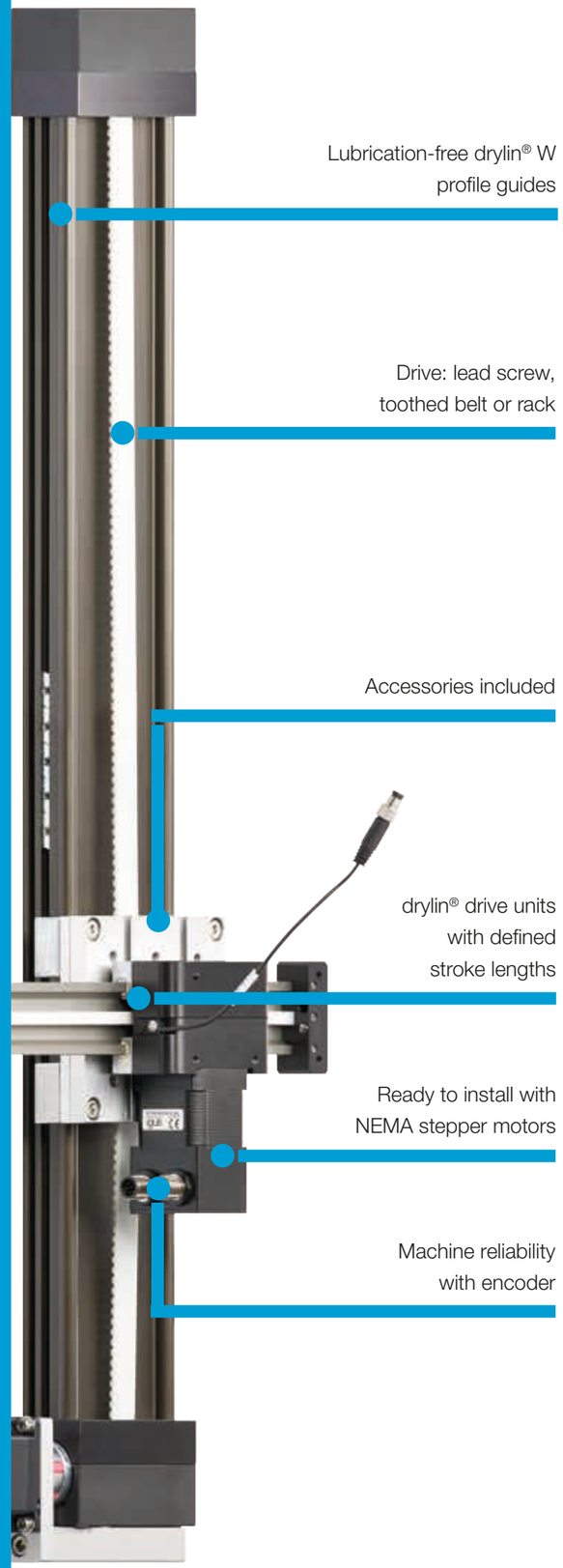

Multi axis modular linear robots

Linear robots combine several linear axes in order to implement a predefined multidimensional movement. Our drylin® linear robots are based on proven tribo technology, i.e. all systems use sliding, self-lubricating linear units, a fact that enables operation without external lubrication over the entire service life. Typical areas of use are pick&place automation, measuring and testing automation, assembly handling, marking and labelling devices, handling tasks in low-cost automation and autonomous assembly cells and everything to do with the topic of "end-of-the-line".

- Maintenance-free, dry operation
- Quiet operation
- Resistance to dust and dirt
- Corrosion-free
- Standard product range available in within 24 h
- Free consultation and installation at your premises

Typical application areas

- Pick and place
- Measurement and testing
- Labelling technology
- Component marking
- Assembly cells
- Sorting machines
- Safety systems

Available from stock
Detailed information about delivery time online.

Block pricing online
No minimum order value. From batch size 1.

Ready-to-install linear robots available from stock in 24hrs

Toolmakers and their suppliers are facing major global challenges. The competition is becoming more intense, the price pressure is becoming greater, as also the demand for local production. We offer complete cost-effective systems that automate tasks in order to produce faster and more effectively.

Linear robot

- Loads up to 2.5 kg
- Precision requirements up to approx. 0.2 mm
- Speeds up to max. 1 m/s

▶ **From page 1344**

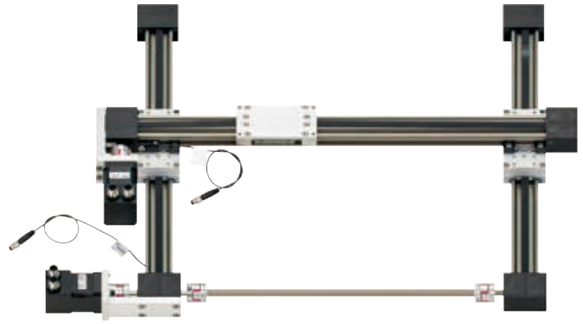

Flat linear robot

- Loads up to 30 kg
- Precision requirements up to approx. 0.5 mm
- Speeds up to max. 1.5 m/s

▶ **From page 1345**

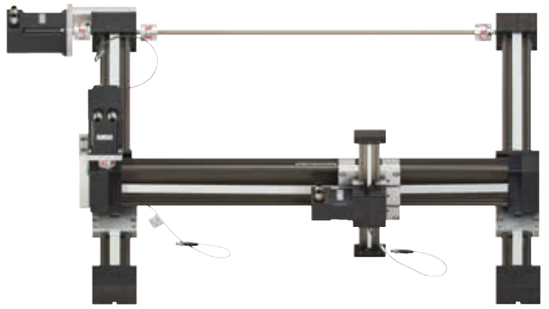

Room linear robot

- Loads up to 2.5 kg
- Precision requirements up to approx. 0.2 mm
- Speeds up to max. 0.5 m/s

▶ **From page 1346**

Customised linear robot solution from batch size 1

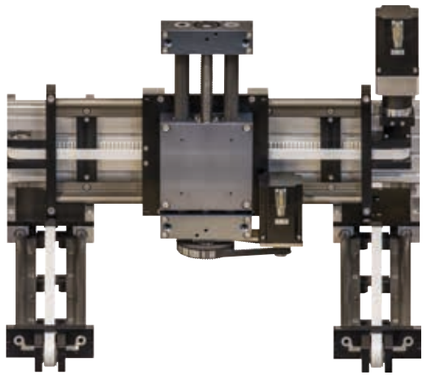

- Ready-to-install solutions, linear units with up to four axes
- Possible axis lengths in the standard version up to 4,000 mm
- Everything from one source
- Completely assembles and 100% tested
- All-round service that does not stop after delivery
- Time saving due to outsourcing of the engineering
- You decide the degree of harnessing
- Consultation and installation at your premises

▶ **Page 1347**

drylin® E | Multi-axis linear robots | Product range

Linear robot – for vertical working planes

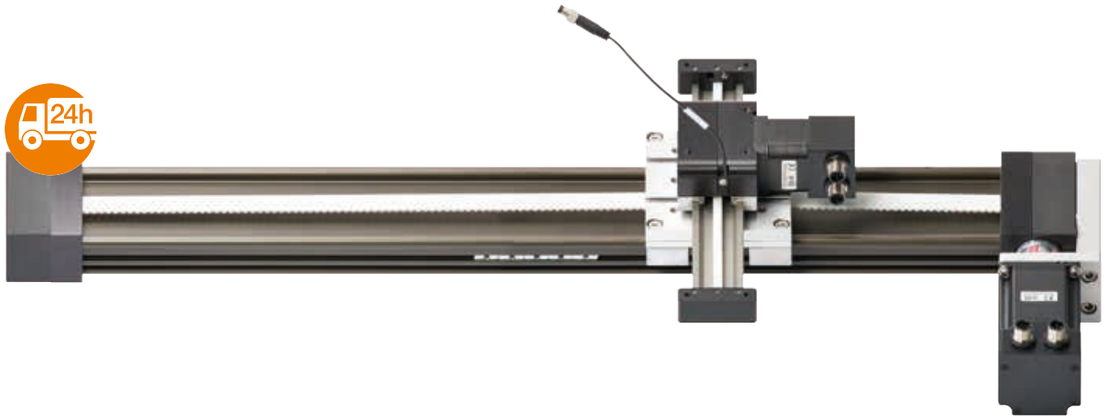

- **X-axis:** drylin® GRW-0630 rack drive with NEMA17 stepper motor with encoder
- **Y-axis**: drylin® ZLW-1080 toothed belt axis with NEMA23 stepper motor with encoder
- Proximity switches available

Technical data

Workspace:	500 x 100 mm
Max. speed:	1.0 m/s
Max. acceleration:	3.0 m/s²
Repeatability:	0.2 mm
Load capacity:	10 N

Part No.
DLE-LG-0001

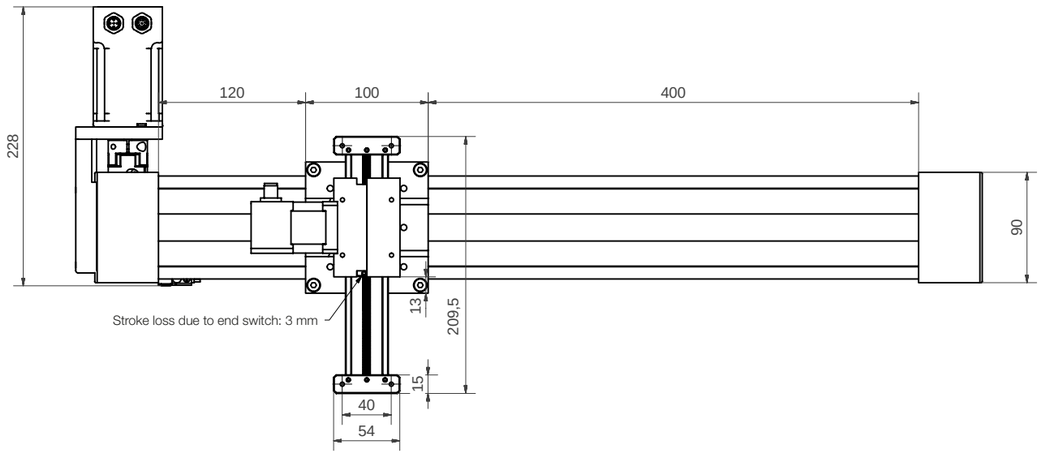

drylin® E electrical drive technology

drylin® E | Multi-axis linear robots | Product range

Flat linear robot – for predefined surfaces

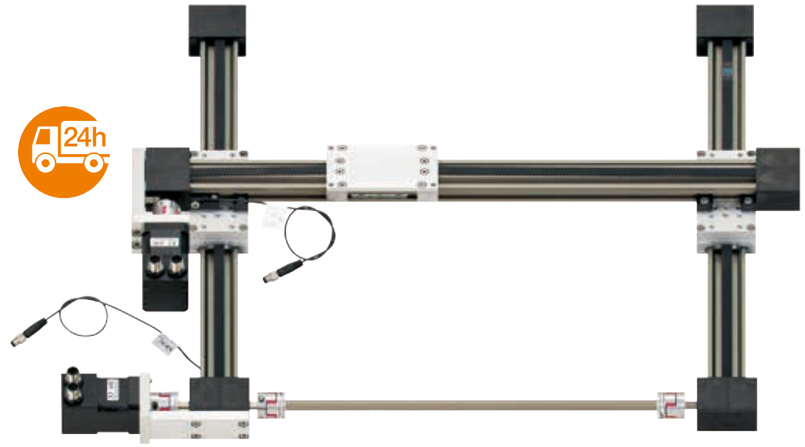

DLE-FG-0001

- **X-axis**: drylin® ZLW-0630 toothed belt axis with NEMA17 stepper motor with encoder
- **Y-axis**: drylin® ZLW-0630 toothed belt axis with NEMA17 stepper motor with encoder
- Proximity switches available

Technical data

Workspace:	300 x 300 mm
Max. speed:	1.5 m/s
Max. acceleration:	10 m/s²
Repeatability:	0.3 mm
Load capacity:	80 N

DLE-FG-0002

- **X-axis:** drylin® ZLW-0630 toothed belt axis with NEMA17 stepper motor with stranded wire
- **Y-axis:** drylin® ZLW-0630 toothed belt axis with NEMA17 stepper motor with stranded wire
- Proximity switches available

Part No.
DLE-FG-0001 version with encoder
DLE-FG-0002 version with wires

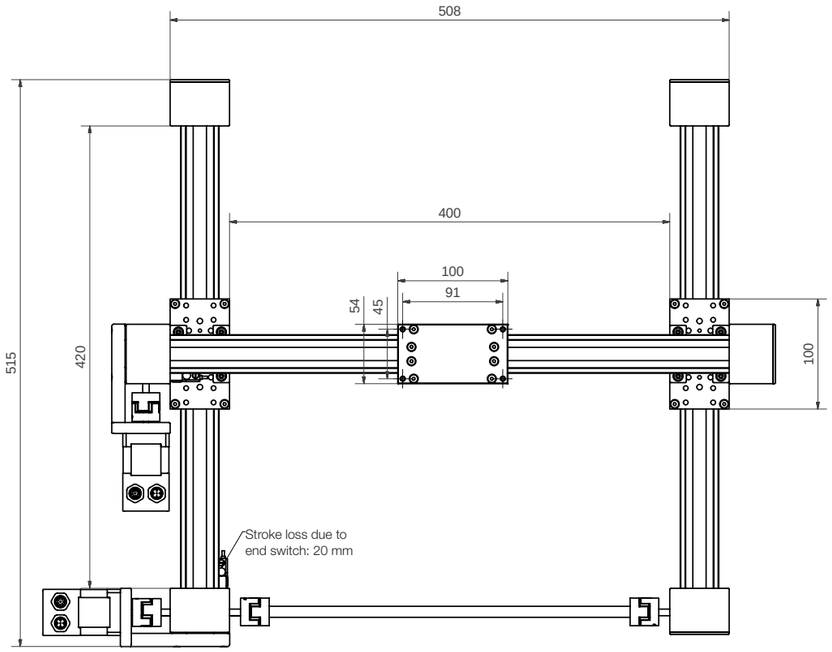

drylin® E | Multi-axis linear robots | Product range

Room linear robot – for three dimensional applications

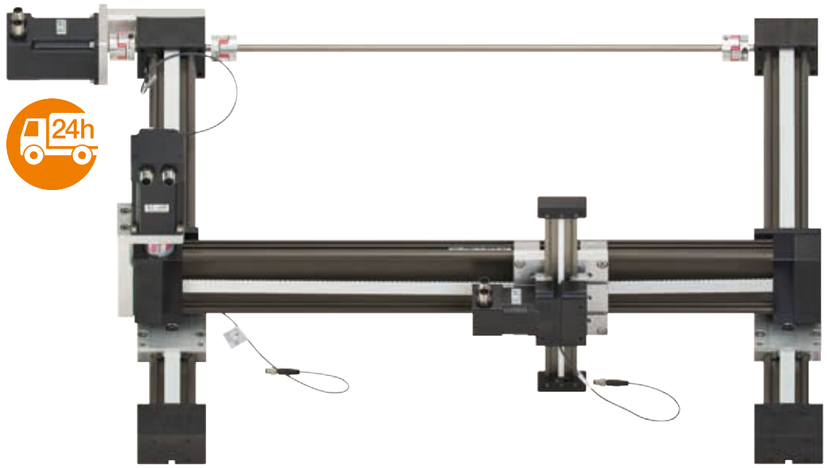

- **X-axis:** drylin® ZLW-1040 toothed belt axis with NEMA23 stepper motor with encoder
- **Y-axis**: drylin® ZLW-1080 toothed belt axis with NEMA23 stepper motor with encoder
- **Z-axis**: drylin® GRW cantilever axis with rack drive and NEMA17 stepper motor with encoder

Technical data

Workspace:	500 x 500 x 100 mm
Max. speed:	0.5 m/s
Max. acceleration:	1.5 m/s²
Repeatability:	0.8 mm
Load capacity:	10 N

Part No.
DLE-RG-0001

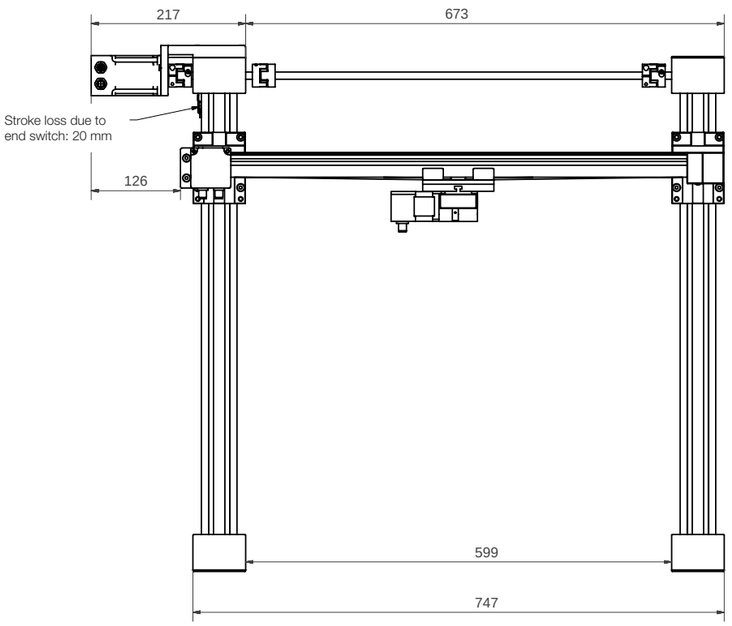

drylin® E | Multi-axis linear robots | Special solutions

Customised drylin® linear robot solutions from batch size 1

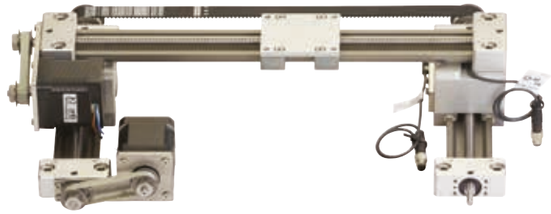

- For small installation spaces: Extremely small and compact
- Cost saving due to parallel synchronisation
- 100% tested
- Installation height from 30 mm
- Repeatabilities up to 0.05 mm

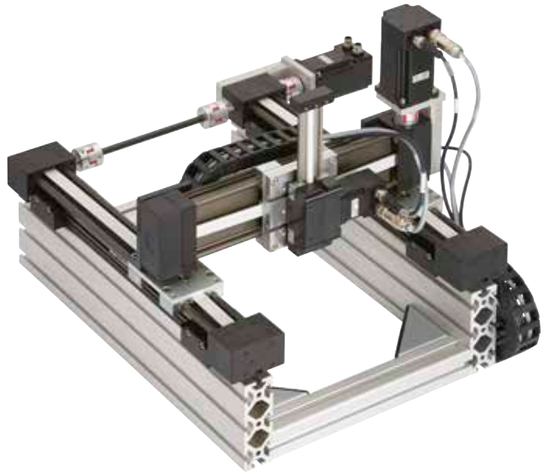

- Outsourcing of engineering costs
- Everything from one source
- Completely ready-to-fit
- Gripper and camera directly adaptable
- Delivery in modules
- Design integration into your machine
- Combination with robolink® joint automation

Submit an enquiry directly online for a robot in accordance with your application and installation parameters

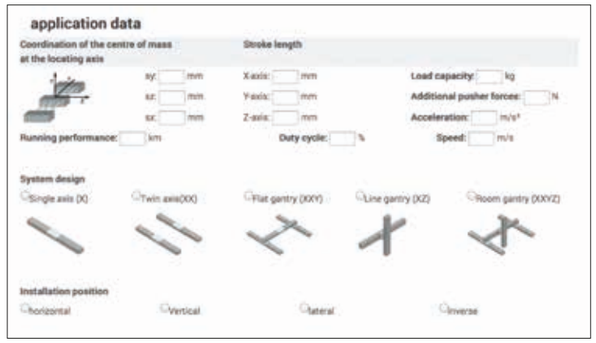

Customised linear robot request
▶ www.igus.eu/gantry-request

Available upon request
Detailed information about delivery time online.

drylin® E | Multi-axis linear robots | Application examples

Lubrication and maintenance-free on all levels

This CNC machine mills styrofoam in particular. This produces a large amount of small particles, which settle in all parts of the machine due to their electrostatic charge. Conventional linear guides and bearings clog with time and cause a high degree of maintenance.

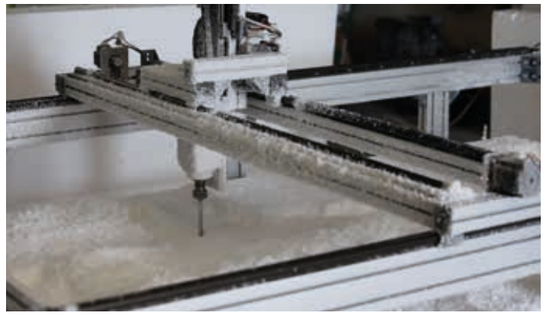

Since the manufacturer uses a lubrication-free drylin® linear guide system from igus® for all axes, the maintenance work is a thing of the past. (MatinMat, Rubén Tortosa Cuesta, Rafaelguaraf, Spain)

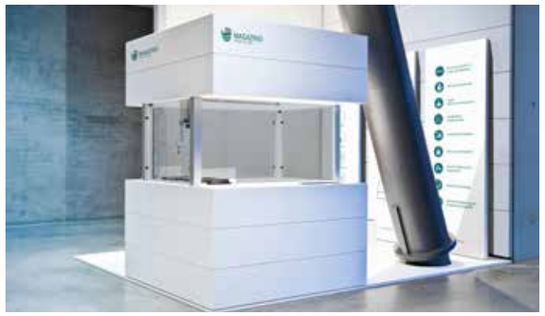

AUTOMATIC ORDER PICKING MACHINES

Magazino, a start-up company in Munich, is developing new ideas for automated order picking. A new kind of pick & place station for small parts can detect, grasp and place packaged items extremely quickly thanks to 3D camera technology and "fast" software.

On the three linear axes of the system, drylin® toothed belt axes are used. With regard to the bearings as well, the Magazino developers are also choosing products from the igus® modular construction kit. (Magazino GmbH)

3D-PRINTING IN THE XXL FORMAT

With the second generation of the "Kamer Maker 2.0", Actual can print larger elements with high precision and greater speed. The igus® gantry system was instrumental in this. In this case, a room gantry is used, in which the x- and y-axis have been implemented with

drylin® toothed belt units and the z-axis with drylin® lead screw / nut systems. Ready to install gantries for one, two and three axes with actuators and sensors for position detection. (Actual)

Highly precise and economic

COCKTAIL MACHINE

Different cocktails can be created with this fully automated cocktail mixer The system is suitable for professional use, e.g. with slices of lime or ice cubes, stirred or shaken. The lubrication-free, easy-to-clean

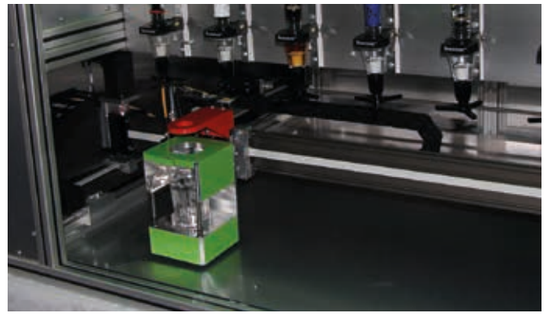

guide system is in the form of a drylin® standard multi-axis room linear robot DLE-RG-001.

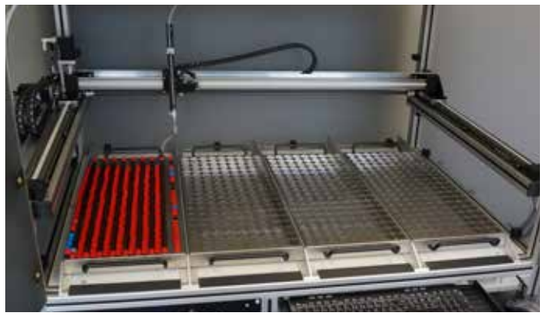

FOOD TECHNOLOGY

Economically efficient automation is an issue that is also assigned very high priority by many laboratories, universities and institutes. What they are usually looking for is an individual one-off system that matches their budget. For example, maintenance-free and lubrication-free linear robots from igus® that can be

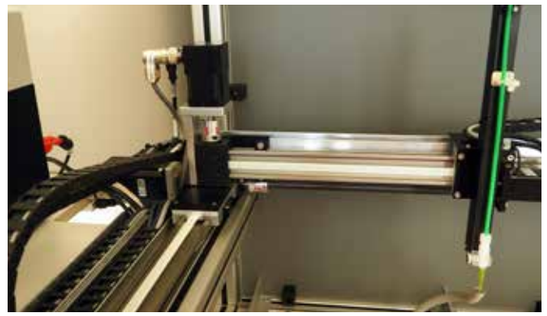

tailored to the respective requirements of design engineers enable the performance of filling tasks involving biochemical liquids. The components for this can be selected from the igus® modular system and then put together. (M2-Automation)

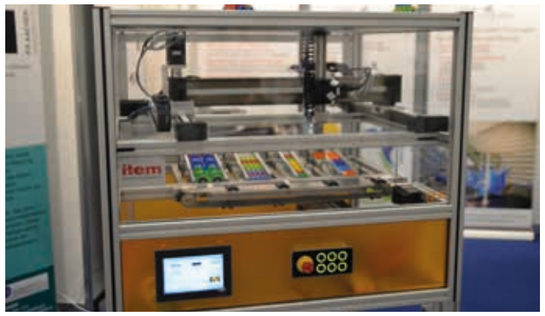

FULLY AUTOMATIC PRODUCTION

The basic idea is to create a fully automatic and flexible manufacturing system from a web shop with real-time feedback regarding the goods in stock. In physical terms, this is accomplished with a drylin®

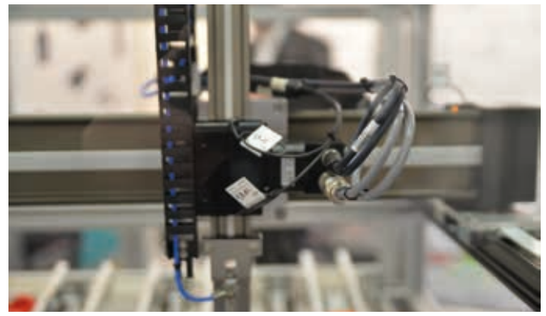

room linear robot, combined with energy chain systems and motors, whereby the appropriate advice and support is given at the same time.
(FH Aachen, University of Applied Sciences)

My sketches

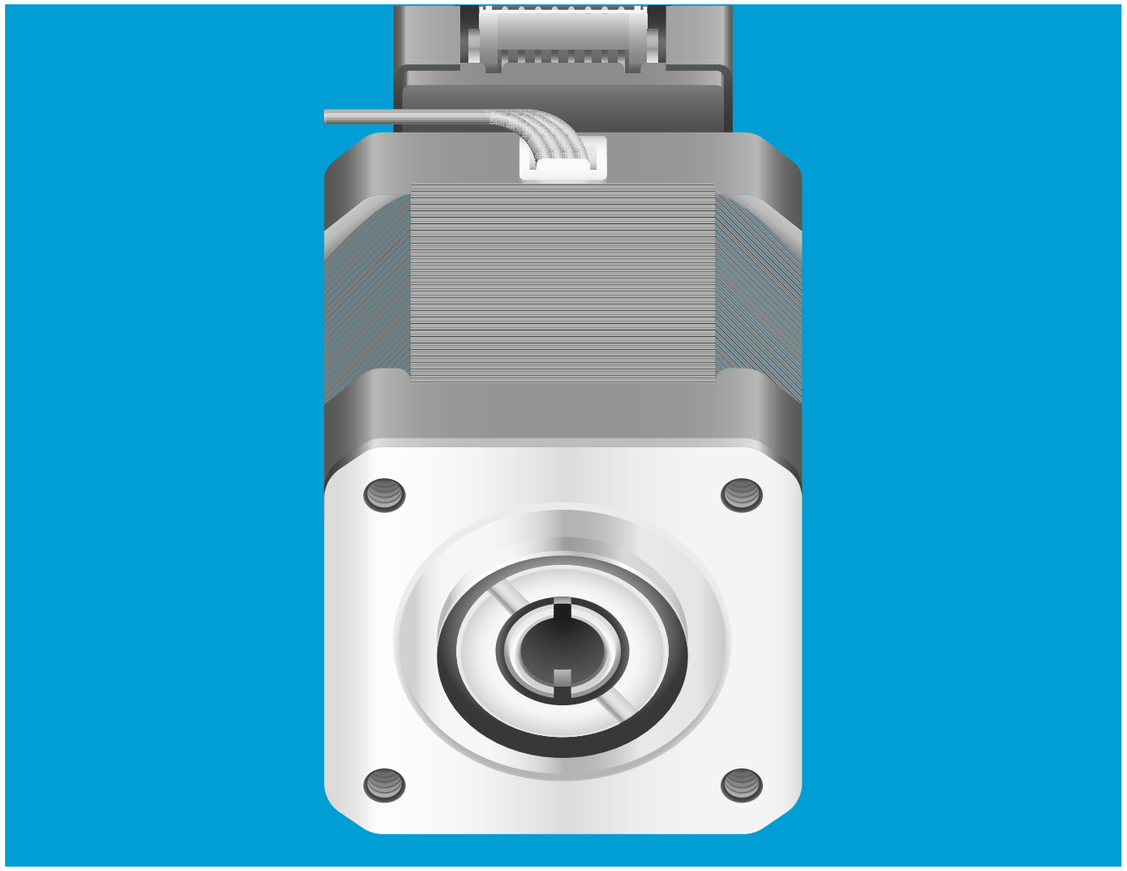

drylin® electric drive technology – drylin® lead screw motors

- 7 lead screw types with pitches from 0.8 - 50 mm
- Maximum precision by centring the lead screw
- The lead screw can be attached on either side
- Space saving, versatile
- Available for delivery ready for connection with drylin® linear units SAWC and SLN

High machine reliability with encoder

NEMA stepper motors with holding torques from 01 to 2.0 Nm

Direct centring via H7/h7 motor/lead screw adjustment

Lead screw can be attached on either side

Durable dryspin® high helix thread or self-locking trapezoidal thread

Lubrication-free drylin® lead screw nut, cylindrical or with flange

Efficient, precise and compact – drylin® lead screw motors

drylin® E with the lead screw motor range is the optimum solution for systems that need a stepper motor with a directly integrated lead screw. The stand-alone versions have a compact design and are available with NEMA stepper motors with and without an encoder. The lead screw is precisely centred and, in combination with the dryspin® high helix thread technology, the system has a long service life.

- 3 stepper motor sizes
- Lubrication-free drylin® lead screw technology
- Can be delivered ready for connection

Typical application areas

- Medical technology
- Tool building
- Laboratory technology

Available from stock

Detailed information about delivery time online.

Block pricing online

No minimum order value. From batch size 1.

Product finder

▶ **www.igus.eu/drylinE-finder**

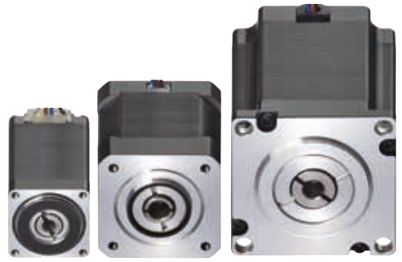

Lead screw motor

- NEMA 11/17/23 stepper motors
- Holding torque 01 - 2.0 Nm
- The lead screw can be attached on either side

▶ **From page 1354**

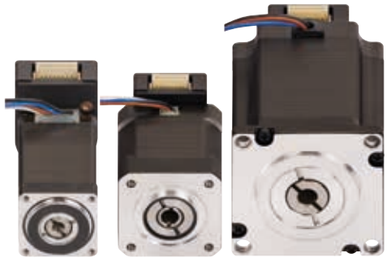

Lead screw motor with encoder

- NEMA 11/17/23 stepper motor
- Increased machine reliability
- Can be used with 7 lead screw pitches from 0.8 - 50 mm

▶ **From page 1354**

drylin® lead screws for stepper motor

- Efficient dryspin® high helix lead screw, ready to install with precision machined ends
- Self-locking trapezoidal thread lead screw, ready to install with precision machined ends
- Available for delivery individually or fully assembled

▶ **From page 1355**

Matching dryspin® high helix lead screw nut

- Available in several geometric designs and pitches

▶ **From page 1128**

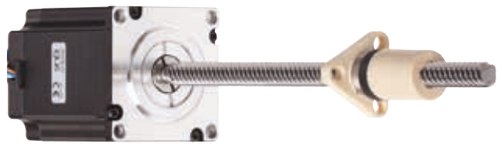

Matching drylin® trapezoidal lead screw nut

- Lubrication-free, self-locking and available in several plastic materials

▶ **From page 1151**

drylin® E lead screw motors installed in

- drylin® SAWC with motor ▶ **From page 1326**
- drylin® SHTC with motor ▶ **From page 1320**
- drylin® SLN with motor ▶ **Page 1332**

drylin® E | Lead screw motors | Product range

Stand-alone solution for customer requirements – with or without encoder

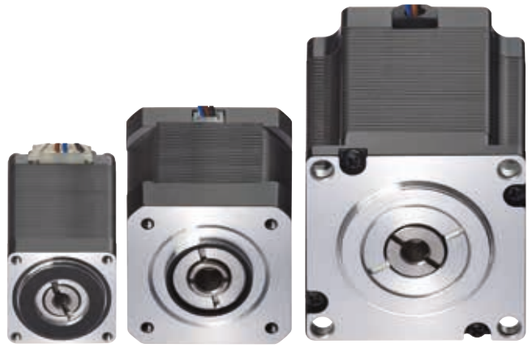

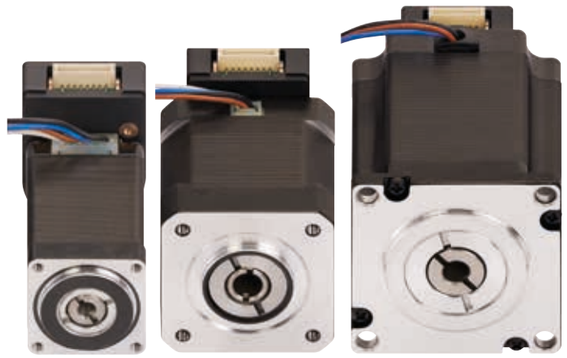

- 3 stepper motor sizes with stranded wire and holding torque 0.1 - 2 Nm
- 7 lead screw types with pitches from 0.8 - 50 mm
- Maximum precision by centring the lead screw with a H7/h7 motor/lead screw fit
- Matching lead screw nuts in the drylin® product range
- When using a stepper motor without an encoder the lead screw can be attached on either side
- Space saving, versatile
- Available for delivery ready for connection with drylin® linear axes SAWC, SLN and SLT

Technical data – stepper motor with stranded wire

Part No.	Motor size	Distance over hubs [mm]	Holding torque [Nm]	Shaft load axial [N]	Encoder
MOT-ST-28-L-A-A	NEMA11	28	0.1	50	no
MOT-ST-42-L-A-A	NEMA17	42	0.5	100	no
MOT-ST-56-L-A-A	NEMA23	56	2.0	500	no
MOT-ST-28-L-C-A	NEMA11	28	0.1	50	yes
MOT-ST-42-L-C-A	NEMA17	42	0.5	100	yes
MOT-ST-56-L-C-A	NEMA23	56	2.0	500	yes

Detailed technical data online
▶ www.igus.eu/drylinE

drylin® E electrical drive technology

drylin® E | Lead screw motors | Product range

Lead screw with precision machined ends

- Material: stainless steel
- Lead screw needs to be secured with an adhesive
- Ready to fit

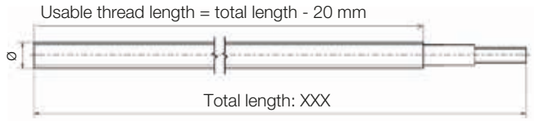

Technical data – high helix threads with dryspin® technology

Part No.	Motor size	Distance over hubs [mm]	Thread type	Lead screw Ø [mm]	Pitch P	Max. length
DST-LS-MOT-6.35X2.54-R-XXX-ES	NEMA11	28	DST	6.35	2.54	300
DST-LS-MOT-6.35X25.4-R-XXX-ES	NEMA11	28	DST	6.35	25.4	300
DST-LS-MOT-10X12-R-XXX-ES	NEMA17/23	42 / 56	DST	10	12	500
DST-LS-MOT-10X25-R-XXX-ES	NEMA17/23	42 / 56	DST	10	25	500
DST-LS-MOT-10X50-R-XXX-ES	NEMA17/23	42 / 56	DST	10	50	500
DST-LS-MOT-14X25-R-XXX-ES	NEMA17/23	42 / 56	DST	14	25	500

Technical data – trapezoidal lead screw

Part No.	Motor size	Distance over hubs [mm]	Thread type	Lead screw Ø [mm]	Pitch P	Max. length
PTGSG-MOT-M5X0.8-R-XXX-ES	NEMA11	28	M5	5	0.8	250
PTGSG-MOT-08X1.5-R-XXX-ES	NEMA17/23	42 / 56	Tr	8	1.5	300
PTGSG-MOT-10X2-R-XXX-ES	NEMA17/23	42 / 56	Tr	10	2	500
PTGSG-MOT-12X3-R-XXX-ES	NEMA17/23	42 / 56	Tr	12	3	500
PTGSG-MOT-12X6P3-R-XXX-ES	NEMA17/23	42 / 56	Tr	12	6P3	500

XXX: Lead screw length

If desired by the factory, please order using the following assembly number:
Assembly front: MONT004F000 (flange side)
Assembly back: MONT004B000 (assembly not possible with a motor with an encoder)

Lead screw needs to be secured with an adhesive (Loctite 648)!

Curing time: after 6 hours approx. 50%
after 24 hours 100%

My sketches

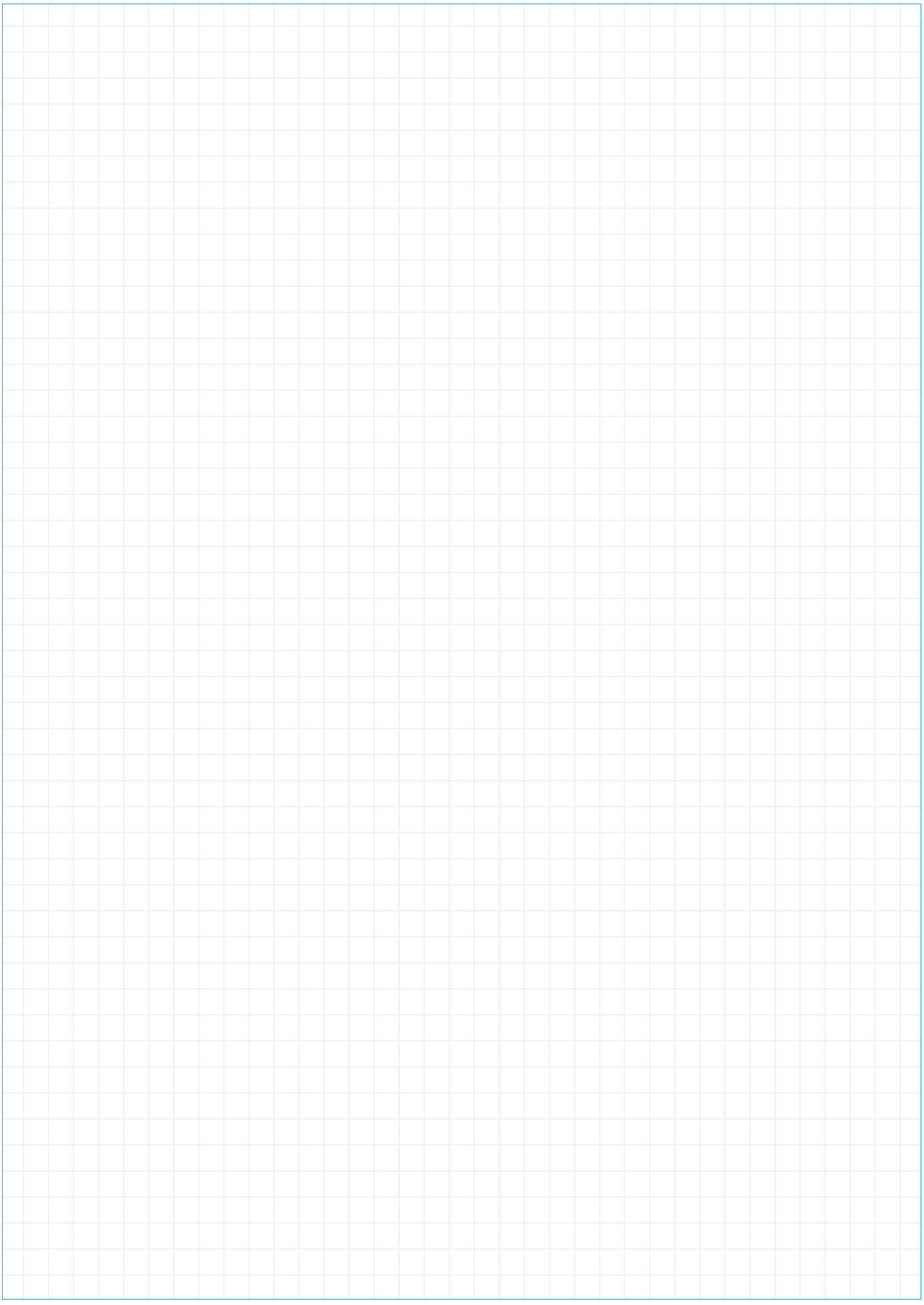

drylin® general drive technology – Accessories

Accessories for manual positioning and format adjustment

Stepper and DC motors for electrical drive

Couplings and motor flanges

Cables and initiators

Assembly and fastening options

Secure, reproduce and turn

Accessories for drylin® drive technology – manual positioning

An extensive list of accessories is available for many drylin® drive units to perform manual adjustments quickly and conveniently. When directly configuring the linear unit with the order, the units are shipped completely assembled. Any subsequent reconfiguration may result in the lead screw having to be exchanged because the lead screw ends may be too short.

- Fast and precise positioning
- Ergonomic operation
- Provides a mechanical brake

Available from stock
Detailed information about delivery time online.

Block pricing online
No minimum order value. From batch size 1.

Manual operation, manual positioning

V-drive
- 360° continuously adjustable
- Fixing of setting angle with clamp
- Small flange saves installation space

▶ Page 1360

Position indicator
- Direct read-out of the carriage position for the lead screw unit
- Bore reducers included to enable fitting to the entire product

▶ Page 1362

Lead screw clamp
- For clamping of the lead screw
- Provides a mechanical brake to the lead screw
- Material: plastic housing with aluminium shaft clamp

▶ Page 1363

Adapter plate
- For manual orientation of position indicators and hand clamps
- Suitable for linear modules of SHT/SLW/SHTP series
- Material: plastic igumid G

▶ Page 1386

Hand wheel
- Rotary knob: defined standard for complete units
- Different outer-diameters available
- Different handles available

▶ Page 1364

Flexshaft
- Optional offset operation of the drylin® linear modules
- Controls can be positioned independently
- Available in length 300, 500 and 1,000 mm
- Can be combined with other accessories

▶ Page 1365

drylin® drive technology | Accessories | Product range

V-drives – flexible adjustable

In addition to safety technology aspects, limited operating space requires drylin® drives to be operated with flexibility and ease. We provide a product line of continuously adjustable angular drives for adjustment options from a defined direction. For manual adjustments, the angular drives can also be configured with position indicator, clamp and hand-wheel, and are shipped pre-assembled. Angular drives with keyed/grooved shafts are available for motor interfaces with increased torque transfers.

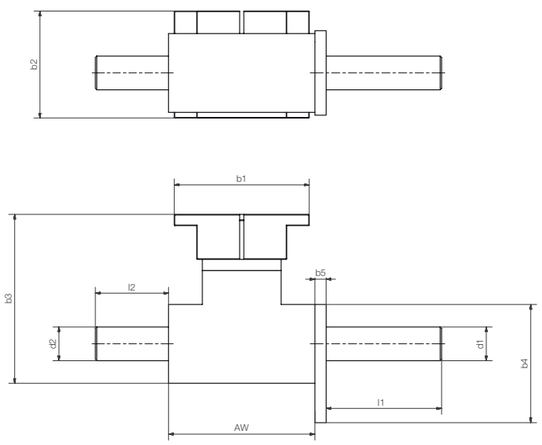

- Double-side shaft output for angle drives WT-3 and WT-4
- For rotary transmissions of 90°
- Configuration with lead screw clamping/position indicator/hand wheel possible
- Position indicator, lead screw clamp, hand wheel available ▶ **Page 1362**

Dimensions [mm]

Part No.	M max. [N]	l [105]	AW	d1	d2	l1	l2	b1	b2	b3	b4	b5
WT-3000-T	3	01:01	52	12	12	26 / 41 / 59 / 74	26	48	38	60	42	4
WT-4000-T	6	01:01	60	14	14	26 / 47 / 65 / 80	26	56	46	83	50	10

[105] Gear ratio

- Flexible adjusting to your installation scenario with continuously variable adjustment (can be oscillated 360°)
- Max. drive torque 3 Nm
- Clamping using set screw
- Ø 12 mm h7 output shaft

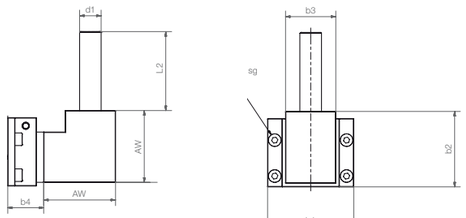

Depending on the design, an adapter plate is used for connection to the linear system

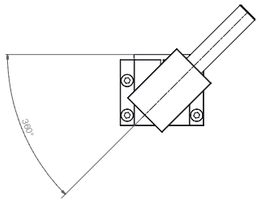

Dimensions [mm]

Part No.	l [105]	AW	b1	b2	b3	b4	L2	d1	sg
WT-3000 | 3100 | 3500	1:1	40	48	42	28	20	26	12	M4
WT-3600 | 3700	1:1	40	48	42	28	30	26	12	M4

[105] Gear ratio

drylin® drive technology | Accessories | Product range

V-drives for heavy duty and hygienic design

drylin® angular drives provide for a maximum of positioning flexibility. The form fitting connection can give a maximum torque of up to 6 Nm.

- Flexible adjusting to your installation scenario with continuously variable adjustment (can be oscillated 360°)
- Max. drive torque 6 Nm through coupling
- Fixed using feather key groove
- Base shaft Ø 14 mm h7 with size
- Compatible with drylin® SHT/SHTC/SLW (sizes 16, 20 and 30)
- Position indicator, lead screw clamp, hand wheel available ▶ **Page 1362**

Dimensions [mm]

Part No.	l [105]	AW	b1	b2	b3	b4	L2	d1	sg
WT-4000 | 4100 | 4200 | 4700	1:1	60	52	51	40	23	26	14	M4
WT-4600	1:1	60	52	51	40	33	26	14	M4

[105] Gear ratio

Angular drive with hand wheel (optional)

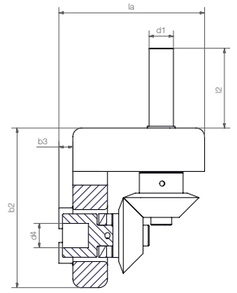

Following the idea of "Hygienic Design" the V-drive is available as maintenance-free and washable stainless steel/polymer system.

- Max. drive torque 3 Nm
- Single parts made from stainless steel
- Easy to clean with water
- Compatible with drylin® SHTC-20-EWM-HYD ▶ **Page 1241**
- Position indicator, lead screw clamp, hand wheel available ▶ **Page 1362**

Dimension [mm]

Part No.	l [105]	la	kt	b1	b2	b3	d4	l2	d1	d2	d3	sg
WT-1100	1:1	84	4.5	65	92	8	12	26	14	25	30	M4

[105] Gear ratio

drylin® drive technology | Accessories | Product range

Position indicator – safe reproducibility

To keep downtime to a minimum and make adjustments quickly and precisely, the indicator is used to create repeatable values. These can be shipped from stock for almost any linear unit in the matching pitch, in the required counting and viewing direction and in a variety of colours.

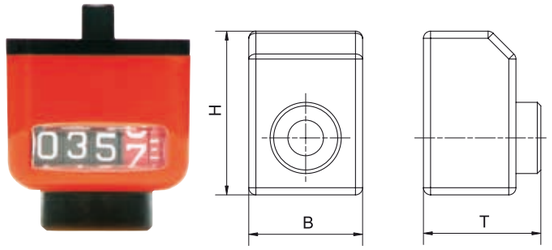

- Plastic analogue indicator for adjustment and direct reading of slide position
- 3- (P1), 4- (P5) or 5- (P6) digit counter (red digit indicates tenths)
- Can be combined with hand clamps and hand wheels
- Reduction sleeves included
- Adapter plate available ▶ **Page 1386**

Order key

SHT-P3-A-2-DX-O

- Housing colour
  - **O:** Orange (Standard)
- Direction of rotation
  - **DX:** clockwise
  - **SX:** anti clockwise
- Pitch
- Display orientation
- Type
- Standard

Installation options

0 degrees | 90 degrees | 180 degrees | 270 degrees

Display orientation

A
Standard

B (optional)
For vertical fitting position: display turned 180°

Dimensions [mm]

Pitch	For lead screw	Display after 1 rotation	Type
1.25	M8x1.25	001.25	P1[103]
1.5	Tr8x1.5	001.5	P1[103]
2	Tr10x2	002.0	P3[103]
3	Tr10x3; Tr12x3	003.0	P3[103]
4	Tr18x4; Tr14x4	004.0	P3[103]
5	Tr24x5	005.0	P3[103]
5	Tr26x5	005.0	P6[103]
6	Tr30x6	006.0	P6[103]
12	10x12	012.0	P3[103]
15	8x15	015.0	P1[103]
50	10x50	005.0	P3[103]
100	18x100	001.0	P3[103]

The pitch depends on the lead screw used.

[103] **P1: 3-digit, P3: 4-digit, P6: 5-digit**

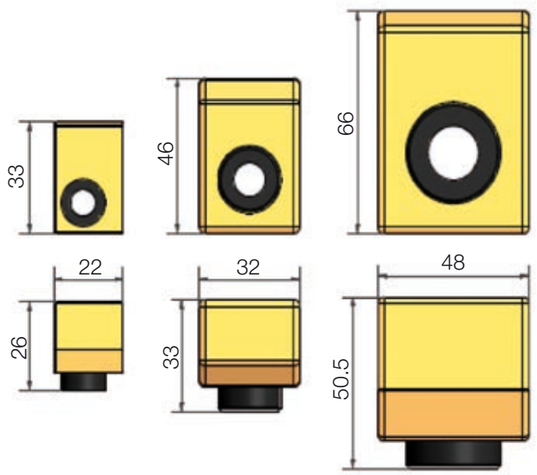

P1
SLW-0630
SHTP-01-06

P3
all other
linear tables

P6
SHTC-40
SHTC-50

drylin® drive technology accessories

drylin® drive technology | Accessories | Product range

Lead screw clamp

Linear modules with trapezoidal threads are equipped with a self locking mechanism. Many applications call for an additional clamping option as an additional safeguard against unintentional movement.

- Shaft clamping flange for attachment to the position indicator and subsequent mounting on the lead screw
- Provides a mechanical brake to the lead screw
- Material: plastic housing with aluminium shaft clamp
- Reduction sleeves for further diameters available

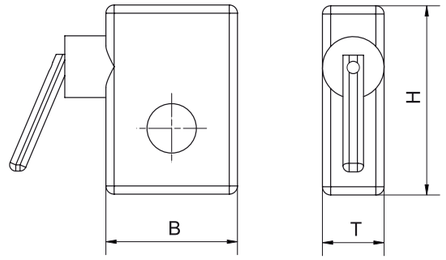

Assembly and positioning with adapter plate
▶ **Page 1386**

Dimensions [mm]

Part No.	SHT-HK-12	SHT-HK-16	SHT-HK-20	SHT-HK-30
Lead screw size	10	14	12	14
Dimensions (B x H x T)	32 x 46 x 15	32 x 46 x 15	32 x 46 x 15	32 x 46 x 15

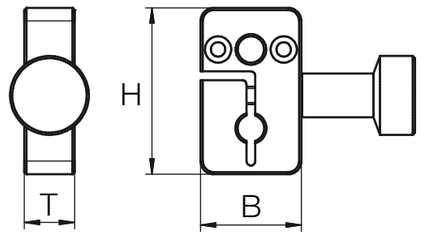

Dimensions [mm]

Part No.	SHT-HK-06	SHT-HK-06,35	SHT-HK-08
Lead screw size	6	6.35	8
Dimensions (B x H x T)	23 x 38 x 11.5	23 x 38 x 11.5	23 x 38 x 11.5

drylin® drive technology | Accessories | Product range

Hand wheels for drylin® linear modules

We have an extensive selection of hand-wheels available to ship from stock for the most varied requirements. These range from small compact sizes up to ø 125 with/without handle, and in various configurations.

Standard

With handle (optional)

- Rotary knob: defined standard for complete units
- Different outer-diameters available
- Different handles available

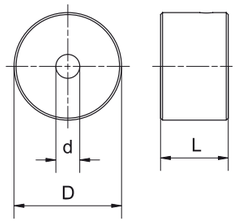

Order key

SHT-HR-8-27-17-OG

- Handle (optional)
  - **OG:** Without handle
  - **FG:** Fixed handle
  - **UG:** Folding handle
  - **SG:** Security handle
- Length
- Outer diameter
- Inner diameter
- Hand wheel
- Standard

Dimensions [mm]

d	D	L	OG	FG	UG	SG[104)]
4	22	15	●			
5	22	15	●			
8	27	17	●	–	–	–
10	27	17	●	–	–	–
12	42	23	●	–	–	–
14	42	23	●	–	–	–
6	50	52	–	●	–	–
8	80	75	–	●	●	●

d	D	L	OG	FG	UG	SG[104)]
10	80	75	–	●	●	●
12	80	75	–	●	●	●
12	125	109	–	●	●	●
14	125	109	–	●	●	●
16	125	109	–	●	●	●
20	198	141	–	●	–	–

[104)] The automatic panning will return on release

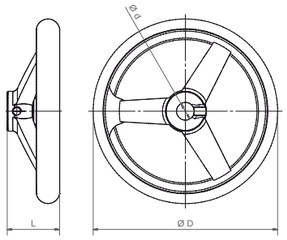

Stainless steel hand wheel

- Washable design for application in food and pharmaceutical industries
- Corrosion resistant stainless steel

Dimension [mm]

Part No.	d	D	L	OG	Weight [g]
SHT-HR-12-125-36-OG-ES	12	125	36	●	625

drylin® drive technology accessories

drylin® drive technology | Accessories | Product range

Flexshaft – separately located control of linear modules

The ideal complement to drylin® linear modules. The flexshaft enables the positioning of the hand wheel independent of the installation position of the linear unit. Distance up to 500 mm and offset by 85°.

- Lengths: 300 mm, 500 mm und 1,000 mm (flexible area)
- Flexible shaft: burnished steel
- Plastic coating: Rilsan
- Connection piece: stainless steel 1.4305
- For all journal diameters (10, 12 and 14 mm)
- Flexible installation
- Space saving
- Can be combined with a bearing block ▶ **1206**
- Position indicator, lead screw clamp, hand wheel available ▶ **Page 1362**

Example of the function of an offset operating unit

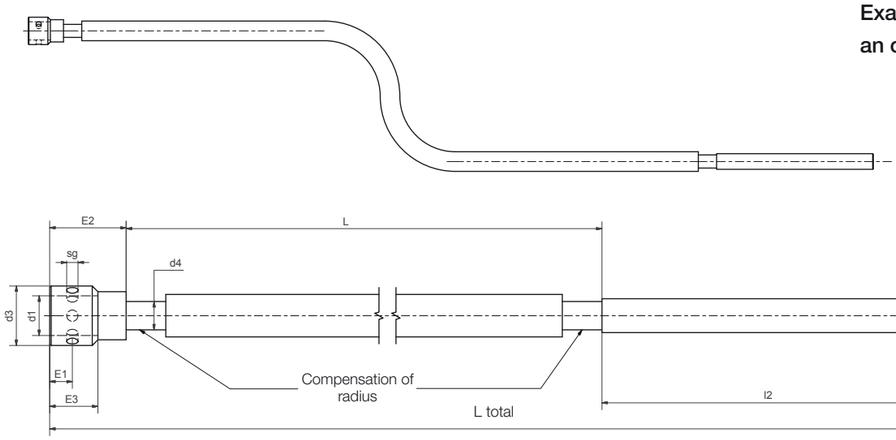

Dimensions [mm]

Part No.	d1	d2	d3	d4	l2	sg	E1	E2	E3	L	L total	L max.	T max. [Nm]	Min.bend radius
FS-06-500-Z12X120-AA	14h7	12h7	21	6	120	M4	8.5	36.5	14.5	500	657	1,000	3	70
FS-08-1000-Z12X120-AA	14h7	12h7	21	8	120	M4	8.5	36.5	14.5	1,000	1,157	1,000	4.5	90

More dimensions on request

Automation from stock

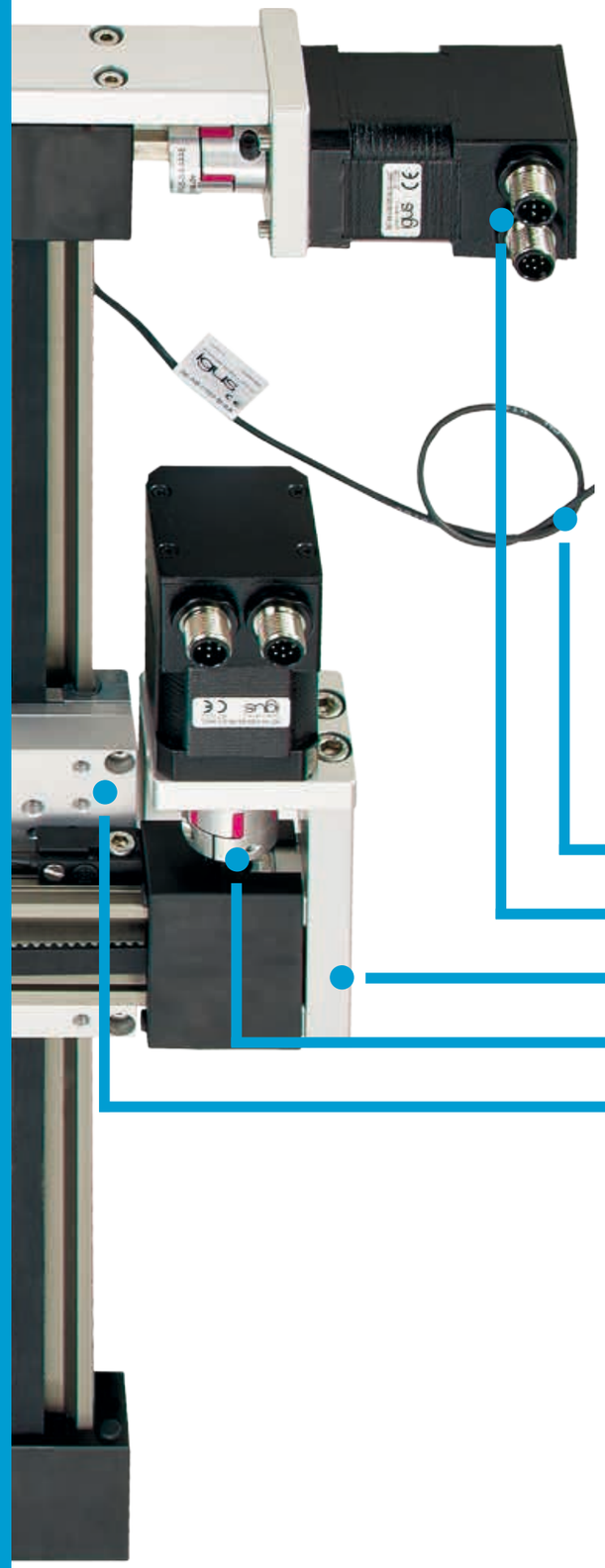

Accessories for drylin® E linear axes

Almost every drylin® linear axis can be retrofitted with a corresponding motor and accessories such as initiators (proximity switches). igus® offers a large modular system of motors, matching couplings and motor flanges plus many practical components for the combination of linear axes as well as fastening material.

- Connection of stepper motors and DC motors
- Linear robot structures
- Fastening options

chainflex® motor and encoder cables

drylin® E stepper and DC motors

Motor flange made of aluminium

Couplings for motor and shaft connection

Adapter plates for linear robot structures

Available from stock
Detailed information about delivery time online.

Electric traversing, manual installation

Stepper motors

- Powerful in 2 sizes
- Motors with connector and stranded wire
- With encoder and brake
- Increased torque resistance due to machined flat motor shaft (D-cut)

▶ **Page 1368**

DC motors

- 3 sizes
- Torque from 0.1-1.8 Nm
- Up to 440 rpm
- Increased torque resistance due to machined flat motor shaft (D-cut)

▶ **Page 1372**

Couplings

- 3 sizes
- Vibration dampening and easy fitting
- Hole diameter 4-25 mm

▶ **Page 1376**

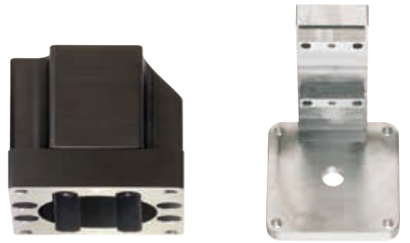

Motor flanges

- Motor connection for drylin® linear axes
- For stepper and DC motors
- Suitable for igus® couplings

▶ **Page 1377**

Cables and initiators

- chainflex® connecting cables with straight or angled connectors
- Proximity switches: Limit and reference switches
- For drylin® linear modules and toothed belt axes

▶ **Page 1379**

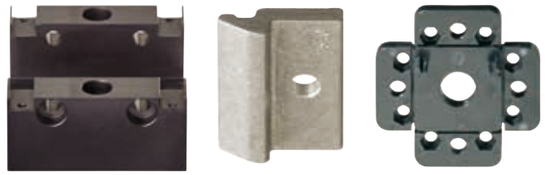

Mounting accessories

- Adapter plates for linear robot structures
- Spacer for height adjustment of SHT/SLW linear modules
- Mounting material

▶ **Page 1380**

drylin® E | Stepper motors | Product overview

Various NEMA stepper motor options

Motor with stranded wires

Motors with stranded wires are the least expensive and the most common stepper motors. The connecting wires (length 30 cm) for this type directly exit from the housing and will be configured with a JST connector. They are usually installed in machines and equipment that have an additional housing or are used in clean environments.

Motor with connector

The connector interface provides a high IP65 protection level (IP: International Protection). The higher the IP rating, the better the motor is protected from the ingress of dirt and water.

Motor with connector and encoder

The encoder (for increased machine reliability) sends signals from the motor to the motor control. The encoder verifies that the required linear motion has occurred precisely.

Motor with connector, encoder and brake

The brake can hold the payload in position when the motor is not under power. This is used as a safety feature during power failures – recommended for vertically mounted systems.

All motors are delivered with a machined flat motor shaft (D-cut) for increased torque resistance.

Installation sizes of NEMA stepper motors

NEMA11: Tiny but with plenty of power

This motor has very compact dimensions. Even so, heavy loads can be moved with the suitable lead screw pitch. This motor is typically used on small test and analysis equipment and miniature adjustments.

NEMA17: Small, but lots of power

This little motor has impressive torque and high RPMs. Reliable operation at fast travel with low loads.

NEMA23: The best known stepper motor size

Versatile choice due to the high torque and rotational speed. This motor is the best choice for most applications with medium loads.

NEMA23XL: The power motor in the medium installation size

A development extension of the typical NEMA23 with nearly twice the torque. The assembly dimensions are identical to the NEMA23, allowing many applications.

NEMA34: The power pack in the large installation size

Applications with higher loads are implemented using the largest installation size. Heavy-duty format adjustments or parallel dual axis setups are among its primary duties.

Technical data

Distance over hubs		28	42	56	60	86
Motor		**NEMA11**	**NEMA17**	**NEMA23**	**NEMA23XL**	**NEMA34**
Connection dimensions	[mm]	28 x 28	42 x 42	56 x 56	60 x 60	86 x 86
Maximum voltage	[VDC]	60	60	60	60	60
Nominal voltage	[VDC]	24-48	24-48	24-48	24-48	24-48
Nominal current	[A]	1.0	1.8	4.2	4.2	6.4
Holding torque	[Nm]	0.13	0.5	2.0	3.5	5.9
Ratchet torque	[Nm]	0.004	0.022	0.068	0.075	0.210
Step angle	[°]	1.8	1.8	1.8	1.8	1.8
Resistance/phase	[Ω]	2.30 ±10%	1.75 ±10%	0.5 ±10%	0.65 ±10%	0.33 ±10%
Inductivity/phase	[mH]	1.40 ±20%	3.30 ±20%	1.90 ±20%	3.20 ±20%	3.00 ±20%
Moment of inertia - rotor	[kgcm²]	0.02	0.08	0.48	0.84	2.70
Shaft load, axial	[N]	7	7	15	15	65
Shaft load, radial	[N]	20	20	52	63	200

Encoder		
Operating voltage	[VDC]	5
Signals/rotation	[rpm]	500
Zero signal/index		Yes
Line driver		RS422 Protocol
Signal shape (Clock-wise motor rotation)	[CW]	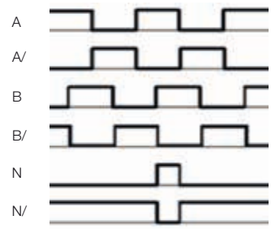

Technical data

Distance over hubs		28 (NEMA11)	42 (NEMA17)	56 (NEMA23)	60 (NEMA23XL)	86 (NEMA34)
Brake						
Operating voltage	[VDC]	-	24 ±10%	24 ±10%	24 ±10%	24 ±10%
Output rating	[W]	-	8	10	10	11
Holding torque	[Nm]	-	0.4	1.0	1.0	2.0
Mass moment of inertia	[kgcm²]	-	0.01	0.02	0.02	0.07

Distance over hubs		28 (NEMA11)	42 (NEMA17)	56 (NEMA23)	60 (NEMA23XL)	86 (NEMA34)
Weights						
Product weight	[kg]	0.25	0.32	1.12	1.56	3.20
With encoder	[kg]	0.27	0.34	1.14	1.58	3.30
With encoder and brake	[kg]	-	0.58	1.36	1.82	3.60

Operating data		
Ambient temperature	[°C]	-10 up to +50
Max. allowable temperature increase	[°C]	80
Insulation class		B
Air humidity (non condensing)	[%]	85
IP rating - motor housing		IP65 (shaft seal IP52, motor with stranded wires IP40)
CE conformity		EVM directive

drylin® E | Stepper motors | Characteristic curves

Characteristic curves

Flange size 28 (NEMA11)

MOT-AN-S-060-001-028-…

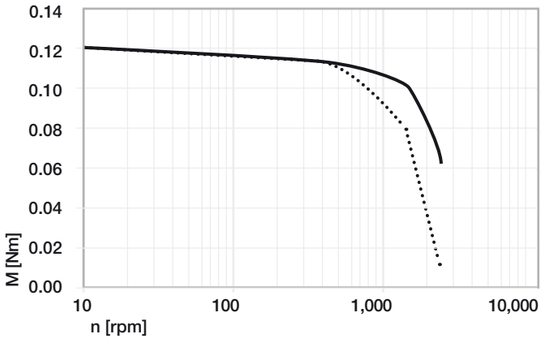

Flange size 42 (NEMA17)

MOT-AN-S-060-005-042-…

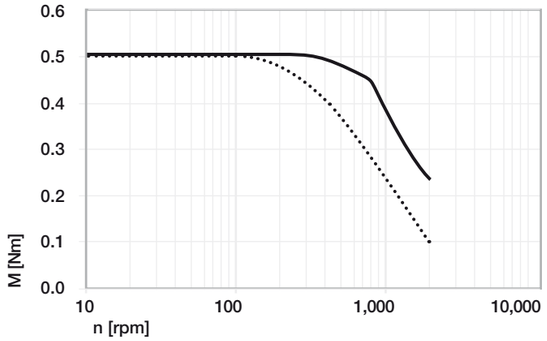

Flange size 56 (NEMA23)

MOT-AN-S-060-020-056-...

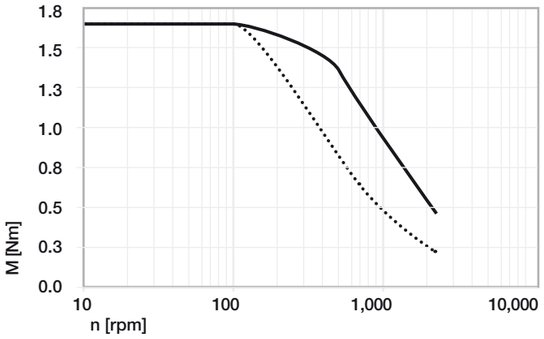

Flange size 60 (NEMA23XL)

MOT-AN-S-060-035-060-…

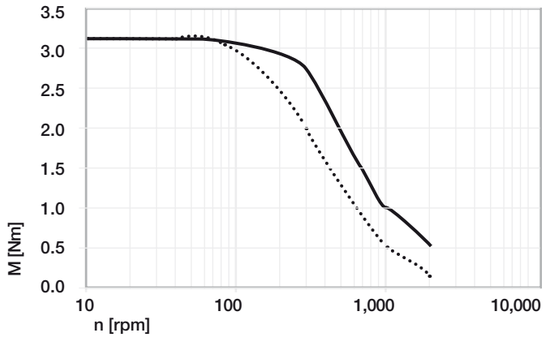

Flange size 86 (NEMA34)

MOT-AN-S-060-059-086-…

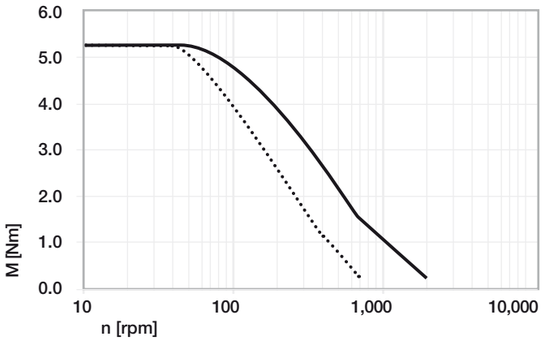

------- 24 VDC —— 48 VDC

The characteristic curves are determined in quarter step mode

drylin® E | Stepper motors | Order key

Order key

MOT-AN-S-060-020-056-M-A-AAAA

Specification
- **AAAA:** Standard
- **AAAC:** Encoder
- **AAAD:** Encoder & brake

Options
- **A:** Without
- **C:** Incremental encoder
- **D:** Incremental encoder & brake

Motor connection
- **M:** Metric connector
- **L:** Stranded wires

Distance over hubs
- **028:** 28 mm (NEMA11)
- **042:** 42 mm (NEMA17)
- **056:** 56 mm (NEMA23)
- **060:** 60 mm (NEMA23XL)
- **086:** 86 mm (NEMA34)

Holding torque
- **001:** 0.1 Nm
- **005:** 0.5 Nm
- **020:** 2.0 Nm
- **035:** 3.5 Nm
- **059:** 5.9 Nm

Maximum voltage
- **060:** 60 V/DC

Motor type
- **S:** Stepper motor

Type
- **AN:** Design

Product type
- **MOT:** Motor

More information ▶ www.igus.eu/drylinE

drylin® E | DC motors | Product range

DC motor with spur gear

This small DC motor can be powered directly from a power source, such as a battery. It reverses direction by changing the polarity. Typical applications are sensor/camera travel and light-duty format adjustments with drylin® lead screw or toothed belt axes.

- Torque [Nm] from 0.1 Nm to 1.5 Nm
- Up to 440 rpm
- Can be operated at 12 & 24 VDC

1. MOT-AE-B-024-001-037-F-A-AAAA
2. MOT-AE-B-024-003-037-F-A-AAAA
3. MOT-AE-B-024-005-036-F-A-AAAA
4. MOT-AE-B-024-007-037-F-A-AAAA
5. MOT-AE-B-024-010-042-F-A-AAAA
6. MOT-AE-B-024-015-037-F-A-AAAA
7. MOT-AE-B-024-018-042-F-A-AAAA

Technical data

Motor		1	2	3	4	5	6	7
Maximum voltage	[VDC]	24	24	24	24	24	24	24
Nominal voltage	[VDC]	24	24	24	24	24	24	24
Nominal current	[A]	0.5	0.5	0.9	0.5	2.3	0.5	2.0
Nominal torque	[Nm]	0.1	0.3	0.5	0.7	1.0	1.5	1.8
Start up torque	[Nm]	0.3	0.5	1.0	1.0	3.0	1.8	6.0
Idling speed	[rpm]	440	146	223	58	290	22	115
Rated speed	[rpm]	350	112	190	47	252	17	101
Shaft load, axial	[N]	6.8	6.8	25	6.8	30	6.8	30
Shaft load, radial	[N]	9.8	9.8	30	9.8	50	9.8	50
Reduction gearing	[N]	10	30	27	75	24	200	61
Product weight								
MOT-AE	[kg]	0.207	0.213	0.450	0.221	0.650	0.270	0.690
MOT-DC	[kg]	0.280	0.280	0.420	0.280	0.580	0.280	0.580
Operating data		MOT-AE | MOT-DC						
Ambient temperature	[°C]	-10 up to +60 | -10 up to +50						
Max. allowable temperature increase	[°C]	60						
Air humidity (non condensing)	[%]	85						
IP rating - motor housing		IP30|IP41	IP30|IP41	IP20|IP41	IP30|IP41	IP20|IP41	IP30|IP41	IP20|IP41
Operating mode		S2 (short-term operation)						
Motor connection low profile connector								
Length	[mm]	6.5	6.5	6.0	6.5	9.0	6.5	9.0
Width	[mm]	4.0	4.0	3.8	4.0	4.8	4.0	4.8
Strength	[mm]	0.4	0.4	0.5	0.4	0.5	0.4	0.5

drylin® E | DC motors | Product range

DC motor with spur gear and "protect" protection housing

Users benefit from protected DC motors in two ways. A motor housing prevents the ingress of particles of any kind. At the same time, the housing contains the appropriate motor connector for easy connection, with protection against occasional contact with water.

- Delivered ready to install with DC motor
- Increased operation reliability
- Quick connection with M12 connector
- For all drylin® E linear axes

1. MOT-DC-37-M-A-A
2. MOT-DC-37-M-A-B
3. MOT-DC-36-M-A-D
4. MOT-DC-37-M-A-D
5. MOT-DC-42-M-A-D
6. MOT-DC-37-M-A-H
7. MOT-DC-42-M-A-F

Technical data ▶ Page 1374

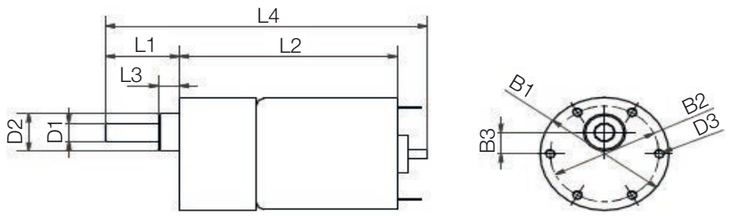

Dimensions [mm]

Part No.	B1 ±0.3	B2 ±0,2	B3 ±0.1	D1 -0.013	D2 ±0.025	D3 Ø	L1 ±1	L2 ±1	L3	L4
MOT-AE-B-024-001-037-F-A-AAAA	37.0	31.0	7.0	6.0	12.0	M3	21.0	59.5	6.0	92.5
MOT-AE-B-024-003-037-F-A-AAAA	37.0	31.0	7.0	6.0	12.0	M3	21.0	62.0	6.0	95.0
MOT-AE-B-024-005-036-F-A-AAAA	36.0	26.0	6.0	6.0	20.0	M3	19.3	85.6	3.0	104.9
MOT-AE-B-024-007-037-F-A-AAAA	37.0	31.0	7.0	6.0	12.0	M3	21.0	64.5	6.0	97.5
MOT-AE-B-024-010-042-F-A-AAAA	42.4	35.0	0	8.0	25.0	M4	22.0	105.2	2.0	127.2
MOT-AE-B-024-015-037-F-A-AAAA	37.0	31.0	7.0	6.0	12.0	M3	21.0	67.0	6.0	100.0
MOT-AE-B-024-018-042-F-A-AAAA	42.4	35.0	0	8.0	25.0	M4	22.0	111.9	2.0	142.4
MOT-DC-37-M-A-A	42.0	31.0	7.0	6.0	12.0	M3	21.0	100.0	6.0	134.0
MOT-DC-37-M-A-B	42.0	31.0	7.0	6.0	12.0	M3	21.0	100.0	6.0	134.0
MOT-DC-36-M-A-D	41.0	26.0	0	6.0	20.0	M3	19.3	126.0	3.0	158.3
MOT-DC-37-M-A-D	42.0	31.0	7.0	6.0	12.0	M3	21.0	100.0	6.0	134.0
MOT-DC-42-M-A-D	47.3	35.0	0	8.0	25.0	M4	22.0	146.0	2.0	181.0
MOT-DC-37-M-A-H	42.0	31.0	7.0	6.0	12.0	M3	21.0	100.0	6.0	134.0
MOT-DC-42-M-A-F	47.3	35.0	0	8.0	25.0	M4	22.0	146.0	2.0	181.0

drylin® E | DC motors | Characteristic curves

Characteristic curves 24 VDC

MOT-AE-B-024-001-037-F-A-AAAA / MOT-DC-37-M-A-A

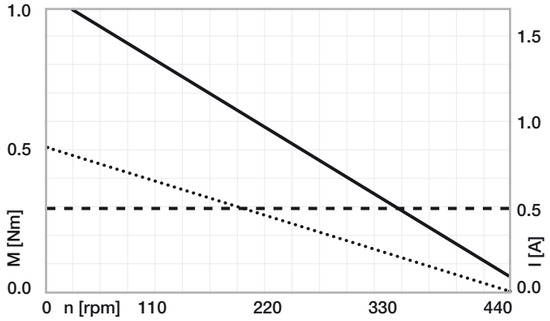

MOT-AE-B-024-003-037-F-A-AAAA / MOT-DC-37-M-A-B

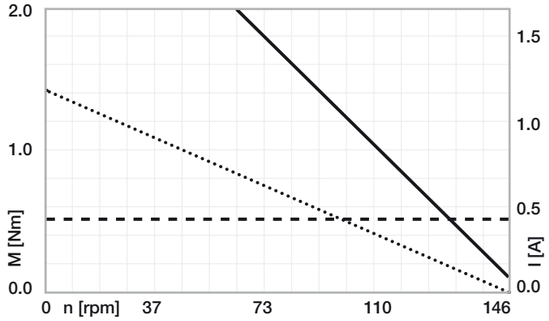

MOT-AE-B-024-005-036-F-A-AAAA / MOT-DC-36-M-A-D

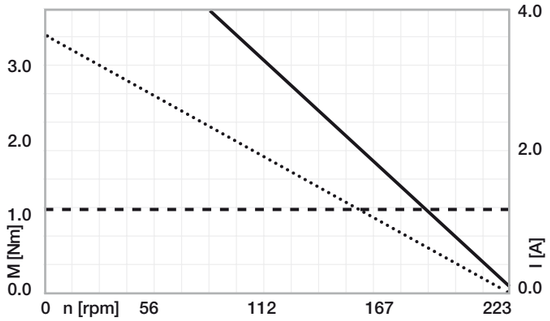

MOT-AE-B-024-007-037-F-A-AAAA / MOT-DC-37-M-A-D

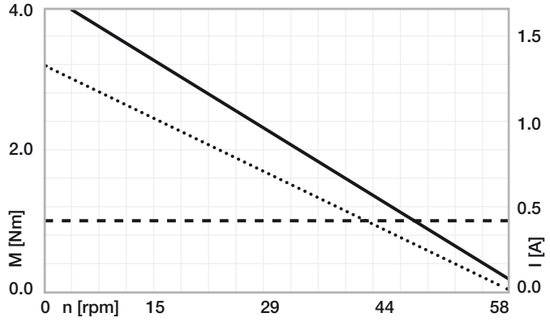

MOT-AE-B-024-010-042-F-A-AAAA / MOT-DC-42-M-A-D

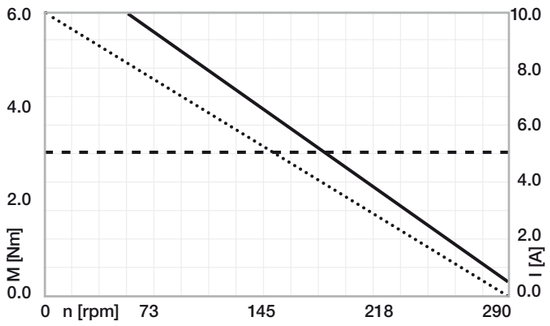

MOT-AE-B-024-015-037-F-A-AAAA / MOT-DC-37-M-A-H

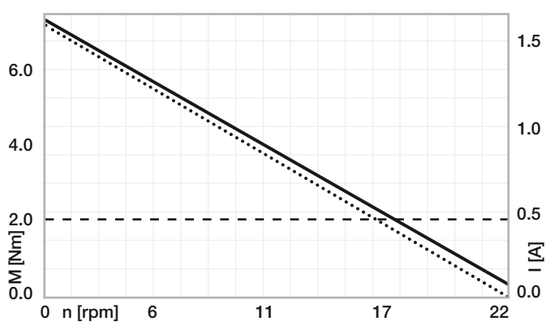

MOT-AE-B-024-018-042-F-A-AAAA / MOT-DC-42-M-A-F

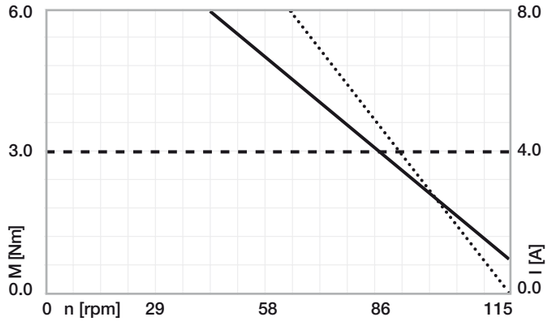

Order key

MOT-AE-B-024-015-037-F-A-AAAA

Product type: Motor	AE: Design	Motor type B: DC-Motor	Operating voltage: 24 VDC	Nominal torque [Nm]	Outer diameter [mm]	F: Low profile connector	Options: A = without	AAAA: Standard

------- Torque ------- Max. continuous torque —— Motor current

drylin® E | DC motors | Characteristic curves

Characteristic curves 12 VDC

MOT-AE-B-024-001-037-F-A-AAAA / MOT-DC-37-M-A-A

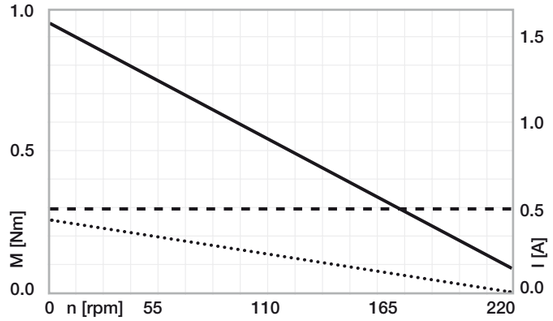

MOT-AE-B-024-003-037-F-A-AAAA / MOT-DC-37-M-A-B

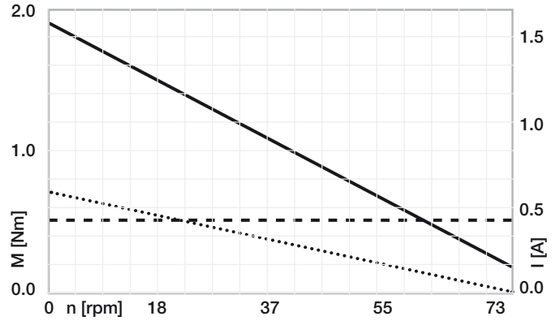

MOT-AE-B-024-005-036-F-A-AAAA / MOT-DC-36-M-A-D

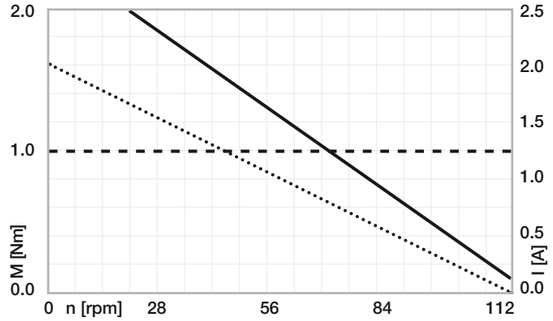

MOT-AE-B-024-007-037-F-A-AAAA / MOT-DC-37-M-A-D

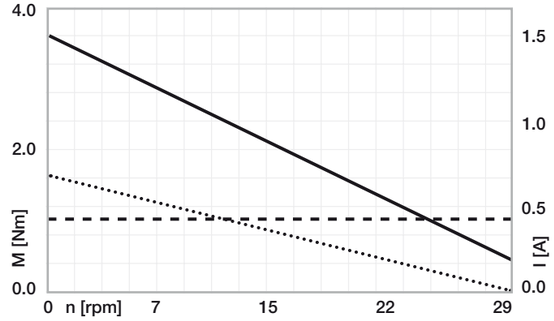

MOT-AE-B-024-010-042-F-A-AAAA / MOT-DC-42-M-A-D

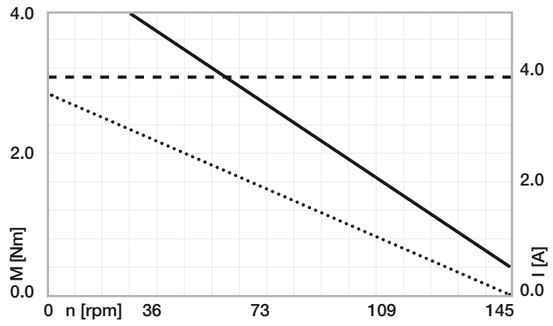

MOT-AE-B-024-015-037-F-A-AAAA / MOT-DC-37-M-A-H

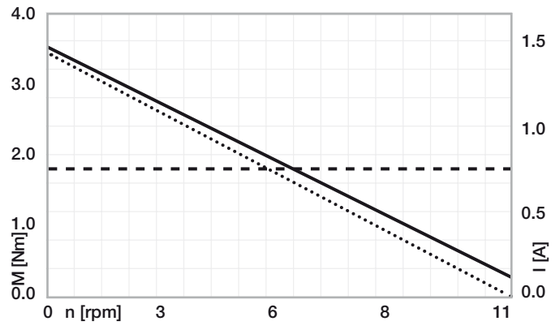

MOT-AE-B-024-018-042-F-A-AAAA / MOT-DC-42-M-A-F

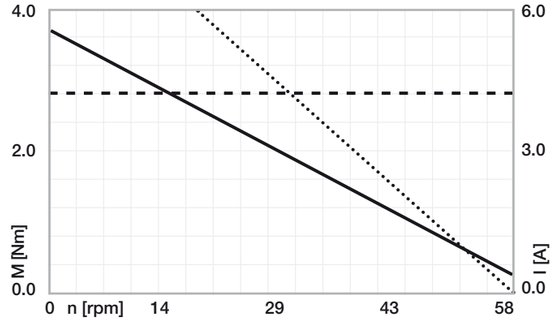

Order key

MOT-DC-36-M-A-D

Product type: Motor	Motor type: DC-motor	Outer diameter [mm]	M: Metric connectors M12	Options: A = without	Rated speed [1/min]

Rated speeds

- **A:** Ø37 = 350
- **B:** Ø37 = 112
- **D:** Ø36 = 190
  Ø37 = 47
  Ø42 = 252
- **F:** Ø42 = 96
- **H:** Ø37 = 17

------- Torque ------- Max. continuous torque —— Motor current

drylin® E | Accessories | Product range

Coupling – vibration dampening and easy fitting

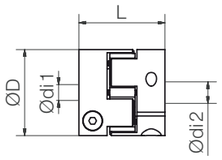

The coupling connects the drive shaft of the axis to the motor. An elastic polymer insert in the centre of the coupling transfers the motor torque. This damping element compensates for radial and axial clearance.

- 20 versions from stock
- Vibration dampening and easy fitting

Coupling material: aluminium. TPU elastomeric centre. Shore hardness: 98 Sh A. Temperature range -30 °C to +100 °C.

Belt drive axis	Motor type	Coupling	Techn. data - coupling D	di1 [mm]	di2 [mm]	L [mm]	Weight [kg]
ZLW-0630-B	NEMA17	COU-AR-K-050-000-25-26-B-AAAB	25.00	5.00	□6.00	26.00	0.02
	NEMA23	COU-AR-K-063-000-25-26-B-AAAB	25.00	6.35	□6.00	26.00	0.02
	DC-Motor31	COU-AR-K-060-000-25-26-B-AAAB	25.00	6.00	□6.00	26.00	0.02
ZLW-0630-S	NEMA17	COU-AR-K-050-080-25-26-B-AAAA	25.00	5.00	8.00	26.00	0.02
	NEMA23	COU-AR-K-063-080-25-26-B-AAAA	25.00	6.35	8.00	26.00	0.02
	DC-Motor31	COU-AR-K-060-080-25-26-B-AAAA	25.00	6.00	8.00	26.00	0.02
ZLW-1040-B / ZAW	NEMA17	COU-AR-K-050-000-25-26-B-AAAB	25.00	5.00	□6.00	26.00	0.02
	NEMA23	COU-AR-K-063-000-25-26-B-AAAB	25.00	6.35	□6.00	26.00	0.02
	NEMA23XL	COU-AR-K-080-000-25-26-B-AAAB	25.00	8.00	□6.00	26.00	0.02
	DC-Motor31	COU-AR-K-060-000-25-26-B-AAAB	25.00	6.00	□6.00	26.00	0.02
ZLW-1040-S / ZAW	NEMA23	COU-AR-K-063-100-32-32-B-AAAA	32.00	6.35	10.00	32.00	0.05
	NEMA23XL	COU-AR-K-080-100-32-32-B-AAAA	32.00	8.00	10.00	32.00	0.05
	NEMA34	COU-AR-K-140-100-32-32-B-AAAA	32.00	14.00	10.00	32.00	0.05
	DC-Motor31	COU-AR-K-060-100-32-32-B-AAAA	32.00	6.00	10.00	32.00	0.05
ZLW-1660-S	NEMA 34	COU-AR-K-140-140-32-32-B-AAAA	32.00	14.00	14.00	32.00	0.05

Lead screw axis	Motor type	Coupling	D	di1 [mm]	di2 [mm]	L [mm]	Weight [kg]
SAW-0630 / SLW-BB-0630	NEMA17	COU-AR-K-050-080-25-26-B-AAAA	25.00	5.00	8.00	26.00	0.02
	DC-Motor31	COU-AR-K-060-080-25-26-B-AAAA	25.00	6.00	8.00	26.00	0.02
SAW-1040 / SLW-(BB)-1040	NEMA17	COU-AR-K-050-100-32-32-B-AAAA	32.00	5.00	10.00	32.00	0.05
	NEMA23	COU-AR-K-063-100-32-32-B-AAAA	32.00	6.35	10.00	32.00	0.05
	NEMA23XL	COU-AR-K-080-100-32-32-B-AAAA	32.00	8.00	10.00	32.00	0.05
	DC-Motor31	COU-AR-K-060-100-32-32-B-AAAA	32.00	6.00	10.00	32.00	0.05
SLW-(BB)-1660	NEMA23	COU-AR-K-063-140-32-32-B-AAAA	32.00	6.35	14.00	32.00	0.05
	NEMA23XL	COU-AR-K-080-140-32-32-B-AAAA	32.00	8.00	14.00	32.00	0.05
SLW-(BB)-2080	NEMA23	COU-AR-K-063-120-32-32-B-AAAA	32.00	6.35	12.00	32.00	0.05
	NEMA23XL	COU-AR-K-080-120-32-32-B-AAAA	32.00	8.00	12.00	32.00	0.05
	NEMA34	COU-AR-K-140-120-32-32-B-AAAA	32.00	14.00	12.00	32.00	0.05
SHT-(BB)-12	NEMA17	COU-AR-K-050-100-32-32-B-AAAA	32.00	5.00	10.00	32.00	0.05
	NEMA23	COU-AR-K-063-100-32-32-B-AAAA	32.00	6.35	10.00	32.00	0.05
	NEMA23XL	COU-AR-K-080-100-32-32-B-AAAA	32.00	8.00	10.00	32.00	0.05
	DC-Motor31	COU-AR-K-060-100-32-32-B-AAAA	32.00	6.00	10.00	32.00	0.05
SHT-(BB)-20	NEMA23	COU-AR-K-063-120-32-32-B-AAAA	32.00	6.35	12.00	32.00	0.05
	NEMA23XL	COU-AR-K-080-120-32-32-B-AAAA	32.00	8.00	12.00	32.00	0.05
	NEMA34	COU-AR-K-140-120-32-32-B-AAAA	32.00	14.00	12.00	32.00	0.05
SHT-(BB)-30	NEMA34	COU-AR-K-140-140-32-32-B-AAAA	32.00	14.00	14.00	32.00	0.05

drylin® E | Accessories | Product range

Motor flange for stepper and DC motors

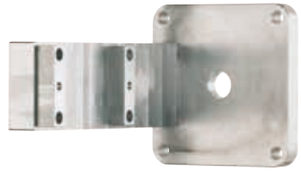

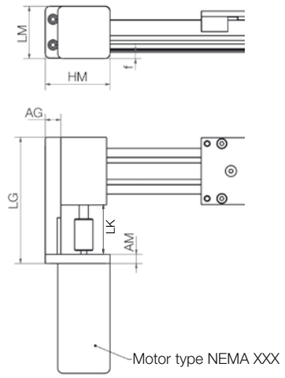

- 2 base plate lengths for each NEMA motor flange; others upon request
- Matches the drylin® coupling ▶ **Page 1376**

Dimensions [mm]

Part No.	Matching linear modules	Base plate AG	LG	LK	AM	Motor flange HM	LM	f
MF-0630-NEMA17-S	ZLW-0630	12	99.5	35.5	10	53	42	7
MF-0630-NEMA23-S	ZLW-0630	12	99.5	35.5	10	59	56	14
MF-1040-NEMA17-S	ZLW-1040	17	119	35	10	63	44	-
MF-1040-NEMA23-S	ZLW-1040	17	119	35	10	70.7	56.4	7
MF-1040-NEMA34-L	ZLW-1040	17	138	54	10	85	85	20.5
MF-1660-NEMA34-S	ZLW-1660	10	166	52	10	86	86	-
MF-2260-NEMA23-S	ZAW-1040	10	108	35	10	70.7	56.4	-
MF-0630-DC0310	ZLW-0630	12	99.5	35.5	10	53	42	7
MF-1040-DC0310	ZLW-1040	17	119	35	10	63	44	-

The motor flange, sometimes called motor enclosure, encloses and protects the coupling and provides the matching mounting dimensions for your NEMA motor.

- Matches the drylin® coupling ▶ **Page 1376**

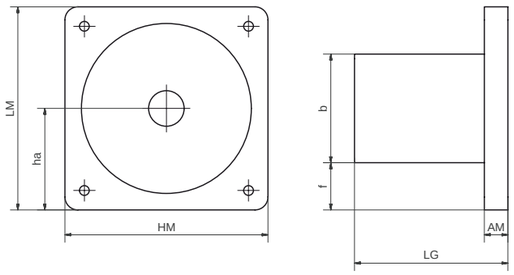

Dimensions [mm]

Part No.	Matching linear modules	LG	AM	HM	LM	b	f	ha
MF-1123-NEMA17	SAW/SLW-BB-0630	45	-	43	43	43	-	21.5
MF-2040-NEMA17	SAW/SLW-1040-AL, SHT-12	47	12	56	56	56	-	21.5
MF-2040-NEMA23-S	SAW/SLW-1040-AL, SHT-12/20	48	13	56	56	56	-	28
MF-3648-NEMA23	SHT-20, SHT-BB-20	56	13	56	56	56	-	28
MF-3648-NEMA34	SLW-1660/2080, SLW-BB-1660/2080	65	10	86	86	46	20	43
MF-3648-NEMA34-XL	SHT-30, SHT-BB-30	76	10	86	86	56	15	43
MF-1123-DC0310	SAW/SLW-BB-0630	45	-	43	43	43	-	21.5
MF-2040-DC0310	SAW/SLW-1040-AL, SHT12	47	12	43	43	43	-	21.5

drylin® E | Accessories | Product range

Connecting cables for NEMA stepper motors

The ideal complement to the drylin® E product range provides chainflex® connecting cables.

- Suitable for energy chains®
- Shielded and oil resistant
- Straight and angled connectors

Flange size 42 (NEMA17), 56 (NEMA23), 60 (NEMA23XL)

Part No.	Jacket	Type	Cable length [m]	Connectors
Motor cable (overmoulded)				
MAT9043737	TPE	CF9-CF.INI	3.0	straight
MAT9043738	TPE	CF9-CF.INI	5.0	straight
MAT9043740	TPE	CF9-CF.INI	10.0	straight
MAT9043742	TPE	CF9-CF.INI	3.0	angled
MAT9043743	TPE	CF9-CF.INI	5.0	angled
MAT9043745	TPE	CF9-CF.INI	10.0	angled
Encoder (harnessed)				
MAT90432594-3	PVC	CF240	3.0	straight
MAT90432594-5	PVC	CF240	5.0	straight
MAT90432594-10	PVC	CF240	10.0	straight
MAT90436430-3	PVC	CF240	3.0	angled
MAT90436430-5	PVC	CF240	5.0	angled
MAT90436430-10	PVC	CF240	10.0	angled

Flange size 86 (NEMA34)

Part No.	Jacket	Type	Cable length [m]	Connectors
Motor cable (overmoulded)				
MAT90439520-3	PUR	CF78.UL	3.0	straight
MAT90439520-5	PUR	CF78.UL	5.0	straight
MAT90439520-10	PUR	CF78.UL	10.0	straight
Encoder (harnessed)				
MAT90439519-3	PVC	CF211	3.0	straight
MAT90439519-5	PVC	CF211	5.0	straight
MAT90439519-10	PVC	CF211	10.0	straight

Flange size 42 (NEMA17), 56 (NEMA23), 60 (NEMA23XL)

Part No.	Jacket	Type	Cable length [m]	Connectors
Brake cable				
MAT9043716	TPE	CF9-CF.INI	3.0	straight
MAT9043717	TPE	CF9-CF.INI	5.0	straight
MAT9043719	TPE	CF9-CF.INI	10.0	straight
MAT9043724	TPE	CF9-CF.INI	3.0	angled
MAT9043725	TPE	CF9-CF.INI	5.0	angled
MAT9043727	TPE	CF9-CF.INI	10.0	angled

drylin® E | Accessories | Product range

Proximity switches – Limit and reference switches

The compact and easy assembly of the proximity switches represent a logical extension of the kit approach for the drylin® E range. The plastic housing makes the proximity switches, which can be used as limit, position or reference switches, particularly light and tough.

Technical data

Proximity switches	Unit	
Operating voltage	[VDC]	10...30
Max. trigger current	[mA]	100
Ambient temperature	[°C]	-25...+70
Trigger distance	[SN]	2.5
Protection class		IP67
Connectors		M8

Pin assignment

Proximity switch	M8 3 pin	Proximity switch cable	
PIN	Signal	PIN	Colour
1	+	1	Brown
3	-	3	blue
4	Load	4	Black

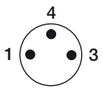

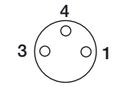

20-30 mm of extra stroke length is needed for each limit reference switch.

Axis	Part No. Proximity switch kit	
	N.C./normally closed	N.O./normally open
SAW-0630	IK-0001	IK-0002
SAW-1040	IK-0001	IK-0002
SAW-1660	IK-0003	IK-0004
SLW-BB-0630	-	-
SLW-BB-1040	IK-0006	IK-0017
SLW-BB-1080	IK-0007	IK-0018
SLW-BB-1660	IK-0008	IK-0019
SLW-BB-2080	IK-0009	IK-0020
SHT-BB-12	IK-0011	IK-0022
SHT-BB-20	IK-0012	IK-0023
SHT-BB-30	-	-
SLW-1040-AL	IK-0006	IK-0017
SLW-1080	IK-0007	IK-0018
SLW-1660	IK-0008	IK-0019
SLW-2080	IK-0009	IK-0020
SHT-12	IK-0011	IK-0022
SHT-20	IK-0012	IK-0023
SHT-30	-	-
ZLW-0630-B	IK-0001	IK-0002
ZLW-0630-S	IK-0001	IK-0002
ZLW-1040-B	IK-0001	IK-0002
ZLW-1040-S	IK-0001	IK-0002
ZAW-1040-B	IK-0001	IK-0002
ZAW-1040-S	IK-0001	IK-0002
ZLW-1660-S	IK-0003	IK-0004

Matching cables are added by including the following attachments:

IK-0010-BG-3

- **Cable length:** 3m, 5m, 10m
- Connector description
- **BG:** straight socket
- Assignment number
- Proximity switch kit

A proximity switch kit for SAW & ZLW includes a proximity switch, a bracket and mounting screws

A proximity switch kit for SLW & SHT includes a proximity switch, two spacers and mounting screws.

drylin® drive technology | Accessories | Product range

Spacer – Height compensation for SLW/SHT linear modules

The spacer is an aluminium standoff that brings the selected drylin® linear unit to a height that matches your NEMA stepper motor. An attachment feature for proximity switches is already integrated. Retro-fitting is also possible.

- Adapter kit contains two spacers for connection of a linear module

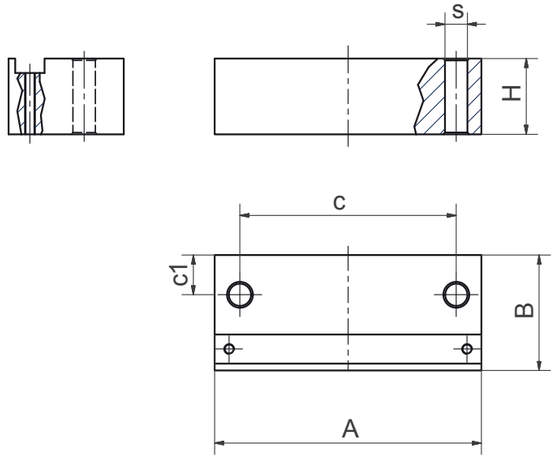

Part No.	Suitable for linear module
AK-0001	SLW-1040
AK-0002	SLW-1080
AK-0003	SLW-1660
AK-0004	SLW-2080
AK-0027	SHT-08
AK-0006	SHT-12
AK-0007	SHT-20
AK-0008	SHT-30
AK-0009	SLW-25120

Dimensions [mm]

Part No.	A	B	H	c ±0.1	c1	Ø s +0.2
AK-0001	74	32.0	21.0	60	11.0	6.2
AK-0002	108	32.0	21.0	94	11.0	6.2
AK-0003	104 -0.2	35.0	24.5	84	12.5	8.1
AK-0004	134	38.0	20.0	126	14.0	9.0
AK-0027	65	25.5	13.0	52	7.75	5.5
AK-0006	85	40.0	17.5	70	15.0	6.2
AK-0007	130	46.0	22.0	108	18.0	10.5
AK-0008	180	60.0	10.0	150 ±0.2	25.0	13.5
AK-0009	200	45.0	16.0	173 ±0.2	17.5	13.5

drylin® drive technology accessories

drylin® drive technology | Accessories | Product range

Mounting bracket for SAW linear modules and ZLW toothed belt axes

For the assembly of drylin® ZLW toothed belt axes

- Available for drylin® WSX / SAW(C) / ZLW Sizes 0630/1040/1080/1660
- Material: anodised aluminium
- Connection options: T-slots profile, linear axis/ initiators
- Freely positionable
- Quick assembly without bores

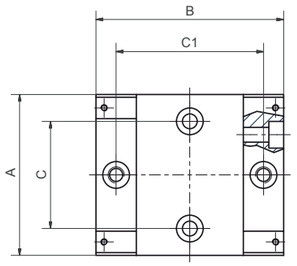

Part No.	Rail profile	Suitable for Linear module	Belt drive axis
ZSY-063009	WSX-06-30	SAW(C)-0630	ZLW-0630
ZSY-104024	WSX-10-40	SAW(C)-1040	ZLW-1040
ZSY-108005	WSX-10-80	SAW-1080	ZLW-1080
ZSY-166010	WSX-16-60	SAW-1660	ZLW-1660

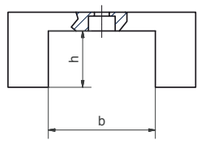

Dimensions [mm]

Part No.	A	B	H	h	b	C	C1	s	s1	s2
ZSY-063009	60	70	20	12	30	40	50	M6	Ø10	5.5
ZSY-104024	60	70	28	21	40	40	55	M6	Ø10	5.5
ZSY-108005	60	104	28	21	74	40	90	M6	Ø10	5.5
ZSY-166010	60	98	47	37	62	40	80	M8	Ø11	27

drylin® drive technology | Accessories | Product range

Adapter kit for linear robot setup

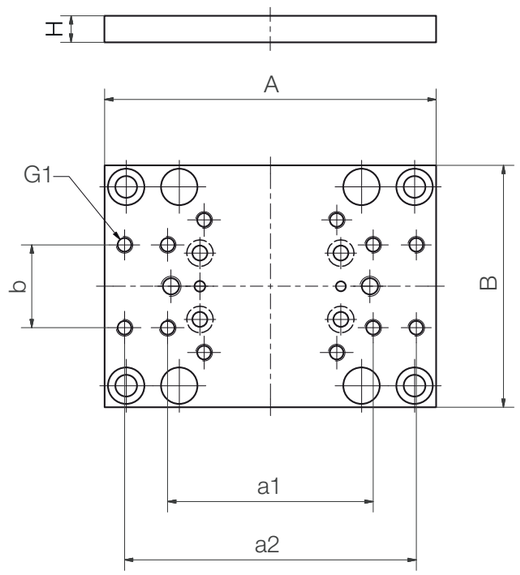

- Simple and fast multi-axes linear robot setup
- For lead screw and toothed belt axes
- energy chain® assembly preparation
- Anodised aluminium
- Space and weight reducing
- Mounting of y-axis on 2 x-axes

Mounting of y-axis on two x-axes

Part No.	x-axis	y-axis	Function linear robot setup
AK-0011	ZLW-0630, 100 mm carriage	ZLW-0630, ZLW-1040	Assembly Y axis
AK-0012	ZLW-1040, 100 mm carriage	ZLW-0630, ZLW-1040	Assembly Y axis
AK-0013	ZLW-1040, 150 mm carriage	ZLW-0630, ZLW-1040, ZLW-1080	Assembly Y axis
AK-0014	ZLW-1660, 250 mm carriage	ZLW-1040, ZLW-1080	Assembly Y axis
AK-0024	ZLW-1040, 200 mm carriage	ZLW-0630, ZLW-1040, ZLW-1080	Assembly Y axis
AK-0025	ZLW-1080, 150 mm carriage	ZLW-0630, ZLW-1040, GRW-0630	Assembly Y axis

Dimensions [mm]

Part No.	A -0.3	B -0.3	G1	H	a1	a2 +0.2	b
AK-0011	100	54	M5	13	62	88	25
AK-0012	100	73	M5	8	62	88	25
AK-0013	150	73	M5	8	112	138	25
AK-0014	250	104	M5	10	-	232	35
AK-0024	200	73	M5	8	162	188	25
AK-0025	150	107	M5	8	112	138	25

drylin® drive technology | Accessories | Product range

T-groove plates

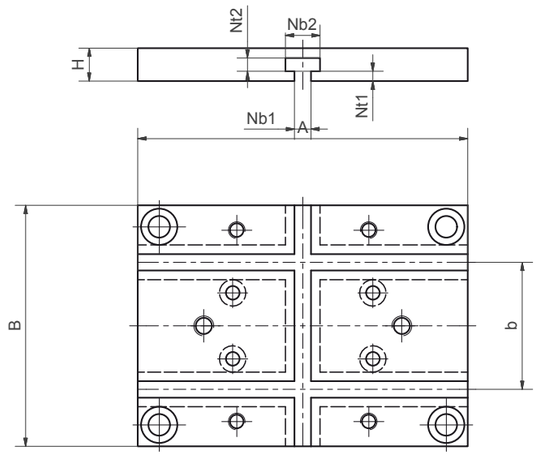

- Anodised aluminium
- Various fixing options
- Can be retrofitted
- For XY linear robot structures
- Suitable igus® slot nuts available ▶ **Page 1384**

Variable T-slot mounting plates

Part No.	Base axis	Axis to be mounted
AK-0021	SAW-1080, 100 mm carriage	ZLW/SAW-0630, ZLW/SAW-1040, GRW-0630
AK-0022	SAW-1040, 100 mm carriage	ZLW/SAW-0630, ZLW/SAW-1040, GRW-0630
AK-0023	SAW-1660, 150 mm carriage	ZLW/SAW-1040, ZLW/SAW-1080, ZLW/SAW-1660

Dimensions [mm]

Part No.	A -0.3	B -0.3	H	b	Nb1 +0.2	Nb2	Nt1	Nt2 +0.2
AK-0021	100	107	10	42.5	5	10.5	3	4
AK-0022	100	73	10	38.5	5	10.5	3	4
AK-0023	150	104	10	42.5	5	10.5	3	4

drylin® drive technology | Accessories | Product range

Slot nuts for mounting

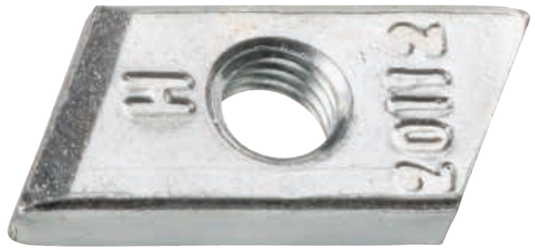

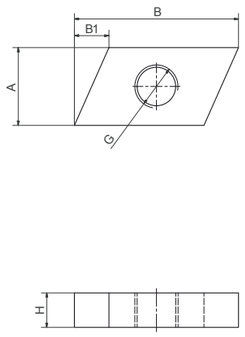

NOR-20602

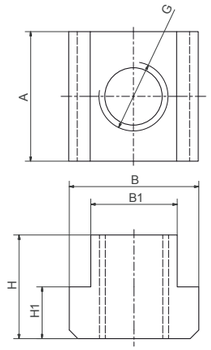

NOR-20605

For the drylin® W high-profile rail, slot nuts offer variable ways of fastening sensors and initiators, for example. The robust profile rail is the basis of SAW linear modules as well as ZLW toothed belt axes and has up to 5 T-slots for mounting slot nuts. Moreover, slot nuts are used as a fastening option in the case of drylin® Q linear carriages. Roll-in slot nuts are available for retrofitting in closed T-slots.

- Variable positionable
- Ideal for drylin® E limit and reference switches
- Suitable for T-slots of the drylin® WSX high-profile rail
- Secure retention
- Can be retrofitted

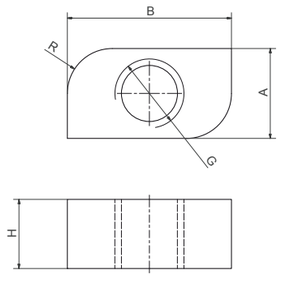

NOR-20613

Part No.	Suitable for rail profile	Suitable for linear module
NOR-20602	WSX-06-30	SAW-0630, SAWC-0630, ZLW-0630
NOR-20602	WSX-10-40	SAW-1040, SAWC-1040, ZLW-1040
NOR-20602	WSX-10-80	SAW-1080, ZLW-1080
NOR-20602	AWMQ-12/20	QWE-01-12, QWE-01-20
NOR-20602	WSX-16-60	SAW-1660, ZLW-1660 (side slots)
NOR-20605	WSX-16-60	SAW-1660, ZLW-1660 (bottom slot)

Dimensions [mm]

Part No.	A	B	B1	H	H1	G	R
NOR-20602	9	19	4	4	-	M5	-
NOR-20605	15	15	10	12	6	M8	-
NOR-20613 [132)]	5.2	9.5	-	4	-	M4	2.5

[132)] **Optionally available: roll-in slot nut for retrofitting**

drylin® drive technology accessories

drylin® drive technology | Accessories | Product range

Clamps for linear modules and toothed belt axes

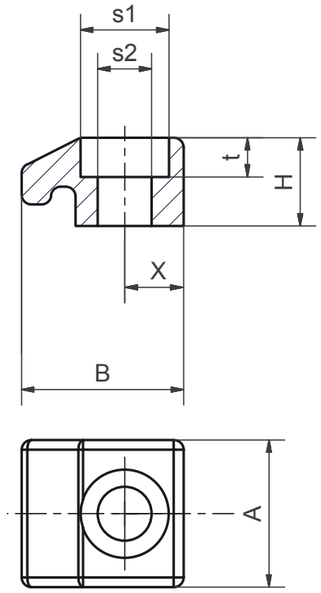

Fixing clamps offer an easy fastening potential of the drylin® linear axes on aluminium profiles. Designed for the drylin® W high-profile rail, the clamps can be inserted into the slots of the rail and used to fix the axis in place.

- Secure mounting
- Variable positionable
- For drylin® SAW linear modules and ZLW toothed belt axes
- For drylin® WSX high-profile rails

Part No.	Suitable for toothed belt axis
ZTZ-063006	ZLW-0630
75.40 ZLW	ZLW-1040
75.40 ZLW	ZLW-1080
75.50 ZLW	ZLW-1660

Dimensions [mm]

Part No.	B	A	H	X	s1	s2	t
ZTZ-063006	16.5	15	9	6	9	5.5	4
75.40 ZLW	27.65	40	8.7	8.6	-	6.4	-
75.50 ZLW	37.25	40	14.4	11	-	9	-

drylin® drive technology | Accessories | Product range

Adapter plate – variable arrangement of accessories

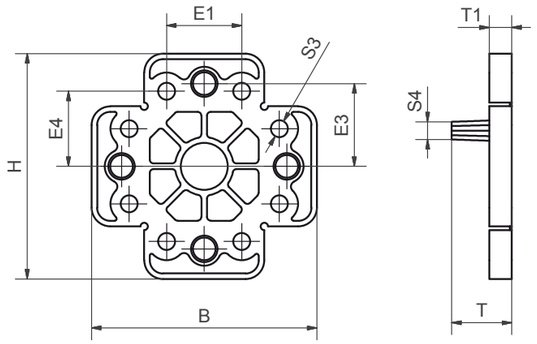

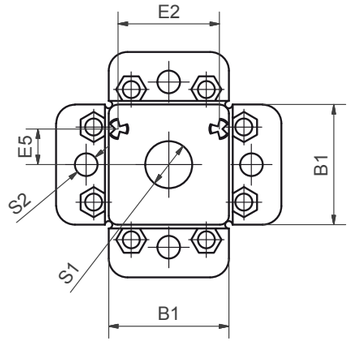

- Adapter plate for manual orientation of position indicators and hand clamps
- Suitable for drylin® linear modules of SLW/SHT/SHTP series
- Material: plastic

Installation note: not used sections can be easily separated.

Part No.	Suitable for linear module
STZ-063008	SLW-0630/SHTP-06
STZ-104001	SLW-1040/SHT-12 SHT-20,SHTP-01/02-12
STZ-166001	SLW-1660
STZ-208001	SLW-2080
STZ-302403	SHT-30

Dimensions [mm]

Part No.	H	B	B1	T	T1	E1	E2	E3	E4	E5	S1	S2	S3	S4
STZ-063008	48	48	18	8	5	-	14.4/11[106)]	18	-	7.2/5.5	8.5	6	-	ø1.5
STZ-104001	60	60	32	16	6	20	27	22	20	9.5	12.5	6	4.5	M6
STZ-166001	60	71	32	20	6	20	58	22	20	4.5	14.5	6	4.5	ø11
STZ-208001	60	71	32	16	6	20	58	22	20	13	14.5	6	4.5	M10
STZ-302403	60	60	32	16	6	20	27	22	20	9.5	14.5	6	4.5	M6

[106)] Adapter plate with 8 pins

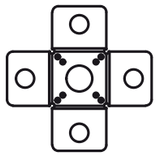

Position indicators and lead screw clamps available ▶ Page 1362

drylin® drive technology accessories

drylin® drive technology | Accessories | Product range

Stainless steel angle kit for SHT-XZ structure

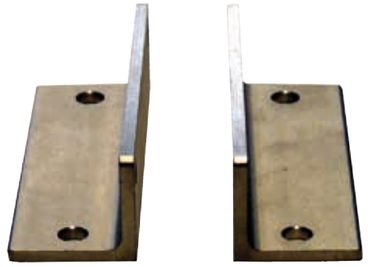

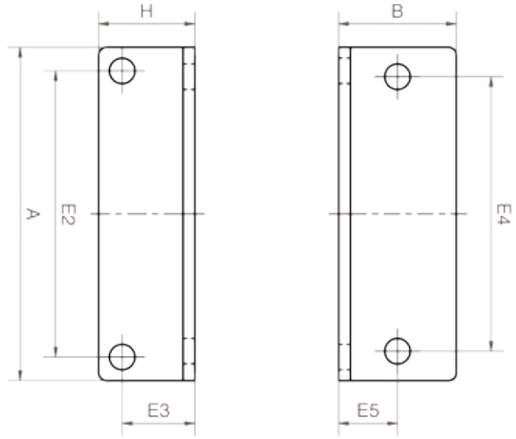

drylin® SHT-WS is an angle kit for the SHT linear modules series. Stainless steel angle brackets make any combination possible.

- 2 different sizes
- Can be combined with all drylin® linear modules series SHT/SHTC/SHTS with sizes 12 and 20

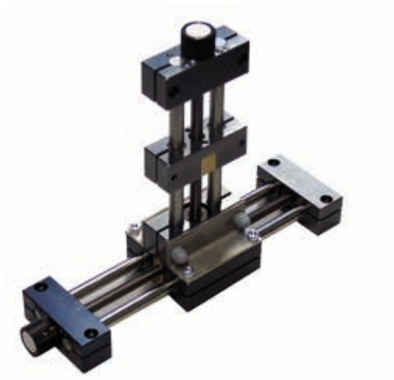

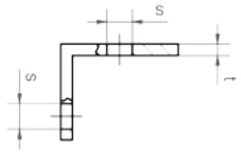

Dimensions [mm]

Part No.	A	H	B	E2	E3	E4	E5	s	t
SHT-WS-12	85	26.5	30	73	20.5	70	15	6.5	3
SHT-WS-20	130	36	35	108	18	115	35	8.5	5

drylin® drive technology | Accessories | Product range

Linear robot drives

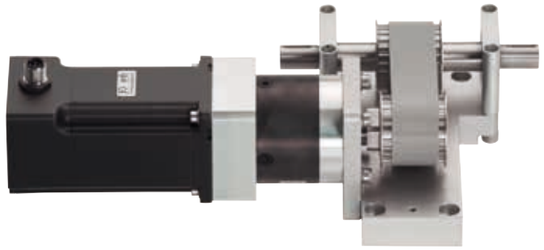

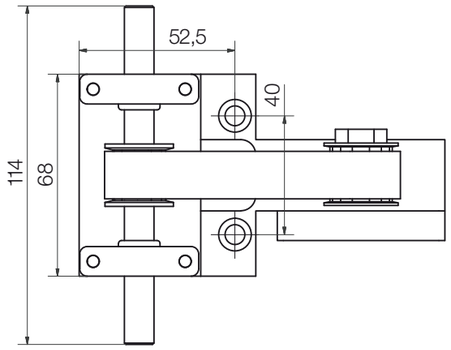

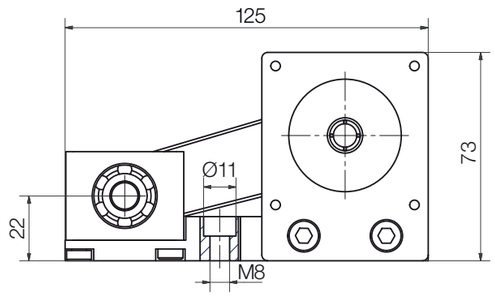

- Connection of NEMA stepper motors in linear robot structures
- Space-saving
- More safety due to encoder and brake

Dimensions [mm]

Part No.	Installation size	Motor	Design
GD-0001	1	NEMA23	Stranded wire
GD-0002	1	NEMA23	Connectors
GD-0003	1	NEMA23	Encoder
GD-0004	1	NEMA23	Encoder and brake
GD-0005	1	NEMA23XL	Stranded wire
GD-0006	1	NEMA23XL	Connectors
GD-0007	1	NEMA23XL	Encoder
GD-0008	1	NEMA23XL	Encoder and brake

My sketches