Motion Technology
Pfaff-silberblau
Screw Jacks

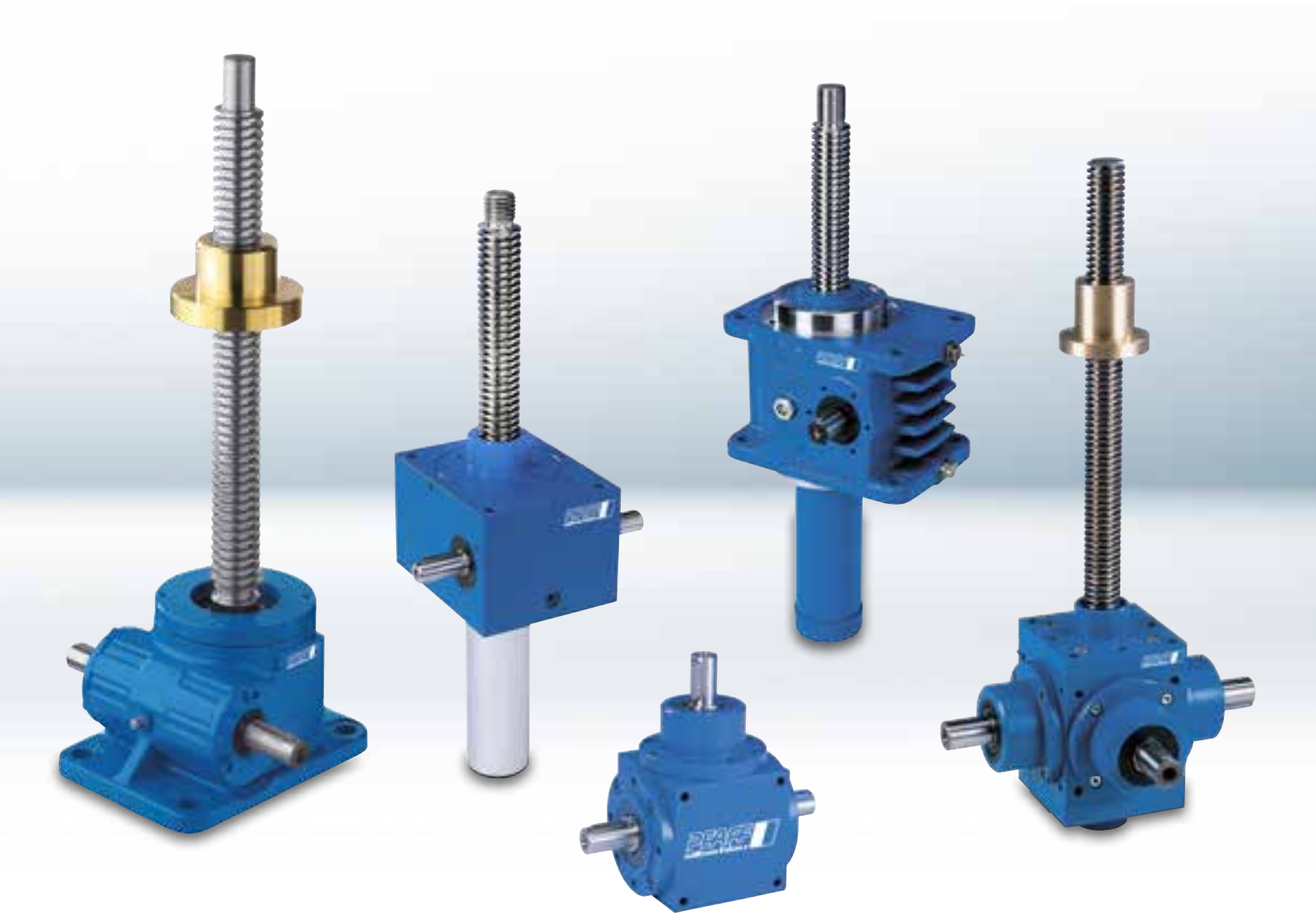

COLUMBUS McKINNON

YOUR PARTNERS
IN MOTION CONTROL

www.pfaff-silberblau.com

Motion technology
by Columbus McKinnon – Pfaff-silberblau

Motion technology of the highest quality for every requirement

Columbus McKinnon customers expect safe and precise motion technology: our robust mechanical drives meet these requirements. They move and transport goods and structures in a wide range of industries with absolute reliability. The traditional Pfaff-silberblau brand is an important part of the Columbus McKinnon Group and offers a comprehensive range of sophisticated electromechanical components for linear motion technology such as worm gear screw jacks, lifting columns and threaded drives. With this unique portfolio, customers can combine components and solutions according to their needs.

The motion solutions with worm gear screw jacks from the Pfaff-silberblau brand are used in a wide range of applications in areas such as mechanical engineering, the automotive industry, energy supply, the food sector and logistics applications. Suitable ranges are available for requirements in a wide range of load ranges and different sizes or lifting speeds – from moderate to dynamic. This includes the proven worm gear screw jack ranges as well as the newly developed SSP ranges with stainless steel screw jacks.

Quality products are never interchangeable as comprehensive quality and service from CMCO pay off in competitive advantages for our customers. Columbus McKinnon supports them with advice, engineering and a well-positioned office and field service. They benefit from synergies within the Columbus McKinnon Group in the areas of maintenance, service, installation and calculations. All-in-all, we offer our customers motion technology for efficient production with high operational reliability. In short: an excellent basis for your business success.

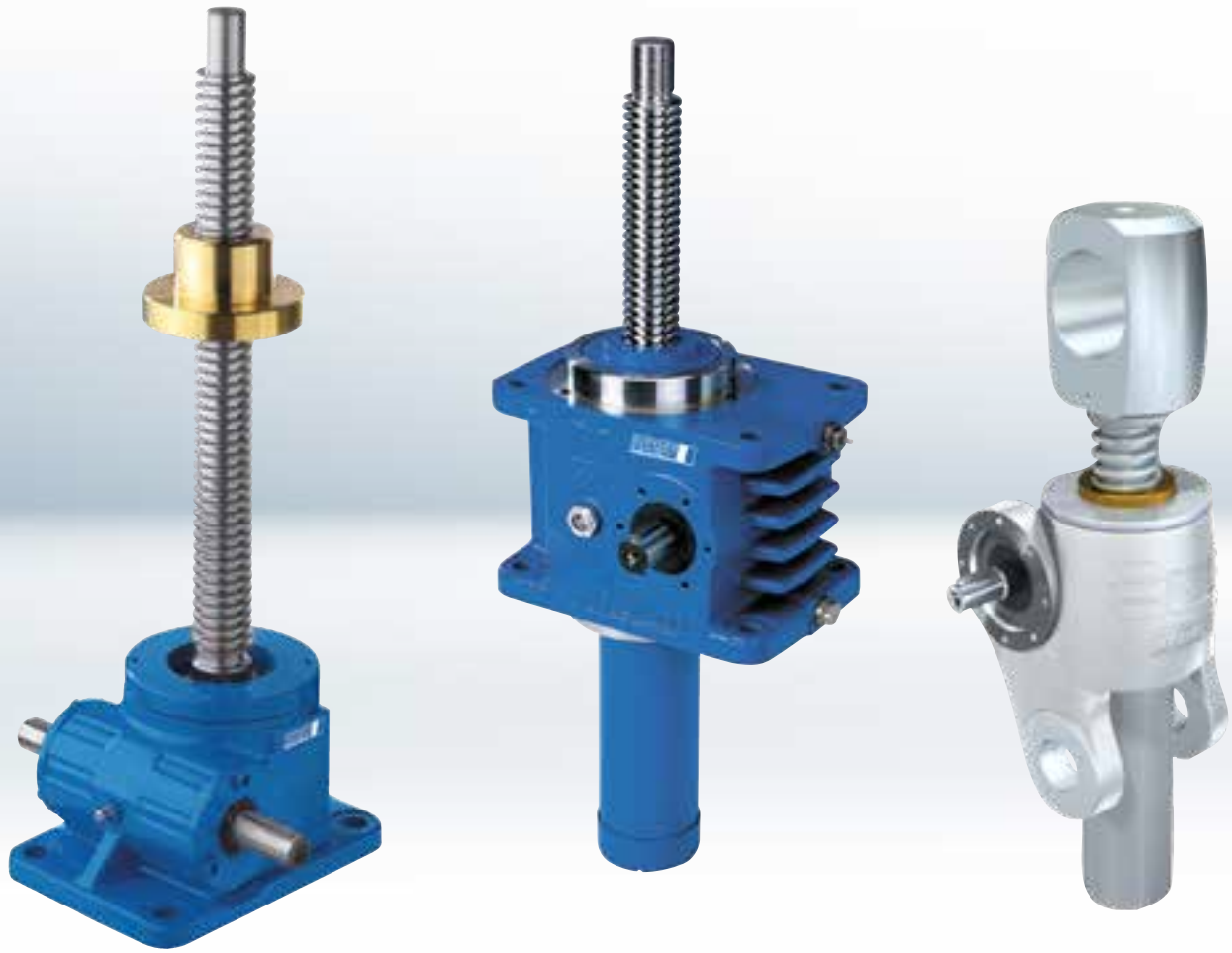

Motion technology
Three-axis functional model

1 Schematic view 2.1
- 2 Screw jacks Type 2
- Coupling
- Connecting flange
- High flexible connecting shafts
- Swiveling consoles
- Electric motor

2 Schematic view 1.1
- 1 Screw jack Type 1
- Coupling
- Connecting flange
- Frequency controlled electric motor

3 Schematic view 4.1
- 4 Screw jacks Type 1
- Bevel gear box
- High flexible connecting shafts
- Coupling
- Electric motor

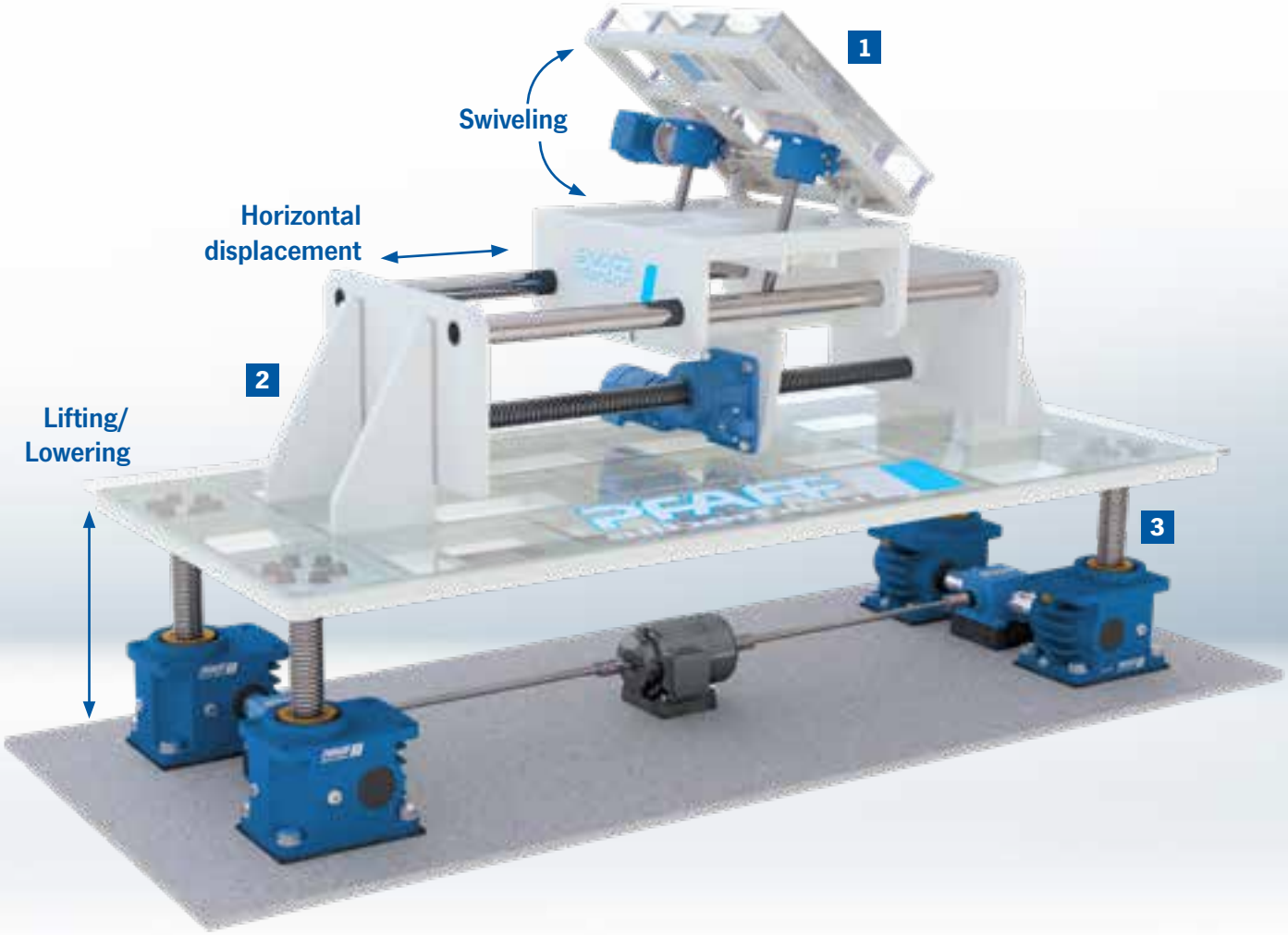

Motion technology
Table of contents

A

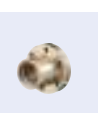

B

C

D

Table of Contents Motion Technology	Page
A: Worm gear screw jacks	**6**
▪ Overview of worm gear screw jacks	7
▪ Construction aid	14
SHE standard screw jacks and SHE-S stainless steel screw jacks	16
▪ Selection table	18
▪ Performance data tables	20
▪ Technical drawings: Type 1, Type 2	24
▪ Mounting positions, shaft/attachment side	38
▪ Ordering details	39
SSP stainless steel screw jacks with swivel plates	40
▪ Selection table	41
▪ Performance data tables	42
▪ Technical drawings	44
▪ Ordering details	47
MERKUR standard screw jacks	48
▪ Selection table	49
▪ Performance data tables	50
▪ Technical drawings: Type 1, Type 2	52
▪ Mounting positions, shaft/attachment side	60
▪ Ordering details	61
HSE high-performance screw jacks	62
▪ Selection table	63
▪ Performance data tables	64
▪ Technical drawings: Type 1, Type 2	68
▪ Mounting positions, shaft/attachment side	78
▪ Ordering details	79
SHG quick-lifting screw jacks	80
▪ Selection table	81
▪ Performance data tables	82
▪ Technical drawings: Type 1, Type 2	84
▪ Mounting positions, shaft/attachment side	92
▪ Ordering details	93
Special travelling nuts	94
▪ Technical drawings	95
Lifting screw protective covers	98
▪ Design features and order code	99
▪ Technical drawings	100

Motion technology
Table of contents

Table of Contents Motion Technology	Page
Couplings and connecting shafts	106
▪ Flexible couplings	107
▪ Flexible overload coupling	109
▪ Connecting shafts	111
▪ Ordering details	115
Accessories	116
▪ Swivel plates	117
▪ Swivel mounting bases	118
▪ Motor mounting flanges, ranges SHE, MERKUR, HSE, SSP	119
▪ Pillow blocks	123
▪ Flange bearings	124
▪ Hand wheels, lubrication device	125
▪ Mechanical limit switches, inductive limit switches	127
▪ Controls	129
B: Bevel gear boxes	**130**
▪ Bevel gear box range	131
▪ Technical Information	132
▪ Performance table	133
▪ Technical drawings	136
▪ Ordering details	142
C: Project planning	**144**
▪ List of formulas	145
▪ Service life	146
▪ Precision ratings	147
▪ Flow diagram	149
▪ Dimensioning of worm gear screw jacks	150
▪ Permitted buckling force	152
▪ Critical screw turning speed	154
▪ Permissible lateral force on the screw	155
▪ Ball screw Ku	157
▪ Dimensioning of lifting systems	158
▪ Schematic drive system layout	160
D: General	**164**
▪ Questionnaire	165
▪ Additional information	166
▪ Catalog overview	167
Reference examples	**23, 37, 46, 59, 77, 109, 112, 126**

Worm gear screw jacks

Columbus McKinnon's quality promise on products and service stands for the full capabilities of electromechanical motion elements in customer projects.

- **Technological and design quality:** the safe, reliable and precise motion technology fulfils a wide range of requirements regarding load range, size or lifting speed. The products thus meet the needs of numerous, demanding industries.
- **Modular system:** thanks to its modular design, the lifting unit/system can be constructed as required for a particular application with defined interfaces.
- **Synchronous operation and positioning:** multi-screw systems can be implemented simply and cost-effectively using connecting shafts or an electronic synchronization control. In addition, stepless positioning is possible through a defined hoist and attachment of electronic components.
- **High safety:** a self-locking screw and/or safety brakes on the drive provide protection against falling. If the support nut should break, a rotating locknut takes up the load. This increases the operational safety of the motion elements significantly and, if necessary, fulfils personnel safety requirements or accident prevention regulations.
- **High environmental compatibility:** the risk of leaks is minimal, especially when using grease-lubricated hoist gears. In addition, the motion elements have lower CO_2 emissions compared to pneumatic and hydraulic solutions.
- **Lower operating costs:** they result from the lower energy requirements compared to hydraulic and pneumatic drives.
- **Designed for harsh conditions:** the worm gear screw jacks impress with high precision and long service life, even when used in harsh environments with, for example, oil, dirt, pressure, vibration and extreme temperatures.

Screw jacks
Overview

Screw jacks

SHE

SHE-S

SSP

HSE

MERKUR

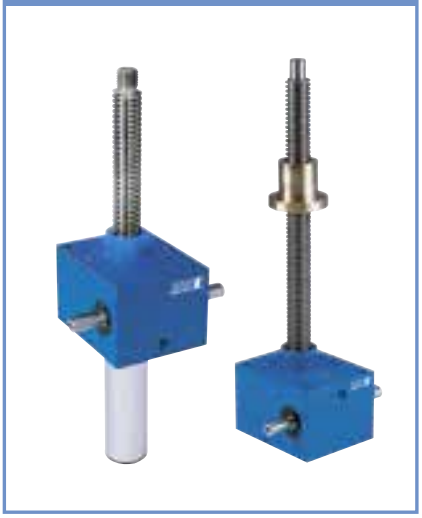

SHG

Screw jacks

Module overview – exploded view

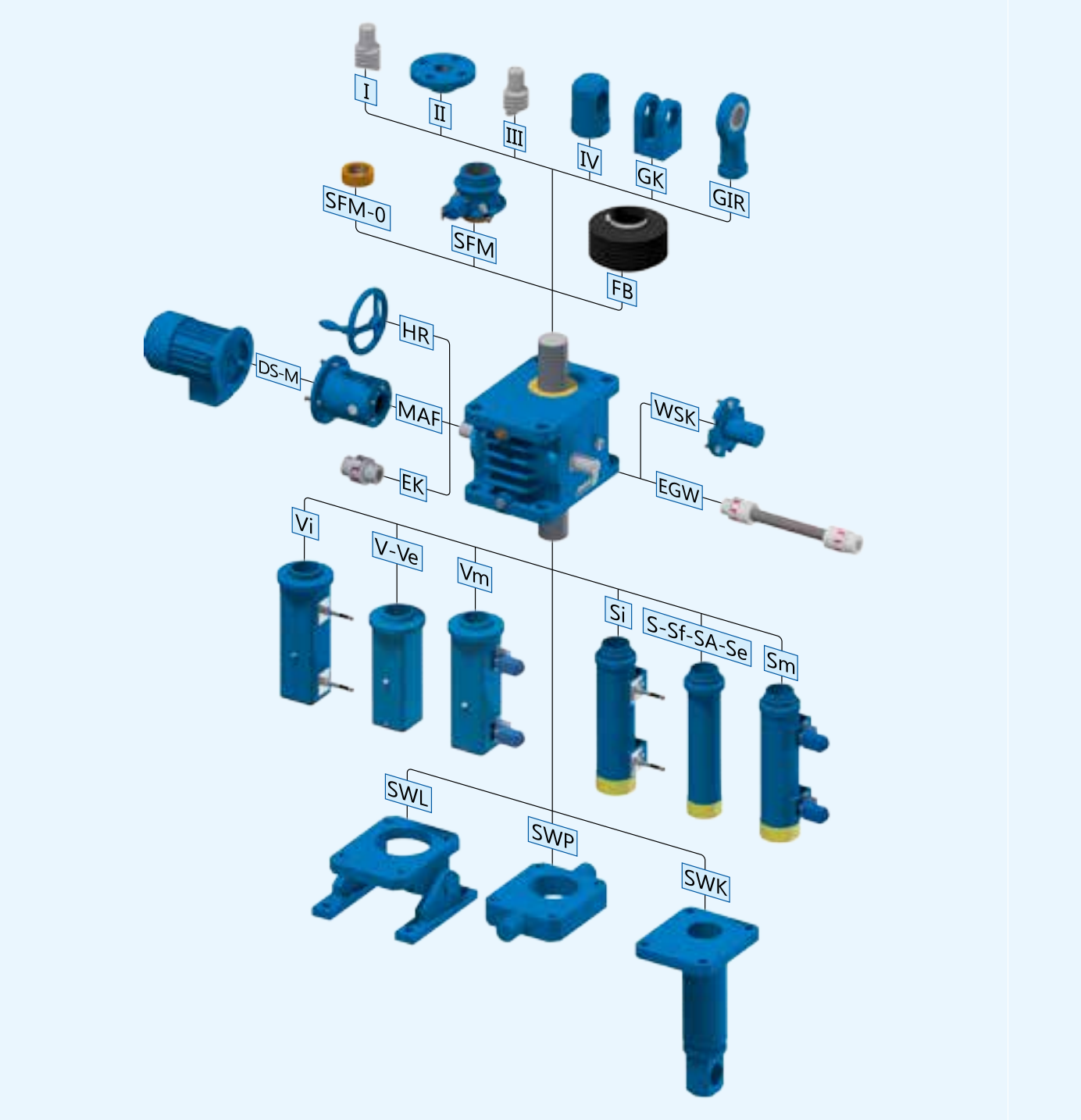

Type 1: lifting screw			
GK	Fork-type head	**Sf**	2nd guide ring
GIR	Articulated head	**Sm/Si**	Limit switch (mechanical/inductive)
SFM-O	Short safety nut	**Vm/Vi**	Limit switch (mechanical/inductive)
SFM	Safety nut	**Se/Ve**	Limit stop
SFM-E/SFM-D	Limit switch/rotation monitoring	**SA**	Turn out lock
S	Protection tube	**SWK**	Swiveling configuration
V	Anti-turn device	Other versions on request	

Accessories			
FB	Flexible protection boot	**WSK**	Shaft protection cap
HR	Hand wheel	**EGW**	Connecting shaft
DS-M	Three-phase motor	**SWL**	Swivel mounting base
MAF	Motor mounting flange	**SWP**	Swivel plate
EK	Flexible coupling		
Other versions on request			

Screw jacks

Module overview – exploded view

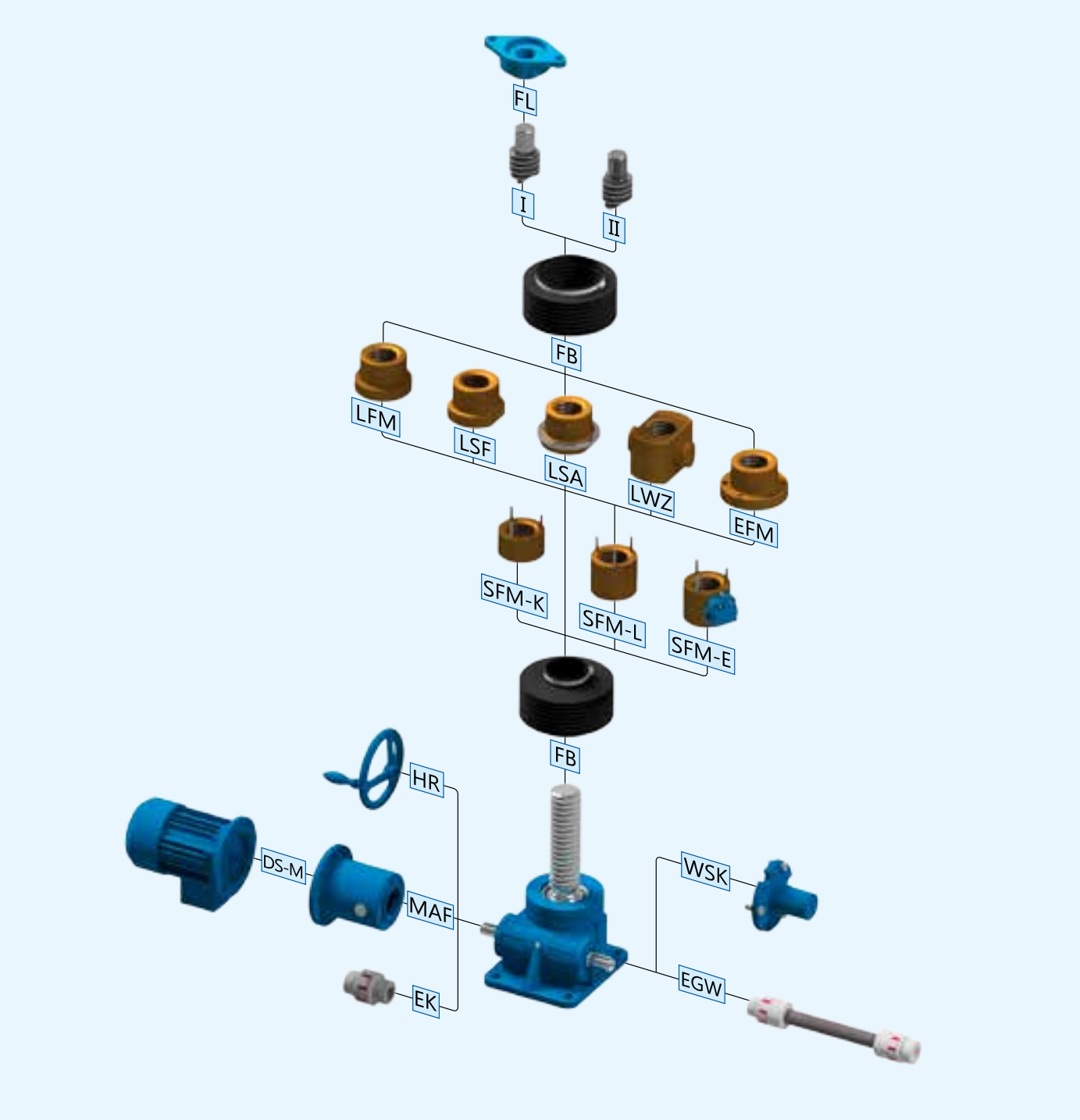

Type 2: rotating screw			
FL	Flange bearing	**EFM**	Travelling nut with hole pattern
LFM	Standard travelling nut	**SFM-K**	Short safety nut
LSF	Travelling nut with flat surface	**SFM-L**	Long safety nut
LSA	Travelling nut with spherical support	**SFM-E**	Limit switch
LWZ	Travelling nut with trunnion		
Other versions on request			

Accessories			
FB	Flexible protection boot	**EK**	Flexible coupling
HR	Hand wheel	**WSK**	Shaft protection cap
DS-M	Three-phase motor	**EGW**	Connecting shaft
MAF	Motor mounting flange		
Other versions on request			

Screw jacks
Configuration type 1: axial lifting screw

A

Type 1: axial lifting screw – nut thread integrated into worm gear

Worm gear screw jacks SHE/HSE/MERKUR

- Drive is effected by the worm shaft acting on the worm wheel with nut thread.
- Lifting movement is effected by an anti-turn device (supplied with unit or added on site).

Type 1: axial lifting screw – nut thread integrated into bevel gear

Quick-lifting screw jack SHG

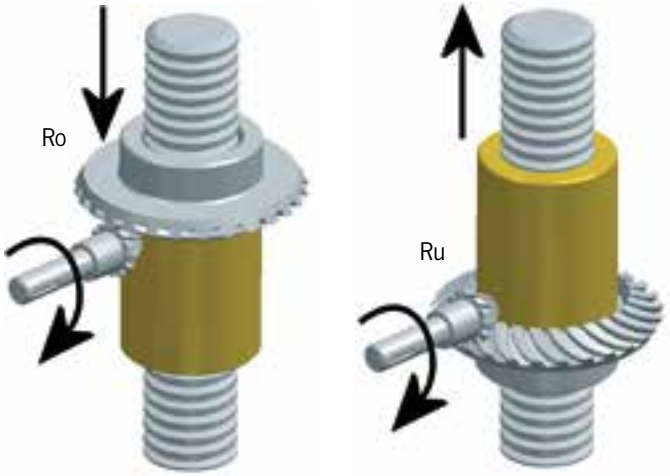

- Drive is provided by the driving pinion acting on the bevel gear with nut thread.
- Lifting movement is effected by an anti-turn device (supplied with unit or added on site).
- The alignment of the bevel gear (Ro= top wheel / Ru = bottom wheel) determines the direction of rotation.

B

C

D

Note:
standard configuration = right-handed screw ↑ axial movement (direction) ↷ turning direction of drive shaft

Screw jacks
Configuration type 2: rotating screw

Type 2: rotating screw – nut thread in travelling nut outside the housing

Worm gear screw jacks SHE/HSE/MERKUR

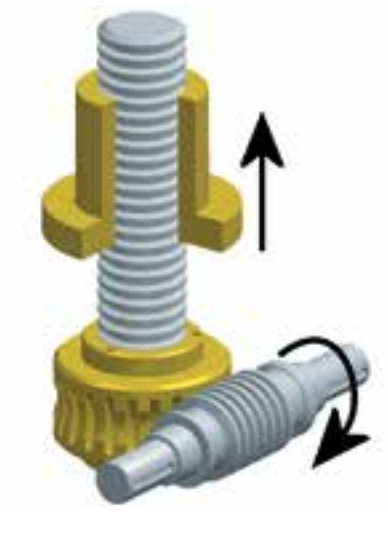

- Drive is effected by the worm shaft acting on the worm wheel with nut thread.
- Rotating movement is effected by the positive engagement of the screw in the worm wheel.
- Lifting movement is effected by the travelling nut anti-turn device fitted on-site.

Type 2: rotating screw – nut thread in travelling nut outside the housing

Quick-lifting screw jack SHG

- Drive is provided by the driving pinion acting on the bevel gear with nut thread.
- Rotating movement is effected by the positive engagement of the screw in the bevel gear.
- Lifting movement is effected by the travelling nut anti-turn device fitted on-site.
- The alignment of the bevel gear (Ro= top wheel / Ru = bottom wheel) determines the direction of rotation (see type 1).

Note:
standard configuration = right-handed screw ↑ axial movement (direction) ↷ turning direction of drive shaft

Screw jacks
Overview screw jacks

Type 1: Lifting screw

Type 2: Rotating screw

Standard worm gear screw jack SHE

13 different sizes

Lifting capacities from 5 to 2000 kN

Input speeds up to 1500 min^{-1}

- Self-locking trapezoidal screw
- Grease-lubricated configuration
- Worm gear pairs in two ratio steps (normal „N“ and slow „L“)
- Worm-drive shaft case-hardened and ground
- Robust construction for slow and medium lifting speeds

Possible usage according to directive 2014/34/EU (ATEX)

Type 1: Lifting screw

Type 2: Rotating screw

Stainless worm gear screw jack SHE-S

4 different sizes

Lifting capacities from 30 to 200 kN

Input speeds up to 1500 min^{-1}

- Self-locking trapezoidal screw
- Complete stainless
- Grease-lubricated configuration
- Worm gear pairs in two ratio steps (normal „N“ and slow „L“)
- Worm-drive shaft tempered and ground

Possible usage according to directive 2014/34/EU (ATEX)

Type 1: Lifting screw

Type 2: Rotating screw

Stainless worm gear screw jack with swivel brackets SSP

4 different sizes

Lifting capacities from 50 to 250 kN

Input speeds up to 1500 min^{-1}

- Self-locking trapezoidal screw
- Complete stainless
- Grease-lubricated configuration
- Worm gear pairs in two ratio steps (normal „N“ and slow „L“)
- Worm-drive shaft tempered and ground

Possible usage according to directive 2014/34/EU (ATEX)

Screw jacks
Overview screw jacks

Standard worm gear screw jack MERKUR

9 different sizes

Lifting capacities from 2.5 to 500 kN

Input speeds up to 1500 min^{-1}

- Self-locking trapezoidal screw
- Grease-lubricated configuration
- All-round configuration permits easier alignment
- Conforms to European manufacturers‘ standards for cubic shaped worm gear screw jacks
- Worm gear pairs in two ratio steps (normal „N“ and slow „L“)

Possible usage according to directive 2014/34/EU (ATEX)

Type 1: Lifting screw

Type 2: Rotating screw

High-performance worm gear screw jack HSE

8 different sizes

Lifting capacities from 5 to 1000 kN

Input speeds up to 3000 min^{-1}

- Self-locking trapezoidal screw
- Separate lubrication circuits: Tr screw with grease-lubrication and worm gears with oil lubrication
- Worm gear pairs in two ratio steps (normal „N“ and slow „L“)
- Worm-drive shaft case-hardened and ground
- Patented gearing construction with different heat zones for medium and high lifting speeds

Possible usage according to directive 2014/34/EU (ATEX)

Type 1: Lifting screw

Type 2: Rotating screw

Quick lifting screw jack SHG

4 different sizes

Lifting capacities from 15 to 90 kN

Input speeds up to 3000 min^{-1}

- Self-locking trapezoidal screw
- Separate lubrication circuits: Tr screw grease-lubrication and bevel gear boxes with lubrication
- Bevel gear boxes in two ratio steps (2:1 and 3:1 as required)
- Gearing is case-hardened and ground
- Spiral bevel gear boxes for high lifting speeds, high efficiency ratings and long service life

Type 1: Lifting screw

Type 2: Rotating screw

Screw jacks
Construction aid

A

Requirements and solution system

To help you find your way around, we have set out all applications with the requirements and solution.
Your task specification: Screw jack requirements; special configuration factors and features
Our solution: Suggested solutions and recommendations

Construction		
Your task specification	Our solution	Symbol
▪ No possible guides on-site ▪ Lateral forces cannot be excluded ▪ Restoring forces produced by swiveling motion	❶ **Second guide ring** increases stability and prevents non-permitted edge compression on the nut thread ❷ **Articulated head** joint screw mounting ❸ + ❹ **Movable traveling nut mounting** Use trunnion or spherical nut support **Note: Lateral forces should be avoided, since they drastically reduce the service life of the supporting nut**	 ❶ ❷ ❸ ❹
▪ Worm gear screw jack as single drive unit without on-site guidance ▪ No on-site anti-turn device available ▪ With/without stroke limitation	**Anti-turn device** Standard system using square tube or special configuration with feather key (for low lifting forces)	
▪ Mechanical run-out prevention system required ▪ With/without stroke limitation	**Mechanical stroke limitation, configuration type 1** Screw end with mechanical end stop for emergency limiting. Protection tube with fitted limit switches	
▪ Swiveling and tipping movements provided by worm gear screw jacks ▪ With/without stroke limitation	**Swivel-lug configuration** Secure drive elements at two points using movable mountings. This can be done using head IV on both screw ends or articulated head. The bending moments resulting from the swiveling motion should be minimized as much as possible by means of low-friction joints.	
▪ Requirement of constant axial play in trapezoidal screw thread	**Play-adjustable configuration** Special configuration with preloaded split worm wheel. Axial play can be readjusted via the housing cover **(Type 1).** Special configuration with prestressed double traveling nuts (**Type 2).** Axial play can be readjusted. **Note: Only applies to load reversal (tensile and compression load). No readjustment is required if ball screws are used.**	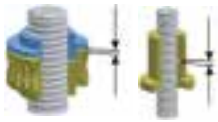
▪ Requirement for increased operating safety ▪ Limitation of material damage in event of nut breaking	**Short safety nut** ▪ Supporting nut with short safety nut ▪ Visual wear monitoring **Note: Monitoring is only possible in one load direction.**	
▪ Demand for personal protection or accident prevention provisions DGUV R100-500, Kap. 2.10 (Pers. under suspended load/work platforms) ▪ Or configuration according to provisions for stages and studios DGUV V17/18	**Long safety nut** When using worm gear screw jacks in theater stages BGV C1 (DGUV V17/18), lifting platforms (DGUV R100-500, Kap. 2.10) or lifting systems with possible danger to persons, the worm gear screw jacks are designed according to the current regulations; among others, the fall protection (self-locking screws and/or mechanical safety brakes in the drive system). On demand the synchronizing device, are ensured by additional parts.	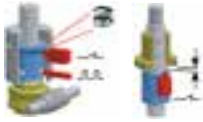
▪ Large lifting capacity with small installation space	**Telescopic configuration** Right-/left-hand screw system needs only half the protection tube length (stroke x 0.5 + approx. 30 mm) at a large stroke	
▪ Large stroke lengths and unfavorable clamping with minimal lifting force	**Reinforced screw** for configuration type 2, possible under certain circumstances for configuration type 1	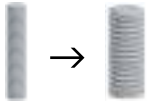
▪ No independent lowering of the load in standstill	**Single-start trapezoidal screw Tr** with self-locking system (e.g. Tr 40x7)	

B

C

D

Screw jacks
Construction aid

Construction		
Your task specification	Our solution	Symbol
▪ High carrying loads at same screw diameter	**Buttress-thread screw S**	
▪ High lifting speed required ▪ Economically efficient alternative to ball screws	**Multi-start trapezoidal screw thread Tr** ▪ Efficiency (Tr > 50 %) (e.g. 2-start screw Tr 40x14 P7) ▪ **No self-locking system → Motor brake always required**	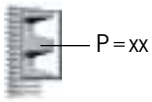
▪ Self-locking out of actuation ▪ No motor brake desired	**Single-start trapezoidal screw with special pitch** ▪ No additional motor brake required (e.g. Tr 40x5)	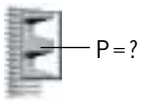
▪ High lifting speed ▪ Minimal axial play (≤ 0.03 mm) ▪ High pitch accuracy P300 (≤ 0.05 mm) ▪ Minimal friction	**Ball screw Ku** or planetary roller screw Pl ▪ Efficiency h_{Ku} ≈ 90 % h_{Pl} ≈ 65 % ▪ **No self-locking → Motor brake absolutely required**	
▪ Positioning ▪ Position measurement	**Shaft encoder attachment** All common makes on request directly attached to the worm gear screw jack ▪ Angle encoder / incremental encoder Absolute value encoder SSI or DP Profibus	
▪ Available installation space is limited	**Hollow shaft** Motor attachment via hollow shaft and IEC flange	
▪ Motor should be attached directly to worm gear screw jack	**Motor mounting flange** for all standard motors Special flanges on request	
▪ Swivel movement of parts must be implemented	**Swivel mounting base** Complete with bearing blocks **Swivel plate**	
▪ Active dust / dirt or moisture protection is required	**Screw protection** Flexible protection boots Spiral spring cover	
▪ Variable construction attachment desired	**Screw heads** Head I = plain head Head II = flange plate Head III = threaded head Head IV = rod-type head Head GK = fork-type head Option = articulated head	
▪ Manual drive or manual emergency drive required	**Hand wheel** Only used as an emergency drive or for small lifting movements. According to DIN 950 suitable for respective worm gear screw jack, ready drilled and grooved.	

Screw jacks
SHE standard screw jacks

A

B

C

D

Features and processing

Quality stands for lasting success: this is embodied by the proven SHE worm gear screw jack ranges. Covering a load range from 0.5 t to 200 t, it boasts a classic housing shape made of spheroidal graphite cast iron. The SHE ranges is optimally used where high loads have to be positioned and lifted precisely at medium duty cycles and moderate lifting speeds. Reference projects underline the versatility, robustness and reliability of the SHE ranges. These include, for example, a lifting system in a research laboratory for load tests, an indoor running track that can be adjusted in height and inclination and a lock opening system in hydraulic steel engineering.

13 different sizes

Lifting capacities from 5 to 2000 kN

Input speeds up to 1500 min^{-1}

- Self-locking trapezoidal screw
- Grease-lubricated configuration
- Worm gear pairs in two ratio steps (normal „N“ and slow „L“)
- Worm-drive shaft case-hardened and ground
- Robust construction for slow and medium lifting speeds

Possible usage according to directive 2014/34/EU (ATEX)

Screw jacks
SHE-S stainless steel screw jacks

Features and processing

The SHE-S screw jacks were developed for use in corrosive environments. The SHE-S ranges is the stainless alternative to our SHE ranges with identical dimensions.

All components that come into contact with corrosive media are made of corrosion-resistant materials.

4 different sizes

Lifting capacities from 30 to 200 kN

Input speeds up to 1500 min^{-1}

- Self-locking trapezoidal screw
- Complete stainless
- Grease-lubricated configuration
- Worm gear pairs in two ratio steps (normal „N“ and slow „L“)
- Worm-drive shaft tempered and ground

Possible usage according to directive 2014/34/EU (ATEX)

SHE range
Selection table

A

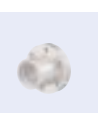

Selection table screw jack SHE

Size		0,5	1.1	3.1[4]	5.1[4]	15.1[4), 5)]	20.1[4), 5)]
Max. lifting capacity dynamic/static	[kN]	5/5	15/15	30/45	50/75	100/150	200/200
Max. tensile load dynamic/static	[kN]	5/5	10/10	30/45	50/75	99/99	178/200
Screw Tr[1]		18x6	24x5	30x6	40x7	60x12	70x12
Ratio N		10:1	5:1	6:1	6:1	7 2/3:1	8:1
Lift per revolution for ratio N	[mm/per rev.]	0,60	1,0	1,0	1,167	1,565	1,5
Ratio L		20:1	20:1	24:1	24:1	24:1	24:1
Lift per revolution for ratio L	[mm/per rev.]	0,30	0,25	0,25	0,292	0,50	0,5
Max. drive capacity[2] at T = 20 °C Duty cycle (ED) 20 %/h	[kW]	0,17	0,4	0,65	1,15	2,7	3,8
Max. drive capacity[2] at T = 20 °C Duty cycle (ED) 10 %/h	[kW]	0,25	0,6	1,25	1,9	3,85	5,4
Screw efficiency rating	[%]	54	41	40	36,5	39,5	37,5
Overall efficiency for ratio N	[%]	31	30	27	24	27	24
Overall efficiency for ratio L	[%]	24	23	19	16	17	17
Torque, capacity, turning-speed at 20 % ED/h and 20 °C		see performance tables page 20–23					
Screw torque at max. lifting power	[Nm]	8,8	29,1	60	153	702	1061
Max. permitted drive-shaft torque	[Nm]	12	29,4	46,5	92	195	280
Mass moment of inertia J[3] Ratio N type 1	[kg cm²]	0,095	0,383	0,78	2,234	5,256	11,93
Mass moment of inertia J[3] Ratio N type 2	[kg cm²]	0,1	0,39	0,792	2,273	5,356	12,14
Mass moment of inertia J[3] Ratio L type 1	[kg cm²]	0,089	0,269	0,558	1,696	4,081	9,427
Mass moment of inertia J[3] Ratio L type 2	[kg cm²]	0,089	0,275	0,558	1,699	4,091	9,451
Max. permitted screw length for compression load	[mm]	see buckling diagrams page 152–153					
Housing material SHE		G-AlSi10Mg		EN-GJS-500-7 (GGG 50)			
Housing material SHE-S		G-AlSi10Mg		1.4552			
Weight without stroke length and protection tube	[kg]	1,2	3	7,3	16,2	26,5	36
Screw weight per 100 mm stroke	[kg]	0,14	0,26	0,45	0,82	1,79	2,52
Amount of lubricant in worm gear	[kg]	0,05	0,1	0,2	0,35	0,9	2

B

Dimension plans type 1: page 24–31, type 2: page 32–36

C

1) Also applies to Ku screw (see page 157)
2) Max. permitted values for type 1 and Tr screw. Higher values are possible when using type 2 or Ku screw.
3) Referring to 100 mm screw length
4) Also available in stainless steel version
5) Also available as swivel lug version (SSP)

D

Possible usage according to directive 2014/34/EU (ATEX)

SHE range
Selection table

								Selection table screw jack SHE
25[5]	35	50.1	75	100.1	150.1	200.1		**Size**
250/250	350/350	500/500	750/750	800/1000	1500/1500	2000/2000	[kN]	Max. lifting capacity dynamic/static
250/250	350/350	500/500	750/750	800/1000	1500/1500	-	[kN]	Max. tensile load dynamic/static
90x16	100x16	120x16	140x20	160x20	190x24	220x28		Screw Tr[1]
10 2/3:1	10 2/3:1	10 2/3:1	12:1	12:1	19:1	17,5:1		Ratio N
1,5	1,5	1,5	1,667	1,667	1,263	1,6	[mm/per rev.]	Lift per revolution for ratio N
32:1	32:1	32:1	36:1	36:1	-	-		Ratio L
0,5	0,5	0,5	0,556	0,556	-	-	[mm/per rev.]	Lift per revolution for ratio L
5	6	7,4	9	12,5	18,5	on request	[kW]	Max. drive capacity[2] at T = 20 °C Duty cycle (ED) 20 %/h
7,2	8,6	10,4	12,6	17,5	26	on request	[kW]	Max. drive capacity[2] at T = 20 °C Duty cycle (ED) 10 %/h
36,5	34	30	31,6	28,5	28,8	29	[%]	Screw efficiency rating
22	21	15	18	15	15	17,5	[%]	Overall efficiency for ratio N
15	14	10	12	9	-	-	[%]	Overall efficiency for ratio L
see performance tables page 20–23								Torque, capacity, turning-speed at 20 % ED/h and 20 °C
1725	2600	4235	7550	11115	19850	30700	[Nm]	Screw torque at max. lifting power
480	705	840	2660	2660	4260	on request	[Nm]	Max. permitted drive-shaft torque
23,42	55,8	108,8	318	428,5	on request	on request	[kg cm²]	Mass moment of inertia J[3] Ratio N type 1
23,74	56,3	109,9	325,2	431,3	on request	on request	[kg cm²]	Mass moment of inertia J[3] Ratio N type 2
19,59	44,08	88,37	275,6	346	on request	on request	[kg cm²]	Mass moment of inertia J[3] Ratio L type 1
19,62	44,13	88,49	279,4	346,3	on request	on request	[kg cm²]	Mass moment of inertia J[3] Ratio L type 2
see buckling diagrams page 152–153							[mm]	Max. permitted screw length for compression load
EN-GJS-500-7 (GGG 50)								**Housing material SHE**
–								**Housing material SHE-S**
70,5	87	176	ca, 350	538	850	ca, 1000	[kg]	**Weight without stroke length and protection tube**
4,15	5,2	7,7	10	13,82	19,6	26,2	[kg]	**Screw weight per 100 mm stroke**
1,3	2,5	4	5	10	10	on request	[kg]	**Amount of lubricant in worm gear**

SHE range
Performance tables (screw jacks with Tr screw)

A

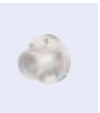

SHE range (Standard worm gear screw jacks) and SHE-S range

Rotary speed, power requirement and permitted lifting speed for ratio N and L with single-start, **lifting (type 1) trapezoidal screw.** All performance data is expressed in terms of dynamic lifting capacity.

With duty ratio of < 10 %/h or configuration with rotating screw (type 2), the maximum permitted drive capacities can be increased. In this case, please consult our screw jack specialists.

Performance table SHE 0,5 screw Tr 18x6

Speed	Lifting speed		F = 5 kN				F = 4 kN				F = 3 kN				F = 2,5 kN				F = 2 kN				F = 1,5 kN				F = 1 kN			
n	N	L	N		L		N		L		N		L		N		L		N		L		N		L		N		L	
[1/min]	[m/min]		Nm	kW	Nm	kW	Nm	kW	Nm	kW	Nm	kW	Nm	kW	Nm	kW	Nm	kW	Nm	kW	Nm	kW	Nm	kW	Nm	kW	Nm	kW	Nm	kW
1500	0,90	0,450	1,54	0,24	0,99	0,16	1,23	0,19	0,80	0,13	0,92	0,15	0,60	0,10	0,77	0,12	0,50	0,10	0,62	0,10	0,40	0,10	0,46	0,10	0,30	0,10	0,31	0,10	0,20	0,10
1000	0,60	0,300	1,54	0,16	0,99	0,10	1,23	0,13	0,80	0,10	0,92	0,10	0,60	0,10	0,77	0,10	0,50	0,10	0,62	0,10	0,40	0,10	0,46	0,10	0,30	0,10	0,31	0,10	0,20	0,10
750	0,45	0,225	1,54	0,12	0,99	0,10	1,23	0,10	0,80	0,10	0,92	0,10	0,60	0,10	0,77	0,10	0,50	0,10	0,62	0,10	0,40	0,10	0,46	0,10	0,30	0,10	0,31	0,10	0,20	0,10
600	0,36	0,180	1,54	0,10	0,99	0,10	1,23	0,10	0,80	0,10	0,92	0,10	0,60	0,10	0,77	0,10	0,50	0,10	0,62	0,10	0,40	0,10	0,46	0,10	0,30	0,10	0,31	0,10	0,20	0,10
500	0,30	0,150	1,54	0,10	0,99	0,10	1,23	0,10	0,80	0,10	0,92	0,10	0,60	0,10	0,77	0,10	0,50	0,10	0,62	0,10	0,40	0,10	0,46	0,10	0,30	0,10	0,31	0,10	0,20	0,10
300	0,18	0,090	1,54	0,10	0,99	0,10	1,23	0,10	0,80	0,10	0,92	0,10	0,60	0,10	0,77	0,10	0,50	0,10	0,62	0,10	0,40	0,10	0,46	0,10	0,30	0,10	0,31	0,10	0,20	0,10
100	0,06	0,030	1,54	0,10	0,99	0,10	1,23	0,10	0,80	0,10	0,92	0,10	0,60	0,10	0,77	0,10	0,50	0,10	0,62	0,10	0,40	0,10	0,46	0,10	0,30	0,10	0,31	0,10	0,20	0,10
50	0,03	0,015	1,54	0,10	0,99	0,10	1,23	0,10	0,80	0,10	0,92	0,10	0,60	0,10	0,77	0,10	0,50	0,10	0,62	0,10	0,40	0,10	0,46	0,10	0,30	0,10	0,31	0,10	0,20	0,10

Performance table SHE 1.1 screw Tr 24x5

Speed	Lifting speed		F = 15 kN				F = 12 kN				F = 10 kN				F = 8 kN				F = 6 kN				F = 4 kN				F = 2 kN			
n	N	L	N		L		N		L		N		L		N		L		N		L		N		L		N		L	
[1/min]	[m/min]		Nm	kW	Nm	kW	Nm	kW	Nm	kW	Nm	kW	Nm	kW	Nm	kW	Nm	kW	Nm	kW	Nm	kW	Nm	kW	Nm	kW	Nm	kW	Nm	kW
1500	1,5	0,375	8,1	1,27	2,6	0,42	6,5	1,02	2,1	0,33	5,4	0,85	1,8	0,28	4,3	0,68	1,4	0,22	3,2	0,51	1,1	0,2	2,2	0,34	0,7	0,1	1,1	0,2	0,4	0,1
1000	1	0,25	8,1	0,85	2,6	0,28	6,5	0,68	2,1	0,22	5,4	0,56	1,8	0,2	4,3	0,45	1,4	0,2	3,2	0,34	1,1	0,1	2,2	0,23	0,7	0,1	1,1	0,1	0,4	0,1
750	0,75	0,188	8,1	0,64	2,6	0,21	6,5	0,51	2,1	0,2	5,4	0,42	1,8	0,2	4,3	0,34	1,4	0,1	3,2	0,25	1,1	0,1	2,2	0,2	0,7	0,1	1,1	0,1	0,4	0,1
600	0,6	0,15	8,1	0,51	2,6	0,2	6,5	0,41	2,1	0,2	5,4	0,34	1,8	0,1	4,3	0,27	1,4	0,1	3,2	0,2	1,1	0,1	2,2	0,2	0,7	0,1	1,1	0,1	0,4	0,1
500	0,5	0,125	8,1	0,42	2,6	0,2	6,5	0,34	2,1	0,1	5,4	0,28	1,8	0,1	4,3	0,23	1,4	0,1	3,2	0,2	1,1	0,1	2,2	0,1	0,7	0,1	1,1	0,1	0,4	0,1
300	0,3	0,075	8,1	0,25	2,6	0,1	6,5	0,2	2,1	0,1	5,4	0,2	1,8	0,1	4,3	0,2	1,4	0,1	3,2	0,1	1,1	0,1	2,2	0,1	0,7	0,1	1,1	0,1	0,4	0,1
100	0,1	0,025	8,1	0,1	2,6	0,1	6,5	0,1	2,1	0,1	5,4	0,1	1,8	0,1	4,3	0,1	1,4	0,1	3,2	0,1	1,1	0,1	2,2	0,1	0,7	0,1	1,1	0,1	0,4	0,1
50	0,05	0,013	8,1	0,1	2,6	0,1	6,5	0,1	2,1	0,1	5,4	0,1	1,8	0,1	4,3	0,1	1,4	0,1	3,2	0,1	1,1	0,1	2,2	0,1	0,7	0,1	1,1	0,1	0,4	0,1

B

Performance table SHE/-S 3.1 screw Tr 30x6

static tensile and compression load max. 45 kN

Speed	Lifting speed		F = 30 kN				F = 25 kN				F = 20 kN				F = 15 kN				F = 10 kN				F = 5 kN				F = 2,5 kN			
n	N	L	N		L		N		L		N		L		N		L		N		L		N		L		N		L	
[1/min]	[m/min]		Nm	kW	Nm	kW	Nm	kW	Nm	kW	Nm	kW	Nm	kW	Nm	kW	Nm	kW	Nm	kW	Nm	kW	Nm	kW	Nm	kW	Nm	kW	Nm	kW
1500	1,50	0,375	17,6	2,76	6,3	1,00	14,7	2,31	5,2	0,82	11,8	1,85	4,2	0,66	8,8	1,39	3,1	0,49	5,9	0,93	2,1	0,33	2,9	0,46	1	0,2	1,5	0,2	0,5	0,1
1000	1,00	0,25	17,6	1,84	6,3	0,66	14,7	1,54	5,2	0,55	11,8	1,23	4,2	0,44	8,8	0,93	3,1	0,33	5,9	0,62	2,1	0,22	2,9	0,31	1	0,1	1,5	0,2	0,5	0,1
750	0,75	0,188	17,6	1,38	6,3	0,50	14,7	1,16	5,2	0,41	11,8	0,93	4,2	0,33	8,8	0,69	3,1	0,25	5,9	0,46	2,1	0,16	2,9	0,23	1	0,1	1,5	0,1	0,5	0,1
600	0,60	0,15	17,6	1,10	6,3	0,40	14,7	0,93	5,2	0,33	11,8	0,74	4,2	0,26	8,8	0,56	3,1	0,2	5,9	0,37	2,1	0,13	2,9	0,19	1	0,1	1,5	0,1	0,5	0,1
500	0,50	0,125	17,6	0,92	6,3	0,33	14,7	0,77	5,2	0,27	11,8	0,62	4,2	0,22	8,8	0,46	3,1	0,16	5,9	0,31	2,1	0,1	2,9	0,15	1	0,1	1,5	0,1	0,5	0,1
300	0,30	0,075	17,6	0,55	6,3	0,20	14,7	0,46	5,2	0,16	11,8	0,37	4,2	0,13	8,8	0,28	3,1	0,1	5,9	0,19	2,1	0,1	2,9	0,1	1	0,1	1,5	0,1	0,5	0,1
100	0,10	0,025	17,6	0,20	6,3	0,10	14,7	0,15	5,2	0,10	11,8	0,12	4,2	0,1	8,8	0,1	3,1	0,1	5,9	0,1	2,1	0,1	2,9	0,1	1	0,1	1,5	0,1	0,5	0,1
50	0,05	0,013	17,6	0,10	6,3	0,10	14,7	0,10	5,2	0,1	11,8	0,1	4,2	0,1	8,8	0,1	3,1	0,1	5,9	0,1	2,1	0,1	2,9	0,1	1	0,1	1,5	0,1	0,5	0,1

C

D

Max. duty ratio at 20 °C ambient temperature: 20 %/h 10 %/h static only (dynamic not permitted)

SHE range
Performance tables (screw jacks with Tr screw)

Performance table SHE/-S 5.1 screw Tr 40x7

static tensile and compression load max. 75 kN

Speed	Lifting speed		F = 50 kN				F = 40 kN				F = 30 kN				F = 20 kN				F = 10 kN				F = 5 kN				F = 3 kN			
n	N	L	N		L		N		L		N		L		N		L		N		L		N		L		N		L	
[1/min]	[m/min]		Nm	kW	Nm	kW	Nm	kW	Nm	kW	Nm	kW	Nm	kW	Nm	kW	Nm	kW	Nm	kW	Nm	kW	Nm	kW	Nm	kW	Nm	kW	Nm	kW
1500	1,75	0,438	38,7	6,08	14,5	2,28	30,9	4,86	11,6	1,82	23,2	3,65	8,7	1,37	15,5	2,43	5,8	0,91	7,7	1,22	2,9	0,5	3,9	0,6	1,5	0,2	1,9	0,3	0,7	0,2
1000	1,17	0,292	38,7	4,05	14,5	1,52	30,9	3,24	11,6	1,22	23,2	2,43	8,7	0,91	15,5	1,62	5,8	0,61	7,7	0,81	2,9	0,3	3,9	0,4	1,5	0,2	1,9	0,2	0,7	0,1
750	0,88	0,219	38,7	3,04	14,5	1,14	30,9	2,43	11,6	0,91	23,2	1,82	8,7	0,68	15,5	1,22	5,8	0,46	7,7	0,61	2,9	0,2	3,9	0,3	1,5	0,1	1,9	0,2	0,7	0,1
600	0,70	0,175	38,7	2,43	14,5	0,91	30,9	1,94	11,6	0,73	23,2	1,46	8,7	0,55	15,5	0,97	5,8	0,36	7,7	0,49	2,9	0,2	3,9	0,2	1,5	0,1	1,9	0,1	0,7	0,1
500	0,58	0,146	38,7	2,03	14,5	0,76	30,9	1,62	11,6	0,61	23,2	1,22	8,7	0,46	15,5	0,81	5,8	0,3	7,7	0,41	2,9	0,2	3,9	0,2	1,5	0,1	1,9	0,1	0,7	0,1
300	0,35	0,088	38,7	1,22	14,5	0,46	30,9	0,97	11,6	0,36	23,2	0,73	8,7	0,27	15,5	0,49	5,8	0,18	7,7	0,24	2,9	0,1	3,9	0,1	1,5	0,1	1,9	0,1	0,7	0,1
100	0,12	0,029	38,7	0,41	14,5	0,15	30,9	0,32	11,6	0,12	23,2	0,24	8,7	0,1	15,5	0,16	5,8	0,1	7,7	0,1	2,9	0,1	3,9	0,1	1,5	0,1	1,9	0,1	0,7	0,1
50	0,06	0,015	38,7	0,2	14,5	0,1	30,9	0,16	11,6	0,1	23,2	0,1	8,7	0,1	15,5	0,1	5,8	0,1	7,7	0,1	2,9	0,1	3,9	0,1	1,5	0,1	1,9	0,1	0,7	0,1

Performance table SHE/-S 15.1 screw Tr 60x12

Speed	Lifting speed		F = 150 kN				F = 100 kN				F = 80 kN				F = 60 kN				F = 40 kN				F = 20 kN				F = 10 kN			
n	N	L	N		L		N		L		N		L		N		L		N		L		N		L		N		L	
[1/min]	[m/min]		Nm	kW	Nm	kW	Nm	kW	Nm	kW	Nm	kW	Nm	kW	Nm	kW	Nm	kW	Nm	kW	Nm	kW	Nm	kW	Nm	kW	Nm	kW	Nm	kW
1500	2,35	0,750	138,4	21,7	70,2	11	92,3	14,5	46,8	7,4	73,8	11,6	37,5	5,9	55,4	8,7	28,1	4,4	36,9	5,8	18,7	2,9	18,5	2,9	9,4	1,5	9,2	1,4	4,7	0,4
1000	1,57	0,500	138,4	14,5	70,2	7,4	92,3	9,7	46,8	4,9	73,8	7,7	37,5	3,9	55,4	5,8	28,1	2,9	36,9	3,9	18,7	2	18,5	1,9	9,4	1	9,2	1	4,7	0,2
750	1,17	0,375	138,4	10,9	70,2	5,5	92,3	7,2	46,8	3,7	73,8	5,8	37,5	2,9	55,4	4,3	28,1	2,2	36,9	2,9	18,7	1,5	18,5	1,4	9,4	0,7	9,2	0,7	4,7	0,2
600	0,94	0,300	138,4	8,7	70,2	4,4	92,3	5,8	46,8	2,9	73,8	4,6	37,5	2,4	55,4	3,5	28,1	1,8	36,9	2,3	18,7	1,2	18,5	1,2	9,4	0,6	9,2	0,6	4,7	0,1
500	0,78	0,250	138,4	7,2	70,2	3,7	92,3	4,8	46,8	2,5	73,8	3,9	37,5	2	55,4	2,9	28,1	1,5	36,9	1,9	18,7	1	18,5	1	9,4	0,5	9,2	0,5	4,7	0,1
300	0,47	0,150	138,4	4,3	70,2	2,2	92,3	2,9	46,8	1,5	73,8	2,3	37,5	1,2	55,4	1,7	28,1	0,9	36,9	1,2	18,7	0,6	18,5	0,6	9,4	0,3	9,2	0,3	4,7	0,1
100	0,16	0,050	138,4	1,4	70,2	0,7	92,3	1	46,8	0,5	73,8	0,8	37,5	0,4	55,4	0,6	28,1	0,3	36,9	0,4	18,7	0,2	18,5	0,2	9,4	0,1	9,2	0,1	4,7	0,1
50	0,08	0,025	138,4	0,7	70,2	0,4	92,3	0,5	46,8	0,2	73,8	0,4	37,5	0,2	55,4	0,3	28,1	0,1	36,9	0,2	18,7	0,1	18,5	0,1	9,4	0,1	9,2	0,1	4,7	0,1

Performance table SHE/-S 20.1 screw Tr 70x12

Speed	Lifting speed		F = 200 kN				F = 160 kN				F = 120 kN				F = 100 kN				F = 75 kN				F = 50 kN				F = 25 kN			
n	N	L	N		L		N		L		N		L		N		L		N		L		N		L		N		L	
[1/min]	[m/min]		Nm	kW	Nm	kW	Nm	kW	Nm	kW	Nm	kW	Nm	kW	Nm	kW	Nm	kW	Nm	kW	Nm	kW	Nm	kW	Nm	kW	Nm	kW	Nm	kW
1500	2,25	0,750	199	31,3	93,6	14,7	159,2	25,0	74,9	11,8	119,4	18,8	56,2	8,8	99,5	15,6	46,8	7,4	74,6	11,7	35,1	5,5	49,7	7,8	23,4	3,7	24,9	3,9	11,7	1,8
1000	1,50	0,500	199	20,8	93,6	9,8	159,2	16,7	74,9	7,8	119,4	12,5	56,2	5,9	99,5	10,4	46,8	4,9	74,6	7,8	35,1	3,7	49,7	5,2	23,4	2,5	24,9	2,6	11,7	1,2
750	1,13	0,375	199	15,6	93,6	7,4	159,2	12,5	74,9	5,9	119,4	9,4	56,2	4,4	99,5	7,8	46,8	3,7	74,6	5,9	35,1	2,8	49,7	3,9	23,4	1,8	24,9	2	11,7	0,9
600	0,90	0,300	199	12,5	93,6	5,9	159,2	10,0	74,9	4,7	119,4	7,5	56,2	3,5	99,5	6,3	46,8	2,9	74,6	4,7	35,1	2,2	49,7	3,1	23,4	1,5	24,9	1,6	11,7	0,7
500	0,75	0,250	199	10,4	93,6	4,9	159,2	8,3	74,9	3,9	119,4	6,3	56,2	2,9	99,5	5,2	46,8	2,5	74,6	3,9	35,1	1,8	49,7	2,6	23,4	1,2	24,9	1,3	11,7	0,6
300	0,45	0,150	199	6,3	93,6	2,9	159,2	5,0	74,9	2,4	119,4	3,8	56,2	1,8	99,5	3,1	46,8	1,5	74,6	2,3	35,1	1,1	49,7	1,6	23,4	0,7	24,9	0,8	11,7	0,4
100	0,15	0,050	199	2,1	93,6	1	159,2	1,7	74,9	0,8	119,4	1,3	56,2	0,6	99,5	1	46,8	0,5	74,6	0,8	35,1	0,4	49,7	0,5	23,4	0,2	24,9	0,3	11,7	0,1
50	0,08	0,025	199	1	93,6	0,5	159,2	0,8	74,9	0,4	119,4	0,6	56,2	0,3	99,5	0,5	46,8	0,2	74,6	0,4	35,1	0,2	49,7	0,3	23,4	0,1	24,9	0,1	11,7	0,1

Performance table SHE 25 screw Tr 90x16

Speed	Lifting speed		F = 250 kN				F = 200 kN				F = 160 kN				F = 120 kN				F = 100 kN				F = 75 kN				F = 50 kN			
n	N	L	N		L		N		L		N		L		N		L		N		L		N		L		N		L	
[1/min]	[m/min]		Nm	kW	Nm	kW	Nm	kW	Nm	kW	Nm	kW	Nm	kW	Nm	kW	Nm	kW	Nm	kW	Nm	kW	Nm	kW	Nm	kW	Nm	kW	Nm	kW
1000	1,50	0,500	271,3	28,4	132,6	13,9	217	22,7	106,1	11,1	173,6	18,2	84,9	8,9	130,2	13,6	63,7	6,7	108,5	11,4	53,1	5,6	81,4	8,5	39,8	4,2	54,3	5,7	26,5	2,8
750	1,13	0,375	271,3	21,3	132,6	10,4	217	17	106,1	8,3	173,6	13,6	84,9	6,7	130,2	10,2	63,7	5	108,5	8,5	53,1	4,2	81,4	6,4	39,8	3,1	54,3	4,3	26,5	2,1
600	0,90	0,300	271,3	17	132,6	8,3	217	13,6	106,1	6,7	173,6	10,9	84,9	5,3	130,2	8,2	63,7	4	108,5	6,8	53,1	3,3	81,4	5,1	39,8	2,5	54,3	3,4	26,5	1,7
500	0,75	0,250	271,3	14,2	132,6	6,9	217	11,4	106,1	5,6	173,6	9,1	84,9	4,4	130,2	6,8	63,7	3,3	108,5	5,7	53,1	2,8	81,4	4,3	39,8	2,1	54,3	2,8	26,5	1,4
300	0,45	0,150	271,3	8,5	132,6	4,2	217	6,8	106,1	3,3	173,6	5,5	84,9	2,7	130,2	4,1	63,7	2	108,5	3,4	53,1	1,7	81,4	2,6	39,8	1,3	54,3	1,7	26,5	0,8
100	0,15	0,050	271,3	2,8	132,6	1,4	217	2,3	106,1	1,1	173,6	1,8	84,9	0,9	130,2	1,4	63,7	0,7	108,5	1,1	53,1	0,6	81,4	0,9	39,8	0,4	54,3	0,6	26,5	0,3
50	0,08	0,025	271,3	1,4	132,6	0,7	217	1,1	106,1	0,6	173,6	0,9	84,9	0,4	130,2	0,7	63,7	0,3	108,5	0,6	53,1	0,3	81,4	0,4	39,8	0,2	54,3	0,3	26,5	0,1

SHE range
Performance tables (screw jacks with Tr screw)

A

Performance table SHE 35 screw Tr 100x16

Speed	Lifting speed		F = 350 kN				F = 300 kN				F = 250 kN				F = 200 kN				F = 150 kN				F = 100 kN				F = 50 kN			
n	N	L	N		L		N		L		N		L		N		L		N		L		N		L		N		L	
[1/min]	[m/min]		Nm	kW	Nm	kW	Nm	kW	Nm	kW	Nm	kW	Nm	kW	Nm	kW	Nm	kW	Nm	kW	Nm	kW	Nm	kW	Nm	kW	Nm	kW	Nm	kW
1000	1,50	0,5000	397,9	41,7	199	20,8	341,1	35,7	170,5	17,9	284,2	29,8	142,1	14,9	227,4	23,8	113,7	11,9	170,5	17,9	85,3	8,9	113,7	11,9	56,8	6	56,8	6	28,4	3
750	1,13	0,375	397,9	31,3	199	15,6	341,1	26,8	170,5	13,4	284,2	22,3	142,1	11,2	227,4	17,9	113,7	8,9	170,5	13,4	85,3	6,7	113,7	8,9	56,8	4,5	56,8	4,5	28,4	2,2
600	0,90	0,300	397,9	25	199	12,5	341,1	21,4	170,5	10,7	284,2	17,9	142,1	8,9	227,4	14,3	113,7	7,1	170,5	10,7	85,3	5,4	113,7	7,1	56,8	3,6	56,8	3,6	28,4	1,8
500	0,75	0,250	397,9	20,8	199	10,4	341,1	17,9	170,5	8,9	284,2	14,9	142,1	7,4	227,4	11,9	113,7	6	170,5	8,9	85,3	4,5	113,7	6	56,8	3	56,8	3	28,4	1,5
300	0,45	0,150	397,9	12,5	199	6,3	341,1	10,7	170,5	5,4	284,2	8,9	142,1	4,5	227,4	7,1	113,7	3,6	170,5	5,4	85,3	2,7	113,7	3,6	56,8	1,8	56,8	1,8	28,4	0,9
100	0,15	0,050	397,9	4,2	199	2,1	341,1	3,6	170,5	1,8	284,2	3	142,1	1,5	227,4	2,4	113,7	1,2	170,5	1,8	85,3	0,9	113,7	1,2	56,8	0,6	56,8	0,6	28,4	0,3
50	0,08	0,025	397,9	2,1	199	1	341,1	1,8	170,5	0,9	284,2	1,5	142,1	0,7	227,4	1,2	113,7	0,6	170,5	0,9	85,3	0,4	113,7	0,6	56,8	0,3	56,8	0,3	28,4	0,1

Performance table SHE 50.1 screw Tr 120x16

Speed	Lifting speed		F = 500 kN				F = 400 kN				F = 300 kN				F = 200 kN				F = 150 kN				F = 100 kN				F = 50 kN			
n	N	L	N		L		N		L		N		L		N		L		N		L		N		L		N		L	
[1/min]	[m/min]		Nm	kW	Nm	kW	Nm	kW	Nm	kW	Nm	kW	Nm	kW	Nm	kW	Nm	kW	Nm	kW	Nm	kW	Nm	kW	Nm	kW	Nm	kW	Nm	kW
1000	1,500	0,500	796	84	398	42	637	67	318	34	478	50	239	25	318	34	159	17	239	25	119	13	159	17	80	8,4	80	8,4	40	4,2
750	1,125	0,375	796	63	398	32	637	50	318	25	478	38	239	19	318	25	159	13	239	19	119	9,4	159	13	80	6,3	80	6,3	40	3,2
500	0,750	0,250	796	42	398	21	637	34	318	17	478	25	239	13	318	17	159	8,4	239	13	119	6,3	159	8,4	80	4,2	80	4,2	40	2,1
400	0,600	0,200	796	34	398	17	637	27	318	14	478	20	239	10	318	14	159	6,7	239	10	119	5	159	6,7	80	3,4	80	3,4	40	1,7
300	0,450	0,150	796	25	398	13	637	20	318	10	478	15	239	7,5	318	10	159	5	239	7,5	119	3,8	159	5	80	2,5	80	2,5	40	1,3
200	0,300	0,100	796	17	398	8,4	637	14	318	6,7	478	10	239	5	318	6,7	159	3,4	239	5	119	2,5	159	3,4	80	1,7	80	1,7	40	0,9
100	0,150	0,050	796	8,4	398	4,2	637	6,7	318	3,4	478	5	239	2,5	318	3,4	159	1,7	239	2,5	119	1,3	159	1,7	80	0,9	80	0,9	40	0,5
50	0,075	0,025	796	4,2	398	2,1	637	3,4	318	1,7	478	2,5	239	1,3	318	1,7	159	0,9	239	1,3	119	0,7	159	0,9	80	0,5	80	0,5	40	0,5

Performance table SHE 75 screw Tr 140x20

Speed	Lifting speed		F = 750 kN				F = 500 kN				F = 400 kN				F = 300 kN				F = 200 kN				F = 100 kN				F = 50 kN			
n	N	L	N		L		N		L		N		L		N		L		N		L		N		L		N		L	
[1/min]	[m/min]		Nm	kW	Nm	kW	Nm	kW	Nm	kW	Nm	kW	Nm	kW	Nm	kW	Nm	kW	Nm	kW	Nm	kW	Nm	kW	Nm	kW	Nm	kW	Nm	kW
1000	1,667	0,556	1105	116	553	58	737	77	368	39	590	62	295	31	442	46	221	23	295	31	147	15	147	15	74	7,7	74	7,7	37	3,9
750	1,250	0,417	1105	87	553	43	737	58	368	29	590	46	295	23	442	35	221	17	295	23	147	12	147	12	74	5,8	74	5,8	37	2,9
500	0,833	0,278	1105	58	553	29	737	39	368	19	590	31	295	15	442	23	221	12	295	15	147	7,7	147	7,7	74	3,9	74	3,9	37	1,9
400	0,667	0,222	1105	46	553	23	737	31	368	15	590	25	295	12	442	19	221	9,3	295	12	147	6,2	147	6,2	74	3,1	74	3,1	37	1,5
300	0,500	0,167	1105	35	553	17	737	23	368	12	590	19	295	9,3	442	14	221	6,9	295	9,3	147	4,6	147	4,6	74	2,3	74	2,3	37	1,2
200	0,333	0,111	1105	23	553	12	737	15	368	7,7	590	12	295	6,2	442	9,3	221	4,6	295	6,2	147	3,1	147	3,1	74	1,5	74	1,5	37	0,8
100	0,167	0,056	1105	12	553	5,8	737	7,7	368	3,9	590	6,2	295	3,1	442	4,6	221	2,3	295	3,1	147	1,5	147	1,5	74	0,8	74	0,8	37	0,4
50	0,083	0,028	1105	5,8	553	2,9	737	3,9	368	1,9	590	3,1	295	1,5	442	2,3	221	1,2	295	1,5	147	0,8	147	0,8	74	0,4	74	0,4	37	0,2

B

Performance table SHE 100.1 screw Tr 160x20

Speed	Lifting speed		F = 1000 kN				F = 800 kN				F = 600 kN				F = 400 kN				F = 200 kN				F = 100 kN				F = 50 kN			
n	N	L	N		L		N		L		N		L		N		L		N		L		N		L		N		L	
[1/min]	[m/min]		Nm	kW	Nm	kW	Nm	kW	Nm	kW	Nm	kW	Nm	kW	Nm	kW	Nm	kW	Nm	kW	Nm	kW	Nm	kW	Nm	kW	Nm	kW	Nm	kW
1000	1,667	0,556	1770	185	983	103	1420	148	786	83	1060	112	590	62	707	74	393	42	354	37	197	21	177	19	99	11	88	9,3	49	5,2
750	1,250	0,417	1770	139	983	78	1420	112	786	62	1060	84	590	47	707	56	393	31	354	28	197	16	177	14	99	7,8	88	7	49	3,9
500	0,833	0,278	1770	93	983	52	1420	74	786	42	1060	56	590	31	707	37	393	21	354	19	197	11	177	9,3	99	5,2	88	4,6	49	2,6
400	0,667	0,222	1770	74	983	42	1420	60	786	33	1060	45	590	25	707	30	393	17	354	15	197	8,3	177	7,5	99	4,2	88	3,7	49	2,1
300	0,500	0,167	1770	56	983	31	1420	45	786	25	1060	34	590	19	707	23	393	13	354	11	197	6,2	177	5,6	99	3,1	88	2,8	49	1,6
200	0,333	0,111	1770	37	983	21	1420	30	786	17	1060	23	590	13	707	15	393	8,3	354	7,4	197	4,2	177	3,7	99	2,1	88	1,9	49	1,1
100	0,167	0,056	1770	19	983	11	1420	15	786	8,3	1060	11	590	6,2	707	7,4	393	4,2	354	3,7	197	2,1	177	1,9	99	1,1	88	1	49	0,5
50	0,083	0,028	1770	9,3	983	5,2	1420	7,4	786	4,2	1060	5,6	590	3,1	707	3,7	393	2,1	354	1,9	197	1,1	177	1	99	0,6	88	0,5	49	0,5

C

D

Max. duty ratio at 20 °C ambient temperature: 20 %/h 10 %/h static only (dynamic not permitted)

SHE range
Performance tables (screw jacks with Tr screw)

Performance table SHE 150.1 screw Tr 190x24

Speed	Lifting speed		F = 1500 kN				F = 1250 kN				F = 1000 kN				F = 750 kN				F = 500 kN				F = 250 kN				F = 100 kN			
n	N	L	N		L		N		L		N		L		N		L		N		L		N		L		N		L	
[1/min]	[m/min]		Nm	kW	Nm	kW	Nm	kW	Nm	kW	Nm	kW	Nm	kW	Nm	kW	Nm	kW	Nm	kW	Nm	kW	Nm	kW	Nm	kW	Nm	kW	Nm	kW
1000	1,263		2010	211			1680	175			1340	140			1010	105			670	70			335	35			134	14		
750	0,947		2010	158			1680	132			1340	105			1010	79			670	53			335	26			134	11		
500	0,632		2010	105			1680	88			1340	70			1010	53			670	35			335	18			134	7		
400	0,505		2010	84			1680	70			1340	56			1010	42			670	28			335	14			134	5,6		
300	0,379		2010	63			1680	53			1340	42			1010	32			670	21			335	11			134	4,2		
200	0,253		2010	42			1680	35			1340	28			1010	21			670	14			335	7			134	2,8		
100	0,126		2010	21			1680	18			1340	14			1010	11			670	7			335	3,5			134	1,4		
50	0,063		2010	11			1680	8,8			1340	7			1010	5,3			670	3,5			335	1,8			134	0,7		

Performance table SHE 200.1 screw Tr 220x28

Speed	Lifting speed		F = 2000 kN				F = 1500 kN				F = 1000 kN				F = 750 kN				F = 500 kN				F = 250kN				F = 100 kN			
n	N	L	N		L		N		L		N		L		N		L		N		L		N		L		N		L	
[1/min]	[m/min]		Nm	kW	Nm	kW	Nm	kW	Nm	kW	Nm	kW	Nm	kW	Nm	kW	Nm	kW	Nm	kW	Nm	kW	Nm	kW	Nm	kW	Nm	kW	Nm	kW
1000	on request																													
750																														
600																														
500																														
300																														
100																														
50																														

Pfaff underfloor lifting system with SHE 25 worm gear screw jacks designed according to DIN EN 1493

SHE range
Technical drawings SHE: Type 1

A

B

C

D

Technical drawings SHE: Type 1, Standard, Part 1

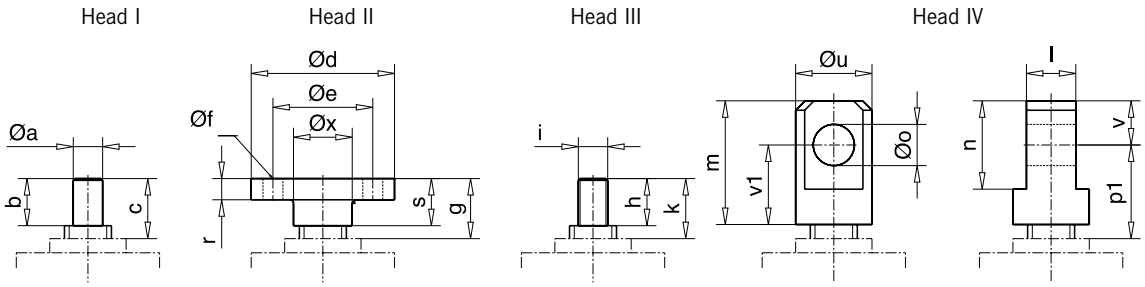

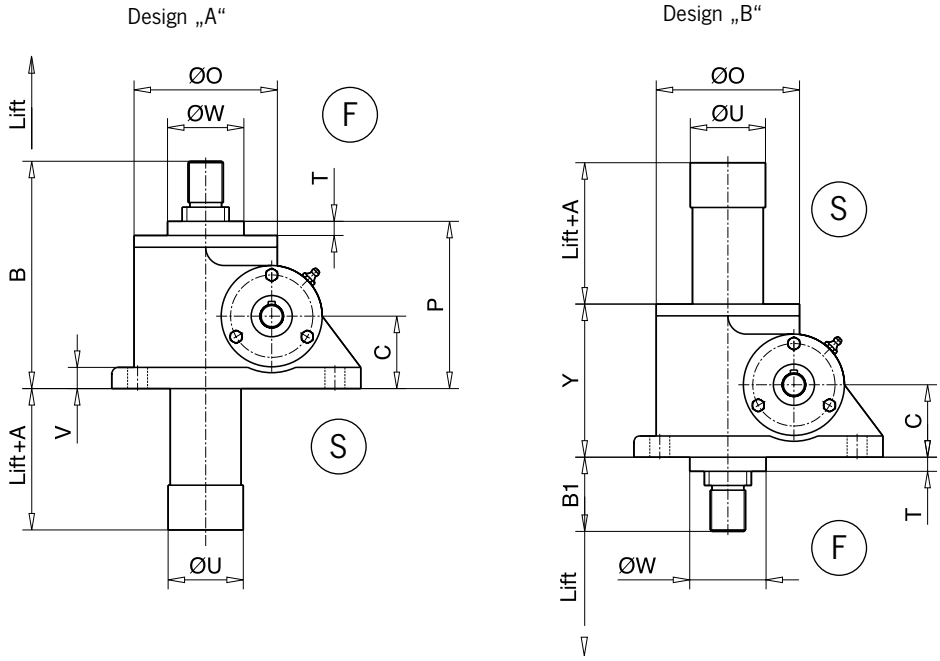

Size 1.1 – Size 35

Size 0,5

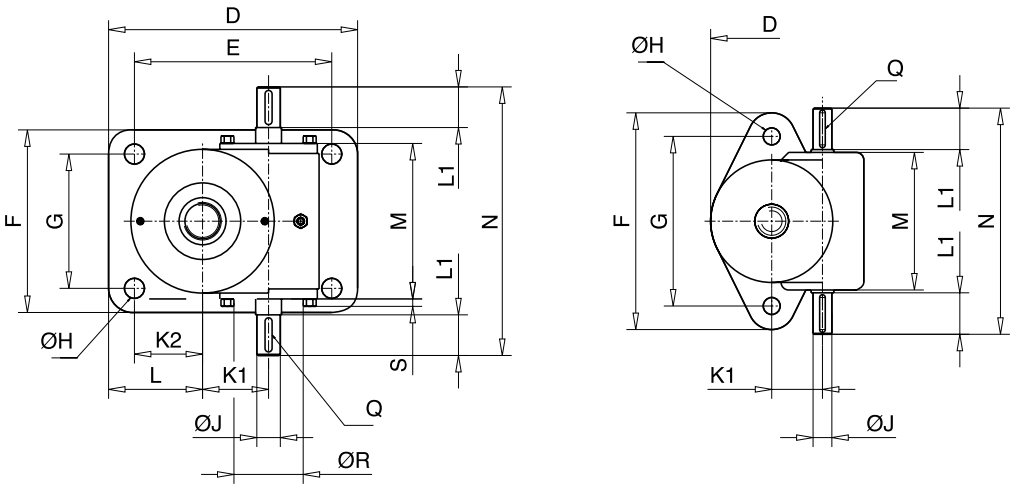

F = Guide ring, S = Protection tube

CAD & go

SHE range
Dimensions: Type 1

Dimensions: Type 1, Standard, Part 1								
Size	0,5	1.1	3.1	5.1	15.1	20.1	25	35
Screw	Tr 18x6	Tr 24x5	Tr 30x6	Tr 40x7	Tr 60x12	Tr 70x12	Tr 90x16	Tr 100x16
A	20	20	20	20	20	20	20	20
B	105,5	124	150,5	193	230	256	317	350
B1	35,5	54	53,5	63	80	80	100	110
C	32	35	45	61,5	70	87	102	115
D	81,5	150	165	212	235	295	350	430
E	-	130	135	168	190	240	280	360
F	115	100	120	155	200	215	260	280
G	90	80	90	114	155	160	190	210
Ø H	9	9	14	17	21	28	35	35
Ø J k6	10	14	16	20	25	28	34	38
K 1	27	36	45,2	56,2	66,8	72,5	97	120
K 2	-	58	50	58	63,5	95	95	135
L	32,5	68	65	80	86	122,5	130	170
L 1	22	18	-	-	47	52	60	80
M	73	100	110,5	132	185	213,5	221	265
N	120	140	190	228	280	322	355	430
Ø O	65	88	98	122	150	185	205	260
P	75,5	79	105,5	142	156	182	225	250
Q	3x3x20	5x5x16	5x5x32	6x6x32	8x7x40	8x7x45	10x8x50	10x8x70
Ø R	-	-	38	55	-	72	80	100
S	-	-	5,5	6	-	6	10	10
T	5,5	9	8,5	12	6,5	6	8	10
Ø U	29	40	49	64	81	88	120	139
V	10	13	12	18	16	20	25	30
Ø W	36	52*	48	65	80	100	130	150
Y	70	79	97	130	150	176	217	240
Head I								
Ø a k6	18h9	15	20	25	40	50	70	80
b	20	24	30	40	50	54	63	80
c	30	45	45	51	74	74	92	100
Head II								
Ø d	65	72	98	122	150	185	205	260
Ø e	45	50	75	85	105	140	155	200
Ø f	4xØ7	4xØ9	4xØ14	4xØ17	4xØ21	4xØ26	4xØ27	4xØ33
g	30	45	45	51	74	74	92	100
r	8	10	12	18	20	20	25	30
s	20	25	30	40	50	54	63	80
Ø x	18	30	40	50	65	90	100	130
Head III								
h	15	24	30	39	50	54	63	80
i	M 18x1,5	M 16x1,5	M 22x1,5	M 30x2	M 40x3	M 56x3	M 70x3	M 80x3
k	30	45	45	51	74	74	92	100
Head IV								
l –0,2	20	25	30	42	60	75	90	105
m	50	60	70	105	130	150	175	220
n	30	40	50	75	100	120	140	160
Ø o H8	15	20	25	35	50	60	70	80
p1	50	60	60	79	104	110	134	160
Ø u	30	40	50	65	90	110	130	150
v1	35	40	45	67,5	80	90	105	140
v	15	20	25	37,5	50	60	70	80

*Only design B

SHE range
Technical drawings SHE: Type 1

A

Technical drawings SHE: Type 1, Standard, Part 2

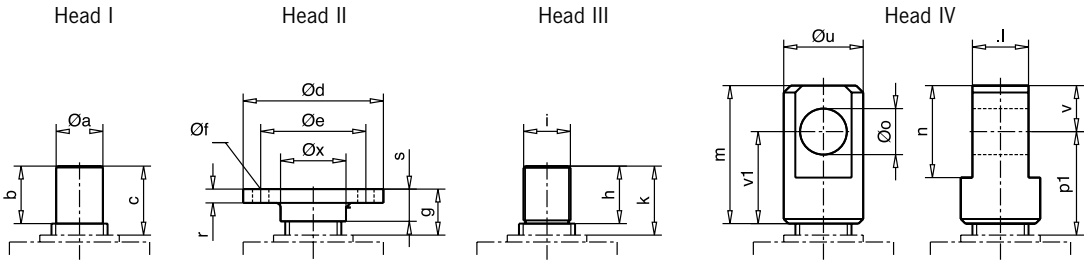

Design „A“ **Size 50.1 – Size 75** Design „B“

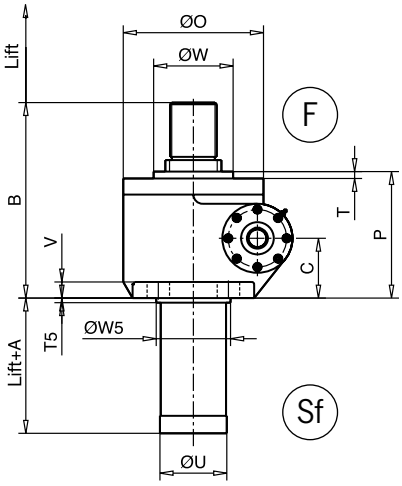

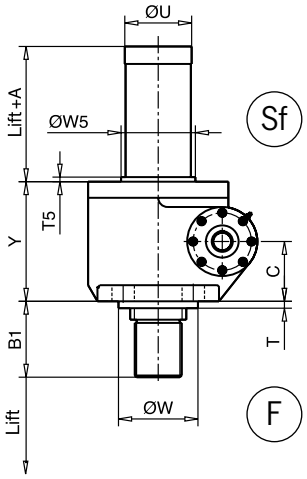

Design „A“ **Size 100.1 – Size 200.1** Design „B“

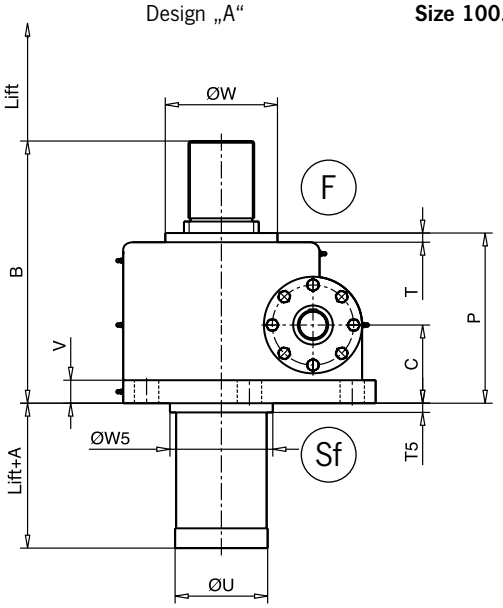

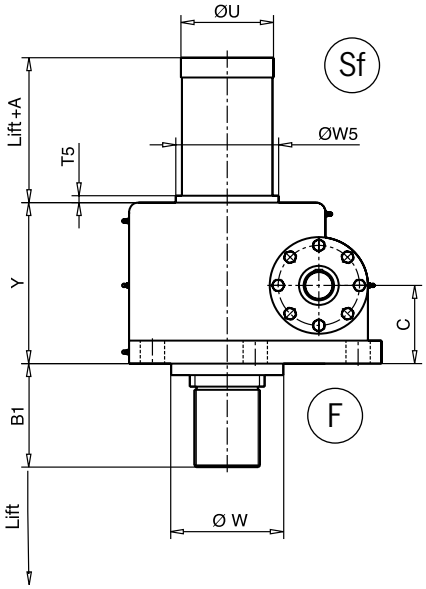

F = Guide ring, Sf = Protection tube with guide ring

CAD & go

SHE range
Dimensions: Type 1

Size 50.1

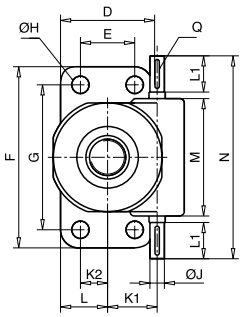

Size 75

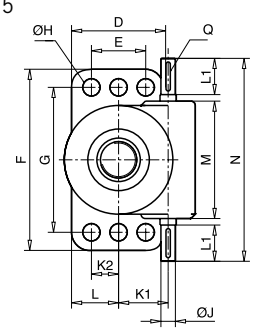

Size 100.1

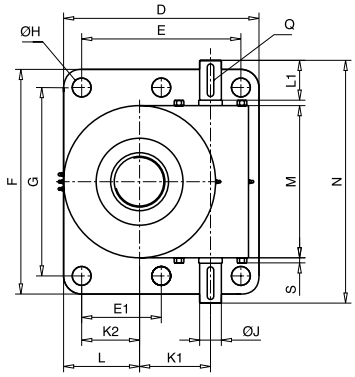

Size 150.1 and 200.1

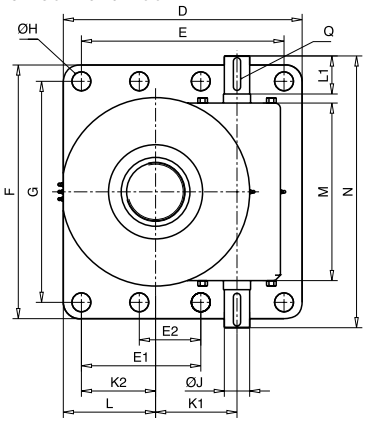

Dimensions: Type 1, Standard, Part 2

Size	50.1	75	100.1	150.1	200.1
Screw	Tr 120x16	Tr 140x20	Tr 160x20	Tr 190x24	Tr 220x28
A	20	80	65	80	125
B	425	485	570	675	675
B1	165	175	220	230	300
C	130	155	170	194	185
D	260	330	540	660	780
E	150	225	440	560	660
E1	-	-	220	330	330
E2	-	-	-	170	-
F	500	540	620	700	800
G	400	455	520	610	710
Ø H	4xØ48	6xØ45	6xØ52	8xØ52	6xØ45
Ø J	40 k6	60 m6	60 m6	70 m6	75 k6
K 1	137	160	196	225	280
K 2	75	112.5	160	210	260
L	130	165	210	255	320
L 1	100	110	110	110	130
M	324	360	420	490	555
N	560	600	670	710	830
Ø O	290	375	420	510	640
P	275	335	355	445	440
Q	12x8x80	18x11x100	18x11x90	20x12x90	20x12x110
S	-	-	14	-	-
T	15	25	15	20	75
T5	10	25	20	20	40
Ø U	143	220	198	220	299
V	35	40	50	60	60
Ø W	170	265	182	300	350
Ø W5	170	265	220	245	320
Y	260	310	350	424	365
Head I					
Ø a k6	100	110	140	160	on request
b	125	125	175	200	
c	150	150	200	230	
Head II					
Ø d	300	370	370	400	420
Ø e	225	270	280	310	310
Ø f	4xØ35	6xØ45	6xØ52	8xØ52	8xØ38
g	100	150	150	180	235
r	30	75	75	90	100
s	70	125	125	150	150
Ø x	140	200	200	220	220
Head III					
h	125	125	175	200	on request
i	M 100x5	M 120x6	M 140x6	M 160x6	
k	150	150	200	230	
Head IV					
l	120-0.2	140-0,2	160-0,3	180-0,3	on request
m	300	360	360	400	
n	200	240	280	320	
Ø o H8	100	120	140	160	
p1	225	265	245	270	
Ø u	170	200	220	260	
v1	200	240	220	240	
v	100	120	140	160	

SHE range
Technical drawings and dimensions

A

B

C

D

2nd Guide ring Sf

A 2nd guide ring should be provided on the SHE, if on-site guides are not possible and if restoring forces from a swivel movement or lateral forces cannot be excluded.

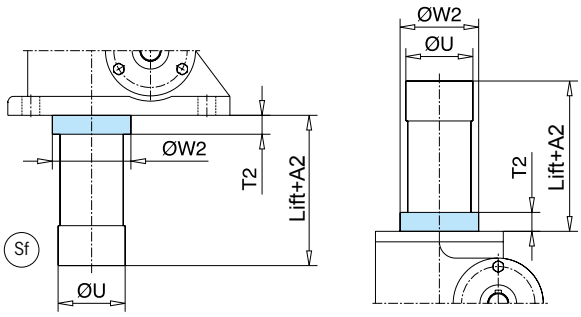

Size	A2	T2	ØW2	ØU
0,5	32	11,5	36	29
1.1	32	9	52*	40
3.1	40	20	60	49
5.1	43	18	75	64
15.1	42	18	95	81
20.1	55	31	100	88
25	65	40	130	120
35	60	40	150	139
50.1	Standard always with 2nd guide ring			143
75				220
100.1				198
150.1				220
200.1				299

*Only design A

With added-on limit switches Sm/Si

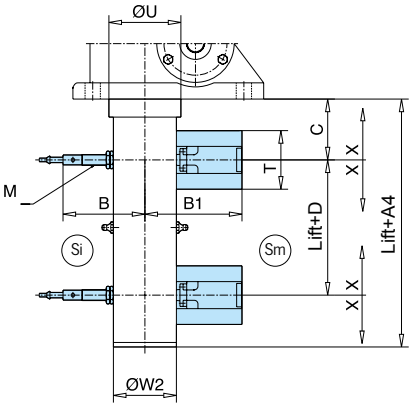

Size	A2	B	B1	C	D	T	M	ØU	ØW2	X
1.1	on request									
3.1	170	100	106	65	25	58	12x1	75	60,3	±10
5.1	175	107	115	70	25	58	12x1	95	76,1	±10
15.1	185	114	122	75	30	58	12x1	110	88,9	±10
20.1	195	131	130	80	40	58	12x1	125	114,3	±10
25	225	141	137	90	50	65	18x1	150	133	±10
35	on request									
50.1										
75	204	171	178	75	70	58	18x1	265	219,1	±10
100.1/150.1/200.1 on request										

All sizes are prepared for mechanical (Sm) and inductive (Si) operating limit switches. Limit switches are not included in the scope of delivery.
Technical data see chapter „Accessories“!

Anti-Turn device V

In order to ensure a linear movement, the screw must be secured against rotation. This can be done on site or by means of an anti-rotation device on the SHE by means of a square tube.

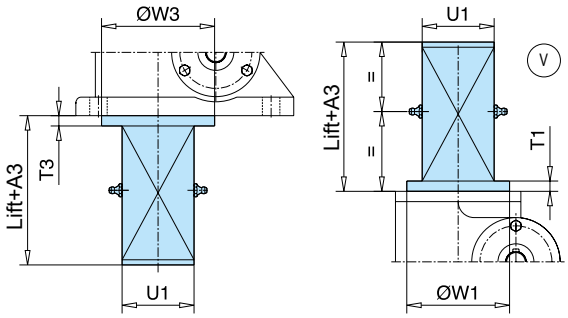

Size	A3	T3	ØW3	A1	T1	ØW1	U1
0,5	65	9	52	60	-	-	30x30
1.1	74	8	80	74	8	80	40x40
3.1	85	8	70	77	-	-	50x50
5.1	95	10	110	85	-	-	80x80
15.1	115	15	130	100	-	-	90x90
20.1	100	20	160	100	20	160	100x100
25	110	20	180	110	20	160	120x120
35	115	20	200	115	20	160	140x140
50.1	158	15	240	158	15	240	180x180
75	170	20	300	170	20	300	220x220
100.1	170	10	300	170	15	300	200x200
150.1	210	20	380	210	20	380	260x260
200.1	on request						

SHE range
Technical drawings and dimensions

Anti-turn device Vm/Vi with added-on limit switches

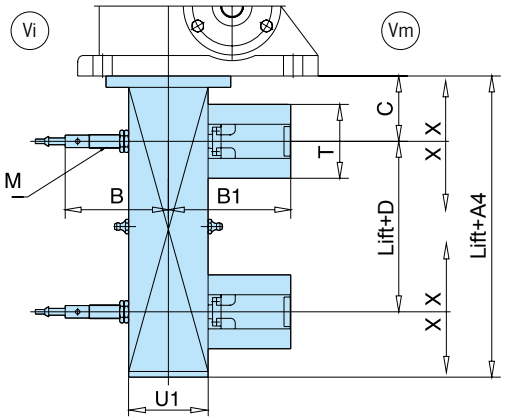

All sizes are prepared for mechanical (Vm) and inductive (Vi) operating limit switches.
Limit switches are not included in the scope of delivery.

Size	A4	B	B1	C	D	T	M	U1	X
0,5	on request								
1.1									
3.1	130	95	105	60	25	58	12x1	50x50x2	±10
5.1	130	102	112	55	25	58	12x1	80x80x3	±10
15.1	155	111	116	80	30	58	12x1	90x90x6	±10
20.1	180	130	131	80	40	68	18x1	110x110x5	±10
25	210	145	145	90	50	68	18x1	140x140x6	± 0
35	on request								
50.1									
75	220	171	178	75	90	58	18x1	220x220x10	±10
100.1/150.1/200.1 on request									

Ind. proximity switch Vi	Mechanical limit switch Vm
Technical data see chapter „Accessories"!	

With short safety nut SFM-O

The short safety nut significantly increases the operational safety of the drive elements by absorbing the axial load in the event of a main nut fracture. At the same time, the safety nut can be used to check the wear of the main nut exactly, since the distance between the two nuts changes with increasing wear. In the case of worm gear screw jacks with safety nuts the main load direction (tensile or compression load) and the installation position must always be taken into account, as only a consistently arranged safety nut can take up the load.

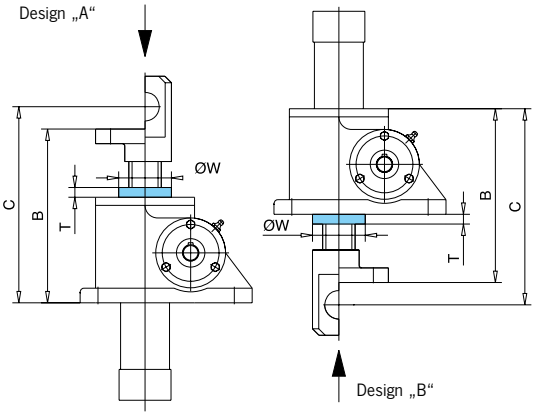

SHE type 1, compression load

Size	B	C	T*	ØW
1.1	on request			
3.1	150,5	165,5	2	45
5.1	193	220,5	2	55
15.1	230	260	3	76
20.1	262	292	3	86
25	317	359	3,5	112
35	355	415	15	138
50.1/75/100.1/150.1/200.1 on request				

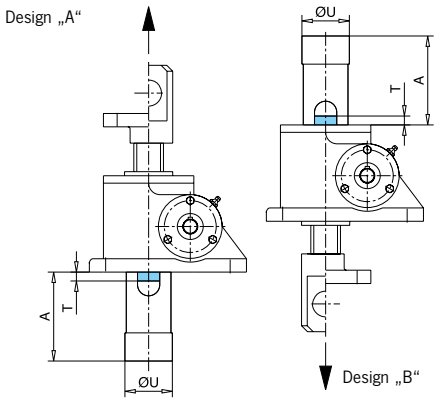

SHE type 1, tensile load

Size	A	T*	ØU
1.1	on request		
3.1	Lift + 20	2	61
5.1	Lift + 40	2	81
15.1	Lift + 20	3	93
20.1	Lift + 20	3	119
25	Lift + 20	3,5	145
35	Lift + 45	4	173
50.1/75/100.1/150.1/200.1 on request			

*Corresponds to new condition; if „T = 0", supporting and safety nut must be repaired.

SHE range
Technical drawings and dimensions

With long safety nut SFM-E/SFM-D (DGUV V17/18 and DGUV R100-500, chap. 2.10)

When using worm gear screw jacks in theater stages (DGUV V17/18), lifting platforms (DGUV R100-500, chap. 2.10) or lifting systems where there is a risk of injury to persons, the screw jacks are designed in accordance with the current regulations. Additional components ensure, among other things, fall protection (self-locking spindles and/or mechanical safety brakes in the drive) and, if required, the synchronous direction of rotation.

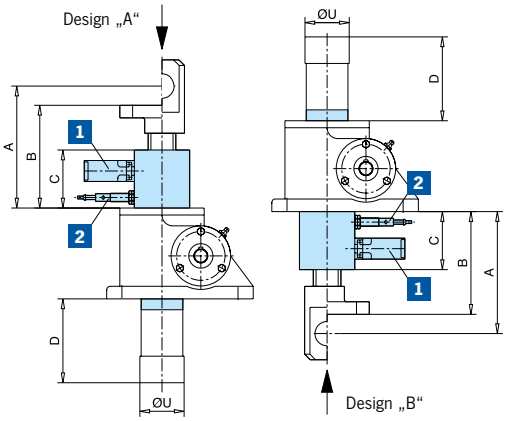

SHE type 1, compression load

Size	A	B	C	D	ØU
1.1	on request				
3.1	140	125	80	Hub + 60	65
5.1	161,5	134	83	Hub + 70	65
15.1	201,5	171,5	87,5	Hub + 70	83
20.1	201	171	91	Hub + 70	115
25	264	222	130	Hub + 83	160
35/50.1/75/100.1/150.1/200.1 on request					

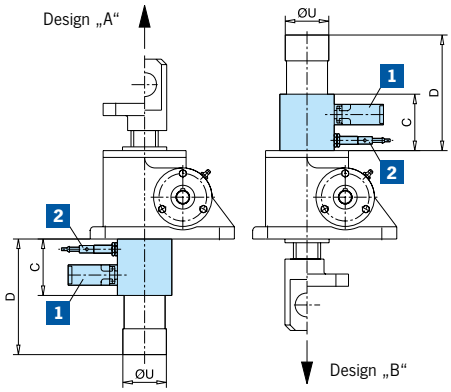

SHE type 1, tensile load

Size	A	B	C	D	ØU
Size on request					

All sizes are prepared for mechanical and inductive operating limit switches. Limit switches are not included in the scope of delivery.

Mechanical limit switch Vm 1	Ind. proximity switch Vi 2
Technical data and dimensions see chapter „Accessories“!	

SHE range
Technical drawings and dimensions

Swiveling configuration P/Pe, Q/Qe

In order to allow worm gear screw jacks to carry out swiveling and tipping movements, the drive elements must be secured at two points and permitted to move. This can be done using head IV (see page 117, Accessories swivel plates) on both screw ends or an articulated head. The bending moment resulting from the swiveling motion should be minimized as much as possible by means of low-friction articulations.

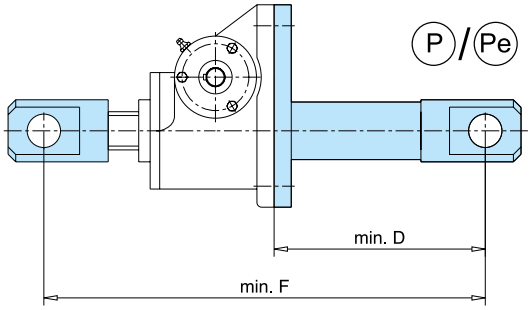

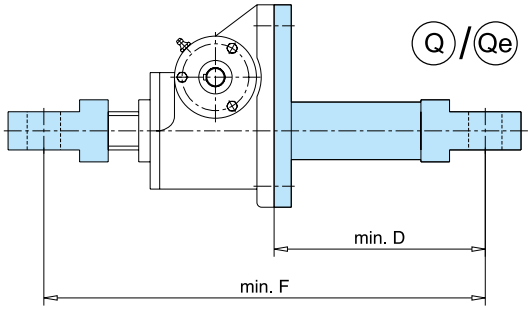

	Without end-limit stop P/Q		With end-limit stop Pe/Qe	
Size	D	F	D	F
1.1	on request			
3.1	Lift + 90	Lift + 255,5	Lift + 110	Lift + 275,5
5.1	Lift + 108	Lift + 329	Lift + 128	Lift + 349
15.1	Lift + 125	Lift + 385	Lift + 155	Lift + 415
20.1	Lift + 135	Lift + 427	Lift + 175	Lift + 467
25	Lift + 150	Lift + 509	Lift + 200	Lift + 559
35/50.1/75/100.1 on request				

Swiveling configuration with added-on limit switches Pm/Pi, Qm/Qi

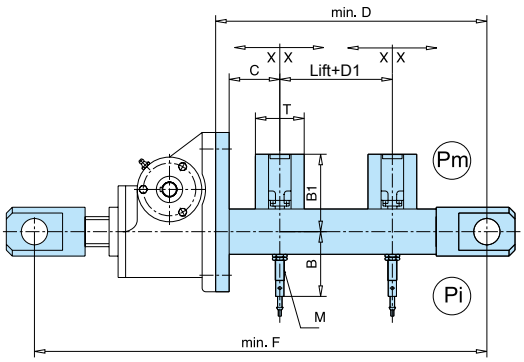

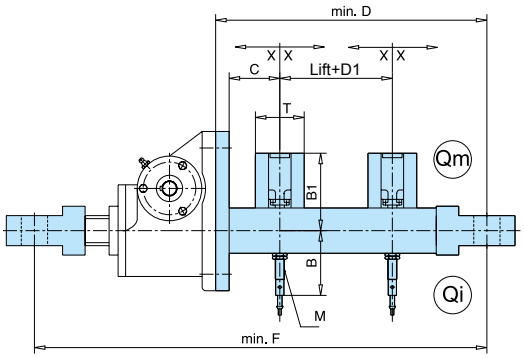

Size	B	B1	C	D	D1	F	M	T	X
3.1	91	100	48	Lift + 175	25	Lift + 340,5	12x1	58	± 10
5.1	103	80	48	Lift + 203	20	Lift + 424,5	12x1	58	± 10
15.1	106	115	48	Lift + 228	30	Lift + 488	12x1	58	± 10
0,5/1.1/20.1/2/35/50.1/75/100.1 on request									

All sizes are prepared for mechanical (Pm/Qm) and inductive (Pi/Qi) operating limit switches.
Limit switches are not included in the scope of delivery.

Mechanical limit switch Pm/Qm	Ind. proximity switch Pi/Qi
Technical data and dimensions see chapter „Accessories“!	

SHE range
Technical drawings SHE: Type 2

A

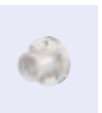

B

C

D

Technical drawings SHE: Type 2, Standard, Part 1

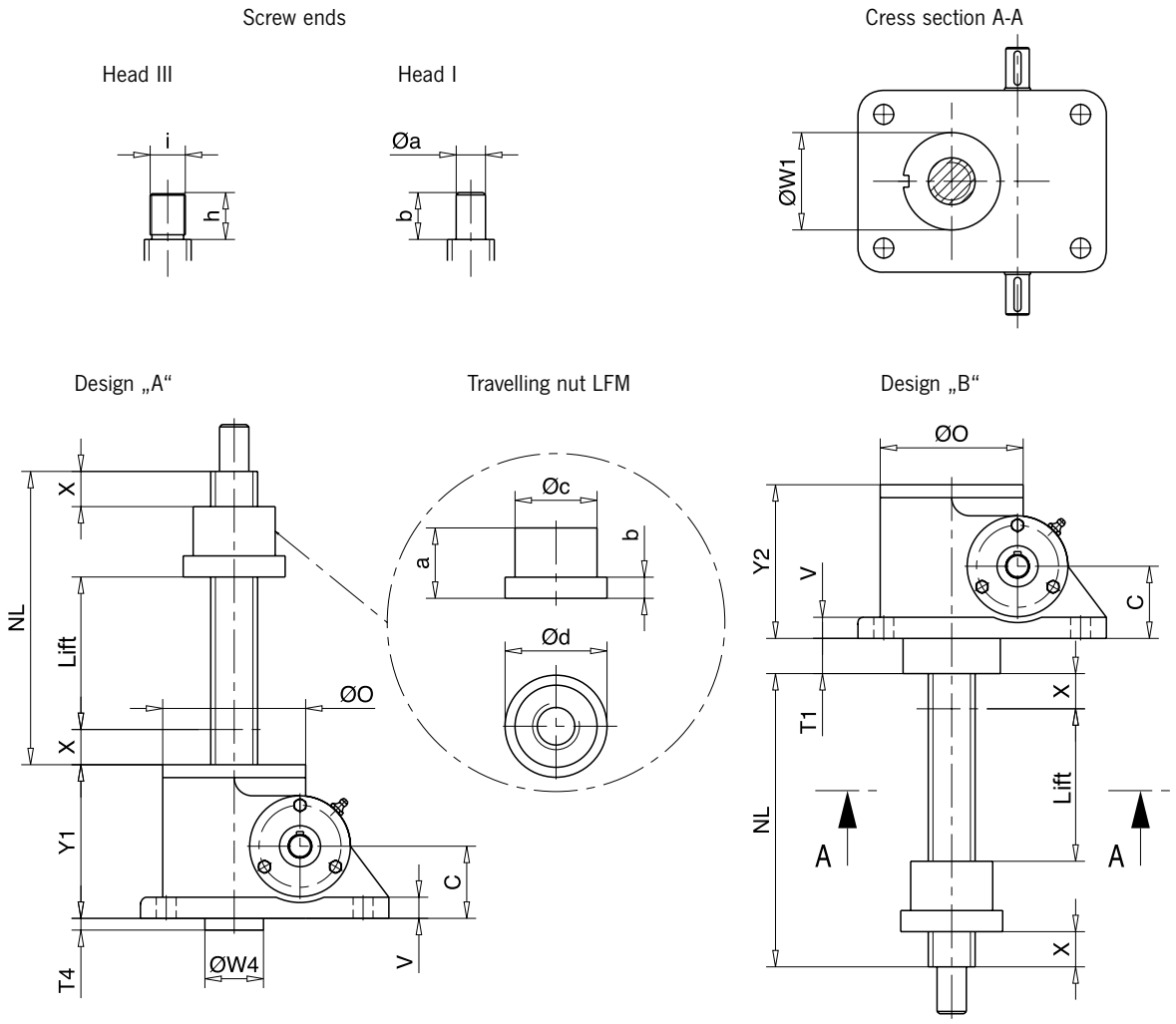

Size 1.1 – Size 35

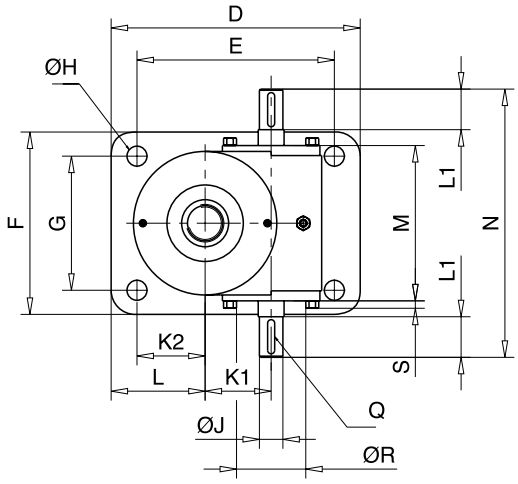

Size 0,5

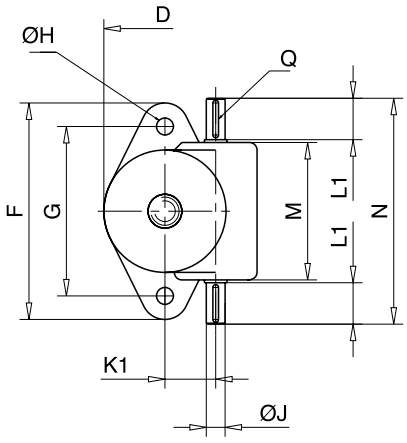

CAD & go

SHE range
Dimensions: Type 2

Dimensions: Type 2, Standard, Part 1								
Size	0,5	1.1	3.1	5.1	15.1	20.1	25	35
Screw	Tr 18x6	Tr 24x5	Tr 30x6	Tr 40x7	Tr 60x12	Tr 70x12	Tr 90x16	Tr 100x16
C	32	35	45	61,5	70	87	102	115
D	81,5	150	165	212	235	295	350	430
E	-	130	135	168	190	240	280	360
F	115	100	120	155	200	215	260	280
G	90	80	90	114	155	160	190	210
Ø H	9	9	14	17	21	28	35	35
Ø J k6	10	14	16	20	25	28	34	38
K 1	27	36	45,2	56,2	66,8	72,5	97	120
K 2	-	58	50	58	63,5	95	95	135
L	32,5	68	65	80	86	122,5	130	170
L 1	22	18	-	-	47	52	60	80
M	73	100	110,5	132	185	213,5	221	265
N	120	140	190	228	280	322	355	430
NL	Lift + 72	Lift + 80	Lift + 85	Lift + 100	Lift + 125	Lift + 150	Lift + 170	Lift + 205
Ø O	65	88	98	122	150	185	205	260
Q	3x3x20	5x5x16	5x5x32	6x6x32	8x7x40	8x7x45	10x8x50	10x8x70
Ø R	-	-	38	55	-	72	80	100
S	-	-	5,5	6	-	6	10	10
T 1	18,5	16	26,5	30	34	39	52	45
T 4	-	-	-	-	-	-	-	15
V	10	13	12	18	16	20	25	30
Ø W 1	45	52	68	83	110	140	160	180
Ø W 4	-	-	-	-	-	-	-	150
Safety X	20	20	20	20	25	25	25	30
Y 1	74	86	100	131	160	194	226	250
Y 2	70	79	97	130	150	176	217	255
Travelling nut LFM								
a	32	40	45	60	75	100	120	145
b	10	12	15	18	25	30	35	35
Ø c h9	40	45	50	70	90	90	130	150
Ø d	50	65	80	87	110	120	155	190
Head I								
Ø a k6	10	15	20	25	40	50	70	80
b	20	24	30	40	50	54	80	80
Head III								
h	20	24	30	39	50	54	80	80
i	M 10	M 16x1,5	M 22x1,5	M 30x2	M 40x3	M 56x3	M 70x3	M 80x3

SHE range
Technical drawings SHE: Type 2

A

B

C

D

Technical drawings SHE: Type 2, Standard, Part 2

Head I

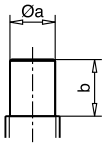

Head III

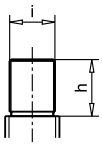

Travelling nut LFM

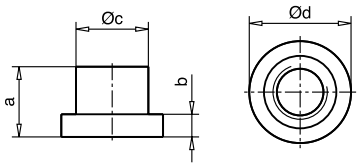

Design „A“ **Size 50.1 – Size 75** Design „B“

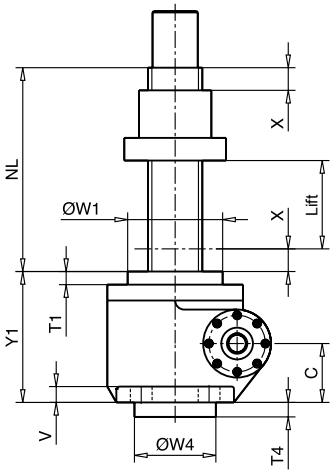

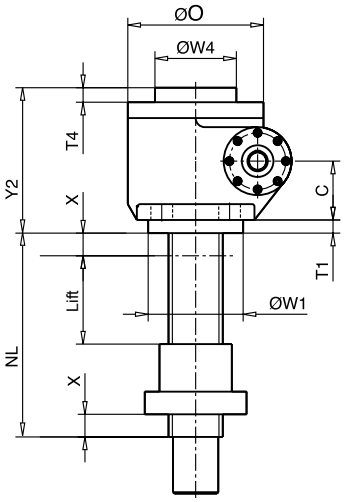

Design „A“ **Size 100.1 – Size 200.1** Design „B“

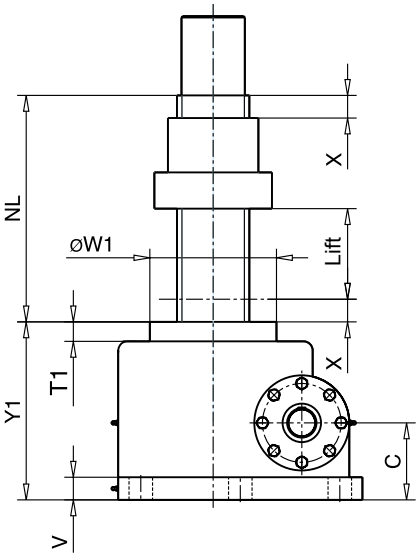

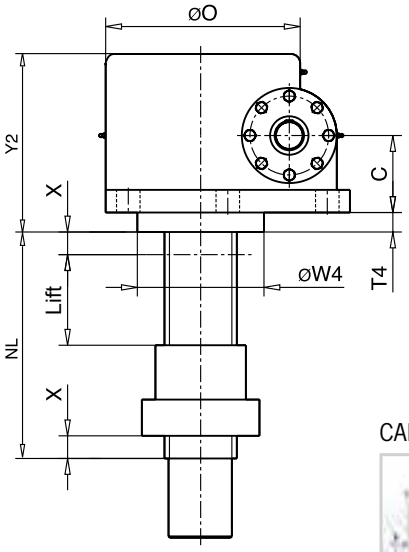

CAD & go

SHE range
Dimensions: Type 2

Size 50.1

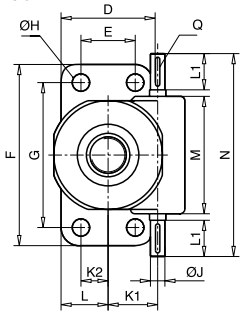

Size 75

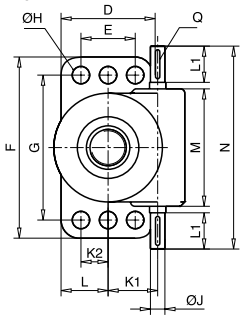

Size 100.1

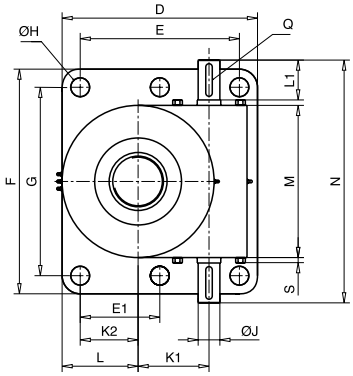

Size 150.1 und 200.1

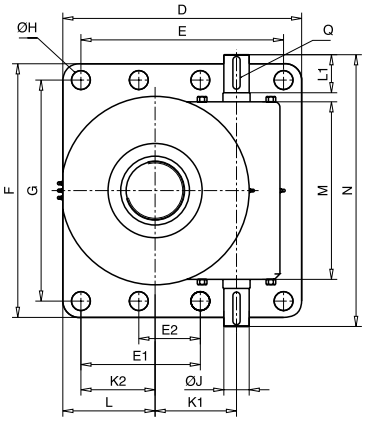

Dimensions: Type 2, Standard, Part 2

Size	50.1	75	100.1	150.1	200.1
Screw	Tr 120x16	Tr 140x20	Tr 160x20	Tr 190x24	Tr 220x28
C	130	155	170	194	185
D	260	330	540	660	780
E	150	225	440	560	660
E1	-	-	220	330	330
E2	-	-	-	170	-
F	500	540	620	700	800
G	400	455	520	610	710
Ø H	48	45	52	52	45
Ø J	40k6	60m6	60m6	70m6	75k6
K 1	137	160	196	225	280
K 2	75	112,5	160	210	260
L	130	165	210	255	320
L 1	100	110	110	110	130
M	324	360	420	490	555
N	560	600	670	710	830
NL	Hub + 255	Hub + 300	Hub + 300	Hub + 340	-
Ø O	290	375	420	510	640
Q	12x8x80	18x11x100	18x11x90	20x12x90	20x12x110
S	-	-	14	-	-
T 1	29	16	33	40	85
T 4	32	-	43	50	85
V	35	40	50	60	60
Ø W 1	210	274	280	340	330
Ø W 4	180	-	-	-	330
Safety X	50	50	50	50	50
Y 1	289	326	383	465	450
Y 2	289	326	393	475	450
Travelling nut LFM					
a	155	200	200	240	on request
b	50	70	80	90	
Ø c h9	160	180	200	240	
Ø d	225	250	260	300	
Head I					
Ø a k6	100	110	140	160	on request
b	125	125	175	200	
Head III					
h	125	125	175	200	on request
i	M 100x5	M 120x6	M 140x6	M 160x6	

SHE range
Technical drawings and dimensions

With short safety nut LFM-K

The short safety nut significantly increases the operational safety of the drive elements by absorbing the axial load in the event of a main nut fracture. At the same time, the safety nut can be used to check the wear of the main nut exactly, since the distance between the two nuts changes with increasing wear. In the case of worm gear screw jacks with safety nuts the main load direction (tensile or compression load) and the installation position must always be taken into account, as only a consistently arranged safety nut can take up the load.

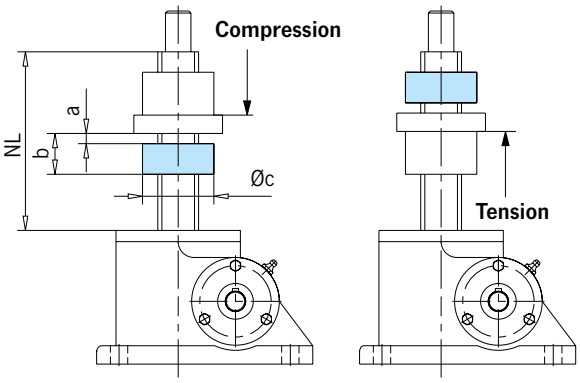

SHE type 2, compression and tensile load

Size	a*	b	Øc	NL
1.1	5	25	45	Lift + 105
3.1	10	35	50	Lift + 120
5.1	10	40	70	Lift + 140
15.1	10	60	90	Lift + 185
20.1	10	60	90	Lift + 210
25	15	80	130	Lift + 250
35	15	80	150	Lift + 285
50.1	15	80	160	Lift + 335
75	on request			
100.1	15	95	200	Lift + 395
150.1	20	120	240	Lift + 460
200.1	on request			

*Corresponds to new condition

With long safety nut LFM-E (DGUV V17/18 and DGUV R100-500, chap. 2.10)

When using worm gear screw jacks in theater stages (DGUV V17/18), lifting platforms (DGUV R100-500, chap. 2.10) or lifting systems where there is a risk of injury to persons, the screw jacks are designed in accordance with the current regulations.

Additional components ensure, among other things, fall protection (self-locking spindles and/or mechanical safety brakes in the drive) and, if required, the synchronous direction of rotation.

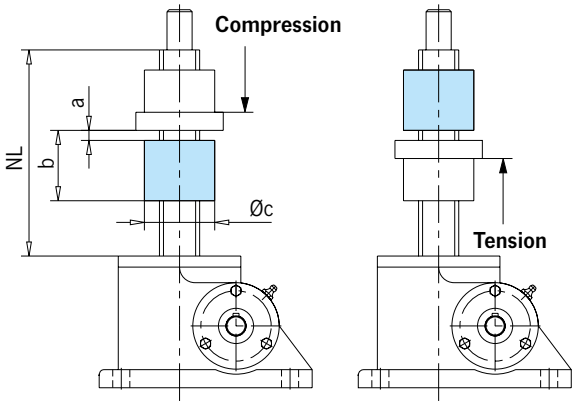

Illustration without limit switch

SHE type 2, compression and tensile load

Size	a*	b	Øc	NL
1.1	5	45	45	Lift + 125
3.1	10	55	50	Lift + 140
5.1	10	70	70	Lift + 170
15.1	10	85	90	Lift + 210
20.1	10	110	90	Lift + 260
25	15	135	130	Lift + 305
35	15	160	150	Lift + 335
50.1	15	170	160	Lift + 425
75	on request			
100.1	15	215	200	Lift + 515
150.1	20	260	240	Lift + 600
200.1	on request			

*Corresponds to new condition

All sizes are prepared for mechanical operating limit switches.
Limit switches are not included in the scope of delivery.

Mechanical limit switch
Technical data and dimensions see chapter „Accessories“!

For further travelling nut designs, see page 94-97

Screw jacks
Application

Reference example

The SHE-series worm gear screw jacks from Pfaff-silberblau ensure reliable operation in the latest pavers of the global mechanical engineering company. Pavers are used for the mechanical laying of mastic asphalt and thus enable large-scale paving on car parks, bridges, roads, footpaths, multi-storey car parks and halls.

Only two worm gear screw jacks are required to handle the forces of 400 kN produced during the mechanical laying of mastic asphalt. The screw jacks featuring self-locking, grease-lubricated trapezoidal screws can be positioned very precisely at speeds of 150 mm/min thanks to a high ratio (32:1) and a stroke of 0.5 mm per revolution.

A Pfaff-silberblau SHE worm gear screw jack with a stroke of 1300 mm is located on each side of the paver or chassis. The B configuration (screw-on-sided screw) ensures optimum load distribution and offers good mounting options. For example, the travelling nut can be easily integrated into the customer-supplied receptacle, whilst serving as the linear guide with optimal (tensile) loading direction. A flexible protection boot and the robust housing reliably protect the screws against the effects of weather and dirt ingress in the harsh conditions of asphalt laying

Image source: Linnhoff & Henne

SHE range
Mounting positions, shaft/attachment side

A

SHE range: Design A

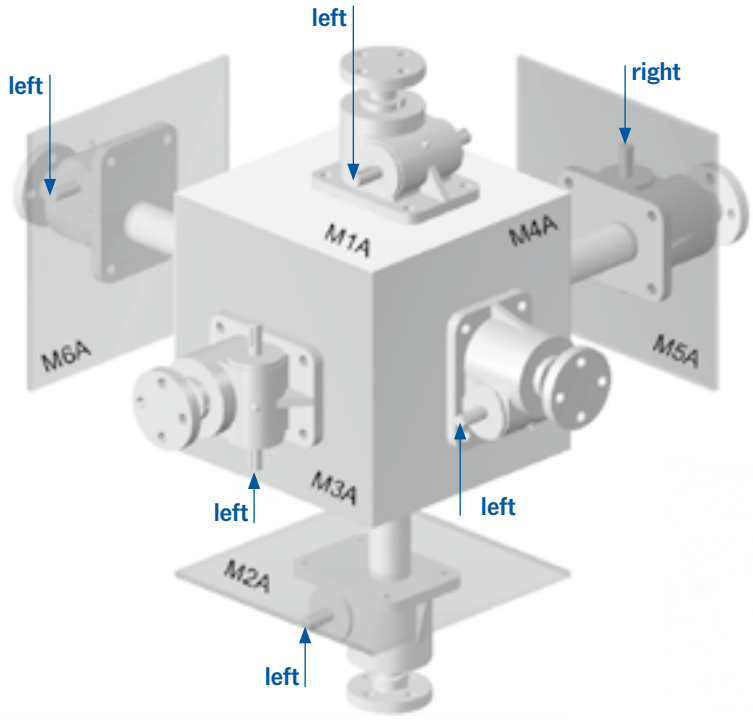

SHE range: Design B

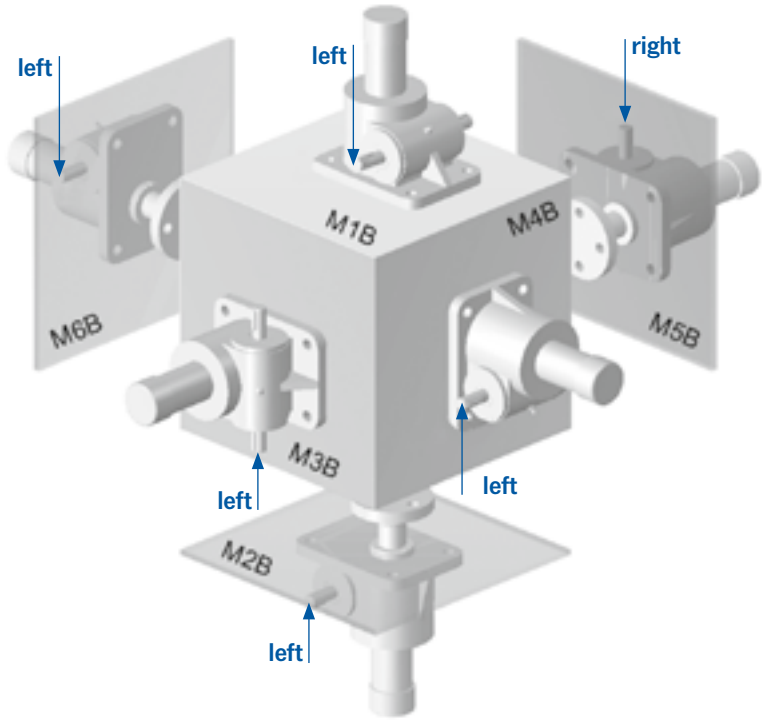

B

C

D

SHE range
Ordering details

S	H	E	-	☐	☐	☐	☐	-	☐	-	☐	☐	☐	☐	☐	x	☐	☐	-	☐	-	☐	☐	☐	-	☐	-	☐	☐	-	☐	-	☐	☐	☐	-	☐	☐	☐	☐	-	☐	☐	☐	☐	- ...
1			2					3								4			5	6		7			8		9		10		11				12					13				14	

No.	Description	
1	**Range**	**SHE**
2	**Size**	**0,5 / 1.1 / 3.1 / 5.1 / 15.1 / 20.1** **25 / 35 / 50.1 / 75.1 / 100.1 / 150.1 / 200.1**
3	**Configuration type**	**1** **2**
4	**Screw**	**Tr** (DxP) = Trapezoidal screw **Ku** (DxP) = Ball screw
5	**Ratio**	**N** **L**
6	**Design**	**A** **B**
7	**Mounting position**	**M1A / M1B / M2A / M2B / M3A / M3B** **M4A / M4B / M5A / M5B / M6A / M6B**
8	**Screw side variant**	**F** (Type 1) **0** (Type 2)
9	**Protective tube side variant**	**K / F / S / Sf / Se / Si / Sm / V / Ve / Vi / Vm** (Type 1) **0** (Type 2)
10	**Drive shaft**	**b** (both sides, Standard) **r** (right) **l** (left)
11	**Head**	**I / II / III / IV** (Type 1) **I / III** (Type 2)
12	**Lift**	**Lift in mm**
13	**Extension VL** **Usable length NL**	**VL in mm** (Type 1) **NL in mm** (Type 2)
14	**Options/Accessories**	According to specification, description or technical drawing (see chapter Accessories/Options)

Screw jacks

SSP stainless steel worm gear screw jacks with swivel brackets

A

B

C

D

Features and processing

Individually combinable quality: the newly developed SSP ranges of stainless steel worm gear screw jacks is based on a standardized modular system that can be combined individually. Designed for a load range from 5 t to 25 t, the ranges, made of high-quality stainless steel, can be used in a wide variety of mechanical lifting solutions.

Developed for the requirements of modern paper machines, we also see applications for the SSP worm gear screw jack in hydraulic steel engineering, the food industry and in potentially explosive environments.

4 different sizes

Lifting capacities from 50 to 250 kN

Input speeds up to 1500 min^{-1}

- Self-locking trapezoidal screw
- Complete stainless
- Grease-lubricated configuration
- Worm gear pairs in two ratio steps (normal „N“ and slow „L“)
- Worm-drive shaft tempered and ground

Possible usage according to directive 2014/34/EU (ATEX)

SSP range
Selection table

Selection table screw jack SSP with swivel brackets, stainless					
Size		5.1	15.1	20.1	25
Max. lifting capacity dynamic/static	[kN]	50/75	100/150	200/200	250/250
Max. tensile load dynamic/static	[kN]	50/75	99/99	178/200	250/250
Screw Tr[1)]		40x7	60x12	70x12	90x16
Ratio N		6:1	7 2/3:1	8:1	10 2/3:1
Lift per revolution for ratio N	[mm/per rev.]	1,167	1,565	1,5	1,5
Ratio L		24:1	24:1	24:1	32:1
Lift per revolution for ratio L	[mm/per rev.]	0,292	0,50	0,5	0,5
Max. drive capacity[2)] at T = 20 °C Duty cycle (ED) 20 %/h	[kW]	1,15	2,7	3,8	5
Max. drive capacity[2)] at T = 20 °C Duty cycle (ED) 10 %/h	[kW]	1,9	3,85	5,4	7,2
Screw efficiency rating	[%]	36,5	39,5	37,5	36,5
Overall efficiency for ratio N	[%]	24	27	24	22
Overall efficiency for ratio L	[%]	16	17	17	15
Torque, capacity, turning speed at 20 % ED/h and 20 °C		see performance tables page 42–43			
Screw torque at max. lifting power	[Nm]	153	702	1061	1725
Max. permitted drive-shaft torque	[Nm]	92	195	280	480
Mass moment of inertia J[3)] Ratio N type 1	[kg cm²]	2,234	5,256	11,93	23,42
Mass moment of inertia J[3)] Ratio N type 2	[kg cm²]	2,273	5,356	12,14	23,74
Mass moment of inertia J[3)] Ratio L type 1	[kg cm²]	1,696	4,081	9,427	19,59
Mass moment of inertia J[3)] Ratio L type 2	[kg cm²]	1,699	4,091	9,451	19,62
Max. permitted screw length for compression load	[mm]	see buckling diagrams page 152–153			
Housing material		1.4552			
Weight without stroke length and protection tube	[kg]	16,2	26,5	36	70,5
Screw weight per 100 mm stroke	[kg]	0,82	1,79	2,52	4,15
Amount of lubricant in worm gear	[kg]	0,35	0,9	2	1,3

Dimension plans type 1: page 44–45, type 2: on request

1) Max. permitted values for type 1 and Tr screw. Higher values are possible when using type 2 or Ku screw.
2) Referring to 100 mm screw length

Possible usage according to directive 2014/34/EU (ATEX)

SSP range
Performance tables (screw jacks with Tr screw)

A

SSP range (Stainless worm gear screw jacks)

Rotary speed, power requirement and permitted lifting speed for ratio N and L with single-start, **lifting (type 1) trapezoidal screw**. All performance data is expressed in terms of dynamic lifting capacity.

With duty ratio of < 10 %/h or configuration with rotating screw (type 2), the maximum permitted drive capacities can be increased. In this case, please consult our screw jack specialists.

Performance table SSP 5.1 screw Tr 40x7

static tensile and compression load max. 75 kN

Speed	Lifting speed		F = 50 kN				F = 40 kN				F = 30 kN				F = 20 kN				F = 10 kN				F = 5 kN				F = 3 kN			
n	N	L	N		L		N		L		N		L		N		L		N		L		N		L		N		L	
[1/min]	[m/min]		Nm	kW	Nm	kW	Nm	kW	Nm	kW	Nm	kW	Nm	kW	Nm	kW	Nm	kW	Nm	kW	Nm	kW	Nm	kW	Nm	kW	Nm	kW	Nm	kW
1500	1,75	0,438	38,7	6,08	14,5	2,28	30,9	4,86	11,6	1,82	23,2	3,65	8,7	1,37	15,5	2,43	5,8	0,91	7,7	1,22	2,9	0,5	3,9	0,6	1,5	0,2	1,9	0,3	0,7	0,2
1000	1,17	0,292	38,7	4,05	14,5	1,52	30,9	3,24	11,6	1,22	23,2	2,43	8,7	0,91	15,5	1,62	5,8	0,61	7,7	0,81	2,9	0,3	3,9	0,4	1,5	0,2	1,9	0,2	0,7	0,1
750	0,88	0,219	38,7	3,04	14,5	1,14	30,9	2,43	11,6	0,91	23,2	1,82	8,7	0,68	15,5	1,22	5,8	0,46	7,7	0,61	2,9	0,2	3,9	0,3	1,5	0,1	1,9	0,2	0,7	0,1
600	0,70	0,175	38,7	2,43	14,5	0,91	30,9	1,94	11,6	0,73	23,2	1,46	8,7	0,55	15,5	0,97	5,8	0,36	7,7	0,49	2,9	0,2	3,9	0,2	1,5	0,1	1,9	0,1	0,7	0,1
500	0,58	0,146	38,7	2,03	14,5	0,76	30,9	1,62	11,6	0,61	23,2	1,22	8,7	0,46	15,5	0,81	5,8	0,3	7,7	0,41	2,9	0,2	3,9	0,2	1,5	0,1	1,9	0,1	0,7	0,1
300	0,35	0,088	38,7	1,22	14,5	0,46	30,9	0,97	11,6	0,36	23,2	0,73	8,7	0,27	15,5	0,49	5,8	0,18	7,7	0,24	2,9	0,1	3,9	0,1	1,5	0,1	1,9	0,1	0,7	0,1
100	0,12	0,029	38,7	0,41	14,5	0,15	30,9	0,32	11,6	0,12	23,2	0,24	8,7	0,1	15,5	0,16	5,8	0,1	7,7	0,1	2,9	0,1	3,9	0,1	1,5	0,1	1,9	0,1	0,7	0,1
50	0,06	0,015	38,7	0,2	14,5	0,1	30,9	0,16	11,6	0,1	23,2	0,1	8,7	0,1	15,5	0,1	5,8	0,1	7,7	0,1	2,9	0,1	3,9	0,1	1,5	0,1	1,9	0,1	0,7	0,1

Performance table SSP 15.1 screw Tr 60x12

Speed	Lifting speed		F = 150 kN				F = 100 kN				F = 80 kN				F = 60 kN				F = 40 kN				F = 20 kN				F = 10 kN			
n	N	L	N		L		N		L		N		L		N		L		N		L		N		L		N		L	
[1/min]	[m/min]		Nm	kW	Nm	kW	Nm	kW	Nm	kW	Nm	kW	Nm	kW	Nm	kW	Nm	kW	Nm	kW	Nm	kW	Nm	kW	Nm	kW	Nm	kW	Nm	kW
1500	2,35	0,750	138,4	21,7	70,2	11	92,3	14,5	46,8	7,4	73,8	11,6	37,5	5,9	55,4	8,7	28,1	4,4	36,9	5,8	18,7	2,9	18,5	2,9	9,4	1,5	9,2	1,4	4,7	0,4
1000	1,57	0,500	138,4	14,5	70,2	7,4	92,3	9,7	46,8	4,9	73,8	7,7	37,5	3,9	55,4	5,8	28,1	2,9	36,9	3,9	18,7	2	18,5	1,9	9,4	1	9,2	1	4,7	0,2
750	1,17	0,375	138,4	10,9	70,2	5,5	92,3	7,2	46,8	3,7	73,8	5,8	37,5	2,9	55,4	4,3	28,1	2,2	36,9	2,9	18,7	1,5	18,5	1,4	9,4	0,7	9,2	0,7	4,7	0,2
600	0,94	0,300	138,4	8,7	70,2	4,4	92,3	5,8	46,8	2,9	73,8	4,6	37,5	2,4	55,4	3,5	28,1	1,8	36,9	2,3	18,7	1,2	18,5	1,2	9,4	0,6	9,2	0,6	4,7	0,1
500	0,78	0,250	138,4	7,2	70,2	3,7	92,3	4,8	46,8	2,5	73,8	3,9	37,5	2	55,4	2,9	28,1	1,5	36,9	1,9	18,7	1	18,5	1	9,4	0,5	9,2	0,5	4,7	0,1
300	0,47	0,150	138,4	4,3	70,2	2,2	92,3	2,9	46,8	1,5	73,8	2,3	37,5	1,2	55,4	1,7	28,1	0,9	36,9	1,2	18,7	0,6	18,5	0,6	9,4	0,3	9,2	0,3	4,7	0,1
100	0,16	0,050	138,4	1,4	70,2	0,7	92,3	1	46,8	0,5	73,8	0,8	37,5	0,4	55,4	0,6	28,1	0,3	36,9	0,4	18,7	0,2	18,5	0,2	9,4	0,1	9,2	0,1	4,7	0,1
50	0,08	0,025	138,4	0,7	70,2	0,4	92,3	0,5	46,8	0,2	73,8	0,4	37,5	0,2	55,4	0,3	28,1	0,1	36,9	0,2	18,7	0,1	18,5	0,1	9,4	0,1	9,2	0,1	4,7	0,1

Performance table SSP 20.1 screw Tr 70x12

Speed	Lifting speed		F = 200 kN				F = 160 kN				F = 120 kN				F = 100 kN				F = 75 kN				F = 50 kN				F = 25 kN			
n	N	L	N		L		N		L		N		L		N		L		N		L		N		L		N		L	
[1/min]	[m/min]		Nm	kW	Nm	kW	Nm	kW	Nm	kW	Nm	kW	Nm	kW	Nm	kW	Nm	kW	Nm	kW	Nm	kW	Nm	kW	Nm	kW	Nm	kW	Nm	kW
1500	2,25	0,750	199	31,3	93,6	14,7	159,2	25,0	74,9	11,8	119,4	18,8	56,2	8,8	99,5	15,6	46,8	7,4	74,6	11,7	35,1	5,5	49,7	7,8	23,4	3,7	24,9	3,9	11,7	1,8
1000	1,50	0,500	199	20,8	93,6	9,8	159,2	16,7	74,9	7,8	119,4	12,5	56,2	5,9	99,5	10,4	46,8	4,9	74,6	7,8	35,1	3,7	49,7	5,2	23,4	2,5	24,9	2,6	11,7	1,2
750	1,13	0,375	199	15,6	93,6	7,4	159,2	12,5	74,9	5,9	119,4	9,4	56,2	4,4	99,5	7,8	46,8	3,7	74,6	5,9	35,1	2,8	49,7	3,9	23,4	1,8	24,9	2	11,7	0,9
600	0,90	0,300	199	12,5	93,6	5,9	159,2	10,0	74,9	4,7	119,4	7,5	56,2	3,5	99,5	6,3	46,8	2,9	74,6	4,7	35,1	2,2	49,7	3,1	23,4	1,5	24,9	1,6	11,7	0,7
500	0,75	0,250	199	10,4	93,6	4,9	159,2	8,3	74,9	3,9	119,4	6,3	56,2	2,9	99,5	5,2	46,8	2,5	74,6	3,9	35,1	1,8	49,7	2,6	23,4	1,2	24,9	1,3	11,7	0,6
300	0,45	0,150	199	6,3	93,6	2,9	159,2	5,0	74,9	2,4	119,4	3,8	56,2	1,8	99,5	3,1	46,8	1,5	74,6	2,3	35,1	1,1	49,7	1,6	23,4	0,7	24,9	0,8	11,7	0,4
100	0,15	0,050	199	2,1	93,6	1	159,2	1,7	74,9	0,8	119,4	1,3	56,2	0,6	99,5	1	46,8	0,5	74,6	0,8	35,1	0,4	49,7	0,5	23,4	0,2	24,9	0,3	11,7	0,1
50	0,08	0,025	199	1	93,6	0,5	159,2	0,8	74,9	0,4	119,4	0,6	56,2	0,3	99,5	0,5	46,8	0,2	74,6	0,4	35,1	0,2	49,7	0,3	23,4	0,1	24,9	0,1	11,7	0,1

B

C

D

Max. duty ratio at 20 °C ambient temperature: 20 %/h 10 %/h static only (dynamic not permitted)

SSP range
Performance tables (screw jacks with Tr screw)

Performance table SSP 25 screw Tr 90x16

Speed	Lifting speed		F = 250 kN				F = 200 kN				F = 160 kN				F = 120 kN				F = 100 kN				F = 75 kN				F = 50 kN			
n	N	L	N		L		N		L		N		L		N		L		N		L		N		L		N		L	
[1/min]	[m/min]		Nm	kW	Nm	kW	Nm	kW	Nm	kW	Nm	kW	Nm	kW	Nm	kW	Nm	kW	Nm	kW	Nm	kW	Nm	kW	Nm	kW	Nm	kW	Nm	kW
1000	1,50	0,500	271,3	28,4	132,6	13,9	217	22,7	106,1	11,1	173,6	18,2	84,9	8,9	130,2	13,6	63,7	6,7	108,5	11,4	53,1	5,6	81,4	8,5	39,8	4,2	54,3	5,7	26,5	2,8
750	1,13	0,375	271,3	21,3	132,6	10,4	217	17	106,1	8,3	173,6	13,6	84,9	6,7	130,2	10,2	63,7	5	108,5	8,5	53,1	4,2	81,4	6,4	39,8	3,1	54,3	4,3	26,5	2,1
600	0,90	0,300	271,3	17	132,6	8,3	217	13,6	106,1	6,7	173,6	10,9	84,9	5,3	130,2	8,2	63,7	4	108,5	6,8	53,1	3,3	81,4	5,1	39,8	2,5	54,3	3,4	26,5	1,7
500	0,75	0,250	271,3	14,2	132,6	6,9	217	11,4	106,1	5,6	173,6	9,1	84,9	4,4	130,2	6,8	63,7	3,3	108,5	5,7	53,1	2,8	81,4	4,3	39,8	2,1	54,3	2,8	26,5	1,4
300	0,45	0,150	271,3	8,5	132,6	4,2	217	6,8	106,1	3,3	173,6	5,5	84,9	2,7	130,2	4,1	63,7	2	108,5	3,4	53,1	1,7	81,4	2,6	39,8	1,3	54,3	1,7	26,5	0,8
100	0,15	0,050	271,3	2,8	132,6	1,4	217	2,3	106,1	1,1	173,6	1,8	84,9	0,9	130,2	1,4	63,7	0,7	108,5	1,1	53,1	0,6	81,4	0,9	39,8	0,4	54,3	0,6	26,5	0,3
50	0,08	0,025	271,3	1,4	132,6	0,7	217	1,1	106,1	0,6	173,6	0,9	84,9	0,4	130,2	0,7	63,7	0,3	108,5	0,6	53,1	0,3	81,4	0,4	39,8	0,2	54,3	0,3	26,5	0,1

Modular system

The SSP series is based on a standardized modular system that can be individually combined.

For upgrading individual screw jacks into complete drive systems, we offer a comprehensive range of accessories as stainless versions.

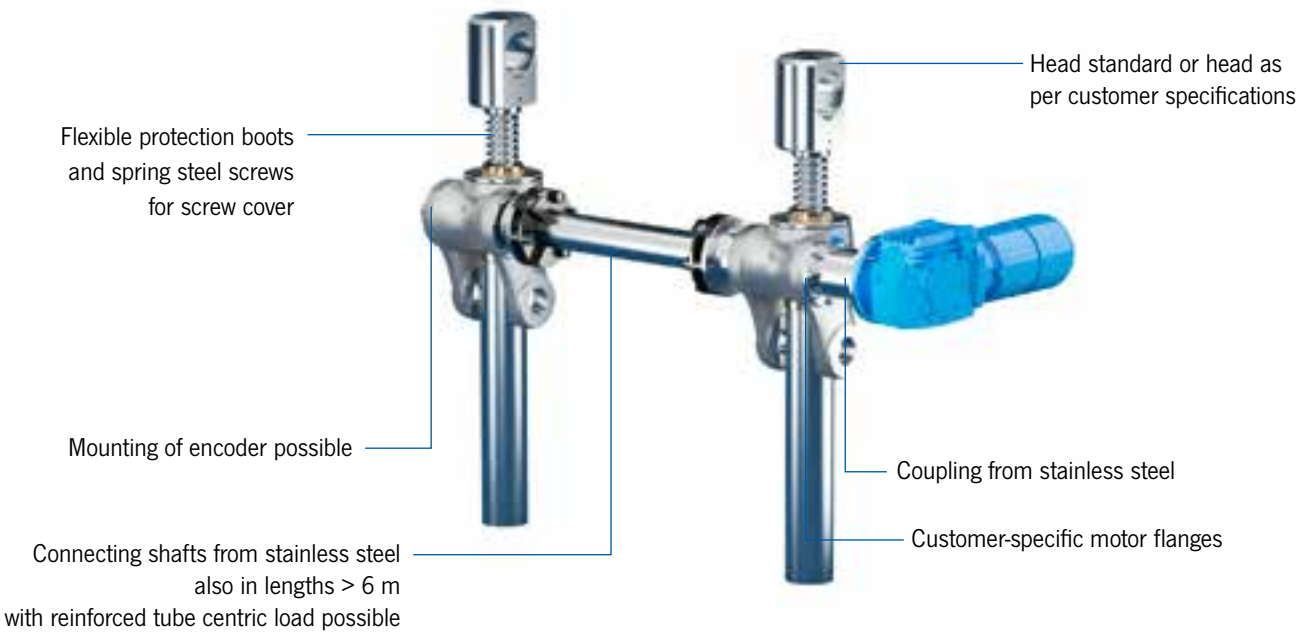

SSP range
Technical drawings: Type 1

A

B

C

D

Technical drawings SSP: Type 1, Standard

Head IV-SSP

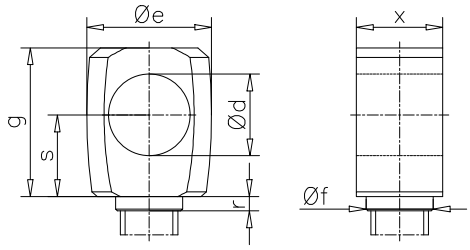

Head III

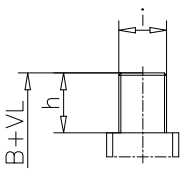

Head IV

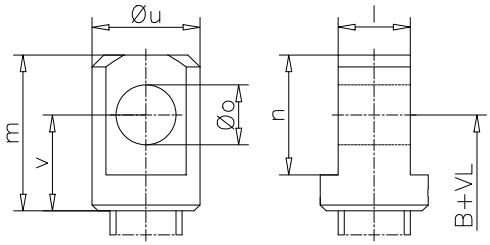

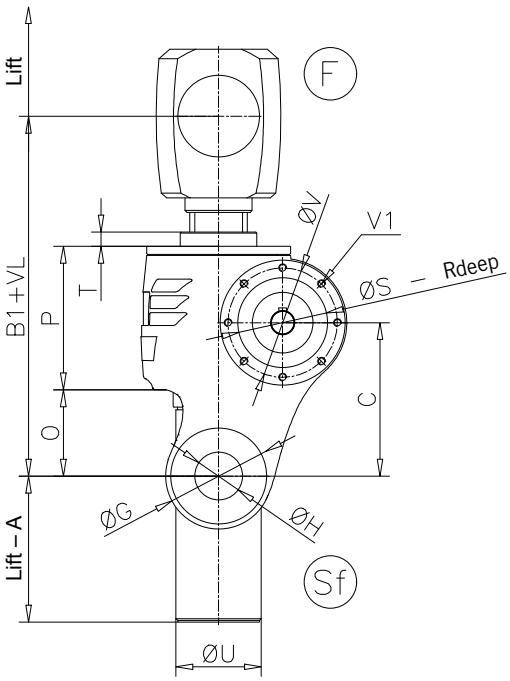

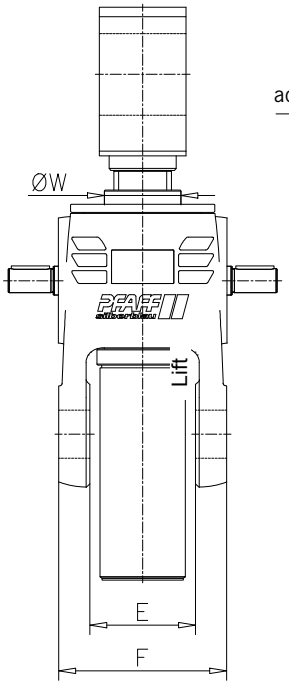

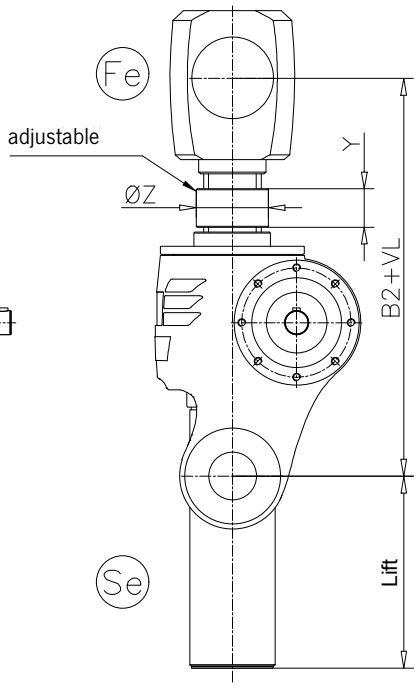

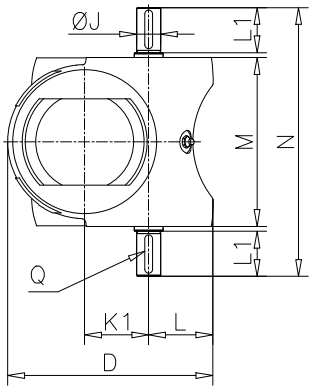

F = Guide ring
Fe = Guide ring and limit stop
Sf = Protection tube and guide ring
Se = Protection tube and limit stop
VL = Screw extension

CAD & go

SSP range
Dimensions: Type 1

Dimensions SSP: Type 1				
Size	5.1	15.1	20.1	25
Screw	Tr 40x7	Tr 60x12	Tr 70x12	Tr 90x16
A	45	48	43	28
C	150	160	190	190
D	177	215	258	306
E	80	110	141	160
F	140	175	235	230
Ø G	102	110	150	176
Ø H H7	50	50	85	80
Ø J k6	20	25	28	34
K 1	56,2	66,8	72,5	97
L	56	67	84,5	101
L 1	48,7	47	50	60
M	130,6	176	222	220
N	228	280	322	355
O	88,5	90	98	88
P	130	149,5	181	217
Q	6x6x32	8x7x40	8x7x45	8x7x40
R	4	5	5	5
Ø S H7	80	92	118	140
T	12	15	15	15
Ø U	60,3	88,9	101,6	133
Ø V	95	114	148	180
V 1	6xM6	8xM8	8xM10	12xM10
Ø W e8	65	80	100	130
Y	-	40	40	40
Ø Z	-	75	90	106
Head III				
B 1	281,5	325	369	403
B 2	-	365	409	443
h	39	50	54	63
i	M 30x2	M 40x3	M 56x3	M 70x3
Head IV - SSP				
B 1	-	375	405	455
B 2	-	415	445	495
Ø d H8	-	85	60	80
Ø e	-	130	110	150
Ø f	-	70	70	90
g	-	155	135	175
r	-	15	15	15
s	-	85	75	100
x	-	90	75	100
Head IV				
B 1	310	355	405	445
B 2	-	395	445	485
l-0,2	42	60	75	90
m	105	130	150	175
n	75	100	120	140
Ø o H8	35	50	60	70
Ø u	65	90	110	130
v	67,5	80	90	105

Dimensions type 2 on request

Screw jacks
Application

A

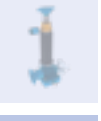

B

C

D

Reference example

Especially for applications in paper manufacture, the stainless-steel series of Pfaff-silberblau is ideal:

- Plate adjustment in refiners
- Lip adjustment and/or positioning
- For tensioning of strainer
- For tensioning of felt for the cover opening of the drying actuator
- As tambour lift
- To lift and lower the tambour

SSP range
Ordering details

S	S	P	-	☐	☐	☐	-	☐	-	☐	☐	☐	☐	x	☐	☐	-	☐	-	☐	☐	-	☐	☐	-	☐	-	☐	☐	☐	☐	☐	-	☐	☐	☐	☐	-	...
1				2				3						4				5		6			7			8			9						10				11	12

No.	Description	
1	**Range**	**SSP**
2	**Size**	**5.1 / 15.1 / 20.1 / 25**
3	**Configuration type**	**1**
4	**Screw**	**Tr** (DxP) = Trapezoidal screw
5	**Ratio**	**N** **L**
6	**Screw side variant**	**Fe / F**
7	**Protective tube side variant**	**Sf / Se**
8	**Drive shaft**	**b** (both sides) **r** (right) **l** (left)
9	**Head**	**III / IV SSP / IV**
10	**Lift**	**Lift in mm**
11	**Extension VL**	**VL in mm**
12	**Options/Accessories**	According to specification, description or technical drawing (see chapter Accessories/Options)

Screw jacks
MERKUR standard screw jacks

A

B

C

D

Features and processing

High flexibility: covering a load range from 0.25 t to 50 t, the MERKUR ranges is versatile in use. The ranges with cubic housing allows access on all sides and thus easy alignment of the screw jacks during installation. The MERKUR ranges is optimally used where high loads have to be positioned at medium duty cycles and low dynamics.

The MERKUR ranges impresses with its performance and application: the screw jacks allow and enable, for example, the (storm-)safe opening and closing of wind turbine maintenance hatches.

9 different sizes

Lifting capacities from 2.5 to 500 kN

Input speeds up to 1500 min^{-1}

- All-round configuration permits easier alignment
- Conforms to European manufacturers‘ standards for cubic shaped worm gear screw jacks
- Self-locking trapezoidal screw
- Grease-lubricated configuration
- Worm gear pairs in two ratio steps (normal „N“ and slow „L“)

Possible usage according to directive 2014/34/EU (ATEX)

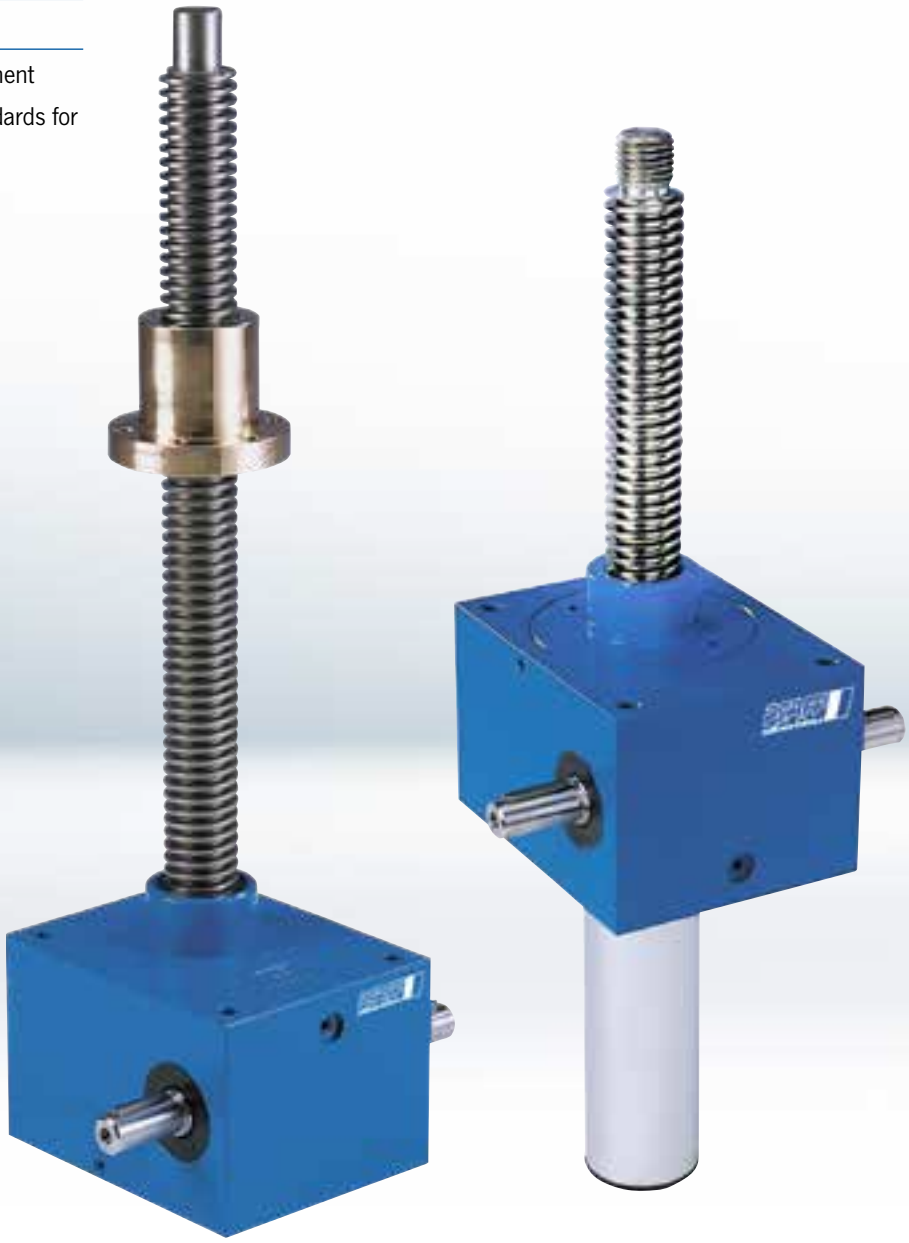

MERKUR range
Selection table

Selection table screw jack MERKUR										
Size		M 0	M 1	M 2	M 3	M 4	M 5	M 6	M 7	M 8[4]
Max. lifting capacity dynamic/static	[kN]	2,5	5	10	25	50	150	250	350	500
Max. tensile load dynamic/static	[kN]	2,5	5	10	25	50	150	250	350	500
Screw Tr[1]		14x4	18x4	20x4	30x6	40x7	60x9	80x10	100x10	120x14
Ratio N		4:1	4:1	4:1	6:1	7:1	9:1	10:1	10:1	14:1
Lift per revolution for ratio N	[mm/per rev.]	1	1	1	1	1	1	1	1	1
Ratio L		16:1	16:1	16:1	24:1	28:1	36:1	40:1	40:1	56:1
Lift per revolution for ratio L	[mm/per rev.]	0,25	0,25	0,25	0,25	0,25	0,25	0,25	0,25	0,25
Max. drive capacity[2] at T = 20 °C Duty cycle (ED) 20 %/h	[kW]	0,12	0,2	0,3	0,5	0,9	2,6	3,7	on request	
Max. drive capacity[2] at T = 20 °C Duty cycle (ED) 10 %/h	[kW]	0,25	0,42	0,6	1,1	1,9	3,7	4,4	on request	
Screw efficiency rating	[%]	49	42,5	40	40	36,5	32,5	29	24	28
Overall efficiency for ratio N	[%]	34	30	28	27	25	19	19	15	15
Overall efficiency for ratio L	[%]	24	23	21	19	18	14	14	11	11
Torque, capacity, turning-speed at 20 % ED/h and 20 °C		see performance tables page 50–51								
Screw torque at max. lifting power	[Nm]	3,2	7,5	16	60	153	437	1390	2312	4100
Max. permitted drive-shaft torque	[Nm]	1,5	3,4	7,1	18	38	93	240	340	570
Mass moment of inertia J[3] Ratio N type 1	[kg cm²]	0,07	0,122	0,16	0,78	1,917	3,412	16,04	49,12	96,27
Mass moment of inertia J[3] Ratio N type 2	[kg cm²]	0,069	0,126	0,165	0,794	1,952	3,741	17,58	52,45	103,39
Mass moment of inertia J[3] Ratio L type 1	[kg cm²]	0,045	0,088	0,115	0,558	1,371	2,628	12,35	37,05	72,62
Mass moment of inertia J[3] Ratio L type 2	[kg cm²]	0,05	0,091	0,119	0,552	1,381	2,647	12,44	37,37	73,15
Max. permitted screw length for compression load	[mm]	see buckling diagrams page 152–153								
Housing material		LM25-TF			EN-GJL-250		EN-GJS-400-15			
Weight without stroke length and protection tube	[kg]	0,6	1,2	2,1	6	17	32	57	85	160
Screw weight per 100 mm stroke	[kg]	0,1	0,35	0,45	0,7	1,2	2	4,2	6,6	10,3
Amount of lubricant in worm gear	[kg]	0,03	0,08	0,14	0,24	0,8	1,1	2	2,7	3,2

Dimension plans type 1: page 52–55, type 2: page 55–58

1) Also applies to Ku screw (see page 157)
2) Max. permitted values for type 1 and Tr screw. Higher values are possible when using type 2 or Ku screw.
3) Referring to 100 mm screw length
4) alternative SHE 50.1

Possible usage according to directive 2014/34/EU (ATEX)

MERKUR range
Performance tables (screw jacks with Tr screw)

A

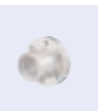

MERKUR range (Cubic standard screw jacks)

Rotary speed, power requirement and permitted lifting speed for ratio N and L with single-start, **lifting (type 1) trapezoidal screw**. All performance data is expressed in terms of dynamic lifting capacity.

With duty ratio of < 10 %/h or configuration with rotating screw (type 2), the maximum permitted drive capacities can be increased. In this case, please consult our screw jack specialists.

Performance table MEKRUR 0 screw Tr 14x4

Speed	Lifting speed		F = 2,5 kN				F = 2 kN				F = 1,5 kN				F = 1 kN				F = 0,75 kN				F = 0,5 kN				F = 0,25 kN			
n	N	L	N		L		N		L		N		L		N		L		N		L		N		L		N		L	
[1/min]	[m/min]		Nm	kW	Nm	kW	Nm	kW	Nm	kW	Nm	kW	Nm	kW	Nm	kW	Nm	kW	Nm	kW	Nm	kW	Nm	kW	Nm	kW	Nm	kW	Nm	kW
1500	1,5	0,375	1,2	0,18	0,4	0,1	0,9	0,15	0,3	0,1	0,7	0,1	0,2	0,1	0,5	0,1	0,2	0,1	0,4	0,1	0,1	0,1	0,2	0,1	0,1	0,1	0,1	0,1	0	0,1
1000	1	0,25	1,2	0,12	0,4	0,1	0,9	0,1	0,3	0,1	0,7	0,1	0,2	0,1	0,5	0,1	0,2	0,1	0,4	0,1	0,1	0,1	0,2	0,1	0,1	0,1	0,1	0,1	0	0,1
750	0,75	0,188	1,2	0,1	0,4	0,1	0,9	0,1	0,3	0,1	0,7	0,1	0,2	0,1	0,5	0,1	0,2	0,1	0,4	0,1	0,1	0,1	0,2	0,1	0,1	0,1	0,1	0,1	0	0,1
600	0,6	0,15	1,2	0,1	0,4	0,1	0,9	0,1	0,3	0,1	0,7	0,1	0,2	0,1	0,5	0,1	0,2	0,1	0,4	0,1	0,1	0,1	0,2	0,1	0,1	0,1	0,1	0,1	0	0,1
500	0,5	0,125	1,2	0,1	0,4	0,1	0,9	0,1	0,3	0,1	0,7	0,1	0,2	0,1	0,5	0,1	0,2	0,1	0,4	0,1	0,1	0,1	0,2	0,1	0,1	0,1	0,1	0,1	0	0,1
300	0,3	0,075	1,2	0,1	0,4	0,1	0,9	0,1	0,3	0,1	0,7	0,1	0,2	0,1	0,5	0,1	0,2	0,1	0,4	0,1	0,1	0,1	0,2	0,1	0,1	0,1	0,1	0,1	0	0,1
100	0,1	0,025	1,2	0,1	0,4	0,1	0,9	0,1	0,3	0,1	0,7	0,1	0,2	0,1	0,5	0,1	0,2	0,1	0,4	0,1	0,1	0,1	0,2	0,1	0,1	0,1	0,1	0,1	0	0,1
50	0,05	0,013	1,2	0,1	0,4	0,1	0,9	0,1	0,3	0,1	0,7	0,1	0,2	0,1	0,5	0,1	0,2	0,1	0,4	0,1	0,1	0,1	0,2	0,1	0,1	0,1	0,1	0,1	0	0,1

Performance table MEKRUR 1 screw Tr 18x4

Speed	Lifting speed		F = 5 kN				F = 4 kN				F = 3 kN				F = 2,5 kN				F = 2 kN				F = 1,5 kN				F = 1 kN			
n	N	L	N		L		N		L		N		L		N		L		N		L		N		L		N		L	
[1/min]	[m/min]		Nm	kW	Nm	kW	Nm	kW	Nm	kW	Nm	kW	Nm	kW	Nm	kW	Nm	kW	Nm	kW	Nm	kW	Nm	kW	Nm	kW	Nm	kW	Nm	kW
1500	1,5	0,375	2,7	0,42	0,9	0,1	2,1	0,33	0,7	0,1	1,6	0,25	0,5	0,1	1,3	0,21	0,4	0,1	1,1	0,2	0,3	0,1	0,8	0,1	0,3	0,1	0,5	0,1	0,2	0,1
1000	1	0,25	2,7	0,28	0,9	0,1	2,1	0,22	0,7	0,1	1,6	0,17	0,5	0,1	1,3	0,14	0,4	0,1	1,1	0,1	0,3	0,1	0,8	0,1	0,3	0,1	0,5	0,1	0,2	0,1
750	0,75	0,188	2,7	0,21	0,9	0,1	2,1	0,17	0,7	0,1	1,6	0,13	0,5	0,1	1,3	0,1	0,4	0,1	1,1	0,1	0,3	0,1	0,8	0,1	0,3	0,1	0,5	0,1	0,2	0,1
600	0,6	0,15	2,7	0,17	0,9	0,1	2,1	0,13	0,7	0,1	1,6	0,1	0,5	0,1	1,3	0,1	0,4	0,1	1,1	0,1	0,3	0,1	0,8	0,1	0,3	0,1	0,5	0,1	0,2	0,1
500	0,5	0,125	2,7	0,14	0,9	0,1	2,1	0,1	0,7	0,1	1,6	0,1	0,5	0,1	1,3	0,1	0,4	0,1	1,1	0,1	0,3	0,1	0,8	0,1	0,3	0,1	0,5	0,1	0,2	0,1
300	0,3	0,075	2,7	0,1	0,9	0,1	2,1	0,1	0,7	0,1	1,6	0,1	0,5	0,1	1,3	0,1	0,4	0,1	1,1	0,1	0,3	0,1	0,8	0,1	0,3	0,1	0,5	0,1	0,2	0,1
100	0,1	0,025	2,7	0,1	0,9	0,1	2,1	0,1	0,7	0,1	1,6	0,1	0,5	0,1	1,3	0,1	0,4	0,1	1,1	0,1	0,3	0,1	0,8	0,1	0,3	0,1	0,5	0,1	0,2	0,1
50	0,05	0,013	2,7	0,1	0,9	0,1	2,1	0,1	0,7	0,1	1,6	0,1	0,5	0,1	1,3	0,1	0,4	0,1	1,1	0,1	0,3	0,1	0,8	0,1	0,3	0,1	0,5	0,1	0,2	0,1

B

Performance table MEKRUR 2 screw Tr 20x4

Speed	Lifting speed		F = 10 kN				F = 8 kN				F = 6 kN				F = 4 kN				F = 3 kN				F = 2 kN				F = 1 kN			
n	N	L	N		L		N		L		N		L		N		L		N		L		N		L		N		L	
[1/min]	[m/min]		Nm	kW	Nm	kW	Nm	kW	Nm	kW	Nm	kW	Nm	kW	Nm	kW	Nm	kW	Nm	kW	Nm	kW	Nm	kW	Nm	kW	Nm	kW	Nm	kW
1500	1,5	0,375	5,7	0,89	1,9	0,3	4,5	0,71	1,5	0,24	3,4	0,54	1,1	0,18	2,3	0,36	0,8	0,1	1,7	0,27	0,6	0,1	1,1	0,2	0,4	0,1	0,6	0,1	0,2	0,1
1000	1	0,25	5,7	0,6	1,9	0,2	4,5	0,48	1,5	0,16	3,4	0,36	1,1	0,12	2,3	0,24	0,8	0,1	1,7	0,18	0,6	0,1	1,1	0,1	0,4	0,1	0,6	0,1	0,2	0,1
750	0,75	0,188	5,7	0,45	1,9	0,15	4,5	0,36	1,5	0,12	3,4	0,27	1,1	0,1	2,3	0,18	0,8	0,1	1,7	0,13	0,6	0,1	1,1	0,1	0,4	0,1	0,6	0,1	0,2	0,1
600	0,6	0,15	5,7	0,36	1,9	0,12	4,5	0,29	1,5	0,1	3,4	0,21	1,1	0,1	2,3	0,14	0,8	0,1	1,7	0,1	0,6	0,1	1,1	0,1	0,4	0,1	0,6	0,1	0,2	0,1
500	0,5	0,125	5,7	0,3	1,9	0,1	4,5	0,24	1,5	0,1	3,4	0,18	1,1	0,1	2,3	0,12	0,8	0,1	1,7	0,1	0,6	0,1	1,1	0,1	0,4	0,1	0,6	0,1	0,2	0,1
300	0,3	0,075	5,7	0,18	1,9	0,1	4,5	0,14	1,5	0,1	3,4	0,11	1,1	0,1	2,3	0,1	0,8	0,1	1,7	0,1	0,6	0,1	1,1	0,1	0,4	0,1	0,6	0,1	0,2	0,1
100	0,1	0,025	5,7	0,1	1,9	0,1	4,5	0,1	1,5	0,1	3,4	0,1	1,1	0,1	2,3	0,1	0,8	0,1	1,7	0,1	0,6	0,1	1,1	0,1	0,4	0,1	0,6	0,1	0,2	0,1
50	0,05	0,013	5,7	0,1	1,9	0,1	4,5	0,1	1,5	0,1	3,4	0,1	1,1	0,1	2,3	0,1	0,8	0,1	1,7	0,1	0,6	0,1	1,1	0,1	0,4	0,1	0,6	0,1	0,2	0,1

C

D

Max. duty ratio at 20 °C ambient temperature: 20 %/h 10 %/h static only (dynamic not permitted)

MERKUR range
Performance tables (screw jacks with Tr screw)

Performance table MEKRUR 3 screw Tr 30x6

Speed	Lifting speed		F = 25 kN				F = 20 kN				F = 15 kN				F = 10 kN				F = 5 kN				F = 2,5 kN				F = 1 kN			
n	N	L	N		L		N		L		N		L		N		L		N		L		N		L		N		L	
[1/min]	[m/min]		Nm	kW	Nm	kW	Nm	kW	Nm	kW	Nm	kW	Nm	kW	Nm	kW	Nm	kW	Nm	kW	Nm	kW	Nm	kW	Nm	kW	Nm	kW	Nm	kW
1500	1,5	0,375	14,7	2,31	5,2	0,82	11,8	1,85	4,2	0,66	8,8	1,39	3,1	0,49	5,9	0,93	2,1	0,33	2,9	0,46	1	0,2	1,5	0,2	0,5	0,1	0,6	0,1	0,2	0,1
1000	1	0,25	14,7	1,54	5,2	0,55	11,8	1,23	4,2	0,44	8,8	0,93	3,1	0,33	5,9	0,62	2,1	0,22	2,9	0,31	1	0,1	1,5	0,2	0,5	0,1	0,6	0,1	0,2	0,1
750	0,75	0,188	14,7	1,16	5,2	0,41	11,8	0,93	4,2	0,33	8,8	0,69	3,1	0,25	5,9	0,46	2,1	0,16	2,9	0,23	1	0,1	1,5	0,1	0,5	0,1	0,6	0,1	0,2	0,1
600	0,6	0,15	14,7	0,93	5,2	0,33	11,8	0,74	4,2	0,26	8,8	0,56	3,1	0,2	5,9	0,37	2,1	0,13	2,9	0,19	1	0,1	1,5	0,1	0,5	0,1	0,6	0,1	0,2	0,1
500	0,5	0,125	14,7	0,77	5,2	0,27	11,8	0,62	4,2	0,22	8,8	0,46	3,1	0,16	5,9	0,31	2,1	0,11	2,9	0,15	1	0,1	1,5	0,1	0,5	0,1	0,6	0,1	0,2	0,1
300	0,3	0,075	14,7	0,46	5,2	0,16	11,8	0,37	4,2	0,13	8,8	0,28	3,1	0,1	5,9	0,19	2,1	0,1	2,9	0,1	1	0,1	1,5	0,1	0,5	0,1	0,6	0,1	0,2	0,1
100	0,1	0,025	14,7	0,15	5,2	0,1	11,8	0,12	4,2	0,1	8,8	0,1	3,1	0,1	5,9	0,1	2,1	0,1	2,9	0,1	1	0,1	1,5	0,1	0,5	0,1	0,6	0,1	0,2	0,1
50	0,05	0,013	14,7	0,1	5,2	0,1	11,8	0,1	4,2	0,1	8,8	0,1	3,1	0,1	5,9	0,1	2,1	0,1	2,9	0,1	1	0,1	1,5	0,1	0,5	0,1	0,6	0,1	0,2	0,1

Performance table MEKRUR 4 screw Tr 40x7

Speed	Lifting speed		F = 50 kN				F = 40 kN				F = 30 kN				F = 20 kN				F = 10 kN				F = 5 kN				F = 2,5 kN			
n	N	L	N		L		N		L		N		L		N		L		N		L		N		L		N		L	
[1/min]	[m/min]		Nm	kW	Nm	kW	Nm	kW	Nm	kW	Nm	kW	Nm	kW	Nm	kW	Nm	kW	Nm	kW	Nm	kW	Nm	kW	Nm	kW	Nm	kW	Nm	kW
1500	1,5	0,375	31,8	5	11,1	1,7	25,5	4	8,8	1,4	19,1	3	6,6	1	12,7	2	4,4	0,7	6,4	1	2,2	0,3	3,2	0,5	1,1	0,2	1,6	0,3	0,6	0,1
1000	1	0,25	31,8	3,3	11,1	1,2	25,5	2,7	8,8	0,9	19,1	2	6,6	0,7	12,7	1,3	4,4	0,5	6,4	0,7	2,2	0,2	3,2	0,3	1,1	0,1	1,6	0,2	0,6	0,1
750	0,75	0,188	31,8	2,5	11,1	0,9	25,5	2	8,8	0,7	19,1	1,5	6,6	0,5	12,7	1	4,4	0,35	6,4	0,5	2,2	0,2	3,2	0,3	1,1	0,1	1,6	0,1	0,6	0,1
600	0,6	0,15	31,8	2	11,1	0,7	25,5	1,6	8,8	0,6	19,1	1,2	6,6	0,4	12,7	0,8	4,4	0,3	6,4	0,4	2,2	0,1	3,2	0,2	1,1	0,1	1,6	0,1	0,6	0,1
500	0,5	0,125	31,8	1,7	11,1	0,6	25,5	1,3	8,8	0,5	19,1	1	6,6	0,3	12,7	0,7	4,4	0,2	6,4	0,3	2,2	0,1	3,2	0,2	1,1	0,1	1,6	0,1	0,6	0,1
300	0,3	0,075	31,8	1	11,1	0,3	25,5	0,8	8,8	0,3	19,1	0,6	6,6	0,2	12,7	0,4	4,4	0,1	6,4	0,2	2,2	0,1	3,2	0,1	1,1	0,1	1,6	0,1	0,6	0,1
100	0,1	0,025	31,8	0,3	11,1	0,1	25,5	0,3	8,8	0,1	19,1	0,2	6,6	0,1	12,7	0,1	4,4	0,1	6,4	0,1	2,2	0,1	3,2	0,1	1,1	0,1	1,6	0,1	0,6	0,1
50	0,05	0,013	31,8	0,2	11,1	0,1	25,5	0,1	8,8	0,1	19,1	0,1	6,6	0,1	12,7	0,1	4,4	0,1	6,4	0,1	2,2	0,1	3,2	0,1	1,1	0,1	1,6	0,1	0,6	0,1

Performance table MEKRUR 5 screw Tr 60x9

Speed	Lifting speed		F = 150 kN				F = 100 kN				F = 80 kN				F = 60 kN				F = 40 kN				F = 20 kN				F = 10 kN			
n	N	L	N		L		N		L		N		L		N		L		N		L		N		L		N		L	
[1/min]	[m/min]		Nm	kW	Nm	kW	Nm	kW	Nm	kW	Nm	kW	Nm	kW	Nm	kW	Nm	kW	Nm	kW	Nm	kW	Nm	kW	Nm	kW	Nm	kW	Nm	kW
1500	1,5	0,375	125,7	19,7	42,6	6,7	83,8	13,2	28,4	4,5	67	10,5	22,7	3,6	50,3	7,9	17,1	2,7	33,5	5,3	11,4	1,8	16,8	2,6	5,7	0,9	8,4	1,3	2,8	0,4
1000	1	0,25	125,7	13,2	42,6	4,5	83,8	8,8	28,4	3	67	7	22,7	2,4	50,3	5,3	17,1	1,8	33,5	3,5	11,4	1,2	16,8	1,8	5,7	0,6	8,4	0,9	2,8	0,3
750	0,75	0,188	125,7	9,9	42,6	3,3	83,8	6,6	28,4	2,2	67	5,3	22,7	1,8	50,3	3,9	17,1	1,3	33,5	2,6	11,4	0,9	16,8	1,3	5,7	0,4	8,4	0,7	2,8	0,2
600	0,6	0,15	125,7	7,9	42,6	2,7	83,8	5,3	28,4	1,8	67	4,2	22,7	1,4	50,3	3,2	17,1	1,1	33,5	2,1	11,4	0,7	16,8	1,1	5,7	0,4	8,4	0,5	2,8	0,2
500	0,5	0,125	125,7	6,6	42,6	2,2	83,8	4,4	28,4	1,5	67	3,5	22,7	1,2	50,3	2,6	17,1	0,9	33,5	1,8	11,4	0,6	16,8	0,9	5,7	0,3	8,4	0,4	2,8	0,1
300	0,3	0,075	125,7	3,9	42,6	1,3	83,8	2,6	28,4	0,9	67	2,1	22,7	0,7	50,3	1,6	17,1	0,5	33,5	1,1	11,4	0,4	16,8	0,5	5,7	0,2	8,4	0,3	2,8	0,1
100	0,1	0,025	125,7	1,3	42,6	0,4	83,8	0,9	28,4	0,3	67	0,7	22,7	0,2	50,3	0,5	17,1	0,2	33,5	0,4	11,4	0,1	16,8	0,2	5,7	0,1	8,4	0,1	2,8	0,1
50	0,05	0,013	125,7	0,7	42,6	0,2	83,8	0,4	28,4	0,1	67	0,4	22,7	0,1	50,3	0,3	17,1	0,1	33,5	0,2	11,4	0,1	16,8	0,1	5,7	0,1	8,4	0,1	2,8	0,1

Performance table MEKRUR 6 screw Tr 80x10

Speed	Lifting speed		F = 250 kN				F = 200 kN				F = 150 kN				F = 100 kN				F = 80 kN				F = 60 kN				F = 40 kN			
n	N	L	N		L		N		L		N		L		N		L		N		L		N		L		N		L	
[1/min]	[m/min]		Nm	kW	Nm	kW	Nm	kW	Nm	kW	Nm	kW	Nm	kW	Nm	kW	Nm	kW	Nm	kW	Nm	kW	Nm	kW	Nm	kW	Nm	kW	Nm	kW
1500	1,5	0,375	209,4	32,9	71,1	11,2	167,5	26,3	56,8	8,9	125,7	19,7	42,6	6,7	83,8	13,2	28,4	4,5	67	10,5	22,7	3,6	50,3	7,9	17,1	2,7	33,5	5,3	11,4	1,8
1000	1	0,25	209,4	21,9	71,1	7,4	167,5	17,5	56,8	6	125,7	13,2	42,6	4,5	83,8	8,8	28,4	3	67	7	22,7	2,4	50,3	5,3	17,1	1,8	33,5	3,5	11,4	1,2
750	0,75	0,188	209,4	16,4	71,1	5,6	167,5	13,2	56,8	4,5	125,7	9,9	42,6	3,3	83,8	6,6	28,4	2,2	67	5,3	22,7	1,8	50,3	3,9	17,1	1,3	33,5	2,6	11,4	0,9
600	0,6	0,15	209,4	13,2	71,1	4,5	167,5	10,5	56,8	3,6	125,7	7,9	42,6	2,7	83,8	5,3	28,4	1,8	67	4,2	22,7	1,4	50,3	3,2	17,1	1,1	33,5	2,1	11,4	0,7
500	0,5	0,125	209,4	11	71,1	3,7	167,5	8,8	56,8	3	125,7	6,6	42,6	2,2	83,8	4,4	28,4	1,5	67	3,5	22,7	1,2	50,3	2,6	17,1	0,9	33,5	1,8	11,4	0,6
300	0,3	0,075	209,4	6,6	71,1	2,2	167,5	5,3	56,8	1,8	125,7	3,9	42,6	1,3	83,8	2,6	28,4	0,9	67	2,1	22,7	0,7	50,3	1,6	17,1	0,5	33,5	1,1	11,4	0,4
100	0,1	0,025	209,4	2,2	71,1	0,7	167,5	1,8	56,8	0,6	125,7	1,3	42,6	0,4	83,8	0,9	28,4	0,3	67	0,7	22,7	0,2	50,3	0,5	17,1	0,2	33,5	0,4	11,4	0,1
50	0,05	0,013	209,4	1,1	71,1	0,4	167,5	0,9	56,8	0,3	125,7	0,7	42,6	0,2	83,8	0,4	28,4	0,1	67	0,4	22,7	0,1	50,3	0,3	17,1	0,1	33,5	0,2	11,4	0,1

MERKUR range
Technical drawings: Type 1

A

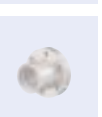
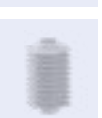

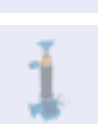

B

C

D

Technical drawings MERKUR: Type 1, Standard

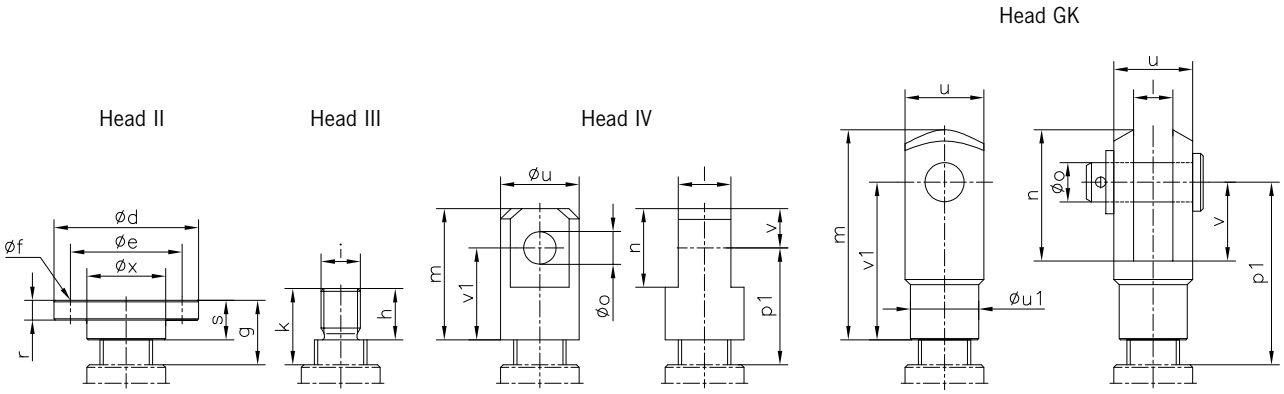

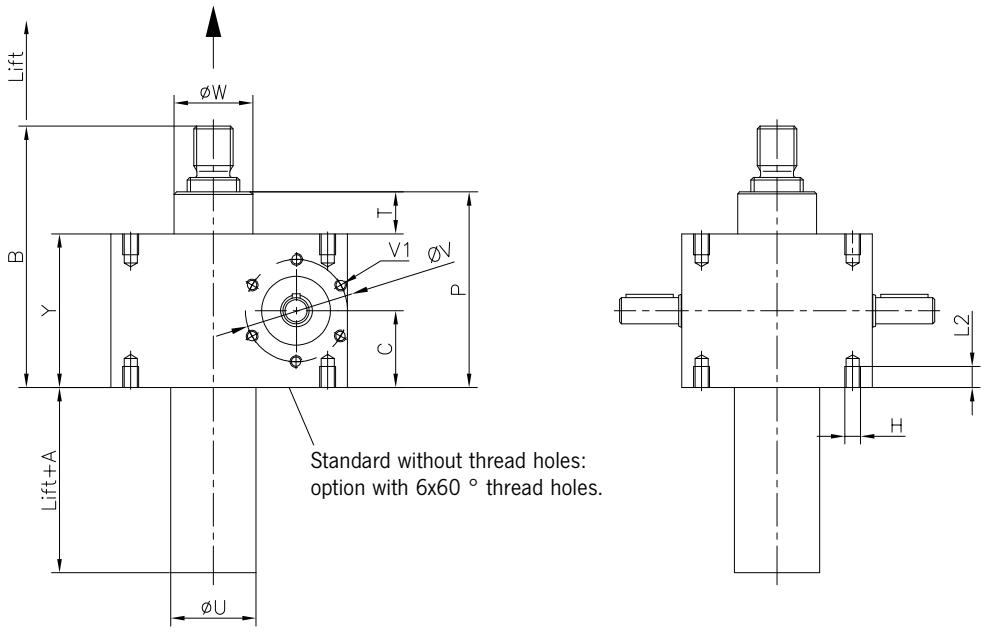

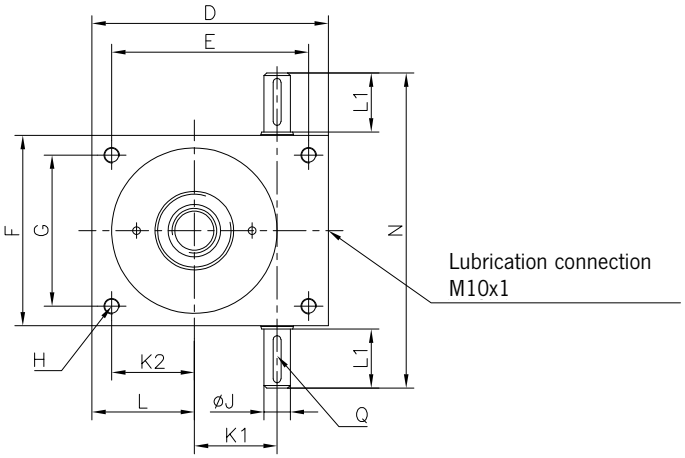

CAD & go

MERKUR range
Dimensions: Type 1

Dimensions MERKUR: Type 1, Standard									
Size	M 0	M 1	M 2	M 3	M 4	M 5	M 6	M 7	M 8
Screw*	Tr 14x4	Tr 18x4	Tr 20x4	Tr 30x6	Tr 40x7	Tr 60x9	Tr 80x10	Tr 100x10	Tr 120x14
	-	Ku 16x05 Ku 16x10 Ku 16x20	Ku 20x05	Ku 25x05 Ku 25x10 Ku 25x25	Ku 40x05 Ku 40x10 Ku 40x20	Ku 50x10	-	-	-
A/A **	25/55	25/55	35/65	40/75	45/100	55/90	60/110	65/155	100/145
B	77	97	120	132	182	255	275	360	466
C	25	31	37,5	41	58,5	80	82,5	110	133
D	60	80	100	130	180	200	240	290	360
E	48	60	78	106	150	166	190	230	290
F	50	72	85	105	145	165	220	250	300
G	38	52	63	81	115	131	170	190	230
H	M6	M8	M8	M10	M12	M20	M30	M36	M42
Ø J k6	9	10	14	16	20	25	30	35	48
K1	20	25	32	45	63	71	80	100	135
K2	16	21	29	42	63	66	75	95	115
L	22	31	40	54	78	83	100	125	150
L1	20	22,5	25,5	43	45	65	65	63	97,5
L2	12	13	15	15	16	30	45	54	80
N	92	120	140	195	240	300	355	380	500
P	62	74	93	105	149	200	205	270	326
Q	3x3x14	3x3x18	5x5x20	5x5x36	6x6x36	8x7x56	8x7x56	10x8x56	14x9x90
T	12	12	18	23	32	40	40	50	60
Ø U	28	32	40	50	65	90	125	150	180
Ø V	24x24	Ø48	Ø56	Ø56	Ø78	Ø78	Ø110	Ø115	Ø120
V1	M5	M4	M5	M5	M6	M6	M10	on request	on request
Ø W	26	30	38,7	46	60	85	120	145	170
Y	50	62	75	82	117	160	165	220	266
Head II									
Ø d	50	65	80	90	110	150	220	260	310
Ø e	40	48	60	67	85	117	170	205	240
Ø f	4xØ7	4xØ9	4xØ11	4xØ11	4xØ13	4xØ17	4xØ25	4xØ32	4xØ38
g	19	24	28	28	34	57	72	92	142
s	16	20	21	23	30	50	60	80	120
r	6	7	8	10	15	20	30	40	40
Ø x	26	30	40	46	60	85	120	145	170
Head III									
h	12	19	20	22	29	48	58	78	118
i	M8	M12	M14	M20	M30	M36	M64x3	M72x3	M100x3
k	15	23	27	27	33	55	70	90	140
Head IV									
l h10	12	15	20	30	35	40	80	110	120
m	40	55	63	78	105	147	175	220	330
n	20	30	36	45	65	83	130	170	230
Ø o H8	10	14	16	24	32	40	60	80	90
p1	33	44	52	58	74	104	117	147	222
Ø u	25	30	40	45	60	85	120	160	170
v	10	15	18	25	35	50	70	85	130
v1	30	40	45	53	70	97	105	135	200
Head GK									
l H13	8	12	14	20	30	36	-	-	-
m	42	62	72	105	160	188	-	-	-
n	26	37	44	65	100	116	-	-	-
Ø o H9	8	12	16	20	30	35	-	-	-
p1	35	52	63	85	124	151	-	-	-
u	16	24	27	40	60	70	-	-	-
Ø u1	14	20	24	34	52	60	-	-	-
v	16	24	28	40	60	72	-	-	-
v1	32	48	56	80	120	144	-	-	-

* Dimensions for Ku spindle on request
** Screw with anti-rotation device or screw for KGT design

MERKUR range
Technical drawings and dimensions

A

Guide ring Sf

The Sf guide ring is standard on all sizes of the MERKUR series.

With added-on limit switches Sm/Si

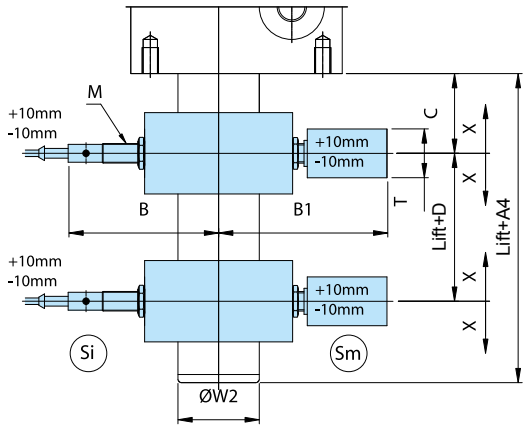

Size	A4	B	B1	C Sm/Si	D Sm/Si	T	M	Ø W2	X
M 0	105	84	95	44/38	12/24	50	M12x1	28	±10
M 1	105	86	97	44/38	12/24	50	M12x1	32	±10
M 2	110	90	100	44/38	16/28	50	M12x1	40	±10
M 3	115	94	104	49/43	16/28	50	M12x1	50	±10
M 4	135	101	111	58/52	20/32	50	M12x1	65	±10
M 5	140	114	123	66/60	20/32	50	M12x1	90	±10
M 6	135	on request		66/60	25/37	50	M12x1	125	±10
M 7	170			76/70	30/42	50	M12x1	150	±10
M 8	160			86/80	30/42	50	M12x1	180	±10

All sizes are prepared for mechanical (Sm) and inductive (Si) operating limit switches. Limit switches are not included in the scope of delivery.

Ind. proximity switch Si	Mechanical limit switch Sm
IF-0006	XCM D 21F2L1

Anti-Turn device V

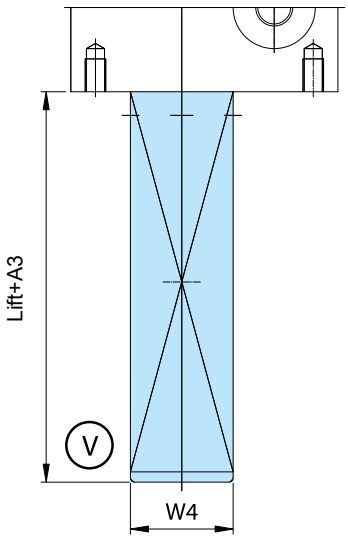

Size	A3	W4
M 1	60	35x35
M 2	70	40x40
M 3	80	50x50
M 4	100	70x70
M 5	115	90x90
M 6	120	125x125
M 7	125	150x150
M 8	155	180x180

In order to ensure a linear movement, the screw must be secured against rotation. This can be done on site or by means of an anti-rotation device on the MERKUR by means of a square tube.

B

C

D

MERKUR range
Technical drawings and dimensions

Anti-turn device Vm/Vi with added-on limit switches

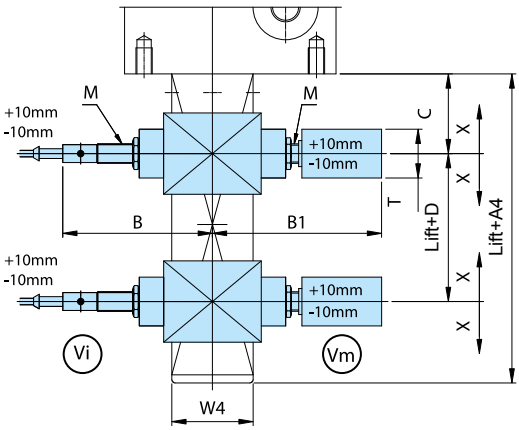

Size	A4	B	B1	C Vm/Vi	D Vm/Vi	T	M	W4	X
M 1	105	86	96	44/38	12/24	50	M12x1	35x35	±10
M 2	110	88	100	44/38	16/28	50	M12x1	40x40	±10
M 3	115	93	105	49/43	16/28	50	M12x1	50x50	±10
M 4	135	101	110	58/52	20/32	50	M12x1	70x70	±10
M 5	145	113	125	66/60	20/32	50	M12x1	90x90	±10
M 6	135	on request		66/60	25/37	50	M12x1	125x125	±10
M 7	170			76/70	30/42	50	M12x1	150x150	±10
M 8	160			86/80	30/42	50	M12x1	180x180	±10

All sizes are prepared for mechanical (Vm) and inductive (Vi) operating limit switches. Limit switches are not included in the scope of delivery.

Ind. proximity switch Vi	Mechanical limit switch Vm
IF-0006	XCM D 21F2L1

Mounting brackets

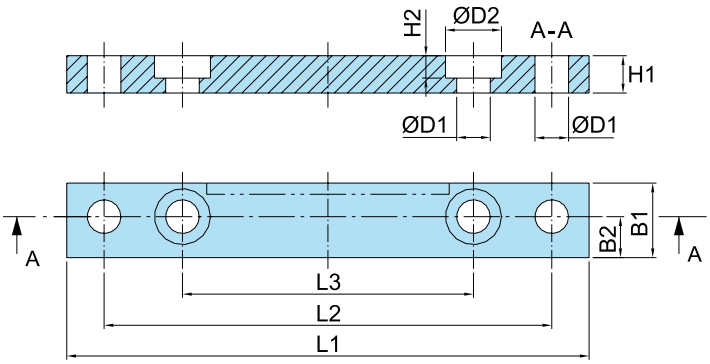

Size	L1	L2	L3	B1	B2	H1	H2	ØD1	ØD2
M 0	90	75	48	12	6	10	5	6,6	11
M 1	120	100	60	20	10	10	5	9	15
M 2	140	120	78	20	11	10	6	9	15
M 3	170	150	106	25	12	12	7	11	18
M 4	230	204	150	30	15	16	8	13,5	20
M 5	270	236	166	40	17	25	14	22	33
M 6	on request								
M 7									
M 8									

MERKUR range
Technical drawings: Type 2

A

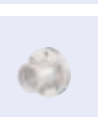
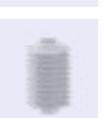

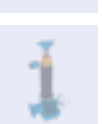

B

C

D

Technical drawings MERKUR: Type 2, Standard

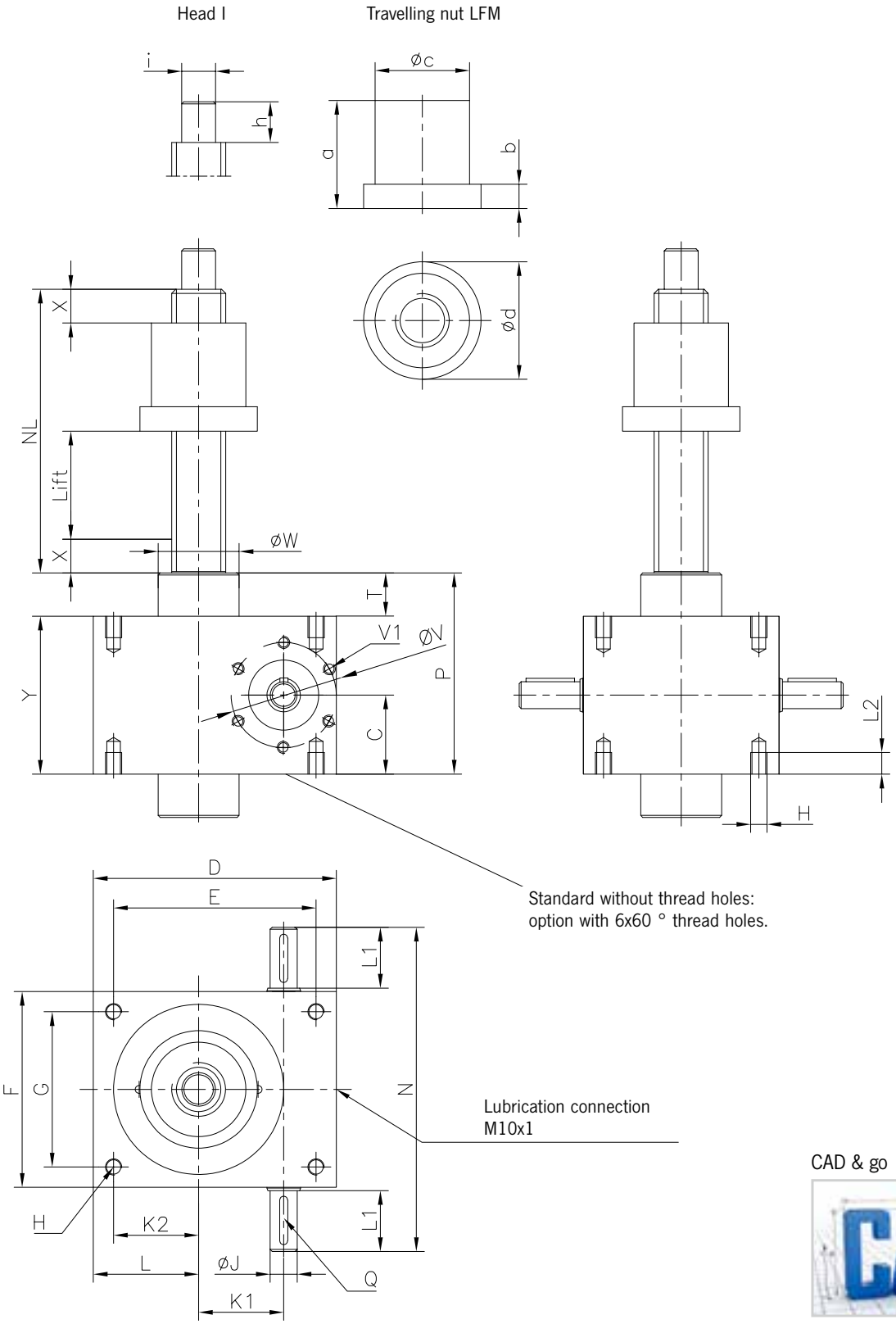

CAD & go

MERKUR range
Dimensions: Type 2

Dimensions MERKUR: Type 2, Standard									
Size	M 0	M 1	M 2	M 3	M 4	M 5	M 6	M 7	M 8
Screw	Tr 14x4	Tr 18x4	Tr 20x4	Tr 30x6	Tr 40x7	Tr 60x9	Tr 80x10	Tr 100x10	Tr 120x14
C	25	31	37,5	41	58,5	80	82,5	110	133
D	60	80	100	130	180	200	240	290	360
E	48	60	78	106	150	166	190	230	290
F	50	72	85	105	145	165	220	250	300
G	38	52	63	81	115	131	170	190	230
H	M 6	M 8	M 8	M 10	M 12	M 20	M 30	M 36	M 42
Ø J k6	9	10	14	16	20	25	30	35	48
K1	20	25	32	45	63	71	80	100	135
K2	16	21	29	42	63	66	75	95	115
L	22	31	40	54	78	83	100	125	150
L1	20	22,5	25,5	43	45	65	65	63	97,5
L2	12	13	15	15	16	30	40	54	80
N	92	120	140	195	240	300	355	380	500
NL	Lift + 52	Lift + 56	Lift + 70	Lift + 85	Lift + 110	Lift + 125	Lift + 170	Lift + 195	Lift + 215
P	62	74	93	105	149	200	205	270	326
Q	3x3x14	3x3x18	5x5x20	5x5x36	6x6x36	8x7x56	8x7x56	10x8x56	14x9x90
T	12	12	18	23	32	40	40	50	60
T1*	12	12	18	23	32	40	40	50	60
Ø V	24x24	Ø48	Ø56	Ø56	Ø78	Ø78	Ø110	Ø115	Ø120
V1	M5	M4	M5	M5	M6	M6	M10	on request	on request
Ø W	26	30	36,1	46	60	85	120	145	170
Ø W1*	26	30	38,7	46	60	85	120	145	170
Safety X	10	12	15	20	25	25	25	25	30
Y	50	62	75	82	117	160	165	220	266
Travelling nut LFM									
a	32	32	40	45	60	75	120	145	155
b	10	10	12	15	18	25	35	35	50
Ø c h9	40	40	45	50	70	90	130	150	160
Ø d	50	50	65	80	87	110	155	190	225
Head I									
h	12	15	20	25	30	45	75	100	120
Ø i j6	8	12	15	20	25	40	60	80	95

* Bearing neck can be omitted for MERKUR 0 to MERKUR 5 on request.
For other nut designs, see page 94–97

MERKUR range
Technical drawings and dimensions

With short safety nut LFM-K

The short safety nut significantly increases the operational safety of the drive elements by absorbing the axial load in the event of a main nut fracture. At the same time, the safety nut can be used to check the wear of the main nut exactly, since the distance between the two nuts changes with increasing wear. In the case of worm gear screw jacks with safety nuts the main load direction (tensile or compression load) and the installation position must always be taken into account, as only a consistently arranged safety nut can take up the load.

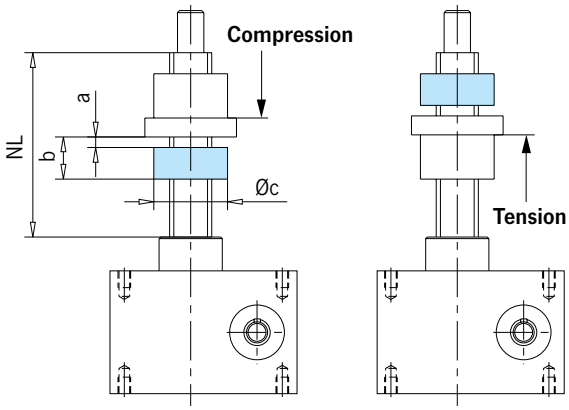

MERKUR type 2, compression and tensile load

Size	NL	a*	b	Øc
M 0	on request			
M 1				
M 2	Lift + 95	5	25	45
M 3	Lift + 120	5	35	50
M 4	Lift + 150	5	40	70
M 5	Lift + 185	5	60	90
M 6	Lift + 250	5	65	130
M 7	on request			
M 8				

*Corresponds to new condition

With long safety nut LFM-E (DGUV V17/18 and DGUV R100-500, chap. 2.10)

When using worm gear screw jacks in theater stages (DGUV V17/18), lifting platforms (DGUV R100-500, chap. 2.10) or lifting systems where there is a risk of injury to persons, the screw jacks are designed in accordance with the current regulations.

Additional components ensure, among other things, fall protection (self-locking spindles and/or mechanical safety brakes in the drive) and, if required, the synchronous direction of rotation.

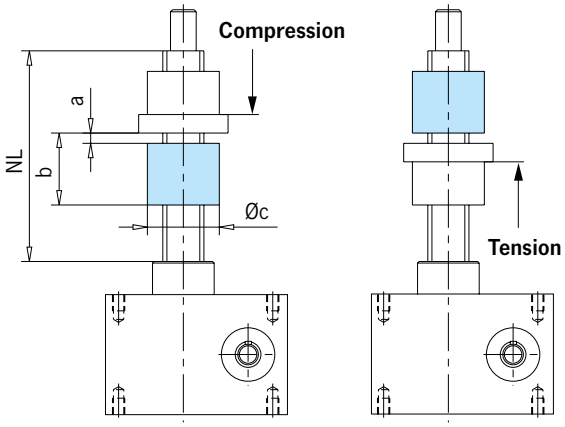

Illustration without limit switch

MERKUR type 2, compression and tensile load

Size	NL	a*	b	Øc
M 0	on request			
M 1				
M 2	Lift + 115	5	45	45
M 3	Lift + 140	5	55	50
M 4	Lift + 180	5	70	70
M 5	Lift + 210	5	85	90
M 6	on request			
M 7				
M 8				

*Corresponds to new condition

All sizes are prepared for mechanical operating limit switches.
Limit switches are not included in the scope of delivery.

Mechanical limit switch

Technical data and dimensions see chapter „Accessories“!

For further travelling nut designs, see page 94–97

Screw jacks
Application

Reference example

The „floating“ stage in Lake Idroscalo in Milan has numerous technical refinements – such as a stage roof that can be raised or lowered as required. The construction of Columbus McKinnon not only meets the high safety requirements according to DGUV V17/18 (BGV C1), which apply to the protection of the actors in particular stage technology, but also masters the extreme environmental conditions: The roof lift construction, which can be lifted and lowered with Pfaff-silberblau drive technology, resists precipitation and the humidity of the lake, defies high heat and minus temperatures and ensures absolute safety and smooth functioning even in strong gusts of wind.

The drive system consists of four optimized screw jacks of the SHE series with reinforced saw thread spindles and long, electrically monitored safety nuts. Two of these special SHEs were mechanically coupled and installed on the double shears to the left and right of the stage. Due to the limited space in the scissor construction, the spindle lifting elements were reinforced for a maximum load of 150 tons each. The two drive trains thus have a total lifting force of 6,000 kN distributed over four lifting elements.

This ensures that the screw jacks with a total drive power of around 2 x 18.5 kW can move a load of 500 t at a lifting speed of around 90 mm/min. The long, electrically monitored safety nuts ensure the highest possible safety: In the event of a nut break, a mechanical, forced-opening limit switch switches off the system. The electrical synchronization of the drives takes place via a pulse cam in the safety nut, which transmits an exactly predetermined number of pulses over the entire stroke path via an inductive limit switch to the controller. This PLC control, which was also supplied by Pfaff-silberblau, ensures a corresponding evaluation. Infrared temperature sensors in the lifting elements automatically switch off the system in the event of overload or overheating. An additional plus in safety is provided by a balancing beam, which ensures an even load distribution of the individual pairs of screw jacks.

Optimized worm gear screw jacks from Pfaff-silberblau reliably and, above all, safely raise and lower the roof of Milan‘s lake stage.
Image source: Pfaff-silberblau

MERKUR range
Mounting positions, shaft/attachment side

A

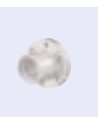

B

C

D

MERKUR range: Design A

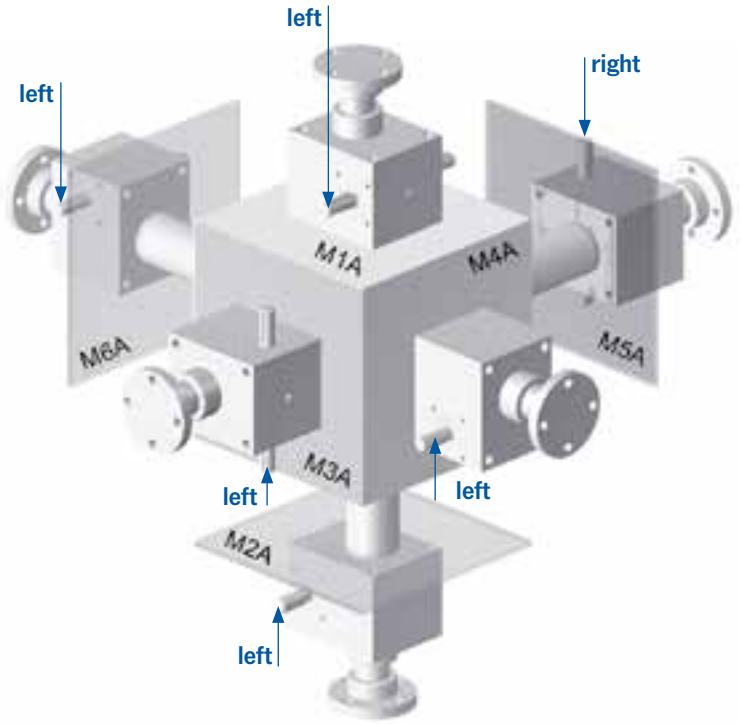

MERKUR range: Design B

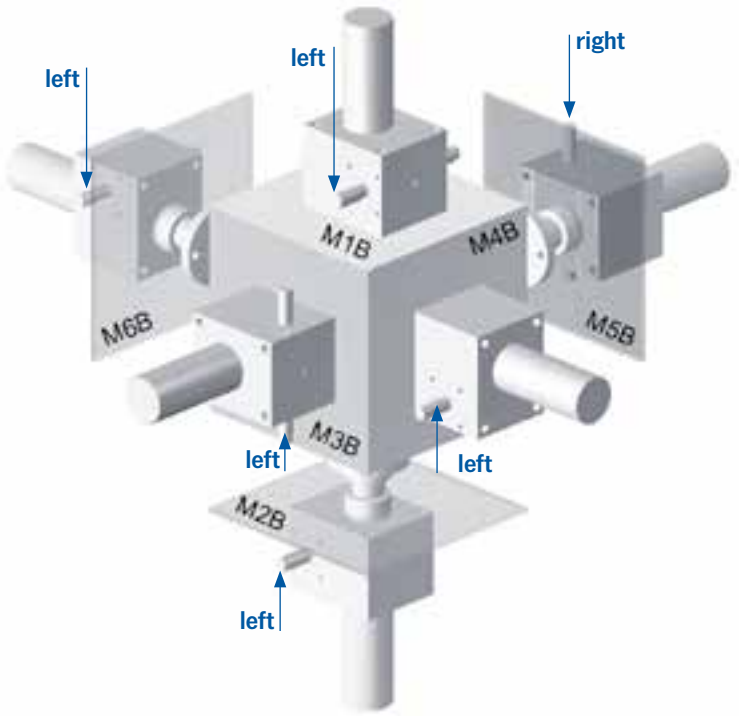

MERKUR range
Ordering details

M	E	R	K	U	R	-	☐	☐	-	☐	-	☐	☐	☐	☐	☐	x	☐	☐	-	☐	-	☐	☐	☐	-	☐	-	☐	☐	-	☐	-	☐	☐	☐	-	☐	☐	☐	☐	-	☐	☐	☐	☐	-	...
							1			2		3						4			5		6			7		8			9		10				11					12					13

No.	Description	
1	**Range**	**MERKUR**
2	**Size**	**M0 / M1 / M2 / M3 / M4 / M5 / M6 / M7 / M8**
3	**Configuration type**	**1** **2**
4	**Screw**	**Tr** (DxP) = Trapezoidal screw **Ku** (DxP) = Ball screw
5	**Ratio**	**N** **L**
6	**Mounting position**	**M1A / M1B / M2A / M2B / M3A / M3B** **M4A / M4B / M5A / M5B / M6A / M6B**
7	**Screw side variant**	**F** (Type 1) **0** (Type 2)
8	**Protective tube side variant**	**F / Se / Sf / Si / Sm / V / Vi / Vm** (Type 1) **0** (Type 2)
9	**Drive shaft**	**b** (both sides) **r** (right) **l** (left)
10	**Head**	**II / III / IV / GK** (Type 1) **I** (Type 2)
11	**Lift**	**Lift in mm**
12	**Extension VL** **Usable length NL**	**VL in mm** (Type 1) **NL in mm** (Type 2)
13	**Options/Accessories**	According to specification, description or technical drawing (see chapter Accessories/Options)

Screw jacks
HSE High-performance screw jack

A

Features and processing

Working hard: this is what the high-performance screw jacks of the HSE ranges are called upon to do. Covering a load range from 0.5 t to 100 t, they boast a compelling design with a housing made of spheroidal graphite cast iron, whose integral cooling fins allow a high level of heat dissipation to the surroundings. The HSE ranges is optimally used where high loads have to be positioned and lifted precisely at high duty cycles as well as medium and high lifting speeds.

Exemplary reference projects underline the performance and robustness of the HSE ranges: this applies to the high-performance HSE worm gear screw jacks used to lift the filter housing of a natural gas production station as well as those used in a scissor lifting table.

8 different sizes

Lifting capacities from 5 to 1000 kN

Input speeds up to 3000 min^{-1}

- Self-locking trapezoidal screw
- Separate lubrication circuits: Tr screw with grease-lubrication and worm gears with oil lubrication
- Worm gear pairs in two ratio steps (normal „N“ and slow „L“)
- Worm-drive shaft case-hardened and ground
- Patented gearing construction with different heat zones for medium and high lifting speeds

Possible usage according to directive 2014/34/EU (ATEX)

B

C

D

HSE range
Selection table screw jack HSE

Selection table high-performance screw jack HSE										
Size		32[4]	36.1	50.1	63.1	80.1	100.1	125.1	140	200.1
Max. lifting capacity dynamic/static	[kN]	5	10	25	50	100	200	350	on request	1000
Max. tensile load dynamic/static	[kN]	5	10	25	50	100	178	350		1000
Screw Tr[1]		18x6	24x5	40x8	50x9	60x12	70x12	100x16		160x20
Ratio N		4:1	5:1	6:1	7:1	8:1	8:1	10 2/3:1		13 1/3:1
Lift per revolution for ratio N	[mm/per rev.]	1,5	1	1,33	1,28	1,5	1,5	1,5		1,5
Ratio L		16:1	20:1	24:1	28:1	32:1	32:1	32:1		40:1
Lift per revolution for ratio L	[mm/per rev.]	0,375	0,25	0,33	0,32	0,375	0,375	0,5		0,5
Max. drive capacity[2] at T = 20 °C Duty cycle (ED) 20 %/h	[kW]	0,6	0,9	1,5	2,3	3,6	4,8	7,7		17,9
Max. drive capacity[2] at T = 20 °C Duty cycle (ED) 10 %/h	[kW]	1	1,5	2,6	4	6,3	8,4	13,5		31
Screw efficiency rating	[%]	54	41	40	36,5	39,5	35,5	34		28,5
Torque, capacity, turning-speed at 20 % ED/h and 20 °C		see performance tables page 64–67								
Screw torque at max. lifting power	[Nm]	7,4	18,4	80	190	478	1060	2600	on request	11115
Max. permitted drive-shaft torque	[Nm]	12,6	29,4	48,7	168	398	705	975		4260
Mass moment of inertia J[3] Ratio N type 1	[kg cm²]	0,237	0,466	1,247	3,1	11,97	30,11	60,76		-
Mass moment of inertia J[3] Ratio N type 2	[kg cm²]	0,27	0,513	1,364	3,378	13,05	32,21	65,76		-
Mass moment of inertia J[3] Ratio L type 1	[kg cm²]	0,15	0,204	0,638	1,804	8,13	20,91	44,88		-
Mass moment of inertia J[3] Ratio L type 2	[kg cm²]	0,153	0,207	0,645	1,822	8,2	21,04	45,43		-
Max. permitted screw length for compression load	[mm]	see buckling diagrams page 152–153								
Housing material		AlSi 12		EN-GJS-500-7 (GGG 50)						
Weight without stroke length and protection tube	[kg]	2	4	13	25	47	74	145	on request	870
Screw weight per 100 mm stroke	[kg]	0,16	0,23	0,82	1,3	1,79	2,52	5,2		13,82
Amount of lubricant in worm gear	[kg]	0,07	0,15	0,4	0,9	1,5	2,1	5		15,5

Dimension plans type 1: page 68–73, type 2: page 74–76

1) Also applies to Ku screw (see page 157)
2) Max. permitted values for type 1 and Tr screw. Higher values are possible when using type 2 or Ku screw.
3) Referring to 100 mm screw length
4) Size 32 replaced previous size 31.

Possible usage according to directive 2014/34/EU (ATEX)

HSE range
Performance tables (screw jacks with Tr screw)

A

HSE range (High-performance worm gear screw jacks)

Screw jacks with trapezoidal threaded screw (Tr)

Rotary speed, power requirement and permitted lifting speed for ratio N and L with single-start, **lifting (type 1) trapezoidal screw**. All performance data is expressed in terms of dynamic lifting capacity. With duty ratio of < 10 %/h or configuration with rotating screw (type 2), the maximum permitted drive capacities can be increased. In this case, please consult our screw jack specialists.

Screw jacks with ball threaded screw (Ku)

Rotary speed, power requirement and permitted lifting speed for **ratio „N“** with **lifting (type 1) ball screw**. All performance data is expressed in terms of dynamic lifting force with 20 % ED/h. Ball screws (Ku) with higher load capacity are possible with configuration type 2.

Performance table HSE 32 screw Tr 18x6

Speed	Lifting speed		F = 5 kN				F = 4,5 kN				F = 4 kN				F = 3,5 kN				F = 3 kN				F = 2 kN				F = 1 kN			
n	N	L	N		L		N		L		N		L		N		L		N		L		N		L		N		L	
[1/min]	[m/min]		Nm	kW	Nm	kW	Nm	kW	Nm	kW	Nm	kW	Nm	kW	Nm	kW	Nm	kW	Nm	kW	Nm	kW	Nm	kW	Nm	kW	Nm	kW	Nm	kW
3000	4,5	1,125	2,7	0,84	0,9	0,27	2,4	0,75	0,8	0,25	2,1	0,67	0,7	0,22	1,9	0,58	0,6	0,19	1,6	0,5	0,5	0,16	1,1	0,3	0,3	0,1	0,6	0,2	0,3	0,1
2500	3,75	0,938	2,7	0,7	0,9	0,23	2,4	0,63	0,8	0,21	2,1	0,56	0,7	0,19	1,9	0,49	0,6	0,16	1,6	0,42	0,5	0,14	1,1	0,3	0,3	0,1	0,6	0,2	0,3	0,1
2000	3	0,75	2,7	0,56	0,9	0,19	2,4	0,51	0,8	0,17	2,2	0,45	0,7	0,15	1,9	0,4	0,6	0,13	1,6	0,34	0,5	0,11	1,1	0,2	0,3	0,1	0,6	0,2	0,3	0,1
1500	2,25	0,563	2,7	0,43	0,9	0,15	2,5	0,39	0,8	0,13	2,2	0,34	0,8	0,12	1,9	0,3	0,7	0,1	1,6	0,26	0,6	0,1	1,1	0,2	0,3	0,1	0,6	0,2	0,3	0,1
1000	1,5	0,375	2,8	0,29	1	0,1	2,5	0,26	1	0,1	2,2	0,23	0,8	0,1	2	0,2	0,7	0,1	1,7	0,18	0,6	0,1	1,1	0,1	0,4	0,1	0,6	0,2	0,3	0,1
750	1,13	0,281	2,8	0,22	1	0,1	2,5	0,2	1,3	0,1	2,3	0,18	0,8	0,1	2	0,16	0,7	0,1	1,7	0,13	0,6	0,1	1,1	0,1	0,4	0,1	0,6	0,2	0,3	0,1
600	0,9	0,225	2,9	0,18	1	0,1	2,6	0,16	1,3	0,1	2,3	0,14	0,8	0,1	2	0,13	0,7	0,1	1,7	0,11	0,6	0,1	1,1	0,1	0,4	0,1	0,6	0,2	0,3	0,1
500	0,75	0,188	2,9	0,15	1	0,1	2,6	0,14	1,5	0,1	2,3	0,12	0,9	0,1	2	0,11	0,8	0,1	1,7	0,1	0,7	0,1	1,1	0,1	0,4	0,1	0,6	0,2	0,3	0,1
300	0,45	0,113	2,5	0,1	1,3	0,1	2,8	0,1	1,5	0,1	2,4	0,1	0,9	0,1	2,1	0,1	0,8	0,1	1,8	0,1	0,7	0,1	1,1	0,1	0,4	0,1	0,6	0,2	0,3	0,1
100	0,15	0,038	2,5	0,1	1,3	0,1	2,8	0,1	1,5	0,1	2,5	0,1	1	0,1	2,1	0,1	0,9	0,1	1,8	0,1	0,7	0,1	1,1	0,1	0,5	0,1	0,6	0,2	0,3	0,1
50	0,08	0,019	2,5	0,1	1,3	0,1	2,8	0,1	1,5	0,1	2,5	0,1	1	0,1	2,2	0,1	0,9	0,1	1,9	0,1	0,8	0,1	1,1	0,1	0,5	0,1	0,6	0,2	0,3	0,1

Performance table HSE 36.1 screw Tr 24x5

Speed	Lifting speed		F = 10 kN				F = 9 kN				F = 8 kN				F = 7 kN				F = 6 kN				F = 4 kN				F = 2 kN			
n	N	L	N		L		N		L		N		L		N		L		N		L		N		L		N		L	
[1/min]	[m/min]		Nm	kW	Nm	kW	Nm	kW	Nm	kW	Nm	kW	Nm	kW	Nm	kW	Nm	kW	Nm	kW	Nm	kW	Nm	kW	Nm	kW	Nm	kW	Nm	kW
3000	3	0,75	4,4	1,4	1,5	0,5	4	1,3	1,3	0,4	3,5	1,1	1,2	0,4	3,1	1	1	0,4	2,7	0,9	0,9	0,3	1,8	0,6	0,6	0,2	0,9	0,3	0,3	0,1
2500	2,5	0,625	4,4	1,2	1,5	0,4	4	1,1	1,3	0,4	3,5	1	1,2	0,3	3,1	0,8	1	0,3	2,7	0,7	0,9	0,3	1,8	0,5	0,6	0,2	0,9	0,3	0,3	0,1
2000	2	0,5	4,5	1	1,5	0,3	4	0,9	1,4	0,3	3,6	0,8	1,2	0,3	3,1	0,7	1,1	0,3	2,7	0,6	0,9	0,2	1,8	0,4	0,6	0,2	0,9	0,2	0,3	0,1
1500	1,5	0,375	4,5	0,7	1,6	0,3	4,1	0,7	1,4	0,3	3,6	0,6	1,3	0,2	3,2	0,5	1,1	0,2	2,7	0,5	1	0,2	1,8	0,3	0,6	0,1	0,9	0,2	0,3	0,1
1000	1	0,25	4,6	0,5	1,7	0,2	4,2	0,5	1,5	0,2	3,7	0,4	1,3	0,2	3,3	0,4	1,2	0,2	2,8	0,3	1	0,1	1,9	0,2	0,7	0,1	0,9	0,1	0,3	0,1
750	0,75	0,188	4,7	0,4	1,7	0,2	4,3	0,4	1,6	0,2	3,8	0,3	1,4	0,1	3,3	0,3	1,2	0,1	2,8	0,2	1	0,1	1,9	0,2	0,7	0,1	1	0,1	0,4	0,1
500	0,5	0,125	4,9	0,3	1,8	0,1	4,4	0,3	1,7	0,1	3,9	0,2	1,5	0,1	3,4	0,2	1,3	0,1	2,9	0,2	1,1	0,1	2	0,1	0,7	0,1	1	0,1	0,4	0,1
300	0,3	0,075	5	0,2	2	0,1	4,5	0,2	1,8	0,1	4	0,2	1,6	0,1	3,5	0,1	1,4	0,1	3	0,1	1,2	0,1	2	0,1	0,8	0,1	1	0,1	0,4	0,1
100	0,1	0,025	5,2	0,1	2,1	0,1	4,7	0,1	1,9	0,1	4,2	0,1	1,7	0,1	3,7	0,1	1,5	0,1	3,1	0,1	1,3	0,1	2,1	0,1	0,9	0,1	1,1	0,1	0,4	0,1
50	0,05	0,013	5,3	0,1	2,2	0,1	4,8	0,1	2	0,1	4,3	0,1	1,8	0,1	3,7	0,1	1,6	0,1	3,2	0,1	1,3	0,1	2,1	0,1	0,9	0,1	1,1	0,1	0,4	0,1

B

C

D

Max. duty ratio at 20 °C ambient temperature: 20 %/h 10 %/h static only (dynamic not permitted)

HSE range
Performance tables (screw jacks with Tr screw)

Performance table HSE 50.1 screw Tr 40x8

Speed	Lifting speed		F = 25 kN				F = 22,5 kN				F = 20 kN				F = 17,5 kN				F = 15 kN				F = 10 kN				F = 5 kN			
n	N	L	N		L		N		L		N		L		N		L		N		L		N		L		N		L	
[1/min]	[m/min]		Nm	kW	Nm	kW	Nm	kW	Nm	kW	Nm	kW	Nm	kW	Nm	kW	Nm	kW	Nm	kW	Nm	kW	Nm	kW	Nm	kW	Nm	kW	Nm	kW
3000	4	1	15,4	4,8	4,9	1,5	13,8	4,3	4,4	1,4	12,3	3,9	3,9	1,2	10,8	3,4	3,4	1,1	9,2	2,9	2,9	0,9	6,2	1,9	2	0,6	3,1	1	1	0,3
2500	3,33	0,833	15,5	4,1	5	1,3	13,9	3,6	4,5	1,2	12,4	3,2	4	1	10,8	2,8	3,5	0,9	9,3	2,4	3	0,8	6,2	1,6	2	0,5	3,1	0,8	1	0,3
2000	2,67	0,667	15,6	3,3	5,1	1,1	14	2,9	4,6	1	12,5	2,6	4,1	0,8	10,9	2,3	3,5	0,7	9,4	2	3	0,6	6,2	1,3	2	0,4	3,1	0,7	1	0,2
1500	2	0,5	15,8	2,5	5,2	0,8	14,2	2,2	4,7	0,7	12,6	2	4,2	0,7	11,1	1,7	3,7	0,6	9,5	1,5	3,1	0,5	6,3	1	2,1	0,3	3,2	0,5	1	0,2
1000	1,33	0,333	16,1	1,7	5,5	0,6	14,5	1,5	5	0,5	12,9	1,4	4,4	0,5	11,3	1,2	3,9	0,4	9,7	1	3,3	0,3	6,5	0,7	2,2	0,2	3,2	0,3	1,1	0,1
750	1	0,25	16,4	1,3	5,8	0,5	14,8	1,2	5,2	0,4	13,1	1	4,6	0,4	11,5	0,9	4,1	0,3	9,9	0,8	3,5	0,3	6,6	0,5	2,3	0,2	3,3	0,3	1,2	0,1
500	0,67	0,167	16,8	0,9	6,2	0,3	15,2	0,8	5,6	0,3	13,5	0,7	4,9	0,3	11,8	0,6	4,3	0,2	10,1	0,5	3,7	0,2	6,7	0,3	2,5	0,1	3,4	0,2	1,2	0,1
300	0,4	0,1	17,4	0,5	6,6	0,2	15,7	0,5	6	0,2	13,9	0,4	5,3	0,2	12,2	0,4	4,6	0,1	10,4	0,3	4	0,1	7	0,2	2,7	0,1	3,5	0,1	1,3	0,1
100	0,13	0,033	18,4	0,2	7,5	0,1	16,5	0,2	6,7	0,1	14,7	0,1	6	0,1	12,9	0,1	5,2	0,1	11	0,1	4,5	0,1	7,3	0,1	3	0,1	3,7	0,1	1,5	0,1
50	0,07	0,017	18,7	0,1	7,7	0,1	16,9	0,1	6,9	0,1	15	0,1	6,2	0,1	13,1	0,1	5,4	0,1	11,2	0,1	4,6	0,1	7,5	0,1	3,1	0,1	3,7	0,1	1,5	0,1

Performance table HSE 63.1 screw Tr 50x9

Speed	Lifting speed		F = 50 kN				F = 40 kN				F = 30 kN				F = 20 kN				F = 10 kN				F = 5 kN				F = 2,5 kN			
n	N	L	N		L		N		L		N		L		N		L		N		L		N		L		N		L	
[1/min]	[m/min]		Nm	kW	Nm	kW	Nm	kW	Nm	kW	Nm	kW	Nm	kW	Nm	kW	Nm	kW	Nm	kW	Nm	kW	Nm	kW	Nm	kW	Nm	kW	Nm	kW
3000	3,86	0,964	31,5	9,9	10,2	3,2	25,2	7,9	8,1	2,6	18,9	5,9	6,1	1,9	12,6	4	4,1	1,3	6,3	2	2	0,6	3,1	1	1	0,3	1,6	0,5	0,5	0,2
2500	3,21	0,804	31,7	8,3	10,3	2,7	25,3	6,6	8,3	2,2	19	5	6,2	1,6	12,7	3,3	4,1	1,1	6,3	1,7	2,1	0,5	3,2	0,8	1	0,3	1,6	0,4	0,5	0,1
2000	2,57	0,643	31,9	6,7	10,5	2,2	25,5	5,3	8,4	1,8	19,1	4	6,3	1,3	12,7	2,7	4,2	0,9	6,4	1,3	2,1	0,4	3,2	0,7	1	0,2	1,6	0,3	0,5	0,1
1500	1,93	0,482	32,3	5,1	10,8	1,7	25,8	4,1	8,7	1,4	19,4	3	6,5	1	12,9	2	4,3	0,7	6,5	1	2,2	0,3	3,2	0,5	1,1	0,2	1,6	0,3	0,5	0,1
1000	1,29	0,321	33	3,5	11,5	1,2	26,4	2,8	9,2	1	19,8	2,1	6,9	0,7	13,2	1,4	4,6	0,5	6,6	0,7	2,3	0,2	3,3	0,3	1,1	0,1	1,7	0,2	0,6	0,1
750	0,96	0,241	33,6	2,6	12,1	0,9	26,9	2,1	9,7	0,8	20,1	1,6	7,2	0,6	13,4	1,1	4,8	0,4	6,7	0,5	2,4	0,2	3,4	0,3	1,2	0,1	1,7	0,1	0,6	0,1
500	0,64	0,161	34,6	1,8	13	0,7	27,7	1,4	10,4	0,5	20,8	1,1	7,8	0,4	13,8	0,7	5,2	0,3	6,9	0,4	2,6	0,1	3,5	0,2	1,3	0,1	1,7	0,1	0,7	0,1
300	0,39	0,096	36,1	1,1	14,3	0,4	28,9	0,9	11,4	0,3	21,7	0,7	8,6	0,2	14,4	0,4	5,7	0,2	7,2	0,2	2,9	0,1	3,6	0,1	1,4	0,1	1,8	0,1	0,7	0,1
100	0,13	0,032	38,9	0,4	16,6	0,1	31,1	0,3	13,3	0,1	23,3	0,2	10	0,1	15,6	0,2	6,6	0,1	7,8	0,1	3,3	0,1	3,9	0,1	1,7	0,1	1,9	0,1	0,8	0,1
50	0,06	0,016	40	0,2	17,5	0,1	32	0,2	14	0,1	24	0,1	10,5	0,1	16	0,1	7	0,1	8	0,1	3,5	0,1	4	0,1	1,8	0,1	2	0,1	0,9	0,1

Performance table HSE 80.1 screw Tr 60x12

Speed	Lifting speed		F = 100 kN				F = 80 kN				F = 60 kN				F = 40 kN				F = 20 kN				F = 10 kN				F = 5 kN			
n	N	L	N		L		N		L		N		L		N		L		N		L		N		L		N		L	
[1/min]	[m/min]		Nm	kW	Nm	kW	Nm	kW	Nm	kW	Nm	kW	Nm	kW	Nm	kW	Nm	kW	Nm	kW	Nm	kW	Nm	kW	Nm	kW	Nm	kW	Nm	kW
3000	4,5	1,125	67,7	21,3	21,7	6,8	54,2	17	17,3	5,5	40,6	12,8	13	4,1	27,1	8,5	8,7	2,7	13,6	4,3	4,3	1,4	6,8	2,2	2,2	0,7	3,4	1,1	1,1	0,4
2500	3,75	0,938	68	17,8	21,9	5,8	54,4	14,3	17,5	4,6	40,8	10,7	13,2	3,5	27,2	7,1	8,8	2,3	13,6	3,6	4,4	1,2	6,8	1,8	2,2	0,6	3,4	0,9	1,1	0,3
2000	3	0,75	68,4	14,4	22,3	4,7	54,8	11,5	17,9	3,8	41,1	8,6	13,4	2,8	27,4	5,8	9	1,9	13,7	2,9	4,5	1	6,9	1,5	2,3	0,5	3,4	0,8	1,1	0,3
1500	2,25	0,563	69,2	10,9	23	3,6	55,4	8,7	18,4	2,9	41,6	6,5	13,8	2,2	27,7	4,4	9,2	1,5	13,9	2,2	4,6	0,8	6,9	1,1	2,3	0,4	3,5	0,6	1,2	0,2
1000	1,5	0,375	70,7	7,4	24,4	2,6	56,6	5,9	19,5	2,1	42,5	4,5	14,6	1,6	28,3	3	9,8	1,1	14,2	1,5	4,9	0,6	7,1	0,8	2,5	0,3	3,6	0,4	1,2	0,2
750	1,125	0,281	72,1	5,7	25,7	2	57,7	4,6	20,5	1,6	43,3	3,4	15,4	1,2	28,9	2,3	10,3	0,8	14,4	1,2	5,1	0,4	7,2	0,6	2,6	0,2	3,6	0,3	1,3	0,1
500	0,75	0,188	74,6	3,9	27,9	1,5	59,7	3,1	22,3	1,2	44,8	2,4	16,7	0,9	29,9	1,6	11,2	0,6	14,9	0,8	5,6	0,3	7,5	0,4	2,8	0,2	3,7	0,2	1,4	0,1
300	0,45	0,113	78,3	2,5	31,3	1	62,7	2	25	0,8	47	1,5	18,8	0,6	31,4	1	12,5	0,4	15,7	0,5	6,3	0,2	7,9	0,3	3,2	0,1	3,9	0,1	1,6	0,1
100	0,15	0,038	86,2	0,9	38,3	0,4	69	0,7	30,6	0,3	51,8	0,6	23	0,3	34,5	0,4	15,3	0,2	17,3	0,2	7,7	0,1	8,6	0,1	3,8	0,1	4,3	0,1	1,9	0,1
50	0,075	0,019	89,7	0,5	41,3	0,2	71,8	0,4	33	0,2	53,8	0,3	24,8	0,2	35,9	0,2	16,5	0,1	18	0,1	8,3	0,1	9	0,1	4,2	0,1	4,5	0,1	2,1	0,1

Performance table HSE 100.1 screw Tr 70x12

Speed	Lifting speed		F = 200 kN				F = 160 kN				F = 120 kN				F = 100 kN				F = 75 kN				F = 50 kN				F = 25 kN			
n	N	L	N		L		N		L		N		L		N		L		N		L		N		L		N		L	
[1/min]	[m/min]		Nm	kW	Nm	kW	Nm	kW	Nm	kW	Nm	kW	Nm	kW	Nm	kW	Nm	kW	Nm	kW	Nm	kW	Nm	kW	Nm	kW	Nm	kW	Nm	kW
3000	4,5	1,125	148	46,4	45,9	14,4	118	37,1	36,7	11,6	88,6	27,9	27,6	8,7	73,9	23,2	23	7,2	55,4	17,4	17,2	5,4	37	11,6	11,5	3,6	18,5	5,8	5,8	1,8
2500	3,75	0,938	148	38,8	46,3	12,1	119	31,1	37	9,7	88,9	23,3	27,8	7,3	74,1	19,4	23,2	6,1	55,6	14,6	17,4	4,6	37,1	9,7	11,6	3	18,6	4,9	5,8	1,6
2000	3	0,75	149	31,2	46,9	9,9	119	25	37,5	7,9	89,3	18,7	28,1	5,9	74,4	15,6	23,5	4,9	55,8	11,7	17,6	3,7	37,2	7,8	11,7	2,5	18,6	3,9	5,9	1,3
1500	2,25	0,563	150	23,6	48	7,6	120	18,9	38,4	6	90	14,2	28,8	4,6	75,1	11,8	24	3,8	56,3	8,9	18	2,9	37,5	5,9	12	1,9	18,8	3	6	1
1000	1,5	0,375	153	16	50,3	5,3	122	12,8	40,2	4,2	91,6	9,6	30,2	3,2	76,3	8	25,2	2,7	57,3	6	18,9	2	38,2	4	12,6	1,3	19,1	2	6,3	0,7
750	1,125	0,281	155	12,2	52,6	4,2	124	9,8	42,1	3,3	93,1	7,3	31,6	2,5	77,6	6,1	26,3	2,1	58,2	4,6	19,7	1,6	38,8	3,1	13,2	1	19,4	1,6	6,6	0,6
500	0,75	0,188	160	8,4	56,9	3	128	6,7	45,5	2,4	96	5,1	34,2	1,8	80	4,2	28,5	1,5	60	3,2	21,4	1,1	40	2,1	14,2	0,8	20	1,1	7,1	0,4
300	0,45	0,113	168	5,3	63,9	2	134	4,2	51,2	1,6	101	3,2	38,4	1,2	83,9	2,7	32	1	62,9	2	24	0,8	42	1,4	16	0,5	21	0,7	8	0,3
100	0,15	0,038	187	2	80,8	0,9	150	1,6	64,6	0,7	112	1,2	48,5	0,6	93,3	1	40,4	0,5	70	0,8	30,3	0,4	46,7	0,5	20,2	0,2	23,4	0,3	10,1	0,2
50	0,075	0,019	196	1,1	88,9	0,5	157	0,8	71,1	0,4	118	0,6	53,4	0,3	98	0,6	44,5	0,3	73,5	0,4	33,4	0,2	49	0,3	22,2	0,2	24,5	0,2	11,1	0,2

Max. duty ratio at 20 °C ambient temperature: 20 %/h | 10 %/h | static only (dynamic not permitted)

HSE range
Performance tables (screw jacks with Tr screw)

A

Performance table HSE 125.1 screw Tr 100x16

Speed	Lifting speed		F = 350 kN				F = 300 kN				F = 250 kN				F = 200 kN				F = 150 kN				F = 100 kN				F = 50 kN			
n	N	L	N		L		N		L		N		L		N		L		N		L		N		L		N		L	
[1/min]	[m/min]		Nm	kW	Nm	kW	Nm	kW	Nm	kW	Nm	kW	Nm	kW	Nm	kW	Nm	kW	Nm	kW	Nm	kW	Nm	kW	Nm	kW	Nm	kW	Nm	kW
3000	4,5	1,5	271	85	106	33	232	73	91	29	194	61	76	24	155	49	61	19	116	37	45	15	78	25	30	9,5	39	13	15	4,8
2500	3,75	1,25	272	71	106	28	233	61	91	24	194	51	76	20	155	41	61	16	117	31	46	12	78	21	30	8	39	11	15	4
2000	3	1	273	57	107	23	234	49	92	19	195	41	77	16	156	33	62	13	117	25	46	9,6	78	17	31	6,4	39	8,2	15	3,2
1500	2,25	0,75	275	43	109	17	236	37	93	15	196	31	78	13	157	25	62	9,8	118	19	47	7,4	79	13	31	4,9	39	6,2	16	2,5
1000	1,5	0,5	279	29	113	12	239	25	97	10	199	21	81	8,5	159	17	65	6,8	120	13	49	5,1	80	8,4	32	3,4	40	4,2	16	1,7
750	1,13	0,38	284	23	117	9,2	243	19	100	7,9	203	16	84	6,6	162	13	67	5,3	122	9,6	50	4	81	6,4	34	2,7	41	3,2	17	1,4
500	0,75	0,25	292	16	126	6,6	251	13	108	5,7	209	11	90	4,7	167	8,8	72	3,8	126	6,6	54	2,8	84	4,4	36	1,9	42	2,2	18	1
300	0,45	0,15	308	10	140	4,4	264	8,3	120	3,8	220	6,9	100	3,2	176	5,6	80	2,6	132	4,2	60	1,9	88	2,8	40	1,3	44	1,4	20	0,7
100	0,15	0,05	349	3,7	178	1,9	299	3,2	153	1,6	250	2,7	127	1,4	200	2,1	102	1,1	150	1,6	77	0,8	100	1,1	51	0,6	50	0,6	26	0,3
50	0,08	0,03	372	2	198	1,1	318	1,7	170	0,9	265	1,4	142	0,8	212	1,2	114	0,6	160	0,9	85	0,5	106	0,6	57	0,3	53	0,3	29	0,2

Performance table HSE 200.1 screw Tr 160x20

Speed	Lifting speed		F = 1000 kN				F = 800 kN				F = 600 kN				F = 400 kN				F = 200 kN				F = 100 kN				F = 50 kN			
n	N	L	N		L		N		L		N		L		N		L		N		L		N		L		N		L	
[1/min]	[m/min]		Nm	kW	Nm	kW	Nm	kW	Nm	kW	Nm	kW	Nm	kW	Nm	kW	Nm	kW	Nm	kW	Nm	kW	Nm	kW	Nm	kW	Nm	kW	Nm	kW
3000	4,5	1,5	905	284	342	108	724	228	274	86	543	171	205	65	362	114	137	43	181	57	69	22	91	29	34	11	46	15	17	5,4
2500	3,75	1,25	906	237	343	90	725	190	274	72	544	143	206	54	362	95	137	36	181	48	69	18	91	24	34	9	46	12	17	4,5
2000	3	1	907	190	344	72	726	152	275	58	545	114	207	44	363	76	138	29	182	38	69	15	91	19	35	7,2	46	10	17	3,6
1500	2,25	0,75	911	143	347	55	729	115	278	44	547	86	208	33	364	58	139	22	182	29	70	11	91	15	35	5,5	46	7,2	18	2,8
1000	1,5	0,5	919	96	354	37	735	77	283	30	551	58	213	23	368	39	142	15	184	19	71	7,5	92	10	36	3,8	46	4,8	18	1,9
750	1,13	0,38	928	73	363	29	742	59	290	23	557	44	218	17	371	29	145	12	186	15	73	5,7	93	7,3	37	2,9	47	3,7	18	1,5
500	0,75	0,25	947	50	381	20	758	40	305	16	569	30	229	12	379	20	153	8	190	10	77	4	95	5	38	2	48	2,5	19	1
300	0,45	0,15	988	31	419	13	790	25	335	11	593	19	252	7,9	395	13	168	5,3	198	6,3	84	2,7	99	3,1	42	1,4	50	1,6	21	0,7
100	0,15	0,05	1128	12	550	5,8	903	9,5	440	4,7	677	7,1	330	3,5	452	4,8	220	2,3	226	2,4	110	1,2	113	1,2	55	0,6	57	0,6	28	0,3
50	0,08	0,03	1223	6,4	637	3,4	978	5,1	509	2,7	734	3,9	382	2	489	2,6	255	1,4	245	1,3	128	0,7	123	0,7	64	0,4	61	0,3	32	0,2

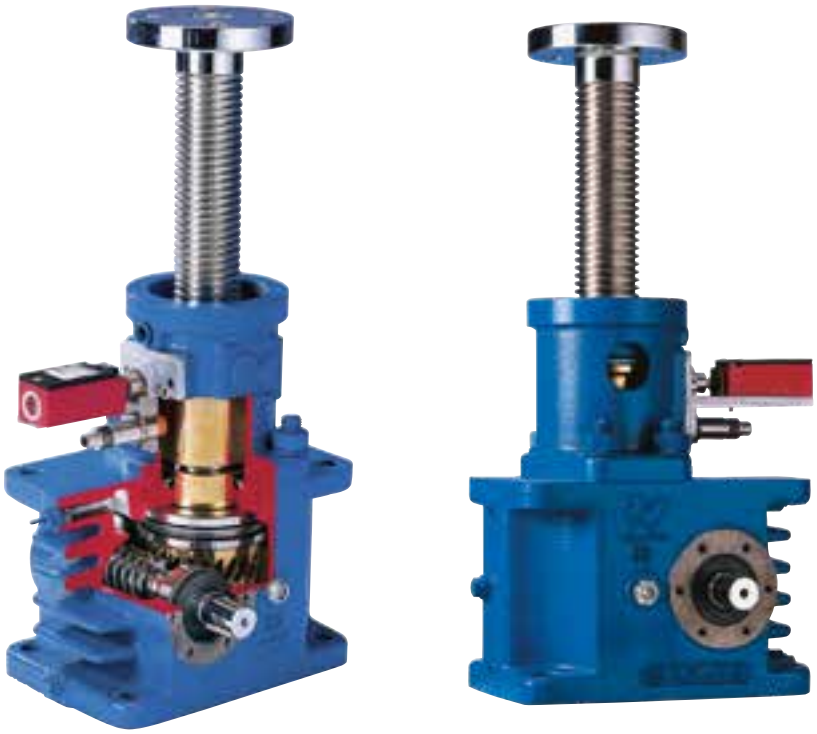

High-performance worm gear screw jack HSE, type 1 with long safety nut acc. Directive DGUV R100-500, chapter 2.10

Max. duty ratio at 20 °C ambient temperature: 20 %/h 10 %/h static only (dynamic not permitted)

HSE range
Performance tables (screw jacks with Ku screw)

Performance table HSE 36.1 screw Ku 20x10; 20x5

Speed	Lifting speed		F = 10 kN				F = 9 kN				F = 8 kN				F = 7 kN				F = 6 kN				F = 4 kN				F = 2 kN			
n	20x10	20x5	20x10		20x5		20x10		20x5		20x10		20x5		20x10		20x5		20x10		20x5		20x10		20x5		20x10		20x5	
[1/min]	[m/min]		Nm	kW	Nm	kW	Nm	kW	Nm	kW	Nm	kW	Nm	kW	Nm	kW	Nm	kW	Nm	kW	Nm	kW	Nm	kW	Nm	kW	Nm	kW	Nm	kW
3000	6	3	4,2	1,3	2,1	0,7	3,8	1,2	1,9	0,6	3,4	1,1	1,7	0,5	2,9	0,9	1,5	0,5	2,5	0,8	1,3	0,4	1,7	0,5	0,8	0,3	0,8	0,3	0,1	0,1
2500	5	2,5	4,2	1,1	2,1	0,6	3,8	1	1,9	0,5	3,4	0,9	1,7	0,4	3	0,8	1,5	0,4	2,5	0,7	1,3	0,3	1,7	0,4	0,8	0,2	0,8	0,2	0,1	0,1
2000	4	2	4,3	0,9	2,1	0,4	3,8	0,8	1,9	0,4	3,4	0,7	1,7	0,4	3	0,6	1,5	0,3	2,6	0,5	1,3	0,3	1,7	0,4	0,9	0,2	0,9	0,2	0,1	0,1
1500	3	1,5	4,3	0,7	2,2	0,3	3,9	0,6	1,9	0,3	3,5	0,5	1,7	0,3	3	0,5	1,5	0,2	2,6	0,4	1,3	0,2	1,7	0,3	0,9	0,1	0,9	0,1	0,1	0,1
1000	2	1	4,4	0,5	2,2	0,2	4	0,4	2	0,2	3,5	0,4	1,8	0,2	3,1	0,3	1,5	0,2	2,7	0,3	1,3	0,1	1,8	0,2	0,9	0,1	0,9	0,1	0,2	0,1
750	1,5	0,75	4,5	0,4	2,2	0,2	4	0,3	2	0,2	3,6	0,3	1,8	0,1	3,1	0,2	1,6	0,1	2,7	0,2	1,3	0,1	1,8	0,1	0,9	0,1	0,9	0,1	0,2	0,1

Performance table HSE 50.1 screw Ku 32x10; 32x5

Speed	Lifting speed		F = 25 kN				F = 22,5 kN				F = 20 kN				F = 17,5 kN				F = 15 kN				F = 10 kN				F = 5 kN			
n	32x10	32x5	32x10		32x5		32x10		32x5		32x10		32x5		32x10		32x5		32x10		32x5		32x10		32x5		32x10		32x5	
[1/min]	[m/min]		Nm	kW	Nm	kW	Nm	kW	Nm	kW	Nm	kW	Nm	kW	Nm	kW	Nm	kW	Nm	kW	Nm	kW	Nm	kW	Nm	kW	Nm	kW	Nm	kW
3000	5	2,5	8,5	2,7	4,3	1,4	7,7	2,4	3,8	1,2	6,8	2,1	3,4	1,1	6	1,9	3	1	5,1	1,6	2,6	0,8	3,4	1,1	1,7	0,6	1,7	0,5	0,9	0,3
2500	4,2	2,1	8,6	2,2	4,3	1,1	7,7	2	3,9	1	6,9	1,8	3,4	0,9	6	1,6	3	0,8	5,2	1,3	2,6	0,7	3,4	0,9	1,7	0,5	1,7	0,4	0,9	0,2
2000	3,4	1,7	8,7	1,8	4,3	0,9	7,8	1,6	3,9	0,8	6,9	1,4	3,5	0,7	6,1	1,3	3	0,7	5,2	1,1	2,6	0,6	3,5	0,7	1,7	0,4	1,7	0,4	0,9	0,2
1500	2,4	1,2	8,8	1,4	4,4	0,7	7,9	1,2	3,9	0,6	7	1,1	3,5	0,6	6,1	1	3,1	0,5	5,3	0,8	2,6	0,4	3,5	0,6	1,8	0,3	1,8	0,3	0,9	0,2
1000	1,6	0,8	8,9	0,9	4,5	0,5	8	0,8	4	0,4	7,2	0,7	3,6	0,4	6,3	0,7	3,1	0,4	5,4	0,6	2,7	0,3	3,6	0,4	1,8	0,2	1,8	0,2	0,9	0,1
750	1,2	0,6	9,1	0,7	4,6	0,4	8,2	0,6	4,1	0,3	7,3	0,6	3,6	0,3	6,4	0,5	3,2	0,3	5,5	0,4	2,7	0,2	3,6	0,3	1,8	0,2	1,8	0,1	0,9	0,1

Performance table HSE 63.1 screw Ku 40x24; 40x10

Speed	Lifting speed		F = 50 kN				F = 40 kN				F = 30 kN				F = 20 kN				F = 10 kN				F = 5 kN				F = 2,5 kN			
n	40x24	40x10	40x24		40x10		40x24		40x10		40x24		40x10		40x24		40x10		40x24		40x10		40x24		40x10		40x24		40x10	
[1/min]	[m/min]		Nm	kW	Nm	kW	Nm	kW	Nm	kW	Nm	kW	Nm	kW	Nm	kW	Nm	kW	Nm	kW	Nm	kW	Nm	kW	Nm	kW	Nm	kW	Nm	kW
3000	10,3	4,3	35	11	14	4,6	28	8,7	12	3,7	21	6,5	8,7	2,7	14	4,4	5,8	1,8	6,9	2,2	2,9	0,9	3,5	1,1	1,4	0,5	1,7	0,5	0,7	0,3
2500	8,57	3,55	35	9,1	15	3,8	28	7,3	12	3,1	21	5,5	8,7	2,3	14	3,7	5,8	1,5	7	1,8	2,9	0,8	3,5	0,9	1,5	0,4	1,7	0,5	0,7	0,2
2000	6,86	2,85	35	7,4	15	3,1	28	5,9	12	2,5	21	4,4	8,8	1,9	14	2,9	5,9	1,3	7	1,5	2,9	0,6	3,5	0,7	1,5	0,3	1,8	0,4	0,7	0,2
1500	5,14	2,15	36	5,6	15	2,4	28	4,5	12	1,9	21	3,4	8,9	1,4	14	2,2	5,9	1	7,1	1,1	3	0,5	3,6	0,6	1,5	0,3	1,8	0,3	0,7	0,1
1000	3,43	1,45	36	3,8	15	1,6	29	3	12	1,3	22	2,3	9,1	1	15	1,5	6,1	0,7	7,3	0,8	3	0,3	3,6	0,4	1,5	0,2	1,8	0,2	0,8	0,1
750	2,57	1,05	37	2,9	15	1,2	30	2,3	12	1	22	1,7	9,3	0,8	15	1,2	6,2	0,5	7,4	0,6	3,1	0,3	3,7	0,3	1,5	0,1	1,9	0,1	0,8	0,1

Performance table HSE 80.1 screw Ku 50x24; 63x10

Speed	Lifting speed		F = 100 kN				F = 80 kN				F = 60 kN				F = 40 kN				F = 20 kN				F = 10 kN				F = 5 kN			
n	50x24	63x10	50x24		63x10		50x24		63x10		50x24		63x10		50x24		63x10		50x24		63x10		50x24		63x10		50x24		63x10	
[1/min]	[m/min]		Nm	kW	Nm	kW	Nm	kW	Nm	kW	Nm	kW	Nm	kW	Nm	kW	Nm	kW	Nm	kW	Nm	kW	Nm	kW	Nm	kW	Nm	kW	Nm	kW
3000	9	3,7	60	19	25	7,9	48	15	20	6,3	36	11	15	4,7	24	7,5	10	3,1	12	3,8	5	1,6	6	1,9	2,5	0,8	3	0,9	1,3	0,4
2500	7,4	3,1	60	16	25	6,6	48	13	20	5,3	36	9,5	15	4	24	6,3	10	2,6	12	3,2	5	1,3	6	1,6	2,5	0,7	3	0,8	1,3	0,3
2000	6	2,5	61	13	25	5,3	48	10	20	4,2	36	7,6	15	3,2	24	5,1	10	2,1	12	2,5	5	1	6,1	1,3	2,5	0,5	3	0,6	1,3	0,3
1500	4,4	1,85	61	9,6	26	4	49	7,7	20	3,2	37	5,8	15	2,4	24	3,8	10	1,6	12	1,9	5,1	0,8	6,1	1	2,6	0,4	3,1	0,5	1,3	0,2
1000	3	1,25	62	6,5	26	2,7	50	5,2	21	2,2	37	3,9	16	1,6	25	2,6	10	1,1	12	1,3	5,2	0,5	6,2	0,7	2,6	0,3	3,1	0,3	1,3	0,1
750	2,3	0,95	64	5	27	2,1	51	4	21	1,7	38	3	16	1,3	25	2	11	0,8	13	1	5,3	0,4	6,4	0,5	2,7	0,2	3,2	0,2	1,3	0,1

Performance table HSE 100.1 screw Ku 63x20; 80x10

Speed	Lifting speed		F = 200 kN				F = 160 kN				F = 120 kN				F = 100 kN				F = 75 kN				F = 50 kN				F = 25 kN			
n	63x20	80x10	63x20		80x10		63x20		80x10		63x20		80x10		63x20		80x10		63x20		80x10		63x20		80x10		63x20		80x10	
[1/min]	[m/min]		Nm	kW	Nm	kW	Nm	kW	Nm	kW	Nm	kW	Nm	kW	Nm	kW	Nm	kW	Nm	kW	Nm	kW	Nm	kW	Nm	kW	Nm	kW	Nm	kW
3000	7,5	3,75	98	31	49	15	79	25	39	12	59	19	29	9,3	49	15	25	7,7	37	12	18	5,8	25	7,7	12	3,9	12	3,9	6,1	2
2500	6,2	3,1	99	26	49	13	79	21	39	10	59	16	30	7,8	49	13	25	6,5	37	9,7	19	4,9	25	6,5	12	3,3	12	3,2	6,2	1,6
2000	5	2,5	99	21	50	10	79	17	40	8,3	59	13	30	6,3	50	10	25	5,2	37	7,8	19	3,9	25	5,2	12	2,6	12	2,6	6,2	1,3
1500	3,7	1,85	100	16	50	7,9	80	13	40	6,3	60	9,4	30	4,7	50	7,8	25	3,9	37	5,9	19	3	25	3,9	12	2	12	2	6,2	1
1000	2,5	1,25	101	11	51	5,3	81	8,5	41	4,3	61	6,4	30	3,2	51	5,3	25	2,7	38	4	19	2	25	2,7	13	1,4	13	1,3	6,3	0,7
750	1,9	0,95	103	8,1	51	4,1	82	6,5	41	3,3	62	4,9	31	2,5	51	4	26	2	39	3	19	1,5	26	2	13	1	13	1	6,4	0,5

Service life > 500 hours | Service life 100 to 500 hours | static only (dynamic not permitted)

HSE range
Technical drawings: Type 1

A

B

C

D

Technical drawings HSE: Type 1, standard

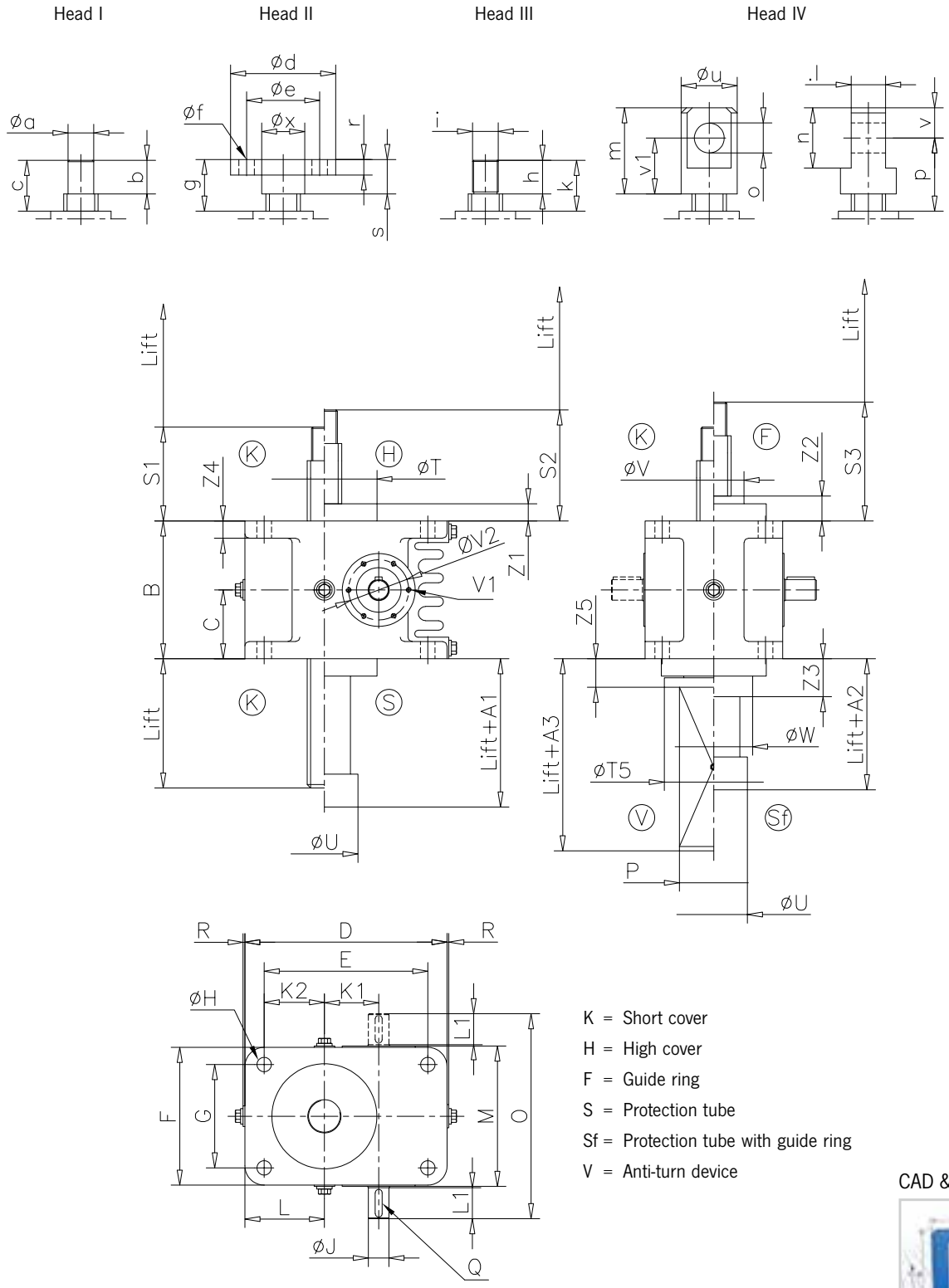

K = Short cover
H = High cover
F = Guide ring
S = Protection tube
Sf = Protection tube with guide ring
V = Anti-turn device

CAD & go

HSE range
Dimensions: Type 1

Dimensions HSE: Type 1, standard									
Size	32*	36.1	50.1	63.1	80.1	100.1	125.1	140	200.1
Screw	Tr 18x6	Tr 24x5	Tr 40x8	Tr 50x9	Tr 60x12	Tr 70x12	Tr 100x16	Tr 120x16	Tr 160x20
A 1	22	22	22	22	22	23	22	22	22
A 2	39	44	46	52	61	71	76	86	101
A 3	98	104	117	123	136	146	154	179	199
B	80	105	130	160	200	230	300	350	450
C	40	52,5	65	80	100	115	150	175	225
D	117	138	175	235	275	330	410	490	680
E	95	110	140	190	220	270	330	390	550
F	80	105	130	160	200	230	300	350	460
G	62	80	100	120	150	175	230	260	330
Ø H	9	9	13	17	21	28	39	46	66
Ø J k6	14	14	16	24	32	38	42	50	70
K 1	32	36	50	63	80	100	125	140	196
K 2	31	40	50	70	75	87,5	110	130	185
L	42	54	67,5	92,5	102,5	117,5	150	180	250
L1	25,5	18	28	36	58	58	82	82	105
M	83	108	133	163	204	235	305	355	470
O	140	140	192	238	322	356	474	524	682
☐ P	30	40	70	80	90	100	140	180	220
Q	5x5x20	5x5x16	5x5x25	8x7x32	10x8x50	10x8x50	12x8x70	14x9x70	20x12x100
R	3	2	2	2	2	2	5	5	5
S1	43	45	50	60	70	75	100	120	140
S2	58	61	68	80	95	105	135	160	190
S3	66	69	76	89	109	124	154	184	219
Ø T f7	62	72	92	122	152	182	222	262	352
Ø T5	50	-	100	115	130	-	200	260	310
Ø U	29	40	66	82	78	88,5	136	143	198
Ø V	35	35	60	70	100	125	140	195	240
V1	5x M5	M 5	M 6	M 6	M 8	M 10	M 12	M 14	M 20
Ø V2	Ø42	Ø46	Ø50	Ø70	Ø85	Ø110	Ø120	Ø150	Ø200
Ø W	45	50	80	100	120	125	140	220	290
Z1	15	16	18	20	25	30	35	40	50
Z2	23	24	26	29	39	49	54	64	79
Z3	29	34	39	44	54	64	74	84	109
Z4	10	12	15	20	25	28	35	45	60
Z5	27	-	28	33	40	-	54	63	73
Head I									
Ø a k6	18 h9	15	20	30	40	50	80	95	130
b	20	24	29	39	49	54	79	99	119
c	37	44	49	59	69	74	99	119	139
Head II									
Ø d	65	72	92	122	150	182	222	262	352
Ø e	45	50	65	85	105	135	170	205	270
Ø f	4xØ7	4xØ9	4xØ14	4xØ17	4xØ22	6xØ26	8xØ30	8xØ33	8xØ45
g	43	45	50	60	70	75	100	120	140
r	8	10	12	18	20	25	30	35	50
s	20	25	30	40	50	55	80	100	120
Ø x	18	30	35	50	65	85	115	140	185
Head III									
h	15	24	29	39	49	54	79	99	119
i	M 18x1,5	M 16x1,5	M 20x1,5	M 30x2	M 42x3	M 56x3	M 80x3	M 100x4	M 140x4
k	37	44	49	59	69	74	99	119	139
Head IV									
l - 0,2	20	25	30	40	60	75	100	120	160
m	50	60	70	100	130	150	230	300	360
n	30	40	50	70	100	120	160	200	280
Ø o H8	15	20	25	35	50	60	80	100	140
p	55	60	65	85	100	110	170	220	240
Ø u	30	40	50	65	90	110	140	170	220
v	15	20	25	35	50	60	80	100	140
v1	35	40	45	65	80	90	150	200	220

*Size 32 replaces previous size 31.

HSE range
Technical drawings and dimensions

With added-on limit switches Sm/Si

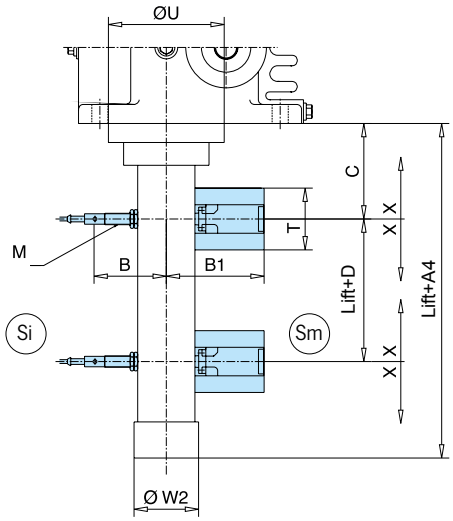

Size	A4	B	B1	C	D	T	M	ØU	ØW2	X
32	on request									
36.1	140	86	*	70	12	*	12x1	72	42	±10
50.1	174	97	110	77	20	58	12x1	92	66	±10
63.1	180	106	110	88	25	58	12x1	122	82	±10
80.1	220	114	120	100	30	58	12x1	152	96	±10
100.1	on request									
125.1										
140										
200.1										

All sizes are prepared for mechanical (Sm) and inductive (Si) operating limit switches. Limit switches are not included in the scope of delivery.

Ind. proximity switch Si	Mechanical limit switch Sm
Technical data see chapter „Accessories“!	

*on request

Anti-turn device Vm/Vi with added-on limit switches

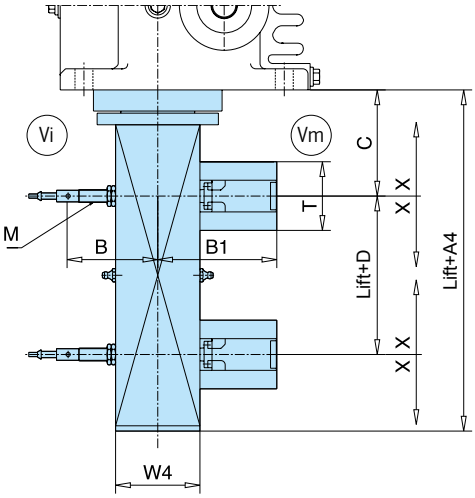

Size	A4	B	B1	C	D	T	M	W4	X
32	on request								
36.1	133	87	115	63	20	58	12x1	40x90x2	±10
50.1	137	102	115	68	20	58	12x1	70x70	±10
63.1	150	107	115	75	25	58	12x1	80x80	±10
80.1	170	112	117	85	30	58	12x1	90x90	±10
100.1	180	117	130	95	35	58	12x1	100x100x5	±10
125.1	on request								
140									
200.1									

All sizes are prepared for mechanical (Vm) and inductive (Vi) operating limit switches. Limit switches are not included in the scope of delivery.

Ind. proximity switch Vi	Mechanical limit switch Vm
Technical data see chapter „Accessories“!	

HSE range
Technical drawings and dimensions

With short safety nut SFM-O

The short safety nut significantly increases the operational safety of the drive elements by absorbing the axial load in the event of a main nut fracture. At the same time, the safety nut can be used to check the wear of the main nut exactly, since the distance between the two nuts changes with increasing wear. In the case of worm gear screw jacks with safety nuts the main load direction (tensile or compression load) and the installation position must always be taken into account, as only a consistently arranged safety nut can take up the load.

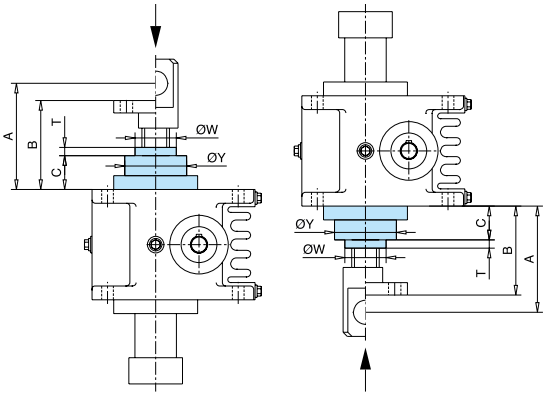

HSE type 1, compression load

Size	A	B	C	T*	ØY	ØW
32	80	63	24	1	50	30
36.1	85	70	24	1	55	35
50.1	100	85	43,5	1,5	85	60
63.1	125	100	48,5	1,5	105	70
80.1	160	130	57	3	125	90
100.1	170	135	57	3	155	110
125.1	250	180	76	4	190	140
140	on request					
200.1	335	235	90	5	300	240

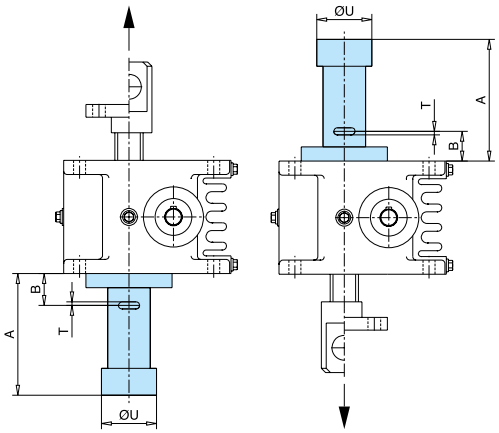

HSE type 1, tensile load

Size	A	B	T*	ØU
32	Hub + 67	25	1	47
36.1	Hub + 67	25	1	56
50.1	Hub + 77	35	1,5	80
63.1	Hub + 82	40	1,5	92
80.1	Hub + 102	60	3	107
100.1	Hub + 102	60	3	132
125.1	Hub + 122	80	4	158
140	on request			
200.1	Hub + 137	95	5	272

*Corresponds to new condition; if „T = 0“, supporting and safety nut must be repaired.

HSE range
Technical drawings and dimensions

With long safety nut SFM-E/SFM-D (DGUV V17/18 and DGUV R100-500, chap. 2.10)

When using worm gear screw jacks in theater stages (DGUV V17/18), lifting platforms (DGUV R100-500, chap. 2.10) or lifting systems where there is a risk of injury to persons, the screw jacks are designed in accordance with the current regulations. Additional components ensure, among other things, fall protection (self-locking spindles and/or mechanical safety brakes in the drive) and, if required, the synchronous direction of rotation.

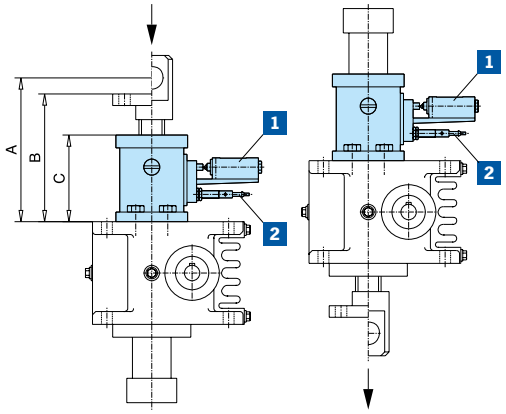

HSE type 1, compression and tensile load

Size	A	B	C
32	on request		
36.1			
50.1			
63.1	220	195	135
80.1	270	240	170
100.1	330	295	220
125.1	360	290	190
140	on request		
200.1			

Mechanical limit switch 1	Ind. proximity switch 2

Technical data and dimensions see chapter „Accessories“!

Use of worm gear screw jacks, e.g. in theater stages

Image source: Stadthalle Gersthofen/Baveria

Image source: Pushkinsky Theater, Moscow

HSE range
Technical drawings and dimensions

Swiveling configuration P/Q

In order to be able to perform swiveling and tilting movements with worm gear screw jacks, the drive elements must be movably attached at two points. This can be done by using a head IV (see page 117, Accessories swivel plates) or rod end at both ends.

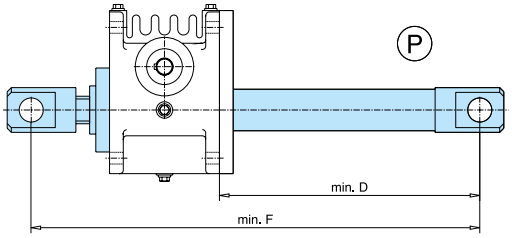

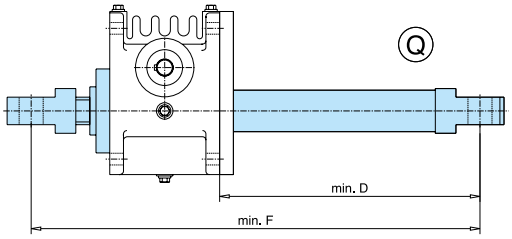

Size	D	F
32	on request	
36.1	Lift + 114	Lift + 303
50.1	Lift + 140	Lift + 361
63.1	Lift + 180	Lift + 454
80.1	Lift + 195	Lift + 534
100.1	on request	
125.1		
140		
200.1		

Swiveling configuration with added-on limit switches Pm/Pi, Qm/Qi

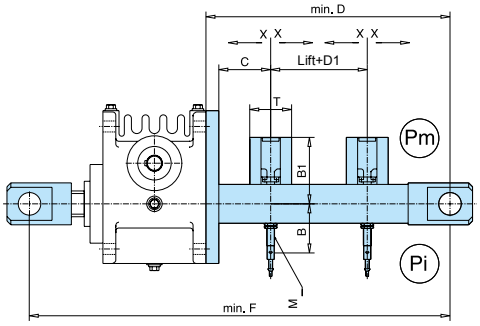

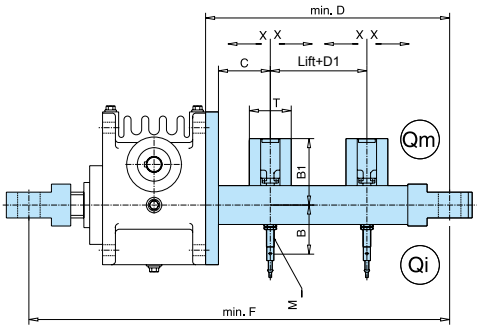

Size	B	B1	C	D	D1	F	M	T	X
32	on request								
36.1	86	93	50	Lift + 155	12	Lift + 344	12x1	58	± 10
50.1	97	105	50	Lift + 175	20	Lift + 396	12x1	58	± 10
63.1	106	110	50	Lift + 205	25	Lift + 479	12x1	58	± 10
80.1	114	120	50	Lift + 250	40	Lift + 589	12x1	58	± 10
100.1	on request								
125.1									
140									
200.1									

All sizes are prepared for mechanical (Pm/Qm) and inductive (Pi/Qi) operating limit switches. Limit switches are not included in the scope of delivery.

Ind. proximity switch Pi/Qi	Mechanical limit switch Pm/Qm
Technical data and dimensions see chapter „Accessories“!	

HSE range
Technical drawings: Type 2

A

B

C

D

Technical drawings HSE: Type 2, standard

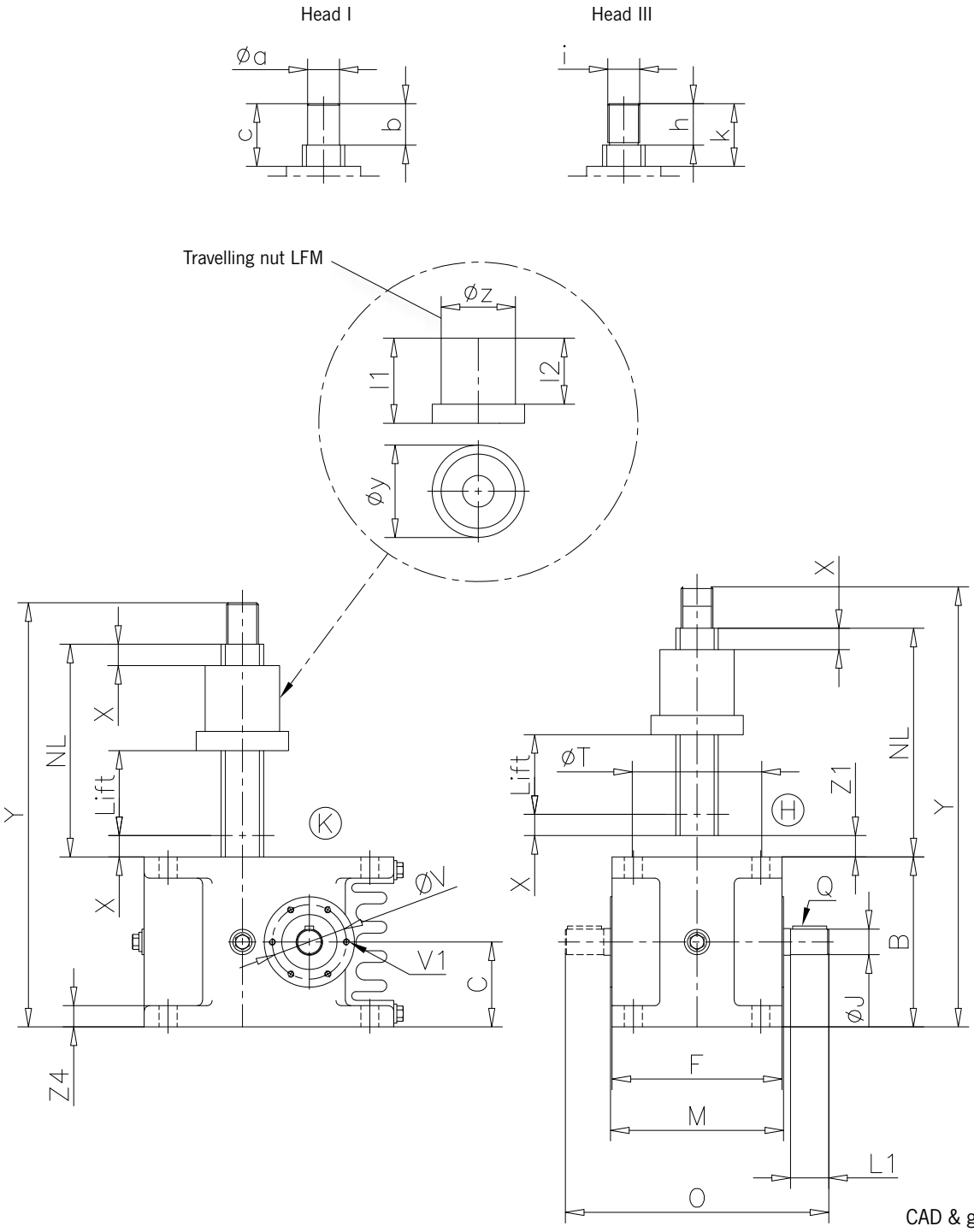

K = Short cover

H = High cover

CAD & go

HSE range
Dimensions: Type 2

Dimensions HSE: Type 2, standard									
Size	32*	36.1	50.1	63.1	80.1	100.1	125.1	140	200.1
Screw	Tr 18x6	Tr 24x5	Tr 40x8	Tr 50x9	Tr 60x12	Tr 70x12	Tr 100x16		Tr 160x20
B	80	105	130	160	200	230	300		450
C	40	52,5	65	80	100	115	150		225
F	80	105	130	160	200	230	300		460
Ø J k6	14	14	16	24	32	38	42		70
L	42	54	67,5	92,5	102,5	117,5	150		250
L1	15	18	28	36	58	58	82		105
M	83	108	133	163	204	235	305		470
NL Design „K“	Lift + 85	Lift + 95	Lift + 120	Lift + 140	Lift + 170	Lift + 170	Lift + 200		Lift + 260
NL Design „H“	Lift + 100	Lift + 111	Lift + 138	Lift + 160	Lift + 195	Lift + 200	Lift + 235		Lift + 310
O	140	140	192	238	322	356	474		682
Q	5x5x20	5x5x16	5x5x25	8x7x32	10x8x50	10x8x50	12x8x70		20x12x100
Ø T	62	72	92	122	152	182	222		352
Ø V	Ø42	Ø46	Ø50	Ø70	Ø85	Ø110	Ø120		Ø200
V1	5x M5	M 5	M 6	M 6	M 8	M 10	M 12		M 20
Safety X	20	20	20	20	20	20	20	on request	20
Y	NL + 97	NL + 129	NL + 169	NL + 199	NL + 249	NL + 284	NL + 379		NL + 569
Z1	15	16	18	20	25	30	35		50
Z4	10	12	15	20	25	28	35		60
Travelling nut LFM									
l1	45	55	80	100	130	130	160		220
l2	35	43	62	78	105	100	115		140
Ø y	50	65	87	105	110	120	190		260
Ø z h9	40	45	70	80	90	90	150		200
Head I									
Ø a k6	10	15	30	40	40	50	80		130
b	20	24	39	49	49	54	79		119
c	37	44	59	69	69	74	99		139
Head III									
h	20	24	39	49	49	54	79		119
i	M 10	M 16x1,5	M 30x2	M 42x3	M 42x3	M 56x3	M 80x3		M 140x4
k	37	44	59	69	69	74	99		139

*Size 32 replaces previous size 31.

HSE range
Technical drawings and dimensions

A

With short safety nut LFM-K

The short safety nut significantly increases the operational safety of the drive elements by absorbing the axial load in the event of a main nut fracture. At the same time, the safety nut can be used to check the wear of the main nut exactly, since the distance between the two nuts changes with increasing wear. In the case of worm gear screw jacks with safety nuts the main load direction (tensile or compression load) and the installation position must always be taken into account, as only a consistently arranged safety nut can take up the load.

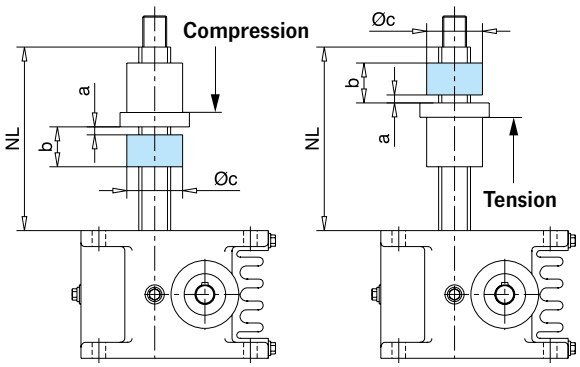

HSE type 2, compression and tensile load

Size	a*	b	Øc	NL	
				Design K	Design H
32	5	25	40	Lift + 110	Lift + 125
36.1	10	35	45	Lift + 130	Lift + 146
50.1	10	50	70	Lift + 170	Lift + 188
63.1	10	60	80	Lift + 200	Lift + 220
80.1	10	60	90	Lift + 240	Lift + 265
100.1	10	70	90	Lift + 240	Lift + 270
125.1	15	95	150	Lift + 295	Lift + 330
140	on request				
200.1	15	115	200	Lift + 375	Lift + 425

*Corresponds to new condition

With long safety nut LFM-E (DGUV V17/18 and DGUV R100-500, chap. 2.10)

When using worm gear screw jacks in theater stages (DGUV V17/18), lifting platforms (DGUV R100-500, chap. 2.10) or lifting systems where there is a risk of injury to persons, the screw jacks are designed in accordance with the current regulations. Additional components ensure, among other things, fall protection (self-locking spindles and/or mechanical safety brakes in the drive) and, if required, the synchronous direction of rotation.

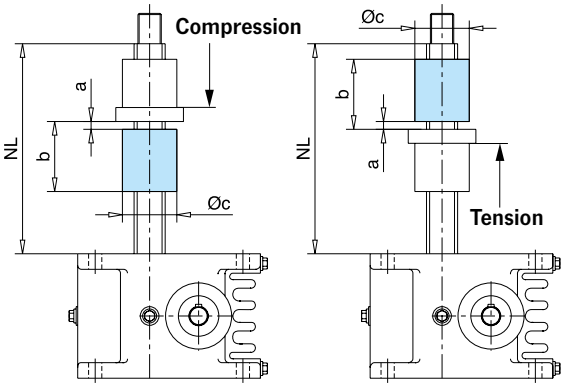

HSE type 2, compression and tensile load

Size	a*	b	Øc	NL	
				Design K	Design H
32	5	50	40	Lift + 135	Lift + 150
36.1	10	65	45	Lift + 160	Lift + 176
50.1	10	90	70	Lift + 210	Lift + 228
63.1	10	110	80	Lift + 250	Lift + 270
80.1	10	140	90	Lift + 310	Lift + 335
100.1	10	140	90	Lift + 310	Lift + 340
125.1	15	175	150	Lift + 375	Lift + 410
140	on request				
200.1	15	235	200	Lift + 495	Lift + 545

*Corresponds to new condition

All sizes are prepared for mechanical operating limit switches. Limit switches are not included in the scope of delivery.

Mechanical limit switch
Technical data and dimensions see chapter „Accessories“!

B

C

D

Screw jacks
Application

Reference example

Columbus McKinnon is fitting the ferry terminal in Kuryk on the shores of the Caspian Sea with screw jacks of the brand Pfaff-silberblau. With this expansion, the ferry port is to establish itself as a hub for the transhipment-free transport of goods to Europe.

The two huge loading bridges each contain 24 Pfaff-silberblau SHE 150.1 special screw jacks and 48 special geared motors, thus creating the technical basis for complete freight trains to be able to enter and leave the ferries quickly.

The bridge with a dead load of 400 tons is raised with a total of 12 worm gear screw jacks SHE150.1. Altogether, some 180 kW actuating power is required for this. With an actuating power of 15 kW and a maximum lifting capacity of 1500 kN, each individual SHE from Pfaff-silberblau can lift and lower around 40 tons dynamically with lifting speeds of up to 5 mm/s. When the bridge is loaded (including the weight of a freight train), the load comes to around 900 tons. In this case, the screw jacks must be capable of supporting a maximum load of up to 150 tons, whilst the technical design also takes account of an uneven weight distribution of up 40 %.

A slave-master system with absolute encoders ensures the precisely synchronized running of the screws with a maximal stroke of up to 3500 mm. The operator‘s safety requirements stipulated a high degree of availability, which is only possible by using a redundant concept. Consequently, the gear motors and stroke limitations are in-stalled redundantly. In the event of a drive failing, the redundant motor can raise and lower the bridge fully on its own.

As regards safety, besides a self-locking special screw, redundant drives and stroke limitations, the screw jacks protected according to IP 66 are also characterized by additional d.c.-operated magneto-electric disc brakes on the motors. A safety nut integrated with a positive fit in the worm gear screw jack serves as a visual wear monitor. In the event of an emergency, this nut system would be capable of supporting the entire load. A flexible protection boot from a material suitable for outdoor use and a special lubricating grease protect the screws of the SHE against the extremely harsh conditions at the Caspian Sea. Standstill heating ensures reliable operation in sub-zero temperatures as low as –20 °C.

HSE range
Mounting positions, shaft/attachment side

A

B

C

D

HSE range: Design A

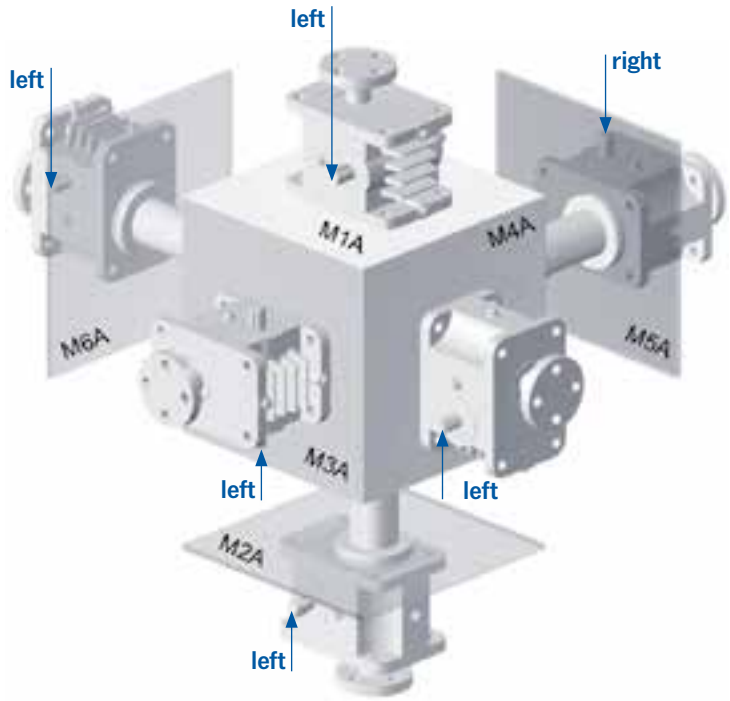

HSE range: Design B

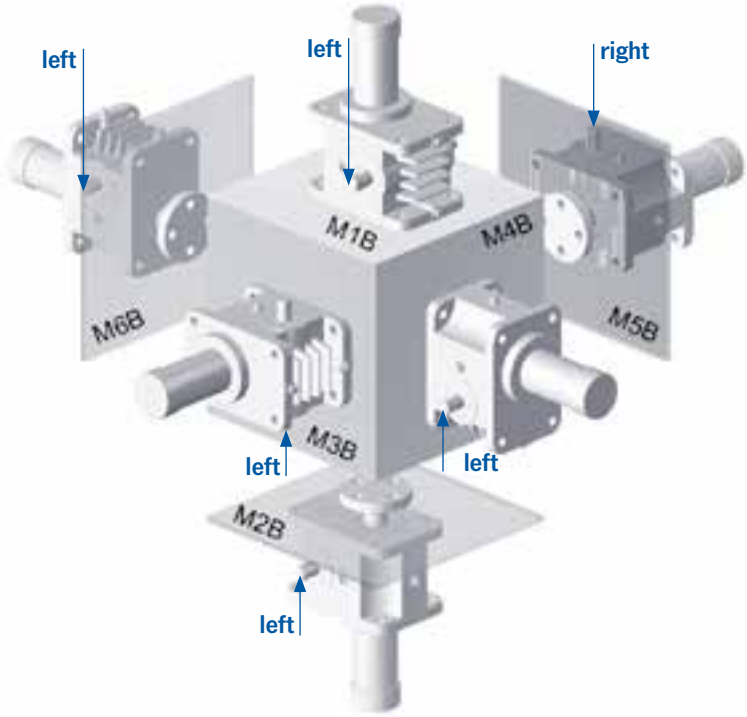

HSE range
Ordering details

H S E - ☐☐☐ ☐ - ☐ - ☐☐☐☐☐ x ☐☐ - ☐ - ☐ - ☐☐☐ - ☐☐☐ - ☐☐☐ - ☐ - ☐☐☐ - ☐☐☐☐ - ☐☐☐☐ - ...

1 2 3 4 5 6 7 8 9 10 11 12 13 14

No.	Description	
1	**Range**	**HSE**
2	**Size**	**32* / 36.1 / 50.1 / 63.1 / 80.1 / 100.1 / 125.1 / 200.1**
3	**Configuration type**	**1** **2**
4	**Screw**	**Tr** (DxP) = Trapezoidal screw **Ku** (DxP) = Ball screw
5	**Ratio**	**N** **L**
6	**Design**	**A** **B**
7	**Mounting position**	**M1A / M1B / M2A / M2B / M3A / M3B** **M4A / M4B / M5A / M5B / M6A / M6B**
8	**Screw side variant**	**K / H / F** (Type 1) **K / H** (Type 2)
9	**Protective tube side variant**	**K / H / S / Sf / Sm / Si / V / Vm / Vi** (Type 1) **K / H** (Type 2)
10	**Drive shaft**	**b** (both sides) **r** (right) **l** (left)
11	**Head**	**I / II / III / IV** (Type 1) **I / III** (Type 2)
12	**Lift**	**Lift in mm**
13	**Extension VL** **Usable length NL**	**VL in mm** (Type 1) **NL in mm** (Type 2)
14	**Options/Accessories**	According to specification, description or technical drawing (see chapter Accessories/Options)

*Size 32 replaces previous size 31.

Screw jacks
SHG quick-lifting screw jacks

A

B

C

D

Features and processing

Dynamic and durable: these are the characteristics our customers appreciate in the SHG quick lifting screw jack. Available in four sizes, it covers a load range from 1.5 t to 9 t. The high efficiency and long service life are achieved by using a spiral bevel gearbox.

The gearboxes of the SHG ranges are ideal where high dynamics and long duty cycles are required.

4 different sizes

Lifting capacities from 15 to 90 kN

Input speeds up to 3000 min^{-1}

- Self-locking trapezoidal screw
- Separate lubrication circuits: Tr screw grease-lubrication and bevel gear boxes with lubrication
- Bevel gear boxes in two ratio steps (2:1 and 3:1 as required)
- Gearing is case-hardened and ground
- Spiral bevel gear boxes for high lifting speeds, high efficiency ratings and long service life

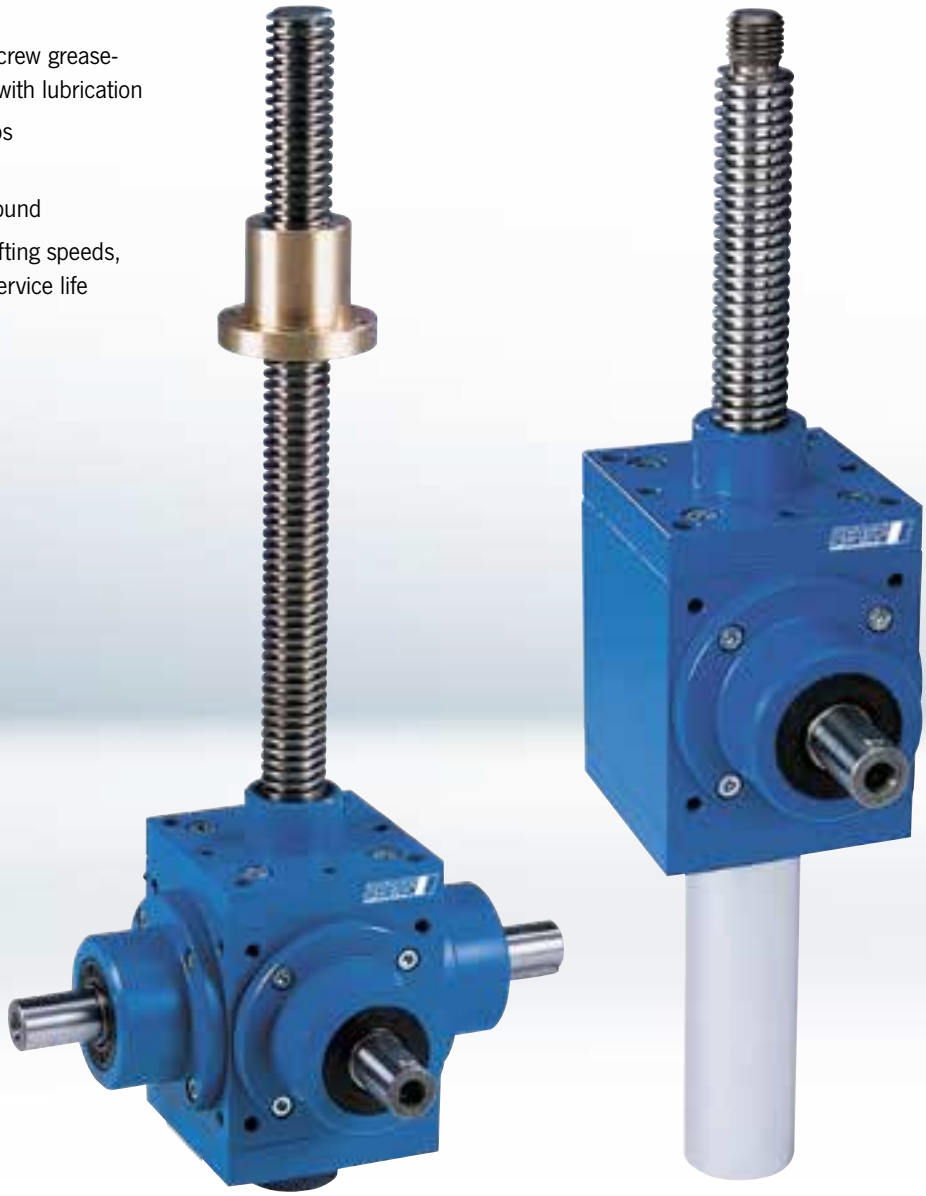

SHG range
Selection table

Selection table quick-lifting screw jack SHG					
Size		G15	G25	G50	G90
Max. lifting capacity dynamic/static	[kN]	15	25	50	90
Max. tensile load dynamic/static	[kN]	15	25	50	90
Screw Tr[1]		24x5	35x8	40x7	60x9
Ratio N		2:1			
Lift per revolution for ratio N	[mm/per rev.]	2,5	4	3,5	4,5
Ratio L		3:1			
Lift per revolution for ratio L	[mm/per rev.]	1,66	2,67	2,33	3
Max. drive capacity[2] at T = 20 °C Duty cycle (ED) 20 %/h	[kW]	1	1,5	2,4	8,9
Max. drive capacity[2] at T = 20 °C Duty cycle (ED) 10 %/h	[kW]	1,3	2,6	3,8	13
Screw efficiency rating	[%]	41	43	37	33
Torque, capacity, turning-speed at 20 % ED/h and 20 °C		see performance tables page 82–83			
Screw torque at max. lifting power	[Nm]	29,4	73,2	123,4	398,5
Max. permitted drive-shaft torque	[Nm]	50	125	175	1600
Mass moment of inertia J[3] Ratio N type 1	[kg cm²]	1,058	6,63	22,44	181,28
Mass moment of inertia J[3] Ratio N type 2	[kg cm²]	1,079	6,79	22,89	184,92
Mass moment of inertia J[3] Ratio L type 1	[kg cm²]	0,677	3,6	7,248	123,79
Mass moment of inertia J[3] Ratio L type 2	[kg cm²]	0,691	3,67	7,393	126,28
Max. permitted screw length for compression load	[mm]	see buckling diagrams page 152–153			
Housing material		EN-GJL-250	G-AlSi10Mg	EN-GJL-250	
Weight without stroke length and protection tube	[kg]	9	13,5	23	85
Screw weight per 100 mm stroke	[kg]	0,8	0,59	1,5	2,5
Amount of lubricant in worm gear	[kg]	0,15	0,9	0,6	3,5

Dimension plans type 1: page 84–87, type 2: page 88–91

1) Also applies to Ku screw (see page 157)
2) Max. permitted values for type 1 and Tr screw. Higher values are possible when using type 2 or Ku screw.
3) Referring to 100 mm screw length

Possible usage according to directive 2014/34/EU (ATEX)

SHG range
Performance tables (screw jacks with Tr)

A

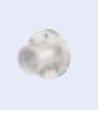

SHG range (Quick-lifting screw jacks) with trapezoidal threaded screw

Rotary speed, power requirement and permitted lifting speed for ratio 2:1 and 3:1 with single-start **lifting (type 1) trapezoidal screw**. All performance data is expressed in terms of dynamic lifting capacity.

With duty ratio of < 10 %/h or configuration with rotating screw (type 2), the maximum permitted drive capacities can be increased. In this case, please consult our screw jack specialists.

Performance table SHG G 15 screw Tr 24x5

Speed	Lifting speed		F = 15 kN				F = 12,5 kN				F = 10 kN				F = 7,5 kN				F = 5 kN				F = 2,5 kN				F = 1 kN			
n	2:1	3:1	2:1		3:1		2:1		3:1		2:1		3:1		2:1		3:1		2:1		3:1		2:1		3:1		2:1		3:1	
[1/min]	[m/min]		Nm	kW	Nm	kW	Nm	kW	Nm	kW	Nm	kW	Nm	kW	Nm	kW	Nm	kW	Nm	kW	Nm	kW	Nm	kW	Nm	kW	Nm	kW	Nm	kW
3000	7,5	5	16	4,6	12	3,2	14	3,9	10	2,8	11	3,2	8	2,3	8,9	2,6	6,4	1,9	6,5	1,9	5	1,4	4,1	1,2	3,2	1	2,7	0,8	2,3	0,7
2250	5,6	3,75	16	3,5	12	2,4	14	3	10	2,1	11	2,4	8	1,8	8,9	1,9	6,4	1,4	6,5	1,4	5	1,1	4,1	0,9	3,2	0,7	2,7	0,6	2,3	0,5
1500	3,75	2,5	16	2,3	12	1,6	14	2	10	1,4	11	1,6	8	1,2	8,9	1,3	6,4	1	6,5	1	5	0,7	4,1	0,6	3,2	0,5	2,7	0,4	2,3	0,4
1000	2,5	1,67	16	1,6	12	1,1	14	1,3	10	1	11	1,1	8	0,8	8,9	0,9	6,4	0,7	6,5	0,7	5	0,5	4,1	0,4	3,2	0,4	2,7	0,3	2,3	0,3
750	1,88	1,25	16	1,2	12	0,8	14	1	10	0,7	11	0,8	8	0,6	8,9	0,7	6,4	0,5	6,5	0,5	5	0,4	4,1	0,3	3,2	0,3	2,7	0,2	2,3	0,2
500	1,25	0,83	16	0,8	12	0,6	14	0,7	10	0,5	11	0,6	8	0,4	8,9	0,5	6,4	0,3	6,5	0,4	5	0,3	4,1	0,2	3,2	0,2	2,7	0,2	2,3	0,1
250	0,63	0,42	16	0,4	12	0,3	14	0,4	10	0,3	11	0,3	8	0,2	8,9	0,3	6,4	0,2	6,5	0,2	5	0,2	4,1	0,1	3,2	0,1	2,7	0,1	2,3	0,1

Performance table SHG G 25 screw Tr 35x8

Speed	Lifting speed		F = 25 kN				F = 20 kN				F = 15 kN				F = 10 kN				F = 5 kN				F = 2,5 kN				F = 1 kN			
n	2:1	3:1	2:1		3:1		2:1		3:1		2:1		3:1		2:1		3:1		2:1		3:1		2:1		3:1		2:1		3:1	
[1/min]	[m/min]		Nm	kW	Nm	kW	Nm	kW	Nm	kW	Nm	kW	Nm	kW	Nm	kW	Nm	kW	Nm	kW	Nm	kW	Nm	kW	Nm	kW	Nm	kW	Nm	kW
3000	12	8	40	13	28	8,6	33	10	23	7	25	7,8	18	5,6	18	5,5	13	3,9	10	3,2	8	2,4	7	2	6	1,6	5	1,3	4	1,1
2250	9	6	40	9,4	28	6,5	33	7,7	23	5,4	25	5,9	18	4,2	18	4,2	13	3	10	2,4	8	1,9	7	1,6	6	1,3	5	1	4	0,9
1500	6	4	40	6,3	28	4,4	33	5,2	23	3,6	25	4	18	2,8	18	2,8	13	2,1	10	1,7	8	1,3	7	1,1	6	0,9	5	0,7	4	0,7
1000	4	2,6	40	4,2	28	2,9	33	3,5	23	2,4	25	2,7	18	1,9	18	1,9	13	1,4	10	1,1	8	0,9	7	0,7	6	0,6	5	0,5	4	0,5
750	3	2	40	3	28	2,1	33	2,5	23	1,7	25	1,9	18	1,3	18	1,3	13	0,9	10	0,7	8	0,5	7	0,4	6	0,3	5	0,3	4	0,2
500	2	1,3	40	2	28	1,4	33	1,6	23	1,1	25	1,3	18	0,9	18	0,9	13	0,6	10	0,5	8	0,4	7	0,3	6	0,2	5	0,2	4	0,2
250	1	0,6	40	1,1	28	0,7	33	0,9	23	0,6	25	0,7	18	0,5	18	0,5	13	0,4	10	0,3	8	0,2	7	0,2	6	0,2	5	0,1	4	0,1

Performance table SHG G 50 screw Tr 40x7

Speed	Lifting speed		F = 50 kN				F = 30 kN				F = 20 kN				F = 15 kN				F = 10 kN				F = 5 kN				F = 2,5 kN			
n	2:1	3:1	2:1		3:1		2:1		3:1		2:1		3:1		2:1		3:1		2:1		3:1		2:1		3:1		2:1		3:1	
[1/min]	[m/min]		Nm	kW	Nm	kW	Nm	kW	Nm	kW	Nm	kW	Nm	kW	Nm	kW	Nm	kW	Nm	kW	Nm	kW	Nm	kW	Nm	kW	Nm	kW	Nm	kW
3000	10,5	7	80	22	54	15	48	14	33	9,3	33	9,3	23	6,4	26	7,1	18	5	18	5	13	3,5	11	2,8	8	2,1	7	1,8	5,2	1,4
2250	7,9	5,25	80	16	54	11	48	10	33	7	33	7	23	4,8	26	5,4	18	3,7	18	3,7	13	2,7	11	2,1	8	1,6	7	1,3	5,2	1,1
1500	5,2	3,5	80	11	54	7,5	48	6,8	33	4,7	33	4,7	23	3,2	26	3,6	18	2,5	18	2,5	13	1,8	11	1,4	8	1,1	7	0,9	5,2	0,7
1000	3,5	2,3	80	7,5	54	5	48	4,6	33	3,1	33	3,1	23	2,2	26	2,4	18	1,7	18	1,7	13	1,2	11	1	8	0,7	7	0,6	5,2	0,5
750	2,6	1,75	80	5	54	3,8	48	3,4	33	2,3	33	2,4	23	1,6	26	1,8	18	1,3	18	1,3	13	0,9	11	0,7	8	0,6	7	0,5	5,2	0,4
500	1,75	1,17	80	3,8	54	2,5	48	2,3	33	1,6	33	1,6	23	1,1	26	1,2	18	0,9	18	0,9	13	0,6	11	0,5	8	0,4	7	0,3	5,2	0,3
250	0,87	0,58	80	1,9	54	1,4	48	1,2	33	0,8	33	0,8	23	0,6	26	0,6	18	0,5	18	0,5	13	0,3	11	0,3	8	0,2	7	0,2	5,2	0,2

B

Performance table SHG G 90 screw Tr 60x9

Speed	Lifting speed		F = 90 kN				F = 75 kN				F = 50 kN				F = 25 kN				F = 10 kN				F = 5 kN				F = 2,5 kN			
n	2:1	3:1	2:1		3:1		2:1		3:1		2:1		3:1		2:1		3:1		2:1		3:1		2:1		3:1		2:1		3:1	
[1/min]	[m/min]		Nm	kW	Nm	kW	Nm	kW	Nm	kW	Nm	kW	Nm	kW	Nm	kW	Nm	kW	Nm	kW	Nm	kW	Nm	kW	Nm	kW	Nm	kW	Nm	kW
3000	13,5	9	207	58	140	39	174	49	118	33	119	33	81	22	63	17	44	12	30	7,6	22	5,5	19	4,5	14	3,4	14	2,9	10	2,4
2250	10,1	6,75	207	44	140	29	174	37	118	25	119	25	81	17	63	13	44	8,9	30	5,7	22	4,1	19	3,4	14	2,6	14	2,2	10	1,8
1500	6,75	4,5	207	29	140	20	174	24	118	16	119	16	81	11	63	8,5	44	5,9	30	3,8	22	2,8	19	2,3	14	1,7	14	1,5	10	1,2
1000	4,5	3	207	19	140	13	174	16	118	11	119	11	81	7,5	63	5,7	44	4	30	2,6	22	1,9	19	1,5	14	1,2	14	1	10	0,8
750	3,37	2,25	207	15	140	10	174	12	118	8,2	119	8,2	81	5,6	63	4,3	44	3	30	1,9	22	1,4	19	1,1	14	0,9	14	0,8	10	0,6
500	2,25	1,5	207	9,7	140	6,6	174	8,1	118	5,5	119	5,5	81	3,8	63	2,9	44	2	30	1,3	22	1	19	0,8	14	0,6	14	0,5	10	0,4
250	1,12	0,75	207	4,9	140	3,3	174	4,1	118	2,8	119	2,8	81	1,9	63	1,5	44	1	30	0,7	22	0,5	19	0,4	14	0,3	14	0,3	10	0,2

C

D

Max. duty ratio at 20 °C ambient temperature: 20 %/h 10 %/h static only (dynamic not permitted)

SHG range
Performance tables (srew jacks with ball screw Ku)

SHG range (Quick-lifting screw jacks) with ball screw Ku

Rotary speed, power requirement and permitted lifting speed for **ratio „N“** with **lifting (type 1) ball screw Ku**. All performance data is expressed in terms of dynamic lifting force with 20 % ED/h.

Ball screws (Ku) with higher load capacity are possible with configuration type 2.

Performance table SHG G 15 N screw Ku 25x5; 20x20

Speed	Lifting speed		F = 15 kN				F = 9,5 kN				F = 7 kN				F = 5 kN				F = 3 kN				F = 2 kN				F = 1 kN			
n	20x20	25x5	20x20		25x5		20x20		25x5		20x20		25x5		20x20		25x5		20x20		25x5		20x20		25x5		20x20		25x5	
[1/min]	[m/min]				Nm	kW			Nm	kW			Nm	kW			Nm	kW			Nm	kW			Nm	kW			Nm	kW
3000	30,0	7,5	32	10,49	11	3,52	23	7,3	10	3,1	18	5,79	9	2,70	15	4,61	8	2,41	11	3,43	7	2,11	9	2,85	6	1,96	7	2,26	5	1,82
2500	25,0	6,3	32	8,80	11	2,99	23	6,1	10	2,6	18	4,88	9	2,31	15	3,90	8	2,06	11	2,92	7	1,82	9	2,43	6	1,70	7	1,94	5	1,57
2000	20,0	5,0	32	7,23	11	2,58	23	5,1	10	2,3	18	4,10	9	2,04	15	3,31	8	1,84	11	2,53	7	1,64	9	2,13	6	1,55	7	1,74	5	1,45
1500	15,0	3,8	32	5,41	11	1,92	23	3,8	10	1,7	18	3,06	9	1,51	15	2,47	8	1,37	11	1,88	7	1,22	9	1,59	6	1,15	7	1,29	5	1,07
1000	10,0	2,5	32	3,64	11	1,32	23	2,6	10	1,2	18	2,07	9	1,04	15	1,68	8	0,95	11	1,29	7	0,85	9	1,09	6	0,80	7	0,90	5	0,75
750	7,5	1,9	32	2,47	11	0,72	23	1,7	10	0,6	18	1,29	9	0,52	15	1,00	8	0,44	11	0,70	7	0,37	9	0,55	6	0,33	7	0,41	5	0,30

Performance table SHG G 25 N screw Ku 25x10; 25x5

Speed	Lifting speed		F = 25 kN				F = 20 kN				F = 15 kN				F = 10 kN				F = 5 kN				F = 2,5 kN				F = 1 kN			
n	25x10	25x5	25x10		25x5		25x10		25x5		25x10		25x5		25x10		25x5		25x10		25x5		25x10		25x5		25x10		25x5	
[1/min]	[m/min]		Nm	kW	Nm	kW	Nm	kW	Nm	kW	Nm	kW	Nm	kW	Nm	kW	Nm	kW	Nm	kW	Nm	kW	Nm	kW	Nm	kW	Nm	kW	Nm	kW
3000	15	7,5	25	7,8	14	4,3	21	6,4	12	3,6	16	5	9,5	2,9	12	3,6	7	2,2	7	2,2	5	1,5	5	1,5	3,8	1,2	3,5	1,1	3,1	1
2500	12,5	6,25	25	6,5	14	3,6	21	5,4	12	3,1	16	4,2	9,5	2,5	12	3,1	7	1,9	7	1,9	5	1,3	5	1,3	3,8	1	3,5	1	3,1	0,9
2000	10	5	25	5,3	14	3	21	4,4	12	2,5	16	3,4	9,5	2	12	2,5	7	1,6	7	1,6	5	1,1	5	1,1	3,8	0,9	3,5	0,8	3,1	0,7
1500	7,5	3,75	25	4	14	2,2	21	3,3	12	1,9	16	2,6	9,5	1,5	12	1,9	7	1,2	7	1,2	5	0,8	5	0,8	3,8	0,7	3,5	0,6	3,1	6
1000	5	2,5	25	2,7	14	1,5	21	2,2	12	1,3	16	1,7	9,5	1	12	1,3	7	0,8	7	0,8	5	0,6	5	0,6	3,8	0,5	3,5	0,4	3,1	0,4
750	3,8	1,87	25	1,9	14	1	21	1,5	12	0,8	16	1,2	9,5	0,6	12	0,8	7	0,5	7	0,5	5	0,3	5	0,3	3,8	0,2	3,5	0,2	3,1	0,2

Performance table SHG G 50 N screw Ku 32x10; 40x5

Speed	Lifting speed		F = 40 kN				F = 25 kN				F = 20 kN				F = 15 kN				F = 10 kN				F = 5 kN				F = 2,5 kN			
n	32x10	40x5	32x10		40x5		32x10		40x5		32x10		40x5		32x10		40x5		32x10		40x5		32x10		40x5		32x10		40x5	
[1/min]	[m/min]		Nm	kW	Nm	kW	Nm	kW	Nm	kW	Nm	kW	Nm	kW	Nm	kW	Nm	kW	Nm	kW	Nm	kW	Nm	kW	Nm	kW	Nm	kW	Nm	kW
3000	15	7,5	48	14	26	7,2	31	8,9	17	4,8	25	7,2	14	3,9	20	5,6	14	3,1	14	3,9	9	2,3	8	2,3	5,6	1,5	5	1,5	4,1	1,1
2500	12,5	6,25	48	12	26	6	31	7,4	17	4	25	6	14	3,3	20	4,7	14	2,6	14	3,3	9	1,9	8	1,9	5,6	1,2	5	1,2	4,1	0,9
2000	10	5	48	9,2	26	4,8	31	5,8	17	3,2	25	4,8	14	2,6	20	3,7	14	2,1	14	2,6	9	1,5	8	1,6	5,6	1	5	1	4,1	0,7
1500	7,5	3,75	48	6,9	26	3,6	31	4,4	17	2,4	25	3,6	14	2	20	2,8	14	1,6	14	2	9	1,2	8	1,2	5,6	0,8	5	0,8	4,1	0,6
1000	5	2,5	48	4,6	26	2,4	31	3	17	1,6	25	2,4	14	1,3	20	1,9	14	1,1	14	1,3	9	0,8	8	0,8	5,6	0,5	5	0,5	4,1	0,4
750	3,8	1,87	48	3,5	26	1,8	31	2,3	17	1,2	25	1,9	14	1	20	1,4	14	0,8	14	1	9	0,6	8	0,6	5,6	0,4	5	0,4	4,1	0,3

Performance table SHG G 90 N screw Ku 63x10

Speed	Lifting speed		F = 90 kN				F = 60 kN				F = 40 kN				F = 20 kN				F = 15 kN				F = 10 kN				F = 5 kN			
n		63x10			63x10				63x10				63x10				63x10				63x10				63x10				63x10	
[1/min]	[m/min]				Nm	kW			Nm	kW			Nm	kW			Nm	kW			Nm	kW			Nm	kW			Nm	kW
3000		15			116	32			80	23			55	16			30	8,3			25	6,7			19	4,8			13	3,1
2500		12,5			116	28			80	19			55	13			30	7			25	5,5			19	4			13	2,6
2000		10			116	22			80	15			55	11			30	5,6			25	4,4			19	3,2			13	2
1500		7,5			116	17			80	12			55	8			30	4,2			25	3,3			19	2,4			13	1,5
1000		5			116	11			80	7,5			55	5,1			30	2,8			25	2,2			19	1,6			13	1
750		3,8			116	8,4			80	5,7			55	4			30	2,1			25	1,7			19	1,2			13	0,8

Service life > 500 hours | Service life 100 to 500 hours | static only (dynamic not permitted)

SHG range
Technical drawings: Type 1 – Size G 25

A

Technical drawings SHG: Type 1 – Size G 25

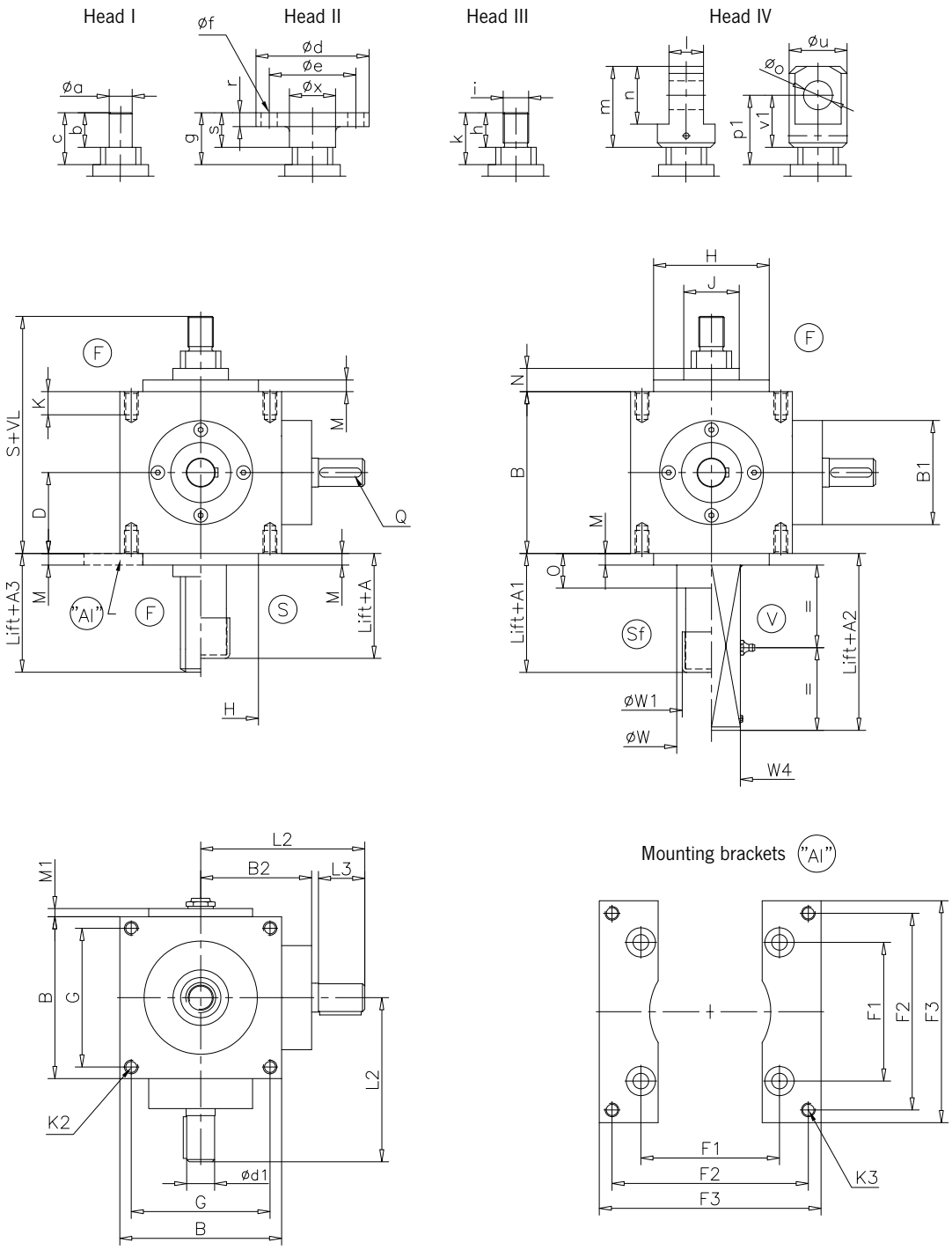

F = Guide ring (standard)
S = Protection tube
Sf = Protection tube with guide ring
V = Anti-turn device
AI = Mounting brackets
VL = Screw extension

Options

- Ball screw
- Stroke shutoff
- Anti-turn device with stroke shutoff
- Long safety nut (DGUV R100-500; chap. 2.10)
- Dimension plans on request

CAD & go

B

C

D

SHG range
Dimensions: Type 1 – Size G 25

Dimensions SHG: Type 1 – Size G 25		
Size	G 25	
Screw	Tr 35x8	Ku 25x05* Ku 25x10*
A	30	
A1	44	
A2	85	
A3	20	
B	140	
Ø B1	90	
B2	96	
D	70	
☐G ±0,1	120	
Ø H h9	100	
Ø J e8	48	
K	20	
K2	M 12x20	
L2	142	
L3	40	
M	10	
M1	7	
N	20	
O	30	
S	205	
Ø W	60	
Ø W1	51	
☐W4	50x50	
Ø d1 k6	24	
Q (DIN 6885)	A 8x7x36	
Head I		
Ø a	20 k6	
b	30	
c	45	
Head II		
Ø d	98	
Ø e	TK 75	
Ø f	4xØ14	
g	45	
r	12	
s	30	
Ø x	40	
Head III		
h	30	
i	M 22x1,5	
k	45	
Head IV		
l -0,2	30	
m	70	
n	50	
Ø O H8	25	
p1	60	
Ø u	50	
v1	45	
Mounting bracket Al		
F1 ±0,2	120	
F2 ±0,2	170	
F3	192	
K3	M12 (Ø 13,5)	

*Dimensions for ball screw (Ku) on request
Special designs on request

SHG range
Technical drawings:
Type 1 – Size G 15 – G 50 – G 90

Technical drawings SHG: Type 1 – Size G 15 – G 50 – G 90

Head II

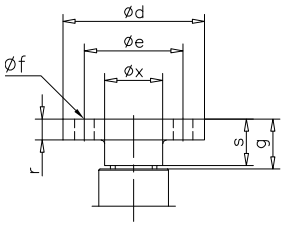

Head IV

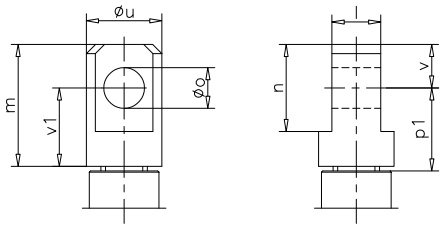

Head GK

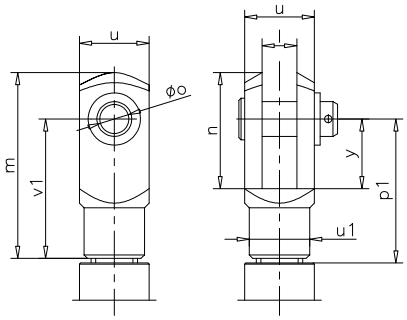

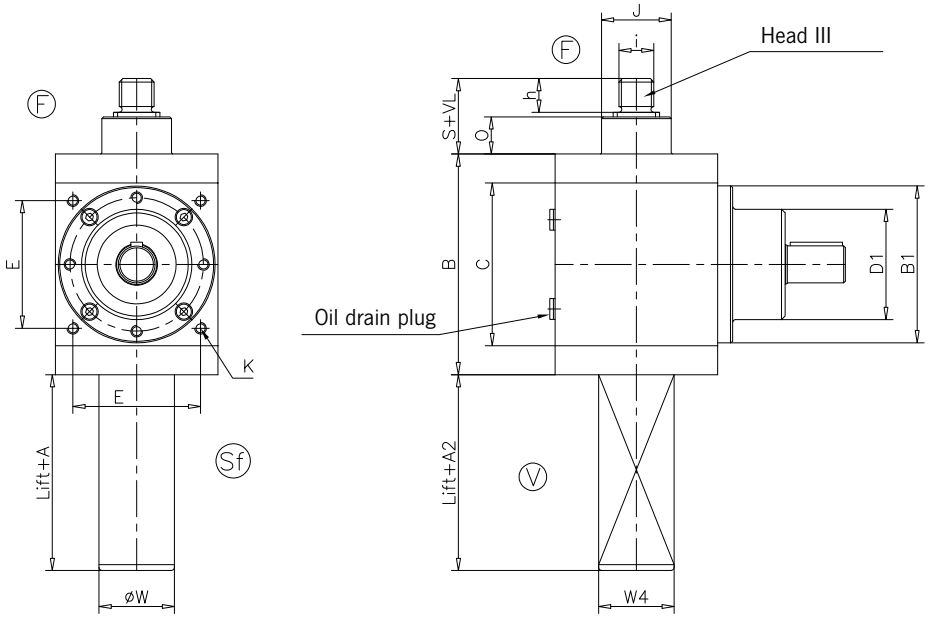

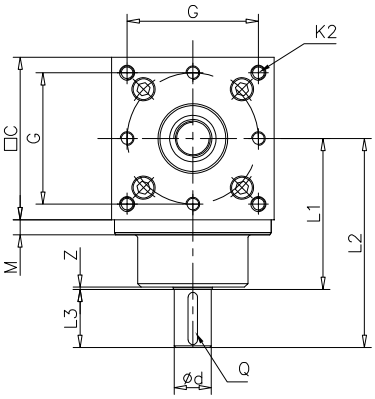

F = Guide ring (standard)
Sf = Protection tube with guide ring
V = Anti-turn device
VL = Screw extension

CAD & go

SHG range
Dimensions:
Type 1 – Size G 15 – G 50 – G 90

Dimensions SHG: Type 1 – Size G 15 – G 50 – G 90						
Size	G 15		G 50		G 90	
Screw	Tr 24x5	Ku 20x05* / Ku 20x20* Ku 25x05* / Ku 25x25*	Tr 40x7	Ku 32x10* / Ku 32x20* Ku 40x05*	Tr 60x9	Ku 63x10* Ku 63x20*
A	35 (70**)		45 (100**)		60 (90**)	
A2	75		100		115	
B	140		190		295	
Ø B1	90		135		225	
☐C	90		140		230	
Ø E	TK 75		110		☐180	
Ø G	TK 72		113		TK 180	
Ø J	38,7		60		90	
K	4x M 8x10 deep		4x M 10x22 deep		4x M 16x18 deep	
K2	4x M 10x16 deep		8x M 12x25 deep	8x M 12x50 deep	4x M 20x20 deep	
M	10		13		17,5	
O	23		32		40	
S	50 (+VL)		65 (+VL)		95 (+VL)	
Ø W	40		65		95	
☐W4	40x40		70x70		90x90	
Ratio 2:1						
Ø d j6	18		32		55	
Q (DIN 6885)	A 6x6x25		A 10x8x45		A 16x10x80	
Ø D1	60		95		150	
L1	87		128		215	
L2	122		180		305	
L3	35		50		90	
Z	2		2		2	
Ratio 3:1						
Ø d j6	12		28		40	
Q (DIN 6885)	A 4x4x25		A 8x7x45		A 12x8x63	
Ø D1	60		95		125	
L1	87		128		230	
L2	122		180		310	
L3	35		50		80	
Z	2		2		3,5	
Head II						
Ø d	90		110		170	
Ø e	TK 67		TK 85		TK 130	
Ø f	4x Ø11		4x Ø13		4x Ø21	
g	28		34		57	
r	10		15		25	
s	23		30		50	
Ø x	46		60		90	
Head III						
h	22		29		48	
i	M 18	M 20	M 30		M 48x2	
Head IV						
l h10	30		35		60	
m	78		105		120	
n	45		65		90	
Ø o H8	24		32		40	
p1	58		74		82	
Ø u	45		60		80	
v1	53		70		75	
v	25		35		45	
Head GK						
l	20 H10		30 H13		50 H13	
m	105		160		265	
n	65		100		169	
Ø o	20 +0,15 / +0,75		30 +0,15 / +0,75		50 +0,15 /+0,75	
p1	85		124		199	
u	40		60		96	
Ø u1	34		52		82	
v1	80		120		192	
y	40		60		96	

* Dimensions for ball screw (Ku) on request
** With turn out lock/design ball screw (Ku) on request
Special designs on request

SHG range
Technical drawings: Type 2 – Size G 25

A

Technical drawings SHG: Type 2 – Size G 25

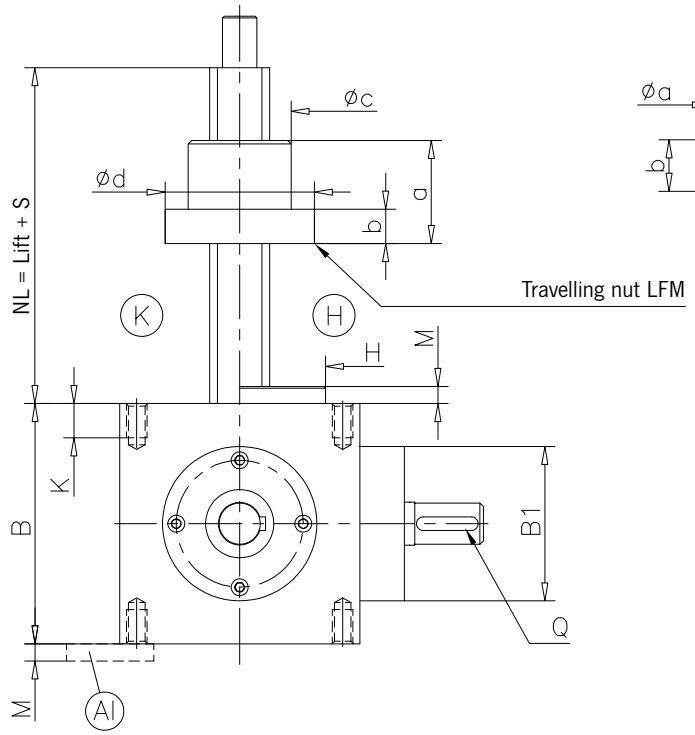

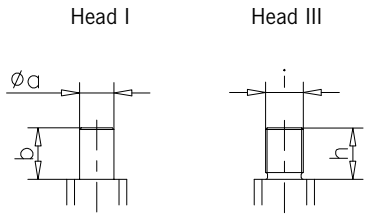

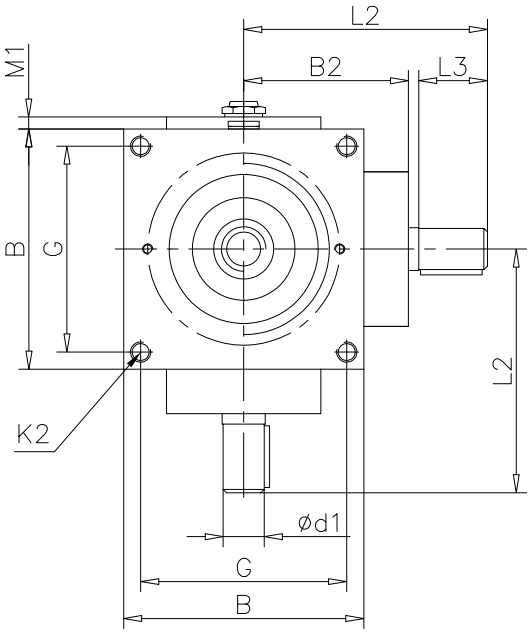

Mounting brackets (Al)

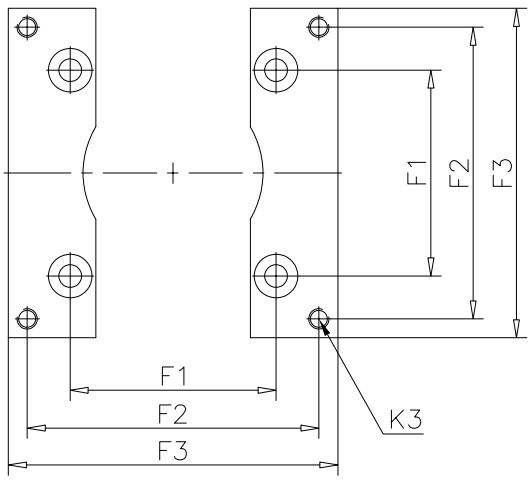

K = Short cover
H = High cover
Al = Mounting brackets

Options
- Ball screw
- Short safety nut
- Long safety nut (DGUV R100-500; chap. 2.10)
- Dimension plans of options on request

CAD & go

SHG range
Dimensions: Type 2 – Size G 25

Dimensions SHG: Type 2 – Size G 25		
Size	G 25	
Screw	Tr 35x8	Ku 32x05* / Ku 32x10* Ku 32x20* / Ku 32x40*
B	140	
Ø B1	90	
B2	96	
□G ±0,1	120	
Ø H h9	100	
K	20	
K2	M 12x20	
L2	142	
L3	40	
M	10	
M1	7	
S	120	
Ø d1 k6	24	
Q (DIN 6885)	A 8x7x36	
Travelling nut LFM		
a	60	
b	20	
Ø c h9	60	
Ø d	87	
Head I		
Ø a k6	20	
b	30	
Head III		
h	30	
i	M 22x1,5	
Mounting bracket AI		
F1 ±0,2	120	
F2 ±0,2	170	
F3	192	
K3	M12 (Ø 13,5)	

* Dimensions for ball screw (Ku) on request
For further nut designs, see page 94–97

SHG G 25 quick-lifting screw jack
in aluminum housing

SHG range
Technical drawings:
Type 2 – Size G 15 – G 50 – G 90

A

B

C

D

Technical drawings SHG: Type 2 – Size G 15 – G 50 – G 90

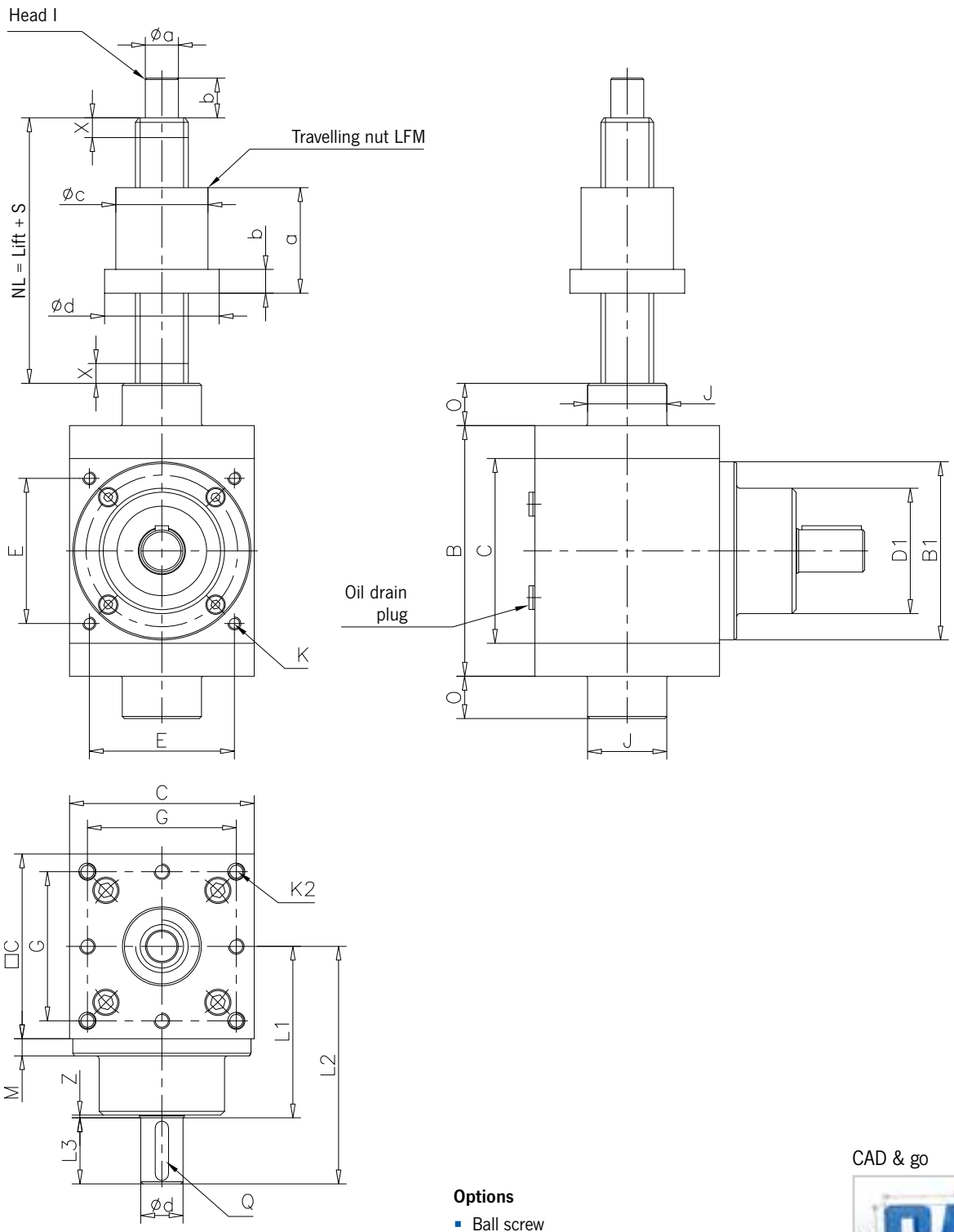

Options

- Ball screw
- Short safety nut
- Long safety nut
- Dimension plans of options on request

CAD & go

SHG range
Dimensions:
Type 2 – Size G 15 – G 50 – G 90

Dimensions SHG: Type 2 – Size G 15 – G 50 – G 90

Size	G 15		G 50		G 90	
Screw	Tr 24x5	Ku 25x05* / Ku 25x10* Ku 25x25* / Ku 32x05* Ku 32x10*/ Ku 32x20* Ku 32x40*	Tr 40x7	Ku 32x05* / Ku 32x10* Ku 32x20* / Ku 32x40* Ku 40x05* / Ku 40x10* Ku 40x20* / Ku 40x40* Ku 50x10* / Ku 50x20* Ku 50x50*	Tr 60x9	Ku 63x10* Ku 63x20*
B	140		190		295	
Ø B1	90		135		225	
□C	90		140		230	
E	TK 75		□110		□180	
G	TK 72		□113		TK 180	
Ø J	38,6		60		90	
K	4x M 8x10 deep		4x M 10x22 deep		M 16x18 deep	
K2	4x M 10x16 deep		8x M 12x25 deep	8x M 12x50 deep	M 20x20 deep	
M	10		13		17,5	
O	23		32		40	
S	95		130		150	
Safety X	20		25		25	
Ratio 2:1						
Ø d j6	18		32		55	
Q (DIN 6885)	A 6x6x25		A 10x8x45		A 16x10x80	
Ø D1	60		95		150	
L1	87		130		215	
L2	122		180		305	
L3	35		50		90	
Z	2		2		2	
Ratio 3:1						
Ø d j6	12		28		40	
Q (DIN 6885)	A 4x4x25		A 8x7x45		A 12x8x63	
Ø D1	60		95		120	
L1	87		130		230	
L2	122		180		310	
L3	35		50		80	
Z	2		2		3,5	
Travelling nut LFM						
a	55		80		100	
b	12		18		30	
Ø c h9	45		70		90	
Ø d	65		87		120	
Head I						
Ø a j6	15	20	25		45	
b	20	25	30		55	

* Dimensions for ball screw (Ku) on request
Special designs on request
For further nut designs, see page 94–97

SHG range
Mounting positions, shaft/attachment side

A

SHG range: Design A

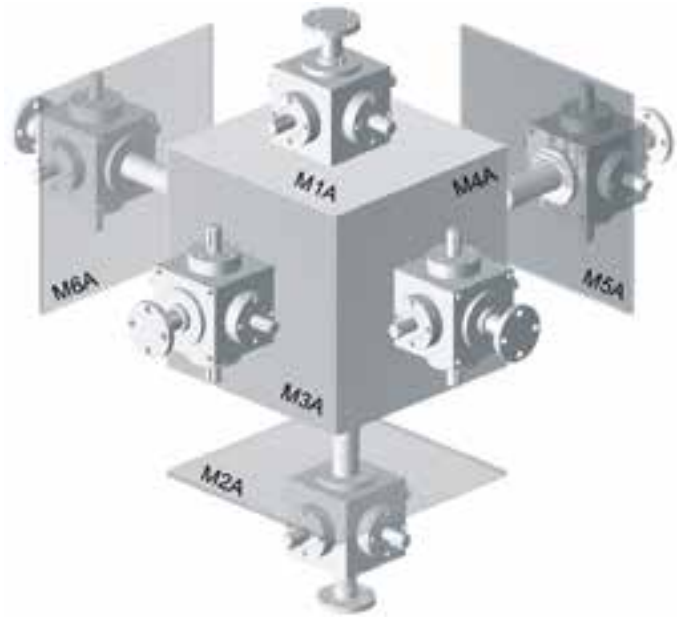

SHG range: Design B

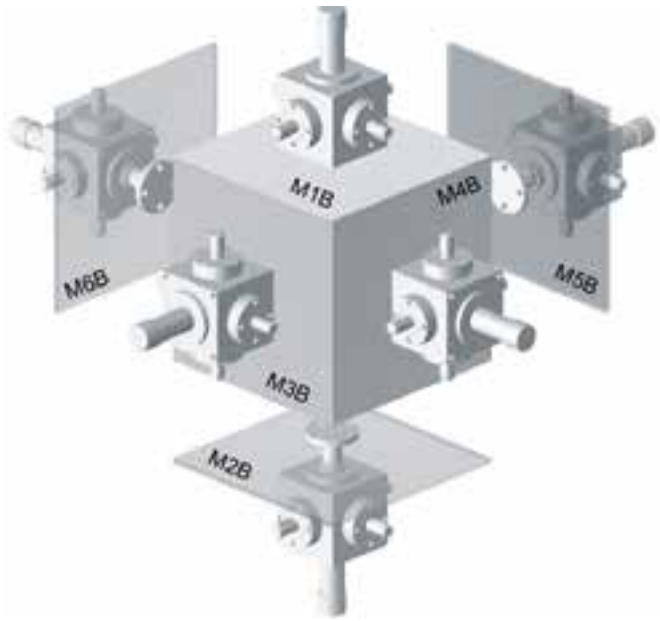

Shaft layout/Position of the oil fittings (b/c/d) - View from screw side

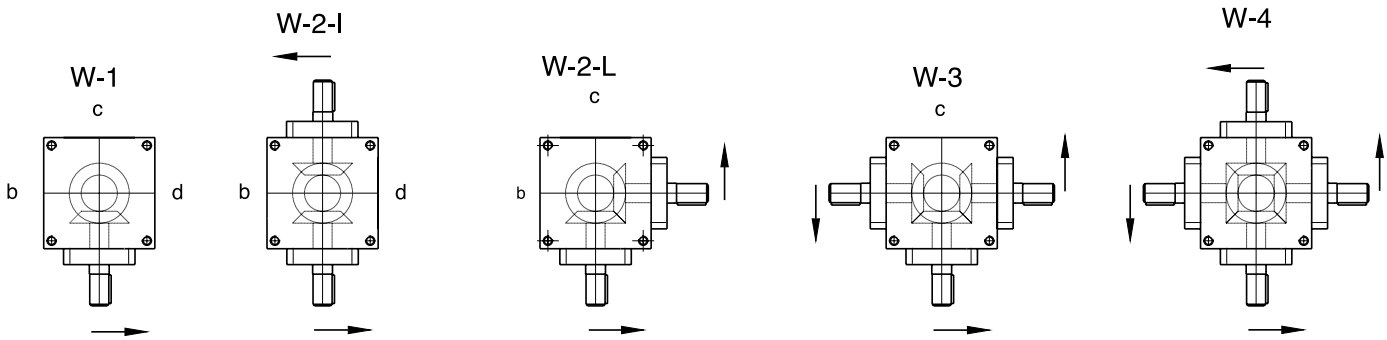

B

C

D

COLUMBUS McKINNON

SHG range
Ordering details

S	H	G	-	■	■	■	-	■	-	■	■	■	■	x	■	■	-	■	:	■	-	■	■	■	-	■	-	■	■	-	■	■	■	■	-	■	■	-	■	■	■	-	■	■	■	■	-	■	■	- ...
1				2				3						4				5				6			7		8				9					10			11				12					13				14	15

No.	Description	
1	**Range**	**SHG**
2	**Size**	**G15 / G25 / G50 / G90**
3	**Configuration type**	**1** **2**
4	**Screw**	**Tr** (DxP) = Trapezoidal screw **Ku** (DxP) = Ball screw
5	**Ratio**	**2:1** **3:1**
6	**Mounting position**	**M1A / M1B / M2A / M2B / M3A / M3B** **M4A / M4B / M5A / M5B / M6A / M6B**
7	**Screw side variant**	
	Size G15 / G25 / G50 / G90	**F** (Type 1)
	Size G25	**K / H** (Type 2)
	Size G15 / G50 / G90	**F** (Type 2)
8	**Protective tube side variant**	
	Size G25	**F / S /Sf / V** (Type 1)
	Size G15 / G50 / G90	**Sf / V** (Type 1)
	Size G25	**K** (Type 2)
	Size G15 / G50 / G90	**F** (Type 2)
9	**Shaft arrangement**	**W1b / W1c / W1d / W2lb / W2ld** **W2Lb / W2Lc / W3c / W4**
10	**Wheel layout**	**Ru / Ro** (for multi-screw systems check for unidirectional movement of the lifting screw/travelling nut) – see page 94–97)
11	**Head**	
	Size G25	**I / II / III / IV** (Type 1)
	Size G15 / G50 / G90	**II / III / IV / GK** (Type 1)
	Size G25	**I / III** (Type 2)
	Size G15 / G50 / G90	**I** (Type 2)
12	**Lift**	**Lift in mm**
13	**Extension VL** **Usable length NL**	**VL in mm** (Type 1) **NL in mm** (Type 2)
14	**Options** **Size G25**	**AI** Mounting brackets
15	**Options/Accessories**	According to specification, description or technical drawing (see chapter Accessories/Options)

Screw jacks
Special travelling nuts

A

B

C

D

Design features

Special travelling nuts are important for the safe and precise operation of systems with horizontally and vertically installed turning screws (type 2). If the critical screw speed is exceeded, the screws must be supported adequately.

This is where specially manufactured intermediate bearings and travelling nuts from Pfaff-silberblau come into play. They are available in various designs to suit requirements, e.g. for the SHE, MERKUR, HSE and SHG ranges.

Special travelling nuts
Technical drawings and dimensions

Travelling nut with trunnion LWZ

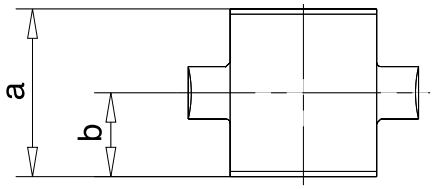

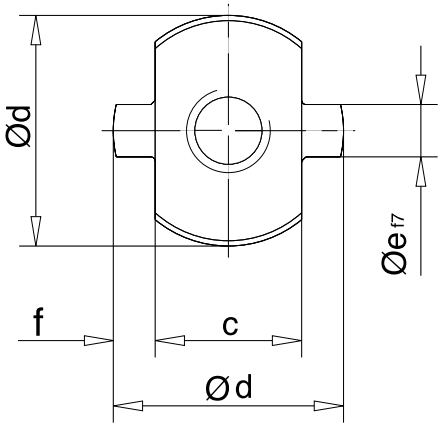

Range SHE/MERKUR M

Size		a	b	c	Ød	Øe	f
0,5	M 1	45	22,5	35	50	14	7,5
1.1	M 2	50	25	40	60	18	10
3.1	M 3	60	30	50	80	25	15
5.1	M 4	70	35	62	95	35	16,5
15.1	M 5	90	45	80	130	50	25
20.1	-	120	60	92	150	65	29
25	M 6	145	72,5	120	190	75	35
35	M 7	on request					
50.1	M 8						

Range HSE

Size	a	b	c	Ød	Øe	f
32	45	22,5	35	50	14	7,5
36.1	50	25	40	60	18	10
50.1	60	30	50	80	25	15
63.1	70	35	62	95	35	16,5
80.1	120	60	80	130	50	25
100.1	120	60	92	150	65	29
125.1	on request					
140						

Travelling nut with hole pattern EFM

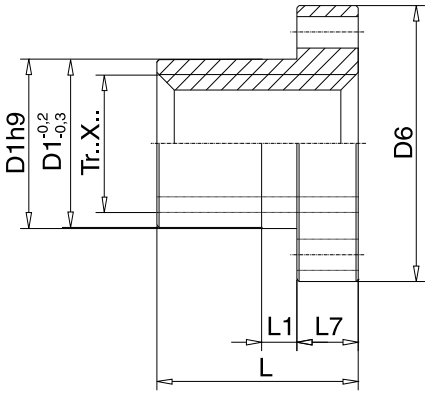

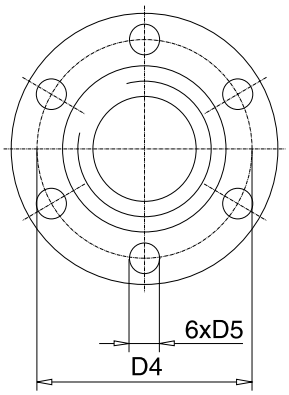

Range SHE

Size	D1h9	D4	D5	D6	L	L1	L7
1.1	45	60	7	75	40	-	12
3.1	50	65	9	80	45	-	15
5.1	70	85	9	100	60	-	18
15.1	90	110	11	130	75	-	25
20.1	90	115	13,5	145	100	-	30
25	130	160	17,5	190	120	-	35

Range MERKUR M/SHG G

Size	D1h9	D4	D5	D6	L	L1	L7
M 0	28	38	6	48	35	8	12
M 1	28	38	6	48	44	8	12
M 2	32	45	7	55	44	8	12
G 15	32	45	7	55	44	8	12
M 3	38	50	7	62	46	8	14
M 4/G 50	63	78	9	95	73	10	16
M 5/G 90	85	105	11	125	99	10	20

Range HSE

Size	D1h9	D4	D5	D6	L	L1	L7
32	on request						
36.1	45	60	7	75	55	-	12
50.1	58	73	9	87	80	-	18
63.1	70	88	11	105	100	-	22
80.1	75	93	11	110	130	-	25
100.1	90	115	13,5	145	130	-	30
125.1	on request						
200.1							

Special travelling nuts
Technical drawings and dimensions

A

Travelling nut with flat surface LSF

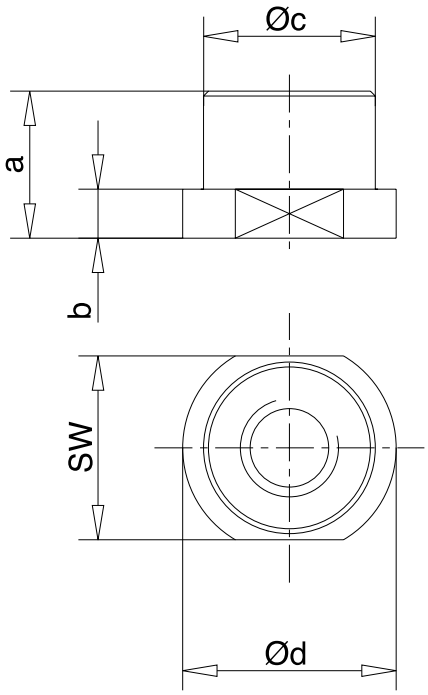

Other designs on request

Range SHE/MERKUR M

Size		a	b	Øc	Ød	SW
0,5	M 1	32	10	40	50	44
1.1	M 2	40	12	45	65	50
3.1	M 3	45	15	50	80	62
5.1	M 4	60	18	70	87	75
15.1	M 5	75	25	90	110	95
20.1	-	100	30	90	120	100
25	M 6	120	35	130	155	135
35	M 7	145	35	150	190	160
50.1	M 8	155	50	160	225	180

Range HSE

Size	a	b	Øc	Ød	SW
32	45	12	40	50	44
36.1	55	15	45	65	50
50.1	80	18	70	87	75
63.1	100	22	80	105	85
80.1	130	25	90	110	95
100.1	130	30	90	120	100
125.1	160	45	150	190	160

Travelling nut with spherical support LSA

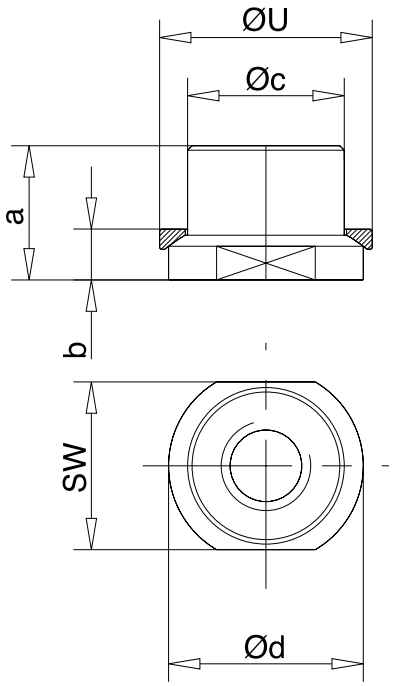

Other designs on request

Range SHE/MERKUR M

Size		a	b	Øc	Ød	ØU	SW
0,5	-	32	10	40	50	55	44
1.1	-	40	12	45	65	65	50
3.1	M 3	45	15	50	80	82	62
5.1	M 4	60	18	70	87	95	75
15.1	-	75	25	90	110	120	95
20.1	-	100	30	90	120	120	100
25	M 6	120	35	130	155	175	135
35	M 7	145	35	150	190	195	160
50.1	M 8	155	50	160	225	220	180

Range HSE

Size	a	b	Øc	Ød	ØU	SW
32	45	12	40	50	55	44
36.1	55	15	45	65	65	50
50.1	80	18	70	87	95	75
63.1	100	22	80	105	110	85
80.1	130	25	90	110	120	95
100.1	130	30	90	120	120	100
125.1	160	45	150	190	195	160

B

C

D

Special travelling nuts
Technical drawings and dimensions

Single flange nut KGM for ball thread (Ku) – for all ranges

Size ball screw Ku		Load ratings		Nut dimensions									Safety nut
d0 x P	Dw - i	C_{dyn} [kN]	C_{stat} [kN]	D1	D4	D5	D6	L1	L7	L12	S	Hole pattern	LF
20x05-RH	3,5 - 4	22,7	42,6	36	47	6,6	58	10	10	43	M6	1	15
20x10-RH	3,5 - 2	14	21,3	36	47	6,6	58	10	10	26	M6	1	20
25x05-RH	3,5 - 4	24,2	54,8	40	51	6,6	62	10	10	43	M6	1	15
25x10-RH	3,5 - 3	19,8	41,1	40	51	6,6	62	16	10	59	M6	1	20
32x05-RH	3,5 - 5	30,8	91,4	50	65	9	80	10	12	50	M6	1	15
32x10-RH	5 - 3	36,6	74,5	50	65	9	80	16	12	40	M6	1	25
40x10-RH	7 - 4	79,2	170,5	63	78	9	93	16	14	76	M8x1	2	30
40x20-RH	7 - 2	48,7	85,3	63	78	9	93	17	14	51	M8x1	2	50
50x10-RH	7 - 6	112,1	328,8	75	93	11	110	16	16	101	M8x1	2	30
50x20-RH	12,7 - 3	158	244,8	85	103	11	120	16	16	117	M8x1	2	50
50x24-RH	12,7 - 3	158	244,8	85	103	11	120	18	16	92	M8x1	2	55
63x10-RH	7 - 6	122,8	438,2	90	108	11	125	16	18	103	M8x1	2	30
63x20-RH	12,7 - 3	173,5	333,2	95	115	13,5	135	25	20	121	M8x1	2	35
80x10-RH	7 - 6	135	584,5	105	125	13,5	145	16	20	105	M8x1	2	30
80x20-RH	12,7 - 5	282	800,7	125	145	13,5	165	25	25	170	M8x1	2	50
100x10-RH	7 - 6	146,2	749,9	125	145	13,5	165	16	22	107	M8x1	2	30
100x20-RH	12,7 - 6	336,6	1203,1	150	176	17,5	202	25	30	195	M8x1	2	60
125x10-RH	7 - 6	157,9	952,6	150	170	13,5	190	25	25	110	M8x1	2	40
125x24-RH	12,7 - 6	373,9	1622,2	170	196	17,5	222	25	40	235	M8x1	2	60
160x20-RH	15 - 6	522	2476	on request									

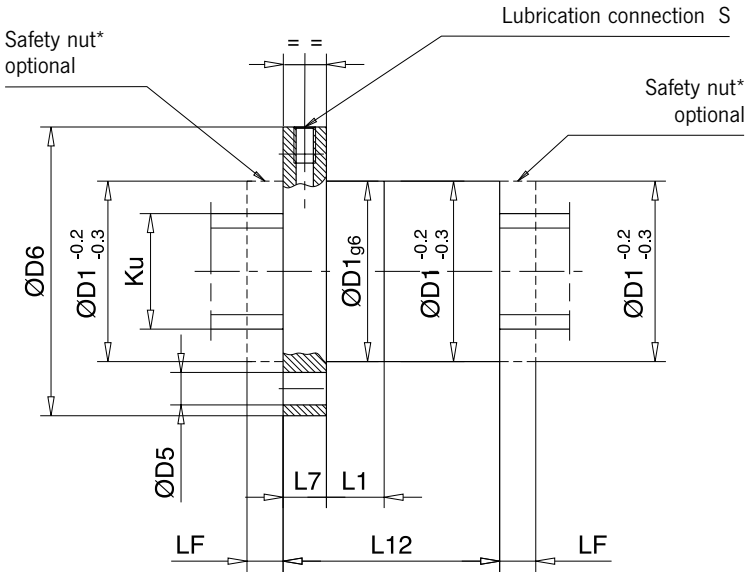

*Depending on applied load direction

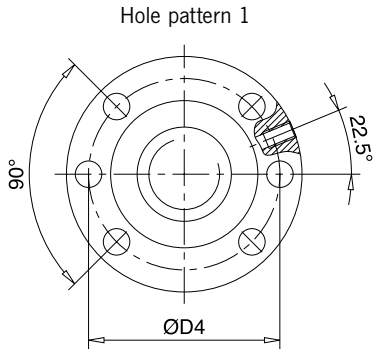

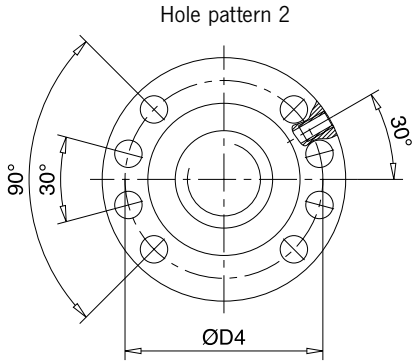

Screw jacks
Lifting screw protective covers

A

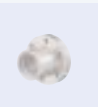

B

C

D

Flexible protection boots

Screw protection covers can increase the service life of the screw jacks. Protection boots made of various materials are used for this purpose. They protect the screw jacks from dirt and external influences. The protection boots are elastic and folded like an accordion and can also be fitted over mechanically interlocking machine parts.

In the standard version, protection boots made of the material PN-100 or PN-200 are used and fastened on both ends with galvanised metal clamping collars (see drawing below). Stainless steel clamping collars (V2A) are also available on request.

For extension limits Az > 1000 mm, the protection boots are fitted with limiting devices to prevent over-stretching of the individual protection boot segments.

In case of inclined or horizontal installation, the protection boots must from a stroke length of 400 mm upwards be fitted with support rings to prevent them from getting caught in the threads. If they are installed in a vertical position, one support ring per 1000 mm stroke is required.

Apart from the standard design, special designs of protection boots are also available on request.

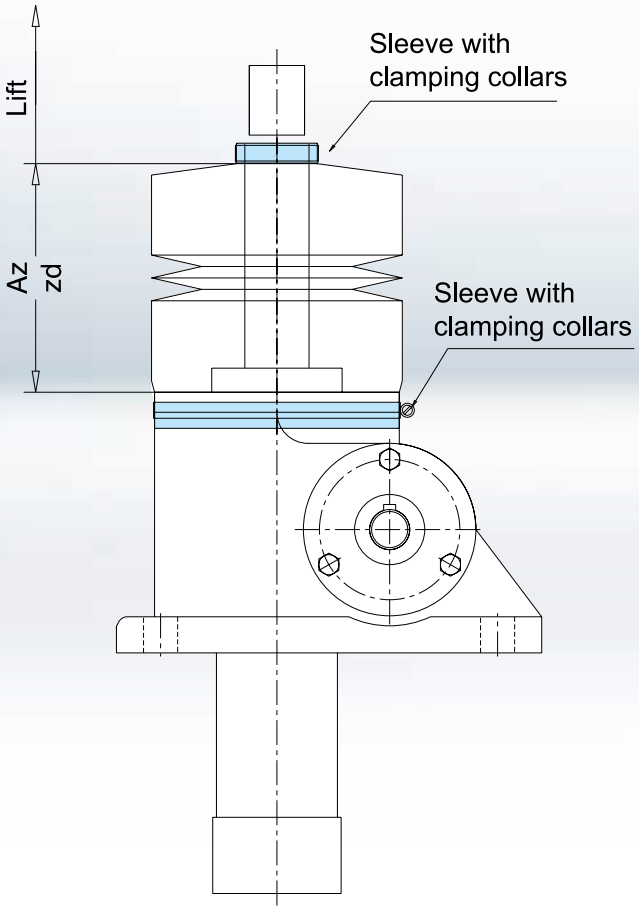

Lifting screw protective covers
Design features and ordering details

Features and processing of protection boots

Material	Design	Temperature range °C	Dustproof	Waterproof	Oil-resistant	Chemical-resistant	Spark-resistant	zd/Lift
PN-100*	Polygonal folding	-15 to 70	●	●	● [2]	-	-	0,12
PN-200*	Polygonal folding	-15 to 100	●	●	●	○	-	0,15
PN-CSM-Rubber sheeting	Round	-28 to 110	●	●	○	-	-	on request
PN-CR Rubber fabric	Round	-38 to 100	●	●	●	● [1]		on request
PN-ALU-Glass fiber	Sewn round	-20 to 200	●	-		-	●	on request

*Standard ○ only conditional ● resistant ● [1] only if coated with Teflon ● [2] with synth. oil, with inner coating only

Ordering details flexible protection boots

P N – ☐☐☐ – ☐☐ / ☐☐ – Ø ☐☐ / Ø ☐☐ – ☐☐ x ☐☐ / ☐☐ x ☐☐ – ☐ – ☐ – ☐☐☐☐☐ x ☐☐

1 2 3 4 5 6 7 8

No.	Description	
1	**Range**	**Flexible protection boot**
2	**Material**	
3	**zd/Az**	zd = minimum length / Az = maximum length
4	**Inside/Outside**	Inside Ø / Outside Ø
5	**Sleeve**	Sleeve 1 Sleeve 2
6	**Protection against extension**	0 = yes 1 = no
7	**Number of support rings**	
8	**Screw size**	Tr (DxP) / Ku (DxP)

Lifting screw protective covers
Technical drawings

A

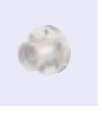

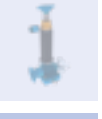

Technical drawings flexible protection boots: Type 1, SHE range, Design A and B, all mounting positions

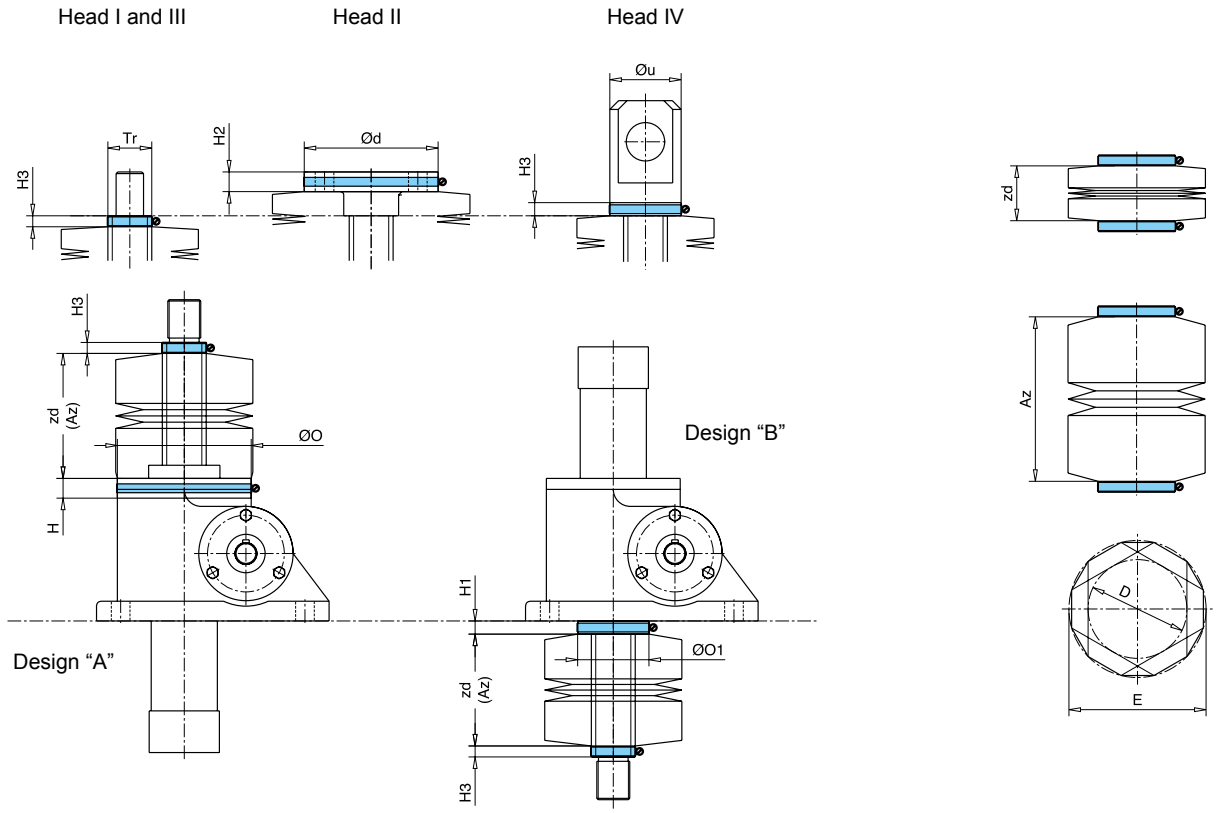

Technical drawings flexible protection boots: Type 2, SHE range, Design A and B, all mounting positions

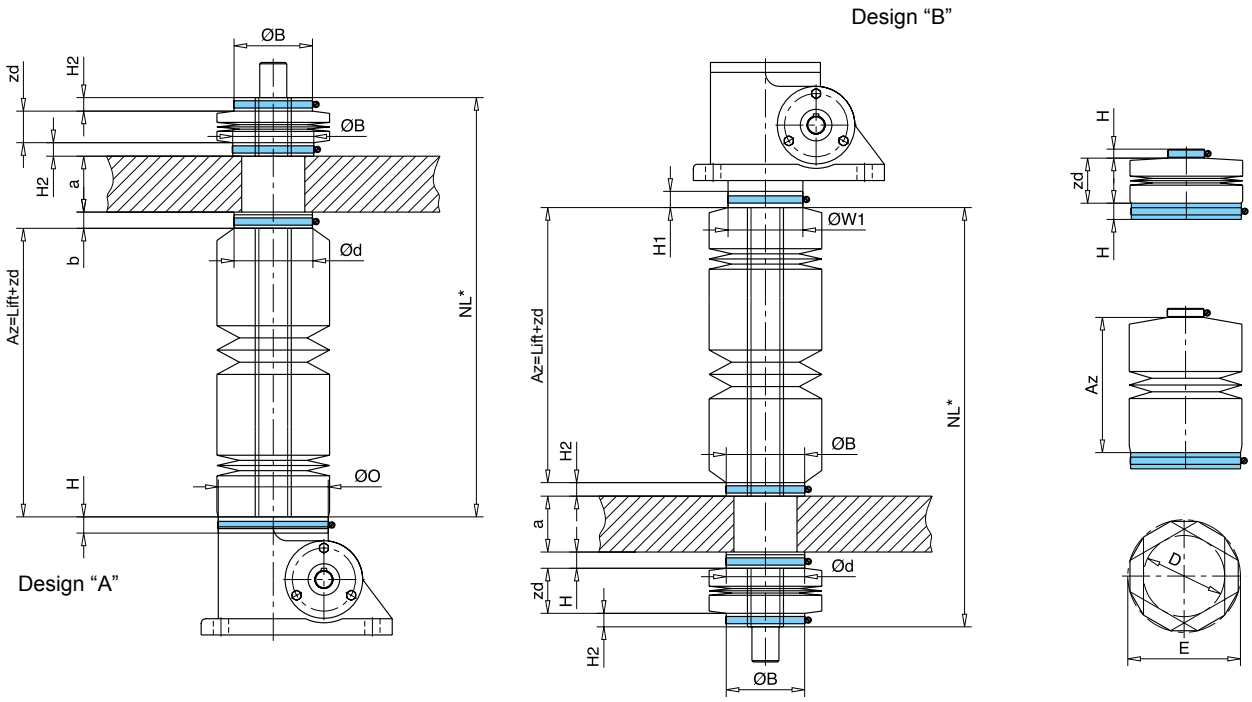

*Addition of individual dimensions produces NL

COLUMBUS McKINNON

Lifting screw protective covers
Dimensions

Dimensions flexible protection boots: Type 1, SHE range, Design A and B, all mounting positions															
SHE		0,5	1.1	2	3.1	5.1	15.1	20.1	25	35	50.1	75	100.1	150.1	200.1
Housing connection design A															
Housing	ØO	65	88	98	98	122	150	185	205	260	170	250	240	300	on request
	H	12					15					20			
Housing connection design B															
Housing	ØO1	36	52	48	48	65	80	100	130	150	170	250	240	300	
	H1	12									15	20			
Screw head															
Head II	Ød	65	72	98	98	122	150	185	205	260	300	200	200	220	
	H2	12	12	12	12	18	20	25	25	25	30	30	30	30	
Head I/III	ØTr	18	24	26	30	40	60	70	90	100	120	140	160	190	
Head IV	Øu	30	40	48	50	65	90	110	130	150	170	200	220	260	
	H3	12					15					20			
Minimum zd_{min} Design A															
Head II		24	33	42	42	45	60	66	75	80	70	20	25	30	
Head I/III		12	12	12	12	12	15	11	22	15	12	12	12	10	
Head IV		20	20	24	24	24	30	26	37	30	25	20	25	30	
Minimum zd_{min} Design B															
Head II		12	30	30	30	33	48	54	63	68	70	20	20	30	
Head I/III		12	12	12	12	12	12	12	12	12	12	12	12	10	
Head IV		8	17	12	12	12	18	14	25	18	25	20	20	30	
Dimensions flexible protection boot (material PN 100 and PN 200)															
Head II	D	65	75	100	100	120	150	185	200	260	300	300	300	310	
	E	105	125	140	140	180	210	245	260	320	360	360	360	370	
Head I/III/IV	D	38	45	63	63	75	110	130	150	150	200	245	245	280	
	E	75	85	105	105	125	150	185	210	210	260	295	295	340	

Dimensions flexible protection boots: Type 2, SHE range, Design A and B, all mounting positions															
SHE		0,5	1.1	2	3.1	5.1	15.1	20.1	25	35	50.1	75	100.1	150.1	200.1
Housing connection design A															
Housing	ØO	65	88	98	98	122	150	185	205	260	210	on request	240	300	on request
	H	12	12	12	12	12	15	15	15	15	20		20	20	
Housing connection design B															
Housing	ØW1	45	52	60	68	83	110	140	160	180	210		280	340	
	H1	12	12	12	12	12	15	15	15	15	20		20	20	
Travelling nut connection															
	Ød	50	65	76	80	87	110	120	155	190	225		260	300	
	b	12	12	12	12	12	15	15	15	15	20		20	20	
On site connection															
	ØB	50	65	80	80	87	110	120	155	190	225		260	300	
	H2	12	15	15	15	15	15	15	15	15	25		20	20	
Dimensions flexible protection boot (material PN 100 and PN 200)															
	ØD	38	38	65	63	75	110	130	150	150	200		245	280	
	ØE	75	75	105	105	125	150	185	210	210	260		295	360	

Lifting screw protective covers
Technical drawings

A

B

C

D

Technical drawings flexible protection boots: Type 1, MERKUR/HSE/SHE range

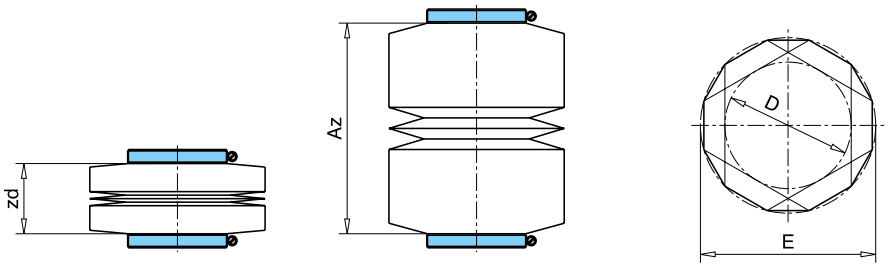

Protection boot fasteners – head area

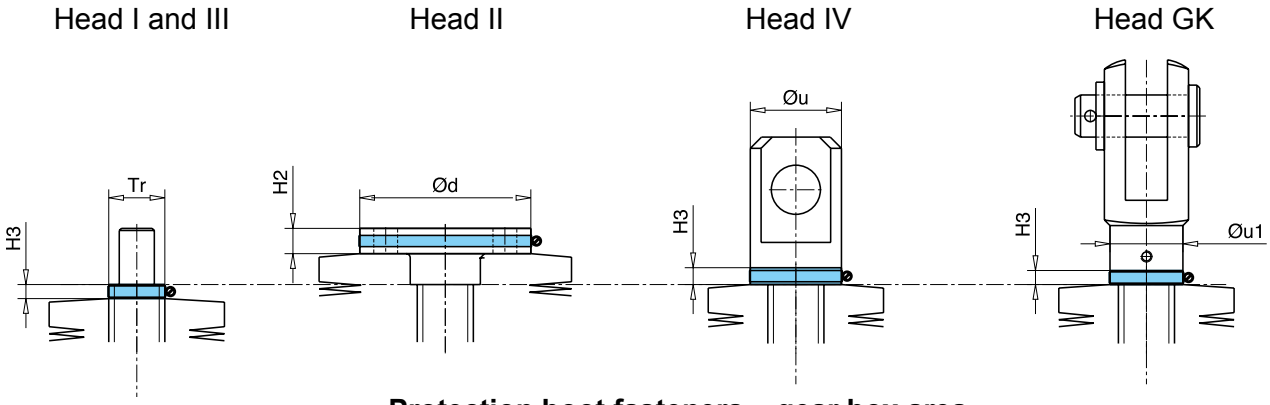

Protection boot fasteners – gear box area

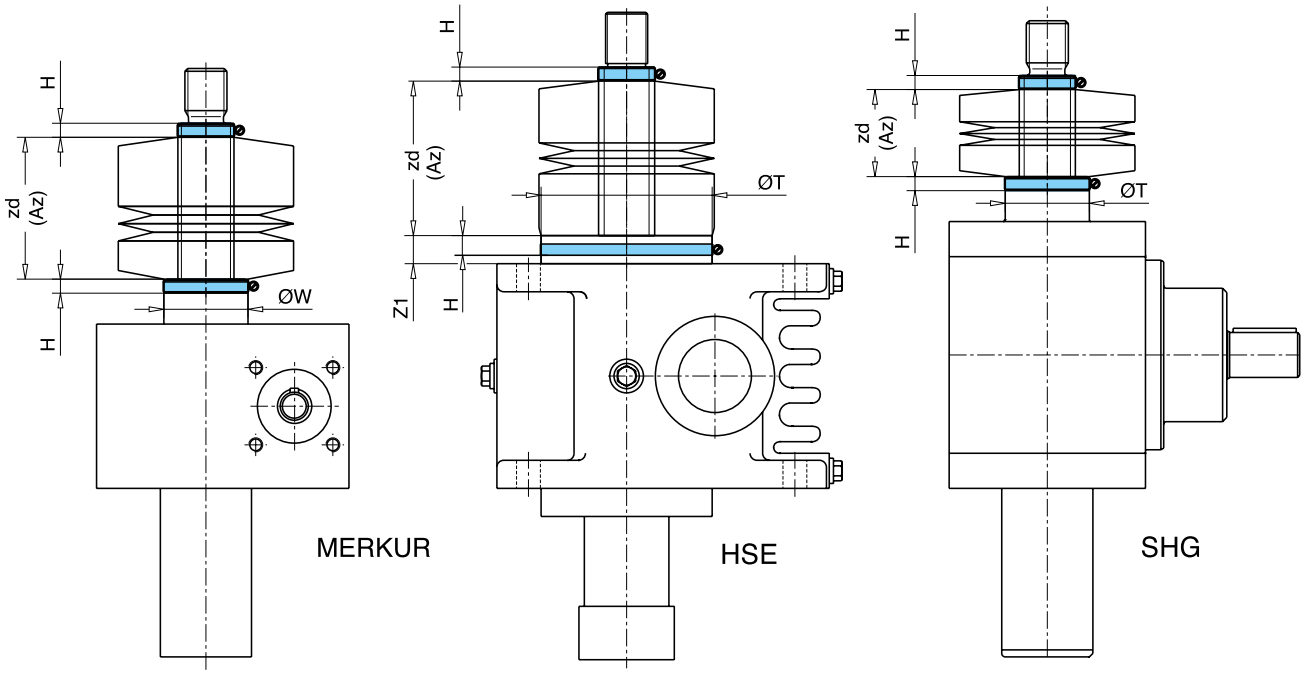

COLUMBUS McKINNON

Lifting screw protective covers
Dimensions

Dimensions flexible protection boots: Type 1, MERKUR range

MERKUR		M 0	M 1	M 2	M 3	M 4	M 5	M 6	M 7	M 8
Housing connection										
Housing	ØW	26	30	39	46	60	85	120	145	170
	H	12	12	12	12	12	12	15	15	15
Screw head										
Head II	Ød	50	65	80	90	110	150	220	260	310
	H2	12	12	12	12	15	20	30	30	30
Head I/III	ØTr*	14	18	20	30	40	60	70	100	120
Head IV	Øu	25	30	40	45	60	85	120	160	170
	H3	12	12	12	12	12	12	15	15	15
Head GK	Øu1	14	20	25	34	52	60	-	-	-
	H3	12	12	12	12	12	12	-	-	-
Minimum zd_{min}										
Head II		7	12	16	16	19	37	42	52	102
Head I/III		0	0	0	0	0	0	0	0	0
Head IV/GK		3	4	7	5	4	7	12	12	22
Dimensions flexible protection boot - inside/outside Ø (material PN 100 and PN 200)										
Head II	D	65	65	100	100	120	150	220	260	310
	E	105	105	140	140	180	210	280	320	370
Head I/III/IV/GK	D	38	38	45	63	100	100	120	200	200
	E	75	75	85	105	140	140	180	260	260

Dimensions for ball screw (Ku) on request
*For ball screw (Ku) connection Head I-III = Ku Ø

Dimensions flexible protection boots: Type 1, HSE range

HSE		32	36.1	50.1	63.1	80.1	100.1	125.1	140	200.1
Housing connection										
Housing	ØT	62	72	92	122	152	182	222	on request	352
	H	15	16	18	20	25	25	25		25
Screw head										
Head II	Ød	65	72	92	122	150	182	222		352
	H2	12	12	12	18	20	20	25		30
Head I/III	ØTr	18	24	40	50	60	70	100		160
Head IV	Øu	30	40	50	65	90	110	140		220
	H3	12	12	12	12	15	15	20		20
Minimum zd_{min} with configuration H (see page 62–79)										
Head II		31	33	38	42	50	50	70		90
Head I/III		8	8	10	10	10	15	15		90
Head IV		20	20	20	20	20	20	20		90
Minimum zd_{min} with configuration F (see page 62–79)										
Head II		39	41	46	51	64	69	89		120
Head I/III		16	16	18	19	19	24	24		120
Head IV		28	28	28	29	34	39	39		120
Dimensions flexible protection boot - inside/outside Ø (material PN 100 and PN 200)										
Head II	D	65	65	100	120	150	185	260		300
	E	105	105	140	180	210	245	320		360
Head I/III/IV	D	38	45	65	75	110	130	150		245
	E	75	85	105	125	150	185	210		295

Type 1, SHG range

SHG		G 15	G 25	G 50	G 90
Housing connection					
Housing	ØT	39	100	60	90
	H	12	12	15	15
Screw head					
Head II	Ød	90	98	110	170
	H2	12	12	15	25
Head I/III	ØTr	24	35	40	60
	ØKu	(25)	-	(40/32)	(63)
Head IV	Øu	-	50	65	80
Head GK	Øu1	34	-	52	-
	H3	12	12	15	15
Minimum zd_{min} with configuration H (see page 80–93)					
Head II		-	33	-	-
Head I/III		-	3	-	-
Head IV		-	15	-	-
Minimum zd_{min} with configuration F (see page 80–93)					
Head II		16	43	19	32
Head I/III		0	13	0	0
Head IV		-	25	4	7
Head GK		5	-	4	-
Dimensions flexible protection boot - inside/outside Ø (material PN 100 and PN 200)					
Head II	D	100	120	120	185
	E	140	180	180	245
Head I/III/IV/GK	D	65	75	110	110
	E	105	125	150	150

( ) Values in brackets for configurations with ball screw (Ku)

Lifting screw protective covers
Technical drawings

A

B

C

D

Technical drawings flexible protection boots: Type 2, MERKUR/HSE/SHE range

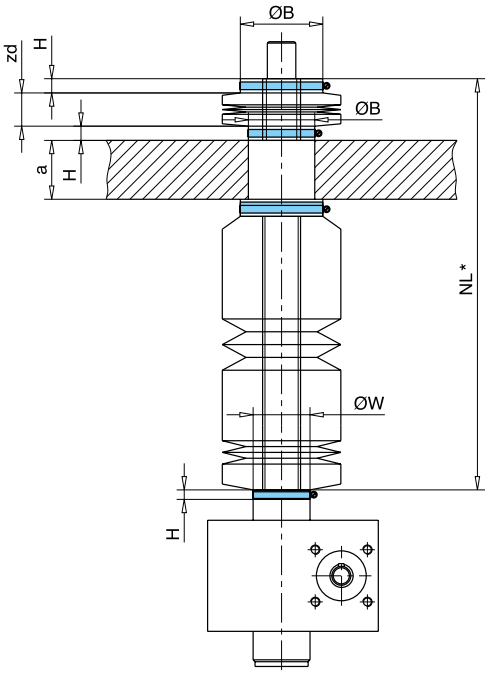

MERKUR

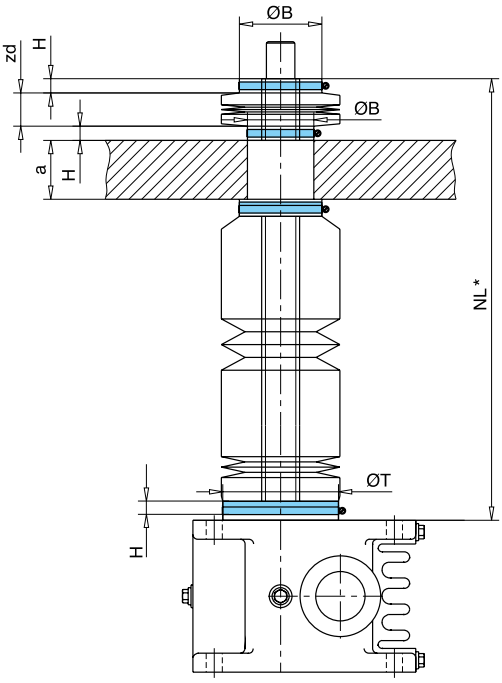

HSE

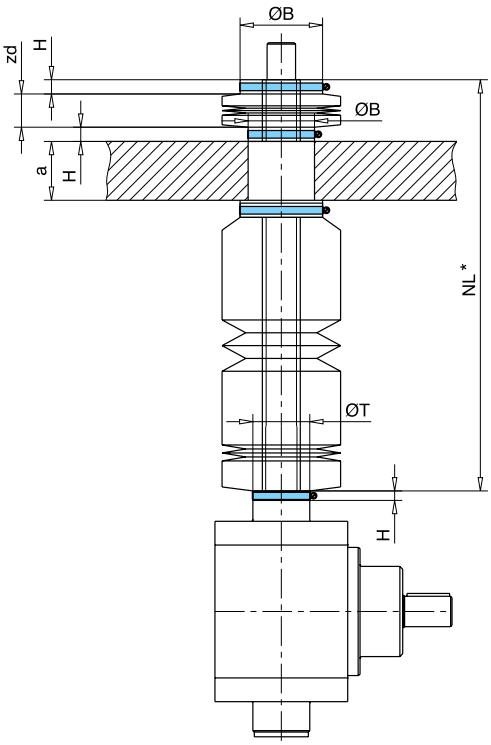

SHG

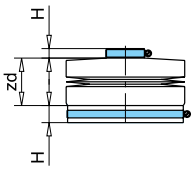

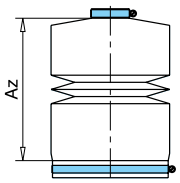

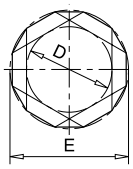

*Addition of individual dimensions produces NL

Lifting screw protective covers
Dimensions

Dimensions flexible protection boots: Type 2, MERKUR range									
MERKUR	M 0	M 1	M 2	M 3	M 4	M 5	M 6	M 7	M 8
Connecting dimensions: Housing									
ØW	26	30	39	46	60	85	120	145	170
H	12	12	12	12	12	12	15	15	15
Travelling nut connection									
Ød	50	50	65	80	87	110	155	190	225
b	12	12	12	15	18	25	25	25	25
On-site connection									
ØB	50	50	65	80	87	110	155	190	225
H	12	12	15	15	15	15	25	25	25
Dimensions flexible protection boot (material PN 100 and PN 200)									
D	38	38	38	65	75	110	150	150	200
E	75	75	75	105	125	150	210	210	260

Dimensions flexible protection boots: Type 2, HSE range									
HSE	32	36.1	50.1	63.1	80.1	100.1	125.1	140	200.1
Connecting dimensions: Housing									
ØT	62	72	92	122	152	182	222	on request	352
H	15	16	18	20	25	25	25		25
Travelling nut connection									
Øy	50	65	87	105	110	120	190		260
H	12	15	18	18	15	15	15		25
On-site connection									
ØB	50	65	87	105	110	120	190		260
H	12	15	15	15	15	15	15		25
Dimensions flexible protection boot (material PN 100 and PN 200)									
D	38	38	75	110	110	130	150		245
E	75	75	125	150	150	185	210		295

Dimensions flexible protection boots: Type 2, SHG range				
SHG	G 15	G 25	G 50	G 90
Connecting dimensions: Housing				
ØT	39	100	60	90
H	12	12	15	15
Travelling nut connection				
Ød	65	87	87	120
b	12	15	15	15
On-site connection				
ØB	65	87	87	120
H	12	15	15	15
Dimensions flexible protection boot (material PN 100 and PN 200)				
D	65	75	75	130
E	105	125	125	185

Screw jacks
Couplings and connecting shafts

A

B

C

D

Features and processing

Configuration to suit requirements: screw jacks from Columbus McKinnon Engineered Products can be assembled modularly to suit the application.

Each element meets the highest quality standards. This also applies to the couplings and connecting shafts. The torsionally flexible couplings protect the worm gear screw jacks, bevel gearboxes and motors by damping shocks and vibrations

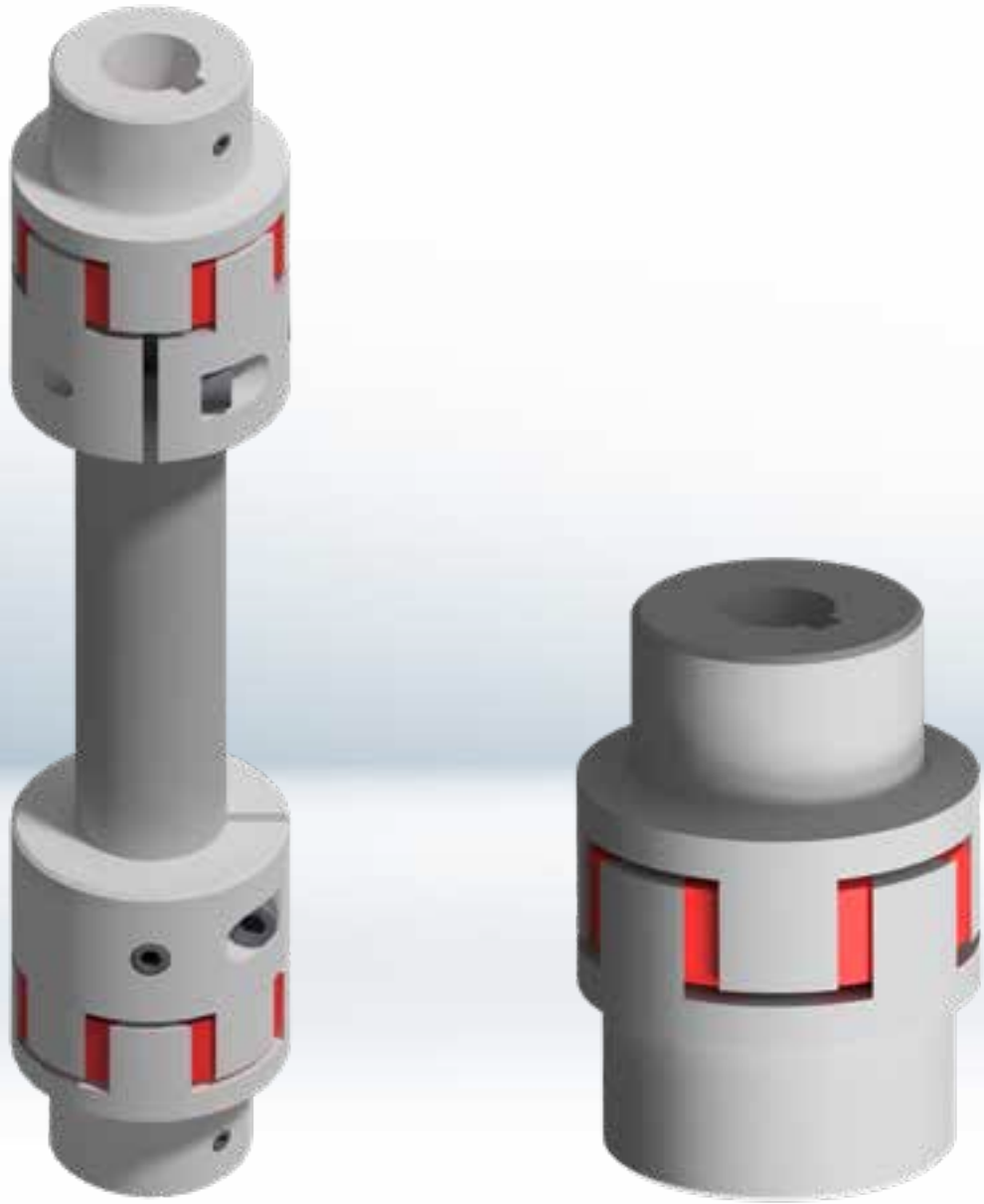

Couplings and connecting shafts
Flexible couplings

Features and processing

R series: the torsionally flexible couplings of the R series dampen vibrations and shocks and compensate axial, radial and angular displacements. They are therefore preferable to rigid couplings or shaft connections.

Technical information: R range

Size	Nominal torque T_N [Nm]			Max. angular displacement [°]	Torsion angle at T_N [°]	Max. axial displacement [mm]	Max. radial displacement [mm]	Mass moments of inertia[1] J [kgm²]	Material[2]	Weight[3] [kg] Design	
R	92° Shore	95° Shore	98° Shore							a/a	b/b
14	7	-	12	1,2	6,4	1	0,17	$5{,}60 \times 10^{-6}$	AL	0,14	0,14
19/24	10	-	17	1,2		1,2	0,2	$1{,}03 \times 10^{-6}$		0,32	0,36
24/28	35	-	60	0,9	3,2	1,4	0,22	$4{,}30 \times 10^{-4}$	AL or St	0,6	0,72
28/38	95	-	160	0,9		1,5	0,25	$9{,}80 \times 10^{-4}$		0,97	1,33
38/45	190	-	325	1,0		1,8	0,28	$96{,}5 \times 10^{-4}$		2,08	2,46
42/55	265	-	450	1,0		2	0,32	$0{,}35 \times 10^{-2}$		3,21	3,93
48/60	310	-	525	1,1		2,1	0,36	$1{,}06 \times 10^{-2}$		4,41	5,19
55/70	410	-	685	1,1	3,2	2,2	0,38	$2{,}03 \times 10^{-2}$	GG or St	6,64	8,1
65/75	625	940	-	1,2		2,6	0,42	$3{,}80 \times 10^{-2}$		10,13	11,65
75/90	1280	1920	-	1,2		3	0,48	$8{,}20 \times 10^{-2}$		16,03	19,43
90/100	2400	3600	-	1,2		3,4	0,5	$23{,}8 \times 10^{-2}$		27,5	31,7

[1] Values for steel hubs b-b and max. finish bore without keyway. For aluminum, the value is reduced by a factor of approx. 3. See table on page 108.
[2] For use with hardened drive shafts is select coupling with material cast iron or steel (sizes R19/24 - R48/60 also in stainless steel 1.4571).
[3] Weight for material gray cast iron, for aluminum approx. 60 % less.

Color coding of the various flexible spiders:

- 92° Shore orange
- 95/98° Shore purple

Operating temperature:

- 92° Shore -40° to +90 °C
- 95/98° Shore -30° to +90 °C

Dimensioning:

The nominal torque (T_N) of the couplings – with **impact factor** S[4] taken into account– must be at least equal to the system torque (T_{ANL}) to be transferred.

$$T_N \geq T_{ANL} \times S$$

[4] Impact factor S = 2 for use with three-phase motors

Couplings and connecting shafts
Technical drawings and dimensions

A

B

C

D

Technical drawings: R range

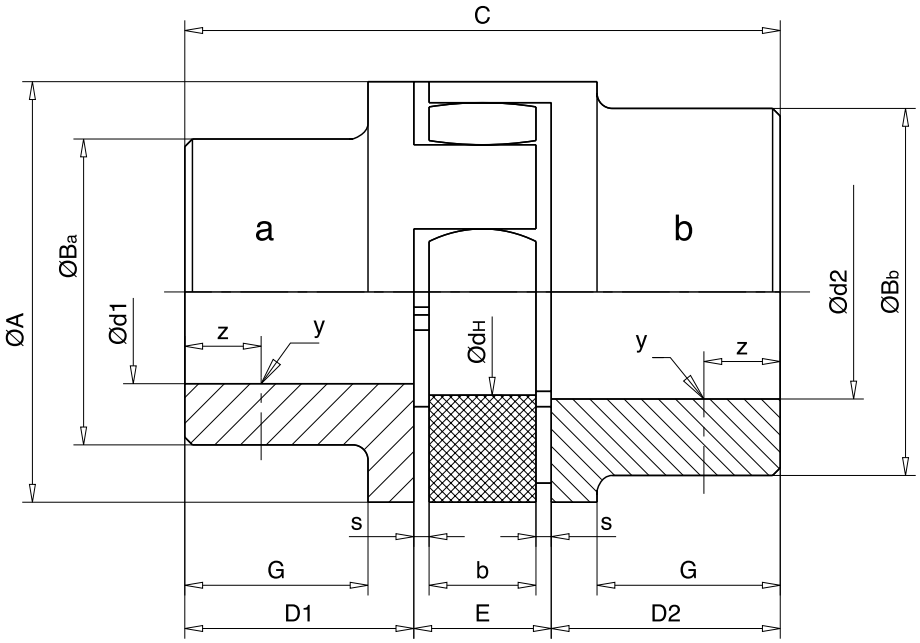

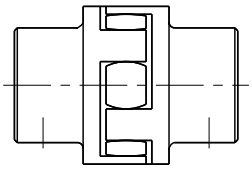

Design: aa

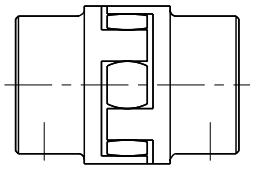

Design: bb

Dimensions: R range

Size R	Ready-drilled holes ØdH7[1] Hub a Ød1 min	Hub a Ød1 max	Hub b Ød2 min	Hub b Ød2 max	ØA	$ØB_a$	$ØB_b$	C	D1[2] and D2[2]	E	s	b	G	$Ød_H$	y	z
14	-	-	6	14	30	30	-	35	11	13	1,5	10	-	10	M4	~5
19/24	6	19	6	24	40	32	40	66	25	16	2	12	20	18	M5	10
24/28	8	24	8	28	55	40	48	78	30	18	2	14	24	27	M5	10
28/38	10	28	10	38	65	48	65	90	35	20	2,5	15	28	30	M8	15
38/45	12	38	38	45	80	66	77	114	45	24	3	18	37	38	M8	15
42/55	14	42	42	55	95	75	94	126	50	26	3	20	40	46	M8	20
48/60	15	48	48	60	105	85	102	140	56	28	3,5	21	45	51	M8	20
55/70	20	55	55	70	120	98	120	160	65	30	4	22	52	60	M10	20
65/75	22	65	65	75	135	115	135	185	75	35	4,5	26	61	68	M10	20
75/90	30	75	75	90	160	135	160	210	85	40	5	30	69	80	M10	25
90/100	40	90	90	100	200	160	180	245	100	45	5,5	34	81	100	M12	25

[1] Feather key grooves are configured according to DIN 6885/1 standards
[2] Special hub lengths available on request

Couplings and connecting shafts
Flexible overload couplings

Features and processing

Flexible overload couplings limit the drive torque (lifting force) of the lifting system, thus protecting the mechanism from overloads and malfunctions in the event of the drive system becoming blocked.

MKR range: Torque is transferred via wear-resistant, oil-proof and temperature-protected friction linings, which are held in place by means of disc springs.

MKR (R = friction linings). Friction linings are also available in rust-free configuration for outdoor use.

Technical information: MKR range

Size	Torque limit for overload		Rotary speed n max.	Weight pre-drilled
	Type MKR1 [Nm]	Type MKR2 [Nm]	[min^{-1}]	[kg]
0	2 – 10	10 – 20	7000	1,3
01	6 – 30	30 – 60	6500	3,0
1	14 – 70	70 – 130	5600	3,2
2	26 – 130	130 – 250	4300	6,5
3	50 – 250	250 – 550	3300	10,1
4	110 – 550	550 – 1100	2700	19,5
5	140 – 700	700 – 1400	2200	23,4

Dimensioning:
The controlling torque of the overload coupling is factory-adjusted, with reference to starting torque T_A to 1.4 times the torque to be transferred (T_N).

Production Pfaff-silberblau: Worm gear screw jacks housing machining

Couplings and connecting shafts
Flexible overload couplings

A

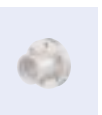

Technical drawings: MKR range

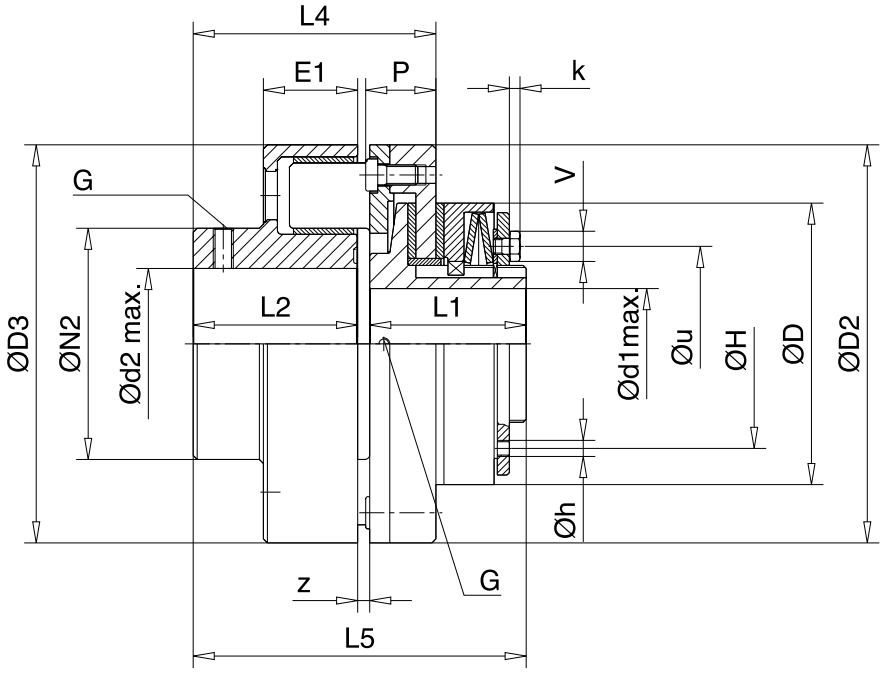

Dimensions: MKR range

Size	ØD	ØD3	ØD2	Ød[1]min	Ød[1]max	Ød[2]min	Ød[2]max	E1	G	H
0	45	80	80	7	201)	11	30	23	M4	37
01	58	110	110	12	22	11	48	40	M6	46
1	68	110	110	12	25	11	48	40	M6	50
2	88	140	140	15	35	13	60	42	M8	67
3	115	160	160	19	45	25	65	39	M10	84
4	140	198	198	25	55	30	75	47	M8	104
5	170	198	198	30	65	50	75	47	M8	125

Size	Øh	k	L1	L5	L4	P	L2	ØN2	z	Øu	V
0	3	5)	33	66	48	15	30	45	3	37	2[2]
01	5	5)	45	91	68	22	40	86	3	46	2,5[2]
1	5	5)	52	96	69	23	42	86	3	50	3[2]
2	6	3	57	119	93	33	55	100	3	67	10
3	6	5,5	68	136	112	35	60	108	4	84	13
4	7	5,5	78	165	122	35	82	115	6	97	13
5	8	5,5	92	179	127	40	82	115	6	109	13

[1] Up to Ø19 groove according to DIN 6885-1, over Ø19 groove according to DIN 6885-3
[2] Countersunk screw with hexagon socket DIN 7991

B

C

D

Couplings and connecting shafts
Highly flexible connecting shafts

Features and processing

Highly flexible connecting shafts connect individual drive elements to form complete lifting systems with a central drive.

They dampen vibrations and shocks, compensate for axial, radial and angular displacements and can be used up to the critical speed without pillow blocks (see speed-length diagram).

The fitting of pillow blocks allows the shaft length L to be doubled or quadrupled. However, in a one-piece configuration, it is limited to a length of 6 m due to the standard lengths of tube normally available.

Four different versions are available for different speed ranges and requirements

Technical information: ZR range

Size	Nominal torque T_N [1]	Locking screw		Max. angle displacement	Axial displacement	Mass moments of inertia		Suitable pillow blocks	Weight	
ZR	[Nm]	Starting torque[2] [Nm]	M1	[°]	[mm]	for 2 hubs [kgm²]	for 1 m tube length [kgm²]		for 2 hubs [kg]	for 1 m tube length [kg]
19/24	17	14	M6	0,9	1,2	$0{,}8278 \times 10^{-4}$	$0{,}932 \times 10^{-4}$	SN 505	0,3	1,3
24/28	30	14	M6	0,9	1,4	$8{,}830 \times 10^{-4}$	$4{,}414 \times 10^{-4}$	SN 507	1,5	2
28/38	70	35	M8	0,9	1,5	$20{,}05 \times 10^{-4}$	$7{,}431 \times 10^{-4}$	SN 508	2,7	3,1
38/45	130	35	M10	1,0	1,8	$20{,}15 \times 10^{-4}$	$11{,}59 \times 10^{-4}$	SN 509	3	3,6
42/55	150	69	M10	1,0	2	$47{,}86 \times 10^{-4}$	$17{,}07 \times 10^{-4}$	SN 510	5	4,1
48/60	245	120	M12	1,1	2,1	$74{,}68 \times 10^{-4}$	$24{,}06 \times 10^{-4}$	SN 511	6,5	4,6

[1] These nominal torque settings are suitable for operation with light impacts. If impacts are heavy, an impact factor S of 1.4 must be taken into account.
[2] Values valid for St hubs

Speed-length diagram: ZR range

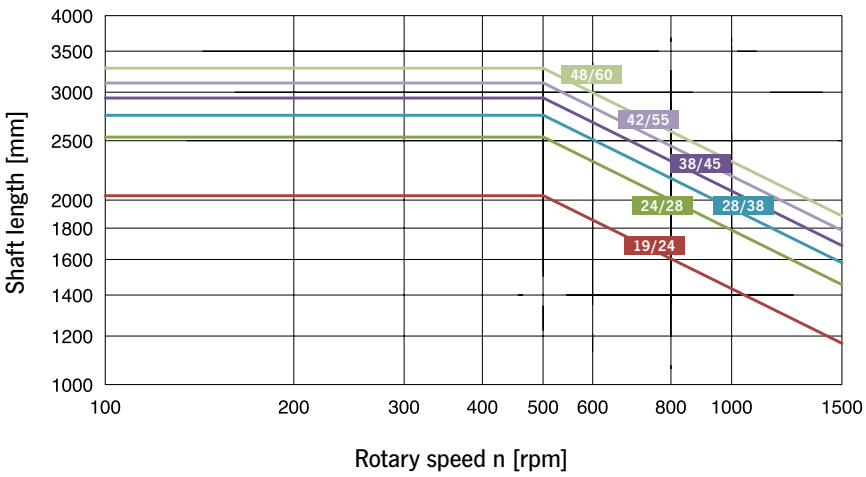

Rotary speed range:

- n = 1500 rpm

Operating temperature:

- -40° bis +90 °C
  (up to 120 °C for brief periods)

Dimensioning:

The nominal torque (T_N) of the ZR shaft – with **impact factor S**[1] taken into account – must be at least equal to the system torque (T_{ANL}) to be transferred.

$$T_N \geq T_{ANL} \times S$$

Couplings and connecting shafts
Connecting shafts

A

Technical drawings: ZR range

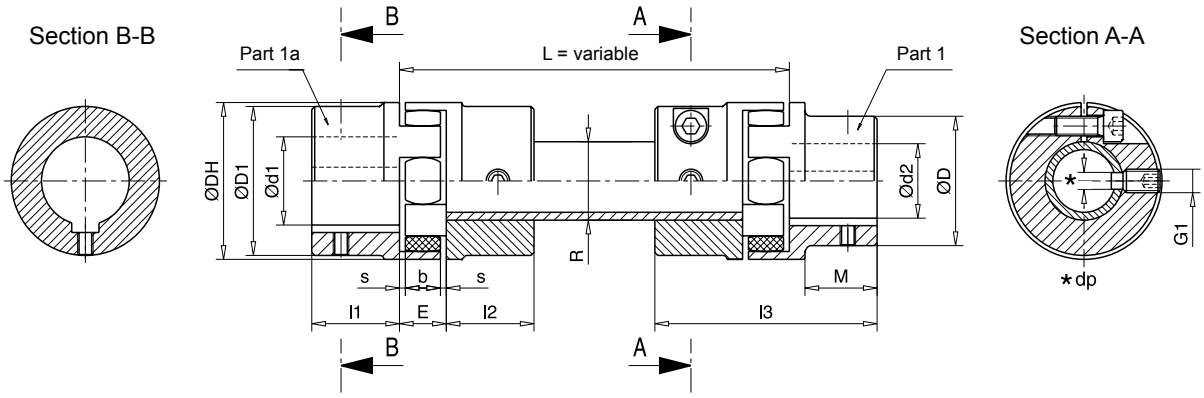

Dimensions: ZR range

Size ZR	Ready-drilled holes ØdH7[1] Part 1 min Ød2	Part 1 max Ød2	Part 1a min Ød1	Part 1a max Ød1	ØDH	ØD	ØD1	ØdH	l1 l2	M	s	b	E	l3	ØR	G1	dp[1]
19/24	6	19	19	24	40	32	41	18	25	20	2	12	16	66	20x3	M6	4
24/28	8	24	24	28	55	40	55	27	30	24	2	14	18	78	30x4	M8	5,5
28/38	10	28	28	38	65	48	65	30	35	28	2,5	15	20	90	35x4	M10	7
38/45	12	38	38	45	80	66	77	38	45	37	3	18	24	114	40x4	M12	8,5
42/55	28	42	42	55	95	75	94	46	50	40	3	20	26	126	45x4	M12	8,5
48/60	28	48	48	60	105	85	102	51	56	45	3,5	21	28	140	50x4	M16	12

[1] Feather key groove conforming to DIN 6885/1

Assembly area Pfaff-silberblau: Special design screw jack SHE 200.1 with 8 m long screw and protection boot. Design for a static load of 400 tons.

B

C

D

Couplings and connecting shafts
Connecting shafts

Technical information: G / GX / GZ range

	G range	GX range	GZ range
Rotary speed range	n = 750 rpm	n = 1500 rpm	n = 3000 rpm
Operating temperature	-40 to +90 °C (up to 120 °C for brief periods)	max. 150 °C[2]	max. 80 °C

Dimensions: G / GX / GZ range

Size	Nominal torque T_N [1), 2)] range			Max. angle displacement		Mass moments of inertia	Suitable pillow blocks	Weight	
	G [Nm]	GX [Nm]	GZ [Nm]	G+GZ [°]	GX [°]	[kgm²]		for 2 hubs [kg]	for 1 m tube length [kg]
1	10	10	10	3	1	0,00021	SN 507	1,0	1,1
2	20	30	20	3	1	0,00052	SN 509	2,2	1,4
4	40	60	40	3	1	0,00076	SN 510	3,4	1,6
8	80	120	80	3	1	0,00185	SN 513	7,3	2,2
16	160	240	160	3	1	0,00297	SN 516	12,4	2,5
25	250	370	250	3	1	0,00538	SN 519	19,1	3,1
30	400	550	400	3	1	0,0116	SN 522	31,1	4,8
50	600	-	600	3	1	0,0116	SN 522	32,1	4,8
90	900	1500	900	3	1	0,0283	SN 528	58,7	7,6

[1)] These nominals torque settings are suitable for operation with light impacts. If impacts are heavy, an impact factor S of 1.4 must be taken into account.
[2)] From +80 °C onwards, the nominal torque is considerably reduced.

Speed-length diagram: G / GX / GZ range

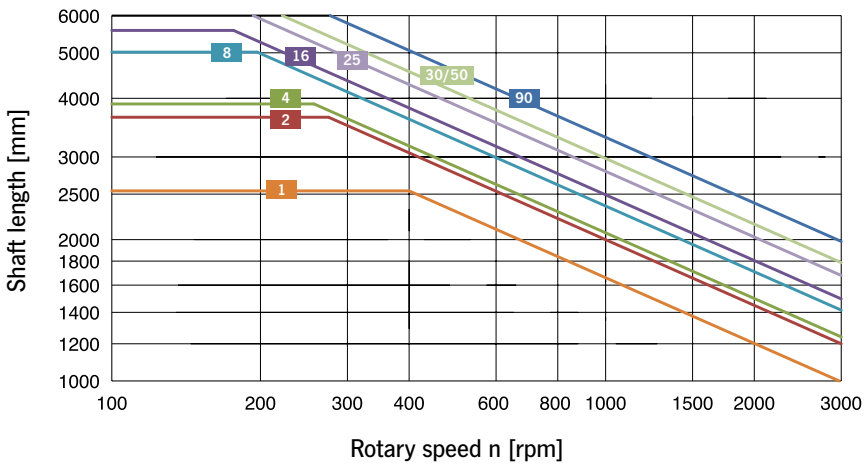

Dimensioning:

The nominal torque (T_N) of the G / GX / GZ shaft – with **impact factor S[1)]** taken into account – must be at least equal to the system torque (T_{ANL}) to be transferred.

$$T_N \geq T_{ANL} \times S$$

Couplings and connecting shafts
Connecting shafts

Technical drawings: G / GX / GZ range

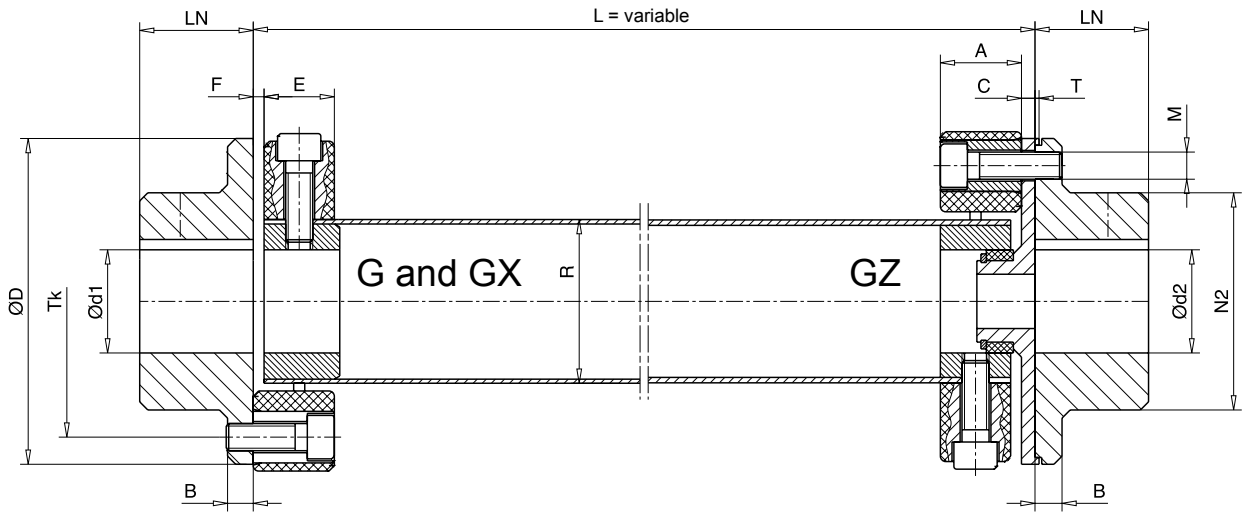

Dimensions: G / GX / GZ range

Size	A	B	C	ØD	Ready-drilled holes ØdH7[1] max. Ød1/d2	E	F	L_N	$ØN_2$	ØR	T	T_K/M
1	24	7	5	56	25	22	2	24	36	30	1,5	Ø44/2xM6
2	24	8	5	85	38	20	4	28	55	40	1,5	Ø68/2xM8
4	28	8	5	100	45	24	4	30	65	45	1,5	Ø80/3xM8
8	32	10	5	120	55	28	4	42	80	60	1,5	Ø100/3xM10
16	42	12	5	150	70	36	6	50	100	70	1,5	Ø125/3xM12
25	46	14	5	170	85	40	6	55	115	85	1,5	Ø140/3xM14
30	58	16	5	200	100	50	8	66	140	100	1,5	Ø165/3xM16
50	58	16	5	200	100	50	8	66	140	100	1,5	Ø165/3xM16
90	70	19	5	260	110	62	8	80	160	125	2	Ø215/3xM20

[1] Feather key groove conforming to DIN 6885/1

Couplings and connecting shafts
Ordering details

Ordering details couplings

□□□-□□/□□-□□□□-□□/□□
1 2 3 4 5

No.	Description	
1	**Range**	R MKR
2	**Size**	
3	**Torque** (only for MKR ranges)	
4	**Hub drill-hole d1**	
5	**Hub drill-hole d2**	

Ordering details high flexible connecting shafts

□□-□□/□□-□□□□-□□/□□
1 2 3 4 5

No.	Description	
1	**Range**	ZR G GX GZ
2	**Size**	
3	**Length**	
4	**Hub drill-hole d1**	
5	**Hub drill-hole d2**	

Screw jacks
Accessories

A

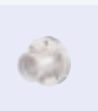

B

C

D

Design features

Using the high-quality accessories from Pfaff-silberblau, it is possible to configure worm gear screws jacks optimally. Whether direct attachment of motors, various flanges, lubrication device or electrical synchronization control: the versatile and structurally stable accessory components are very important for the efficient and long-lasting driving of your system.

Accessories
Swivel plates

Technical drawings: Swivel plates

In order to allow worm gear screw jacks to carry out swiveling and tipping movements, the drive elements must be secured at two points and permitted to move. This can be done using swivel plates and a head IV or articulated head. The bending moment resulting from the swiveling motion should be minimized as much as possible by means of low-friction articulations.

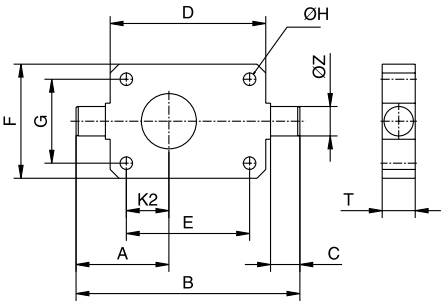

Standard

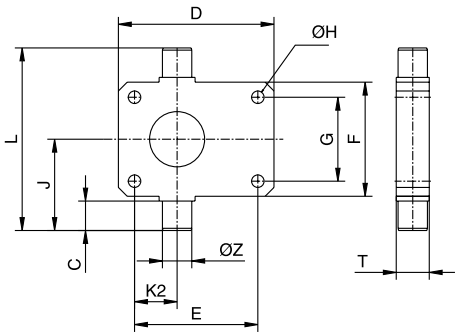

Transverse

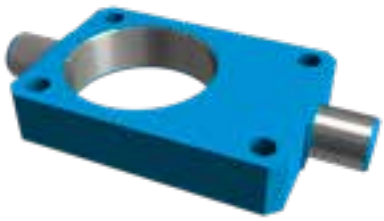

Dimensions: Swivel plates

SHE range

Size	A	B	C	D	E	F	G	ØH	J	K2	L	T	ØZ	Load max. Standard	Load max. Transverse
0,5	on request														
1.1	95,5	205	25	150	130	100	80	8,5	77,5	58	155	25	20	15 kN	15 kN
3.1	102,5	240	35	165	135	120	90	13	97,5	50	195	35	30	30 kN	30 kN
5.1	126,5	305	45	212	168	155	114	17	124	58	248	45	40	50 kN	50 kN
10	143,5	350	55	235	190	200	155	21	157,5	63,5	315	55	50	80 kN	100 kN
15.1	143,5	350	55	235	190	200	155	21	157,5	63,5	315	55	50	80 kN	100 kN
20.1	190	430	65	295	240	215	160	28	175	95	350	65	60	200 kN	160 kN
25	202,5	495	70	350	280	260	190	35	202,5	95	405	70	65	220 kN	250 kN
35 / 50.1 / 75 / 100.1 / 150.1	on request														

MERKUR range

Size	A	B	C	D	E	F	G	ØH	J	K2	L	T	ØZ		
0	34,5	85	10	60	48	50	38	6,6	37,5	16	75	15	10		
1	48,5	115	15	80	60	72	52	9	53,5	21	107	20	15		
2	62,5	145	20	100	78	85	63	9	65	29	130	25	20		
3	76,5	175	20	130	106	105	81	11	75	42	150	30	25		
4	110,5	245	30	180	150	145	115	13,5	105	63	210	40	35		
5	120,5	275	35	200	166	165	131	22	120	66	240	50	45		
6 / 7 / 8	on request														

HSE range

Size	A	B	C	D	E	F	G	ØH	J	K2	L	T	ØZ	Load max. Standard	Load max. Transverse
32	on request														
36.1	80	190	25	138	110	105	80	9	78,5	40	157	25	20	10 kN	10 kN
50.1	105	250	35	175	140	130	100	13	102,5	50	205	35	30	25 kN	25 kN
63.1	140	330	45	235	190	160	120	17	127,5	70	255	45	40	50 kN	50 kN
80.1	160	390	55	275	220	200	150	21	157,5	75	315	55	50	100 kN	100 kN
100.1	185	465	65	330	270	230	175	28	182,5	87,5	365	65	60	110 kN	110 kN
125.1	227,5	565	75	410	330	300	230	39	–	110	–	80	75	230 kN	–
140 / 200.1	on request														

Accessories
Swivel mounting bases

A

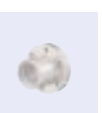

Technical drawings: Swivel mounting bases

In order to allow worm gear screw jacks to carry out swiveling and tipping movements, the drive elements must be secured at two points and permitted to move. This canbe done using a swiveling bearing and a head IV or articulated head, or by means of a swivel-lug configuration. The lateral force resulting from the swiveling motion should be minimized as much as possible by means of low-friction articulations.

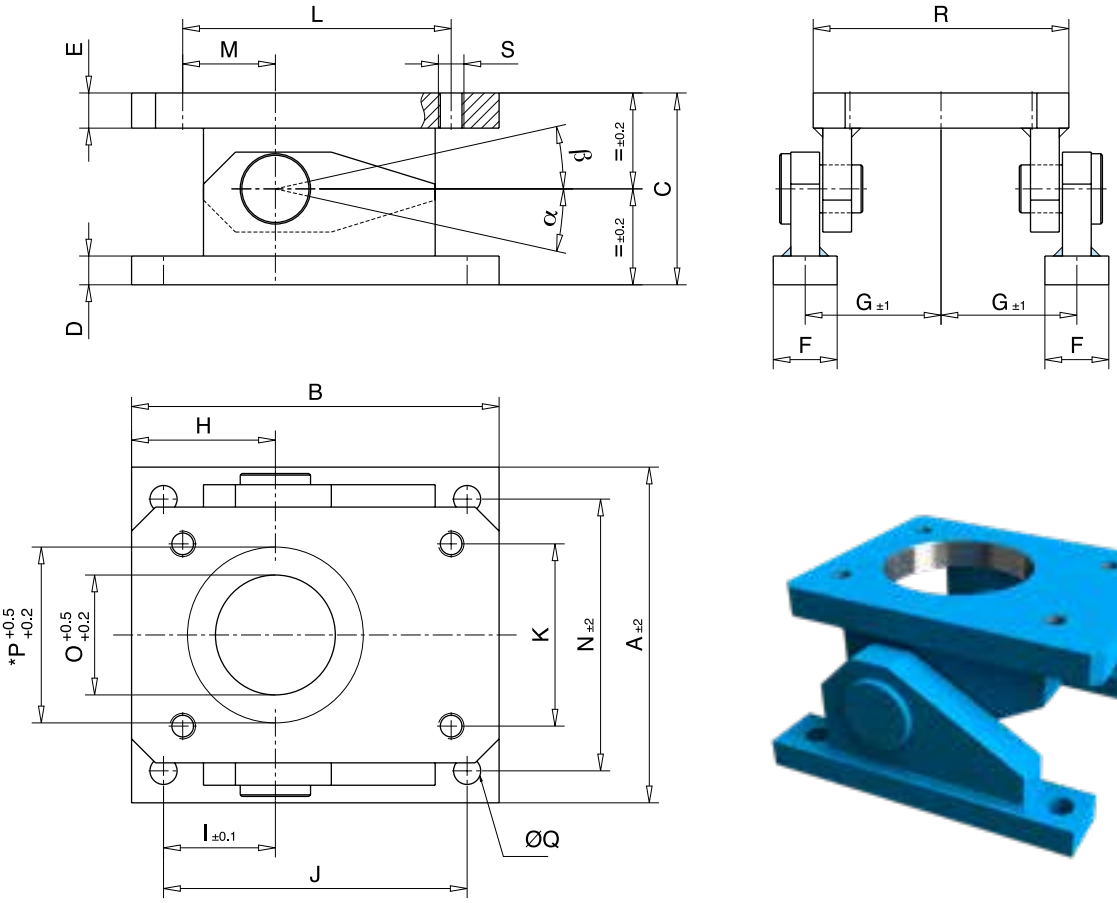

Only the most recent dimension plans are binding.

B

Dimensions: Swivel mounting bases

Size	A	B	C	D	E	F	G	H	I	J	K	L	M	N	O	P*	ØQ	R	S	[α°]	[β°]
SHE 1.1	150	138	60	10	10	20	60	54	40	110	80	130	58	120	80	80	9	108	M8	26	42
HSE 32	138										62	95	31		62	62					
HSE 36.1	138										80	110	40		72	72					
SHE 3.1	180	170	110	16	20	40	70	65	50	140	90	135	50	140	70	70	14	130	M12	35	55
HSE 50.1											100	140	50		100	100				25	
SHE 5.1	210	230	120	18	22	40	85	90	70	190	114	168	58	170	110	110	17	160	M16	28	44
HSE 63.1											120	190	70		122	122					
SHE 15.1	270	270	150	22	28	50	110	100	75	220	155	190	63,5	220	130	130	21	200	M20	28	45
HSE 80.1											150	220	75		152	152					
SHE 20.1	350	340	190	30	33	60	145	130	95	280	160	240	95	290	100	160	26	260	M24	30	45
HSE 100.1											175	270	87,5		185	185					

*only applies to anti-turn device

C

D

Accessories
Motor mounting flanges SHE range

Technical drawings: SHE range

In certain situations, the versatile use of the worm gear screw jacks requires the direct mounting of motors. If the weight and dimensions of the two drive elements are not too different, IEC flanges and torsionally flexible couplings can be used for direct mounting of the motor.

If the drive motor is provided by the customer, we must be given a dimensional drawing of the connections. The customer must also specify the mounting side on the screw jack, right or left.

For reasons of simplification, only frequently required motor mounting flanges are shown below.

We will be pleased to advise you!

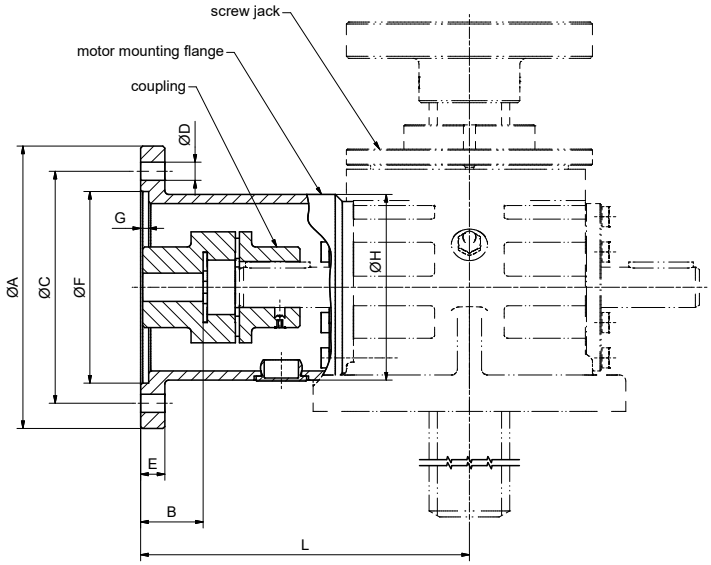

Dimensions motor mounting flanges: SHE range

Size	IEC-Flange ØA	Motor shaft length B	Coupling	Hole circle ØC	Hole ØD	Dimension E	Centering ØF	Centering depth G	Dimension ØH	Dimension L
1.1	Ø105	23	R19/24*	Ø85	8x Ø6,6	10	Ø70 H7	4	Ø65	118
		30	R19/24*	Ø85	8x Ø6,6	10	Ø70 H7	4	Ø65	123
	Ø120	40	R24/28*	Ø100	8x Ø6,6	10	Ø80 H7	4	Ø65	140
		50	R24/28*	Ø100	8x Ø6,6	10	Ø80 H7	4	Ø65	150
	Ø140	40	R24/28*	Ø115	8x Ø9	10	Ø95 H7	4	Ø65	140
		50	R24/28*	Ø115	8x Ø9	10	Ø95 H7	4	Ø65	150
3.1	Ø105	23	R19/24	Ø85	8x Ø6,6	10	Ø70 H7	4	Ø70	136
		30	R19/24	Ø85	8x Ø6,6	10	Ø70 H7	4	Ø70	141
	Ø120	40	R19/24	Ø100	8x Ø6,6	10	Ø80 H7	4	Ø70	151
	Ø140	50	R24/28	Ø115	8x Ø9	10	Ø95 H7	4	Ø86	164
			R28/38*	Ø115	8x Ø9	10	Ø95 H7	4	Ø86	164
5.1	Ø140	30	R24/28	Ø115	8x Ø9	12	Ø95 H7	4	Ø92	163
		40	R24/28	Ø115	8x Ø9	12	Ø95 H7	4	Ø92	173
			R28/38	Ø115	8x Ø9	12	Ø95 H7	4	Ø92	173
		50	R24/28	Ø115	8x Ø9	12	Ø95 H7	4	Ø92	183
			R28/38	Ø115	8x Ø9	12	Ø95 H7	4	Ø92	183
	Ø160	60	R24/28	Ø130	8x Ø9	12	Ø110 H7	4	Ø92	193
			R28/38	Ø130	8x Ø9	12	Ø110 H7	4	Ø92	193
15.1	Ø140	40	R28/38	Ø115	8x Ø9	10	Ø95 H7	4	Ø96	200
	Ø160	50	R28/38	Ø130	8x Ø9	10	Ø110 H7	4	Ø96	210
		60	R28/38	Ø130	8x Ø9	10	Ø110 H7	4	Ø96	220
			R38/45*	Ø130	8x Ø9	10	Ø110 H7	4	Ø96	222
20.1	Ø160	40	R28/38	Ø130	8x Ø9	12	Ø110 H7	5	Ø114	221
		50	R28/38	Ø130	8x Ø9	12	Ø110 H7	5	Ø114	233
			R38/45	Ø130	8x Ø9	12	Ø110 H7	5	Ø114	235
	Ø200	60	R42/55*	Ø165	8x Ø11	12	Ø130 H7	5	Ø130	248
			R48/60*	Ø165	8x Ø11	12	Ø130 H7	5	Ø130	248
		80	R42/55*	Ø165	8x Ø11	12	Ø130 H7	5	Ø130	268
			R48/60*	Ø165	8x Ø11	12	Ø130 H7	5	Ø130	268
	Ø250	80	R42/55*	Ø215	8x Ø14	15	Ø180 H7	5	Ø130	268
			R48/60*	Ø215	8x Ø14	15	Ø180 H7	5	Ø130	268

*Coupling must be reworked on the hub on the gearbox side.

Accessories

Motor mounting flanges MERKUR range

A

Technical drawings: MERKUR range

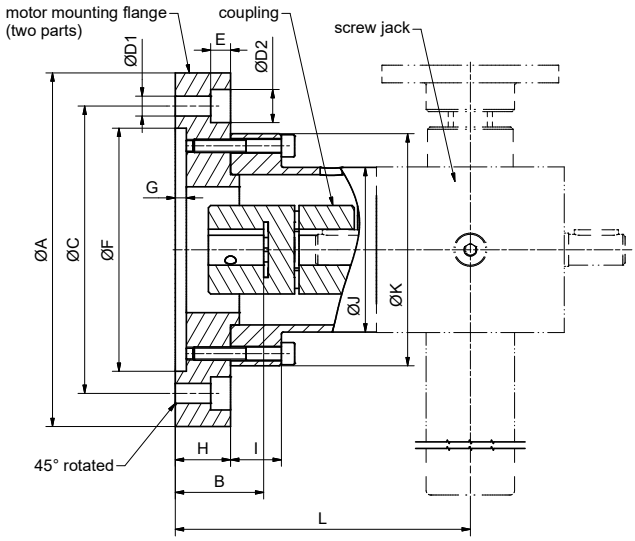

Dimensions motor mounting flanges: MERKUR range

Size	IEC-Flange ØA	Motor shaft length B	Coupling	Hole circle ØC	Hole ØD2 - E / ØD1	Centering ØF	Centering depth G	Dimension H	Dimension I	Dimension J	Dimension K	Dimension L
M0	Ø80	20	R14	Ø65	4x Ø10 - 6 / Ø5,5	Ø50 H8	4	15	6	Ø50	Ø80	79
	Ø90	23	R14	Ø75	4x Ø10 - 6 / Ø5,5	Ø60 H8	4	18	6	Ø50	Ø80	82
	Ø105	20	R14	Ø85	4x Ø11 - 7 / Ø6,6	Ø70 H8	4	15	6	Ø50	Ø80	79
	Ø120	23	R14	Ø100	4x Ø11 - 7 / Ø6,6	Ø80 H8	4	18	6	Ø50	Ø80	82
M1	Ø90	23	R14	Ø70	4x Ø10 - 6 / Ø5,5	Ø60 H8	4	15	10	Ø61	Ø90	96
	Ø105	30	R14	Ø85	4x Ø11 - 7 / Ø6,6	Ø70 H8	4	22	10	Ø61	Ø90	102
	Ø120	23	R14	Ø100	4x Ø11 - 7 / Ø6,6	Ø80 H8	4	15	10	Ø61	Ø90	96
	Ø140	30	R14	Ø115	4x Ø14 - 9 /Ø9	Ø95 H8	4	22	10	Ø61	Ø90	102
M2	Ø105	23	R14	Ø85	4x Ø11 - 7 / Ø6,6	Ø70 H8	4	18	10	Ø74,5	Ø105	113,5
		30	R19/24	Ø85	4x Ø11 - 7 / Ø6,6	Ø70 H8	4	15	23	Ø74,5	Ø105	123,5
	Ø120	30	R14	Ø100	4x Ø11 - 7 / Ø6,6	Ø80 H8	4	11	10	Ø74,5	Ø105	106,5
			R19/24	Ø100	4x Ø11 - 7 / Ø6,6	Ø80 H8	4	15	23	Ø74,5	Ø105	123,5
		40	R19/24	Ø100	4x Ø11 - 7 / Ø6,6	Ø80 H8	5	25	23	Ø74,5	Ø105	133,5
	Ø140	30	R14	Ø115	4x Ø15 - 9 / Ø9	Ø95 H8	4	18	10	Ø74,5	Ø105	113,5
			R19/24	Ø115	4x Ø15 - 9 / Ø9	Ø95 H8	4	15	23	Ø74,5	Ø105	123,5
	Ø160	40	R19/24	Ø130	4x Ø15 - 9 / Ø9	Ø110 H8	5	25	23	Ø74,5	Ø105	133,5
M3	Ø105	30	R19/24	Ø85	4x Ø11 - 9 / Ø6,6	Ø70 H8	4	17	12	Ø78	Ø105	143,5
	Ø120	30	R19/24	Ø100	4x Ø11 - 8 / Ø6,6	Ø80 H8	4	16	12	Ø78	Ø105	142,5
		40	R19/24	Ø100	4x Ø11 - 12 / Ø6,6	Ø80 H8	5	29	12	Ø78	Ø105	155,5
			R24/28	Ø100	4x Ø11 - 12 / Ø6,6	Ø80 H8	5	29	12	Ø78	Ø105	155,5
	Ø140	30	R19/24	Ø115	4x Ø15 - 11 / Ø9	Ø95 H8	4	17	12	Ø78	Ø105	143,5
		50	R24/28	Ø115	4x Ø15 - 10 / Ø9	Ø95 H8	5	20	31	Ø78	Ø105	165,5
	Ø160	40	R19/24	Ø130	4x Ø15 - 14 / Ø9	Ø110 H8	5	29	12	Ø78	Ø105	155,5
			R24/28	Ø130	4x Ø15 - 14 / Ø9	Ø110 H8	5	29	12	Ø78	Ø105	155,5
		50	R24/28	Ø130	4x Ø15 - 10 / Ø9	Ø110 H8	5	20	31	Ø78	Ø105	165,5
		60	R24/28	Ø130	4x Ø15 - 15 / Ø9	Ø110 H8	5	30	31	Ø78	Ø105	165,5
	Ø200	60	R24/28	Ø165	4x Ø18 - 12 / Ø11	Ø130 H8	5	30	31	Ø78	Ø105	165,5
M4	Ø160	40	R24/28	Ø130	4x Ø15 - 10 / Ø9	Ø110 H7	5	20	15	Ø115	Ø160	178,5
			R28/38	Ø130	4x Ø15 - 15 / Ø9	Ø110 H7	5	25	15	Ø115	Ø160	183,5
		50	R24/28	Ø130	4x Ø15 - 14,5 / Ø9	Ø110 H7	5	29,5	15	Ø115	Ø160	188
			R28/38	Ø130	4x Ø15 - 14,5 / Ø9	Ø110 H7	5	34,5	15	Ø115	Ø160	193
		60	R24/28	Ø130	4x Ø15 - 10 / Ø9	Ø110 H7	5	20	34,5	Ø115	Ø160	198
			R28/38	Ø130	4x Ø15 - 15 / Ø9	Ø110 H7	5	25	34,5	Ø115	Ø160	203
	Ø200	60	R24/28	Ø165	4x Ø18 - 12 / Ø11	Ø130 H7	5	20	34,5	Ø115	Ø160	198
			R28/38	Ø165	4x Ø18 - 12 / Ø11	Ø130 H7	5	25	34,5	Ø115	Ø160	203

B

C

D

Accessories
Motor mounting flanges HSE range

Technical drawings: HSE range

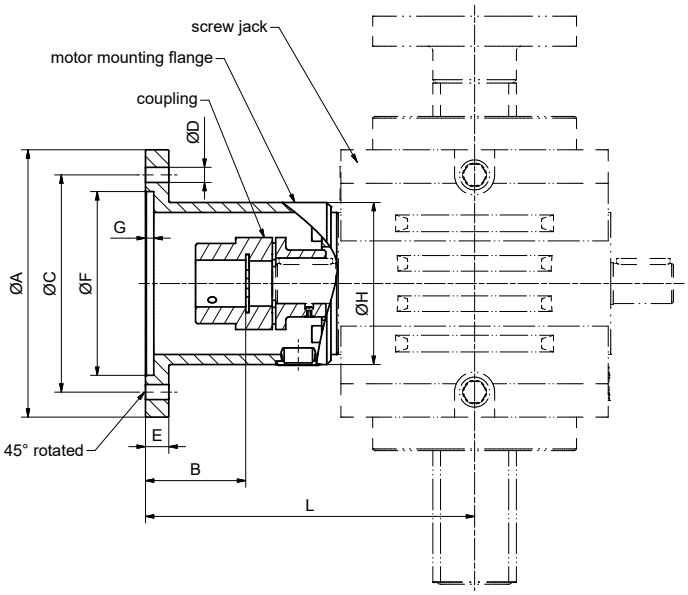

Dimensions motor mounting flanges: HSE range

Size	IEC-Flange ØA	Motor shaft length B	Coupling	Hole circle ØC	Hole ØD	Dimension E	Centering ØF	Centering depth G	Dimension ØH	Dimension L
HSE36.1	Ø90	30	R14	Ø75	4x Ø5,5	7	Ø60 H7	4	Ø65	113
	Ø105	30	R14	Ø85	4x Ø6,6	7	Ø70 H7	4	Ø74	113
	Ø140	30	R19/24*	Ø115	8x Ø9	12	Ø95 H7	4	Ø74	123
		50	R19/24	Ø115	4x Ø9	12	Ø95 H7	4	Ø74	146
HSE50.1	Ø120	30	R19/24	Ø100	4x Ø6,6	10	Ø80 H8	5	Ø72	142
		40	R19/24	Ø100	4x Ø6,6	10	Ø80 H8	5	Ø72	152
		50	R19/24	Ø100	4x Ø6,6	10	Ø80 H8	5	Ø72	162
	Ø140	40	R19/24	Ø115	4x Ø9	12,5	Ø95 H8	5	Ø72	152
		50	R19/24	Ø115	4x Ø9	12,5	Ø95 H8	5	Ø72	162
	Ø160	40	R19/24	Ø130	4x Ø9	12,5	Ø110 H8	5	Ø72	152
		50	R19/24	Ø130	8x Ø9	12,5	Ø110 H8	4,5	Ø73	162,5
HSE63.1	Ø140	40	R24/28	Ø115	4x Ø9	14	Ø95 H8	5	Ø97	177
		50	R24/28	Ø115	4x Ø9	14	Ø95 H8	5	Ø97	187
	Ø160	40	R24/28	Ø130	4x Ø9	14	Ø110 H8	5	Ø97	177
		50	R24/28	Ø130	4x Ø9	14	Ø110 H8	5	Ø97	187
		60	R24/28	Ø130	4x Ø9	14	Ø110 H8	5	Ø97	197
	Ø200	40	R24/28	Ø165	4x Ø11	14	Ø130 H8	4	Ø101	177
		50	R24/28	Ø165	4x Ø11	14	Ø130 H8	4	Ø101	187
		60	R24/28	Ø165	4x Ø11	14	Ø130 H8	4	Ø101	197
HSE80.1	Ø200	60	R28/38	Ø165	4x Ø11	15	Ø130 H8	5	Ø120	241
	Ø250	60	R28/38	Ø215	4x Ø14	15	Ø180 H7	5	Ø125	241
		80	R38/45	Ø215	4x Ø14	15	Ø180 H7	5	Ø125	265
	Ø300	80	R38/45	Ø265	4x Ø14	15	Ø230 H7	5	Ø125	265
HSE100.1	Ø200	60	R38/45	Ø165	4x Ø11	18	Ø130 H7	5	Ø150	262
	Ø250	80	R38/45	Ø215	4x Ø14	18	Ø180 H7	5	Ø150	282
	Ø300	80	R28/38	Ø265	4x Ø14	18	Ø230 H7	5	Ø150	278

*Coupling must be reworked on the hub on the gearbox side.

Accessories
Motor mounting flanges SSP range

Technical drawings: SSP range

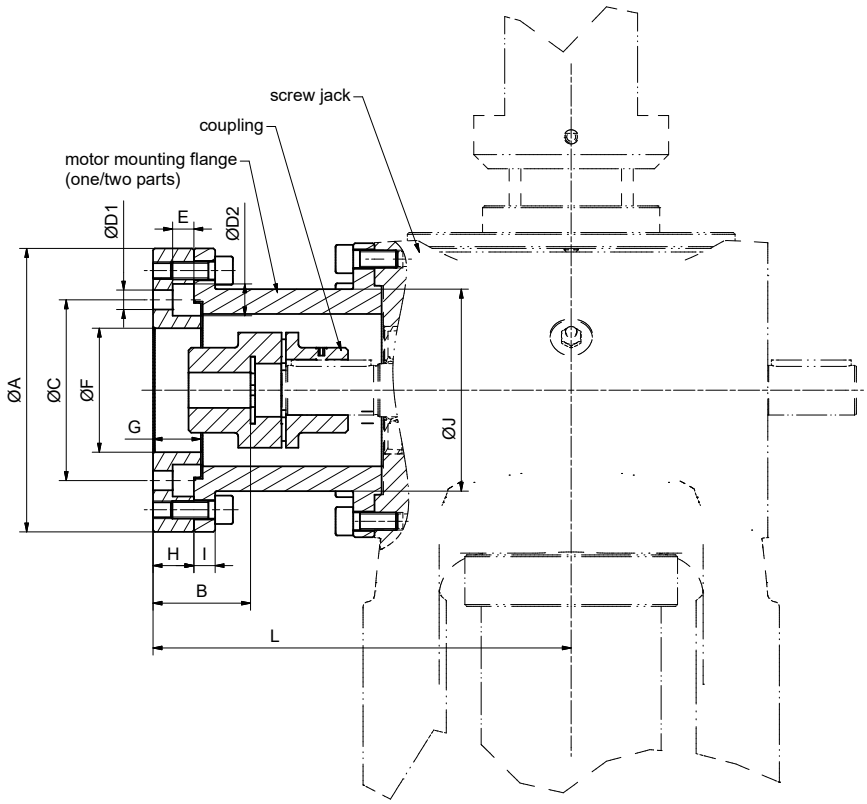

Dimensions motor mounting flanges: SSP range

Size	Drive unit	IEC-Flange ØA	Motor shaft length B	Coupling	Hole circle ØC	Hole ØD2 - E / ØD1	Centering ØF	Centering depth G	Dimension H	Dimension I	Dimension J	Dimension L
15.1	Auma SA10 G0	Ø160	55	R28/38	Ø102	4x Ø18 - 12 / Ø11	Ø60 H8	23	19	10	Ø98	215
	Auma SA10 F10	Ø160	55	R28/38	Ø102	4x Ø18 - 12 / Ø11	Ø70 H8	23	19	10	Ø98	215
	Auma SA14	Ø175	76	R38/45	Ø140	4x Ø17,5	Ø100 H7	5	14	-	Ø98	240
20.1	Auma SA10 G0	Ø160	55	R28/38	Ø102	4x Ø18 - 12 / Ø11	Ø60 H8	23	19	12	Ø114	236
	Auma SA10 F10	Ø160	55	R28/38	Ø102	4x Ø18 - 12 / Ø11	Ø70 H8	23	19	12	Ø114	236
	Auma SA14	Ø175	76	R42/55	Ø140	4x Ø17,5	Ø100 H7	15	17	-	Ø114	261
25	Auma SA14	Ø175	76	R42/55	Ø140	4x Ø17,5	Ø100 H7	20	17	-	Ø114	279,5
	Auma SA16	Ø210	97	R55/70	Ø165	4x Ø33 - 22 / Ø22	Ø130 H8	34	30	12	Ø150	304,5

Accessories
Pillow blocks

Technical drawings: Pillow blocks

The pillow block bearing to DIN 736 is complete with rolling bearing, tapered bore and adapter sleeve. The housing is equipped with a felt seal on both sides according to DIN 5419. This series is particularly suitable for intermediate support of highly flexible connecting shafts as the adapter sleeve can be fixed on the outside diameter of the tube.

To avoid distortions, only one pillow block may be implemented as a fixed bearing when more than one pillow block is used.

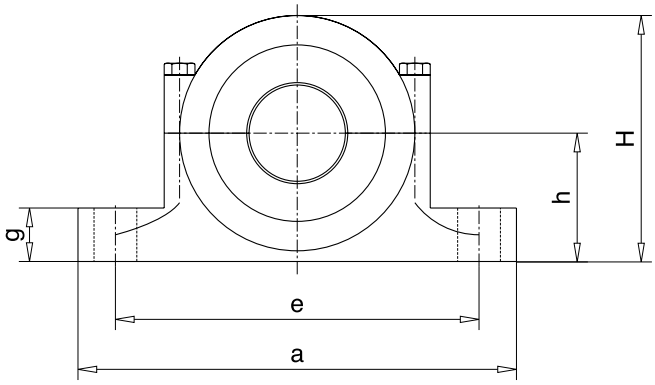

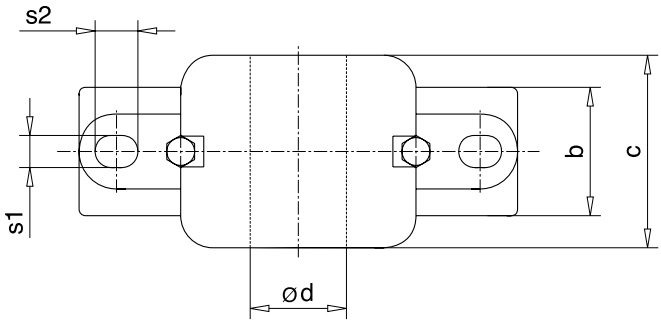

Technical drawings: Pillow blocks

Size	Ød	H	h	e	S1	S2	c	a	b	g	Weight [kg]
SN 505	20	71	40	130	15	20	67	165	46	19	1,4
SN 506	25	87	50	150	15	20	77	185	52	22	1,9
SN 507	30	92	50	150	15	20	82	185	52	22	2
SN 508	35	106	60	170	15	20	85	205	60	25	2,7
SN 509	40	115	60	170	15	20	85	205	60	25	2,9
SN 510	45	112	60	170	15	20	90	205	60	26	2,8
SN 511	50	127	70	210	18	23	95	255	68	28	4,2
SN 512	55	133	70	210	18	23	105	255	70	30	4,9
SN 513	60	148	80	230	18	23	110	275	80	30	6,1
SN 515	65	154	80	230	18	23	115	280	80	30	6,8
SN 516	70	175	95	260	22	27	120	315	90	32	9,3
SN 517	75	181	95	260	22	27	125	320	90	32	9,7
SN 518	80	192	100	290	22	27	145	345	100	35	12,8
SN 519	85	210	112	290	22	27	140	345	100	35	15
SN 520	90	215	112	320	26	32	160	380	110	40	17
SN 522	100	239	125	350	26	32	175	410	120	45	18,5
SN 524	110	271	140	350	26	32	185	410	120	45	24,5
SN 528	125	302	150	420	35	42	205	500	150	50	38

Accessories
Flange bearings

A

B

C

D

Technical drawings: Flange bearings

Flange bearings, complete with maintenance-free roller bearing from Pfaff-silberblau, are particularly suitable for radial bearing of the screw for type 2 screw jacks.

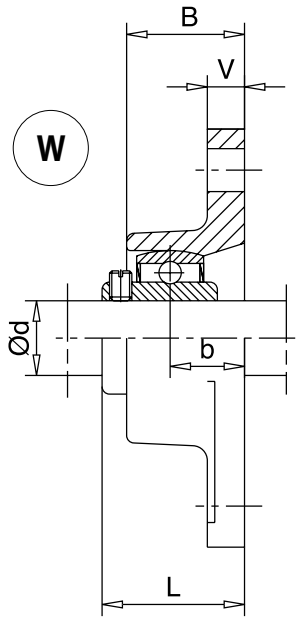

W = Standard

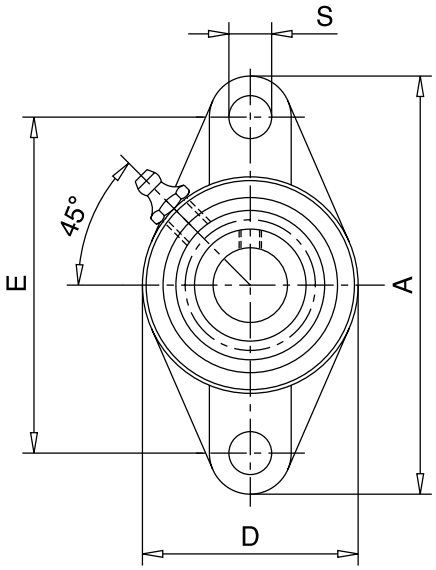

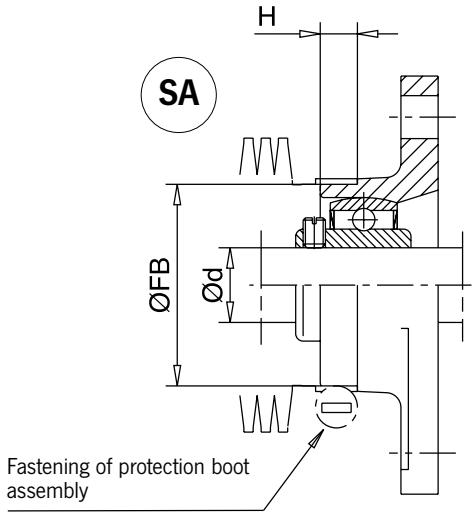

SA = with centering shoulder

Dimensions: Flange bearings

Size	Dimensions [mm]											Weight [kg]
	d	D	B	E	A	V	S	L	H*	Ø FB*	b	
OWF 12 U	12	60	25,5	90	113	11	12	33,3	12	55	15	0,49
OWF 15 U	15											
OWF 20 U	20											
OWF 25 U	25	68	27	99	130	13	16	35,7	12	65	16	0,63
OWF 30 U	30	80	31	117	148	13	16	40,2	15	75	18	0,94
OWF 35 U	35	90	34	130	161	14	16	44,4	15	85	19	1,2
OWF 40 U	40	100	36	144	175	14	16	51,2	15	95	21	1,6
OWF 45 U	45	108	38	148	188	15	19	52,2	15	100	22	1,9
OWF 50 U	50	115	40	157	197	15	19	54,6	15	110	22	2,2
OWF 60 U	60	140	48	202	250	18	23	68,7	25	135	29	4,1
OWF 80 U	80	180	59	233	290	20	25	84,3	25	175	35	7,9

* Flange bearings of the type “SA” have a centring shoulder Ø FB for customer mounting of a protection boot.

Accessories
Hand wheel and lubrication device

Technical drawing: Hand wheel

The hand wheel is designed for manual emergency operation or manual adjustment of worm gear screw jacks. Design: hand wheel according to DIN 950 with rotating ball handle (DIN 98) made of polished and anodised aluminium.

When ordering, please specify the hand wheel diameter and size (e.g.: HSE 32)

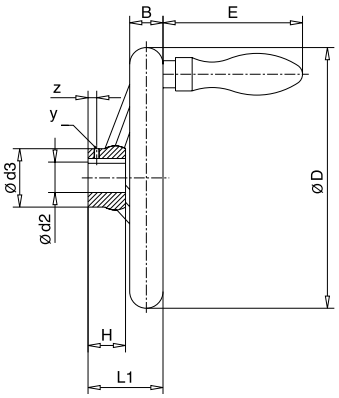

Dimensions: Hand wheel

Size	ØD	Ød2	Ød3	H	L1	B	z	y	E
SHE 0,5	80	10	24	16	29	14	6	M3	55
M 1									
SHE 1.1	125	14	28	18	36	16	9	M4	70
HSE 32									
HSE 36.1									
M 2									
SHE 3.1	160	16	32	20	40	18	9	M4	70
HSE 50.1									
M 3									
SHE 5.1	225	20	42	26	48	24	9	M4	88
M 4		20							
HSE 63.1		24							
SHE 15.1	280	25	50	30	53	26	10	M6	110
M 5		25							
HSE 80.1		32							
SHE 20.1	400	28	65	38	63	32	10	M6	125
M 6		30							
HSE 100.1		38							

Further versions on request

Technical drawing: Automatic lubricators

Automatic lubricators are filled with high-quality grease and provide continuous lubrication of the screw jack and worm gear for up to 12 months. This makes them an economical solution for reducing maintenance intervals.

Color activation screw

Color 1	Dispensing time
yellow	1 month
green	3 months
red	6 months
grey	12 months

Technical information:

- Metal housing
- Drive provided by electrochemical reaction
- At 20 °C, running times of 1, 3, 6 and 12 months are possible (the color of the activation screw 1 denotes the dispensing time)
- 120 cm^3 volume
- Maximum compression accumulation of 4 bar
- Operating temperatures ranging from 0 °C up to a maximum of +40 °C are possible

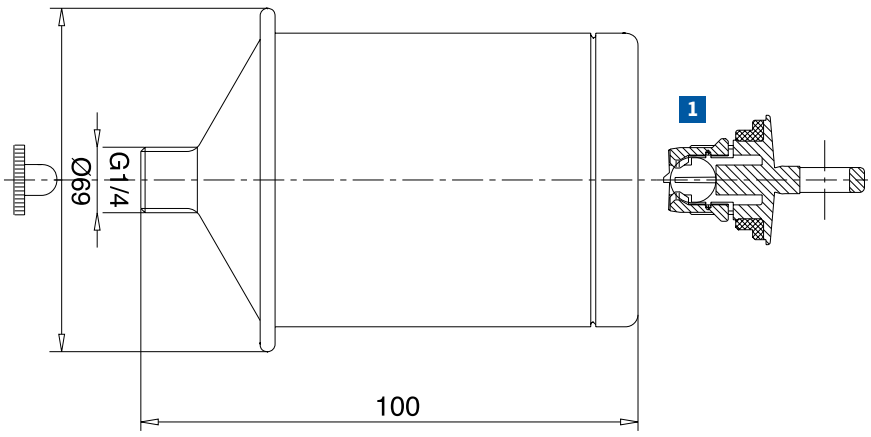

Screw jacks
Application

A

B

C

D

Reference example: Lifting system from Pfaff-silberblau for flood protection gate in the Greifswald flood barrier

The first barrage in Greifswald, inaugurated in 2015, is part of the currently the largest coastal protection project in Mecklenburg-Western Pomerania. In the event of a storm surge, it is designed to protect the city region of Greifswald and the urban district of Greifswald-Wieck against flooding, which is regarded as the most vulnerable region of the Baltic Sea on account of its exposed location. If a flood warning is issued, this involves locking the main gate of the flood barrier with the aid of a revolving segment to protect against the high tide. At the same time, the 17 m wide and some 18 t heavy sliding gates are closed on the south and north pier of the flood barrier. This involves the gates running on railway tracks based on the principle of an oversized sliding door.

This is precisely where the worm gear screw jacks from Pfaff-silberblau come in. In the event of an emergency and also for maintenance purposes, each sliding gate has to be lifted from its parking position in the sliding gate chambers in the dams via a rocker with travel wheel by up to 150 mm and lowered safely onto the rail. The wheel is lifted with a lifting speed of 0.05 m/min by means of an electromechanical drive unit designed and delivered by Pfaff-silberblau specifically for this application

A worm gear screw jack of the SHE 25 ranges from Pfaff-silberblau with a rotating and self-locking trapezoidal screw, special travelling nut, absolute encoder, special grease and a bevel gear box motor with 1.5 kW actuating power is used. In case of an emergency, the drive unit also features a hand wheel at the motor.

Specifically for this outdoor maritime application, the screw is protected by a special flexible protection boot. The electrical components are designed in compliance with protection class IP66. All the other driving elements are also made from weatherproof materials and are protected with high-quality special paint in compliance with corrosiveness category C5M as defined by DIN EN ISO 12944. Thanks to this special design, the drive solution from Pfaff-silberblau qualifies for outdoor use in coastal areas and a temperature range of -20°C to +50°C.

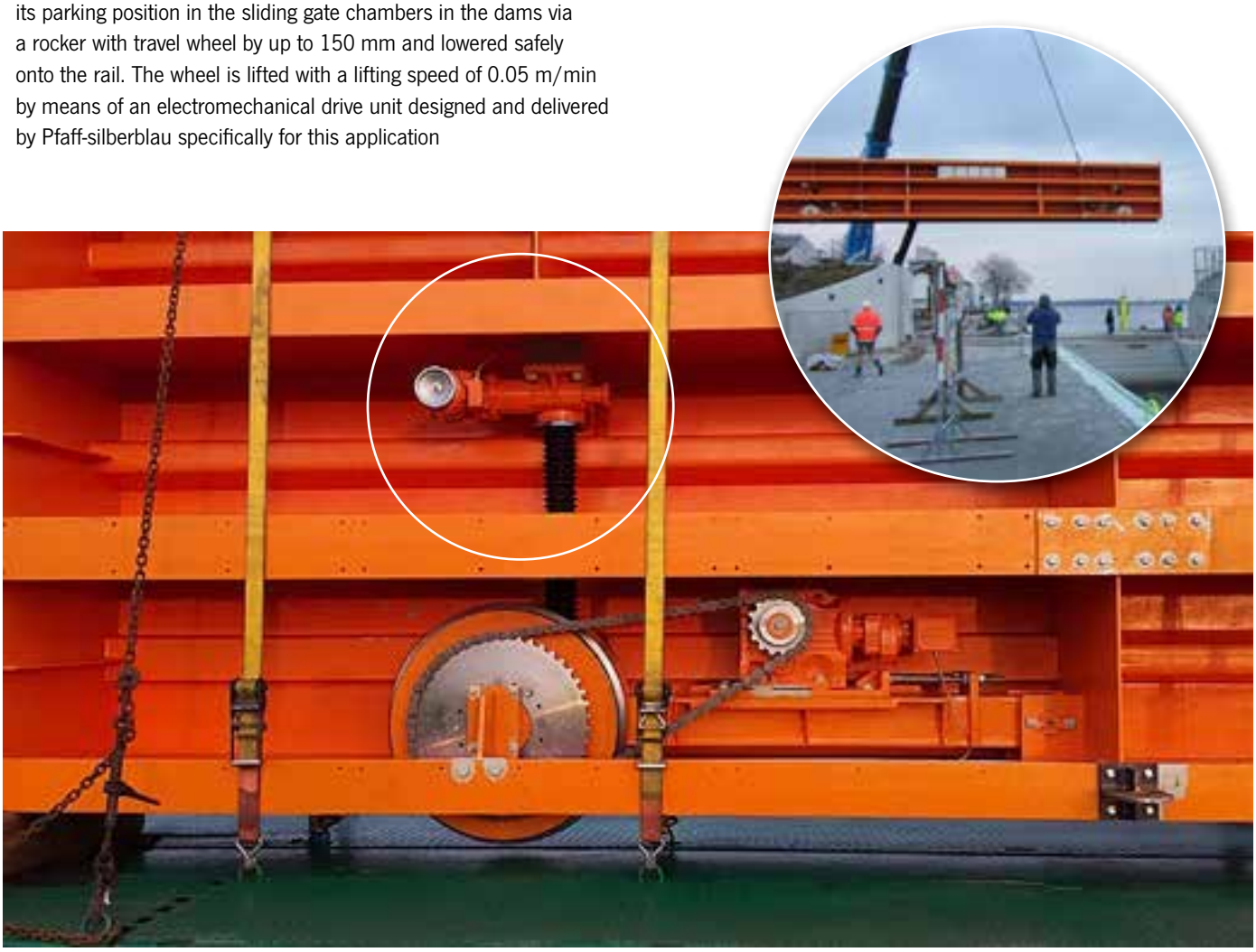

Fig. 1: Close-up view of the gate with the SHE 25 from Pfaff-silberblau for adjusting the travel wheel (copyright: ARGE HPI/hpl Greifswald
Circular image: Detailed view of the gate with the SHE 25 from Pfaff-silberblau for adjusting the impeller (Image rights: ARGE HPI/hpl Greifswald)

Accessories
Mechanical limit switches

Technical drawings: Mechanical limit switches

Limit switches in enclosed configuration for normal and emergency shut-off of the worm gear or on the on-site structure

Position of limit switches on screw jack:

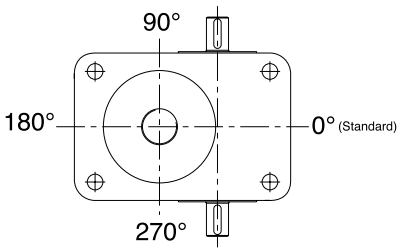

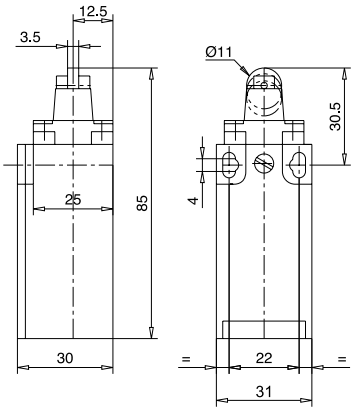

XCK-P 2102 P16

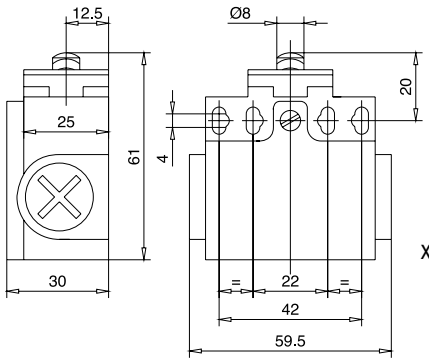

XCK-T 2110 P16

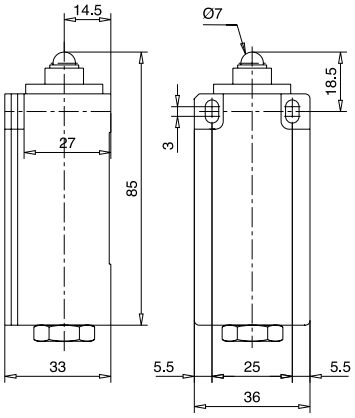

GC SU 1ZW

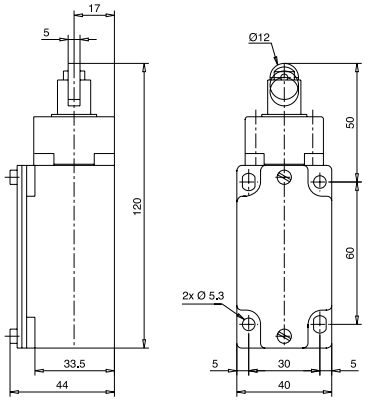

XCK-J 567 H29

Technical data: Mechanical limit switches

Type	XCK-_ ___	GC SU 1ZW
Design	Enclosed in plastic (or metal)	Enclosed in metal
Ambient temperature	-25° to +70 °C	-30° to +80 °C
Protection rating	IP 66	IP 65
Line entrance	ISO, M16 x 1,5 (M20 x 1,5)	ISO, M20 x 1,5
Short-circuit protection	10A	10A
Auxiliary switch inserts	Single-circuit change-over contact open/close with (without) jumper function and forced opening of break contact	Single-circuit change-over contact open/close with jumper function and forced opening of break contact

() Values in brackets apply to XCK-J

Accessories
Inductive limit switches

A

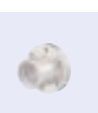

Technical drawings: Inductive limit switches

Inductive limit switches can also be used for rotation or standstill monitoring purposes on the worm gear screw jack.

Design with plug connection

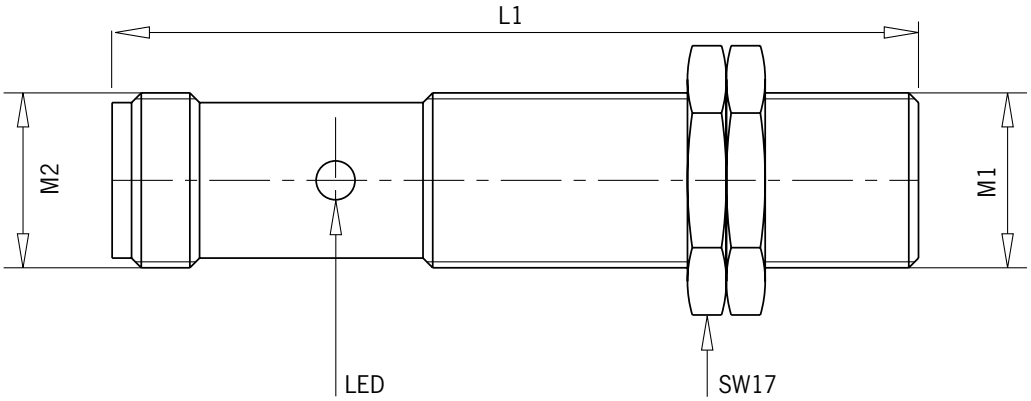

Design with connection cable

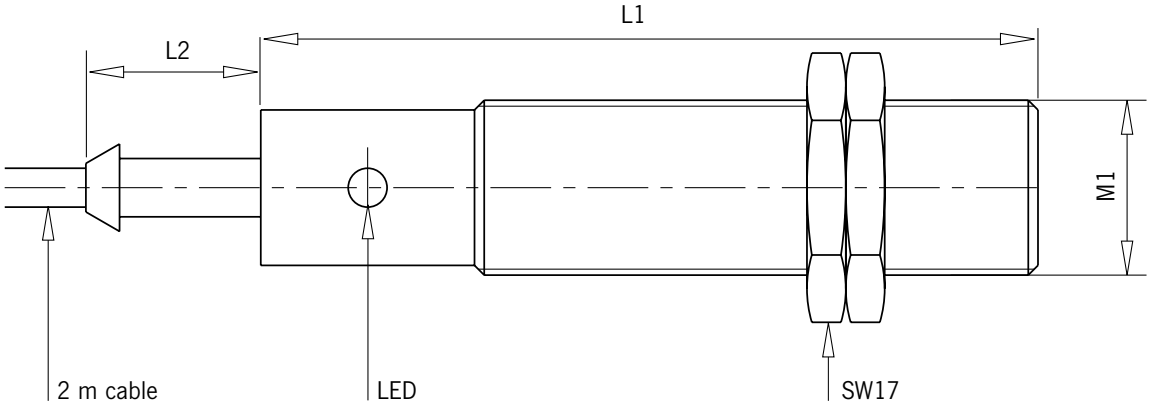

B

Technical data: Inductive limit switches

Type	IFM 216	IF 0006	IG 0093
Connection	Plug connection	PVC cable	PVC cable
Cable socket groups	EVM004 /2m -4 x0,34 mm²	2 m / 2x0,5 mm²	2 m / 2x0,5 mm²
Operating voltage	10 - 60 VDC	20 - 250 VAC	20 - 250 AC/DC
Electrical version	PNP / NPN	-	-
Output function	opening contact	opening contact	opening contact
Current carrying capacity	200 mA	250 mA	250 mA (AC) - 100mA (DC)
Switching distance	4 mm	2 mm	5 mm
Type of installation	flush mountable	flush mountable	flush mountable
Connection thread M1/M2	M 12/M 12	M 12	M 18
Length L1/L2	70 mm	71,5 mm/20 mm	80 mm/18 mm
Display switching state	LED - yellow	LED - yellow	LED - yellow
Protection rating	IP67, IP 69 K	IP67	IP67
Ambient temperature	-40° to +85 C°	-25° to +80 °C	-25° to +80 °C

Dimensional drawing and further technical data on request

C

D

Accessories
Control units

Technical information: Control units

Conventional contactor control and – on request – complete PLC control systems available from Columbus McKinnon.

Contactor control system

- For lifting systems/linear actuators with three-phase motors (~ 400 V) – conforming to European Standard DIN-EN-60204 Part 1, Part 32.

H1TM basic version

- Protection rating IP 54
- Housing made of plastic (270 x 220 x 108 mm)
- Operating voltage ~ 400 V 50 Hz
- Control system voltage ~ 42 V 50 Hz
- Motor protection relay
- „UP/DOWN“ push-button control
- Signals from the limit switches can be processed
- Built-in „EMERGENCY OFF“ master switch and reversal protection

H1TM with external push-button controls and main contactor

- With wall-mounted „UP/DOWN“ and „EMERGENCY OFF“ push-buttons (supplied in separate package) **or**
- With „UP/DOWN“ and „EMERGENCY OFF“ pendant switches (incl. 5 m control cable)

H1TM with electronic overload protection
(required for lifting devices from loads of 1000 kg)

- With main contactor
- Overload relay
- Key-operated „reset“ control
- Fault-warning light

Technical data: Control units

Type H1TM	Motor power rating up to kW
Basic version	4,0
With external wall-mounted push-button	4,0
With external pendant switch	4,0
With electrical overload protection	4,0
With external wall-mounted push-button and electrical overload protection	4,0
With external pendant switch and electrical overload protection	4,0

Available in AC version and DC versions on request

Bevel gear boxes

With Pfaff-silberblau, you can design the drive to perfectly match machinery directives and your own requirements.

In the system, the structurally high-quality bevel gearboxes – in addition to hoist drives, connecting shafts, motor, etc. – make their important contribution.

Bevel gear boxes
Bevel gear box range

K...13 range

4 Size: K 5.13 to KV 60.13

Max. output torque up to 700 Nm

Ratios K 5.13 - K 25.13: 1:1, 2:1, 3:1

Ratios KV 60.13: 1:1, 1,5:1, 2:1, 3:1, 4:1 and 5:1

- For multi-screw lifting systems
- Efficient design, with cast-on base strips
- Cast housing with prime coated surface

KA and KV range

9 Size: KA 1 to KA 35 and KV 90 to KV 550

Max. output torque up to 8500 Nm

Ratios: 1:1, 1,5:1, 2:1, 3:1, 4:1, 5:1 and 6:1

- Hardened, paired, lapped helical tooth pattern
- Cubic, all-round machined symmetrical housing
- All-round fixing holes
- Mounting brackets available as accessories
- Configuration available with output-side hollow shaft
- Configuration available with input-side hollow shaft and IEC flange (rectangular flange available on request)
- Cast housing with prime coated surface
- Corrosion-resistant configuration available (single components up to entire transmission system can be supplied in „all stainless-steel configuration“)
- Can be used without change for faster ratio (up to i = 2:1)

Bevel gear boxes
Technical Information

Project planning bevel gear boxes							
Range	Max. operating torque T_{zul} [Nm]	Thermal load limit P_{Grenz} [kW] (at 20 % ED/h and 20 °C)	Possible ratios	Type of gearing design	Housing material	Average oil filling capacity [l]	Drive system weight (with oil filling) [kg]
K 5.13	Table page 133	4,5	1:1	Helical gear teeth	EN-GJL-200	0,2	5,3
K 11.13	Table page 133	8,5	2:1			0,5	8
K 25.13	Table page 133	16	3:1			1	24
KV 60.13	Table page 133	43	1:1	Helical gear teeth	EN-GJL-250	2	55
			1,5:1				
			2:1				
			3:1				
			4:1				
			5:1				
KA 1	Table page 134	2,5	1:1 1,5:1 2:1 3:1 4:1 5:1 6:1	Helical gear teeth	EN-GJL-200	0,1	2
KA 5	Table page 134	8				0,2	6
KA 9	Table page 134	11,5				0,3	10
KA 18	Table page 134	20				0,4	20
KA 35	Table page 134	28				1	32
KV 90	Table page 135	56		Helical gear teeth	EN-GJL-250	2,5	70
KV 120	Table page 135	79			EN-GJL-400-15	5	100
KV 260	Table page 135	126				13,5	200
KV 550	Table page 135	155				30	400

Dimensioning

Gear dimensioning: The **values shown in the table apply to 20 % ED/h and 20 °C ambient temperature.**

We will be pleased to advise you in the case of deviating operating conditions.

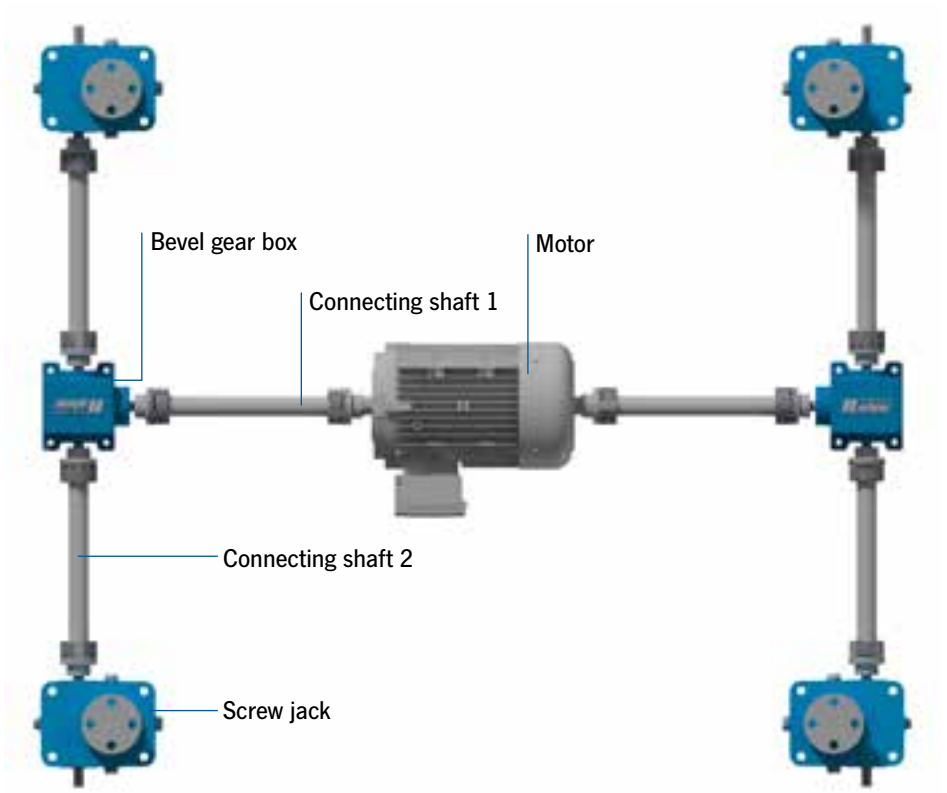

Schematic view 4:1 with three-phase motor and bevel gear box i = 1:1

Bevel gear boxes

Performance tables: K 5.13 to KV 60.13 range

Input speed	Output speed	K 5.13		K 11.13		K 25.13		KV 60.13	
		Drive power	Output torque	Drive power	Output torque	Drive power	Output torque	Drive power	Output torque
		P_1	T_2	P_1	T_2	P_1	T_2	P_1	T_2
n_1 [min-1]	n_2 [min-1]	[kW]	[Nm]	[kW]	[Nm]	[kW]	[Nm]	[kW]	[Nm]
Ratio 1:1									
50	50	0,2	42	0,4	75	1,2	230	3,7	700
250	250	1,0	38	1,8	69	5,3	202	15,2	580
500	500	1,9	36	3,2	61	10,0	191	26,2	500
750	750	3,0	38	4,8	61	14,0	178	34,6	440
1000	1000	3,7	35	6,0	57	17,5	167	42,9	410
1500	1500	4,3	27	8,2	52	26,0	166	55,0	350
3000	3000	8,0	25	15,0	48	40,0	127	69,1	220
Ratio 1.5:1									
50	33,33	-	-	-	-	-	-	2,4	700
250	166,67	-	-	-	-	-	-	10,6	610
500	333,33	-	-	-	-	-	-	18,9	540
750	500	-	-	-	-	-	-	25,9	495
1000	666,67	-	-	-	-	-	-	32,8	470
1500	1000	-	-	-	-	-	-	43,0	410
3000	2000	-	-	-	-	-	-	62,8	300
Ratio 2:1									
50	25	0,1	48	0,2	82	0,7	250	1,8	700
250	125	0,6	48	1,1	80	3,2	244	8,4	640
500	250	1,1	42	1,8	69	5,5	210	15,2	580
750	375	1,6	41	2,6	66	7,5	191	20,7	526
1000	500	2,0	38	3,3	63	9,8	187	26,2	500
1500	750	3,3	42	4,8	61	14,0	178	35,3	450
3000	1500	4,5	29	8,5	54	26,0	166	55,0	350
Ratio 3:1									
50	16,67	0,1	48	0,2	90	0,5	260	0,9	500
250	83,33	0,4	48	0,8	87	2,2	252	4,0	460
500	166,67	0,8	48	1,3	74	4,1	235	7,3	420
750	250	1,2	44	1,8	69	5,7	218	9,95	380
1000	333,33	1,6	44	2,4	69	6,6	189	12,6	360
1500	500	2,2	42	3,4	65	10,0	191	16,2	310
3000	1000	3,9	37	6,1	58	18,0	172	25,1	240
Ratio 4:1									
50	12,5	-	-	-	-	-	-	0,6	480
250	62,5	-	-	-	-	-	-	2,8	430
500	125	-	-	-	-	-	-	5,3	400
750	187,5	-	-	-	-	-	-	7,4	375
1000	250	-	-	-	-	-	-	9,4	360
1500	375	-	-	-	-	-	-	12,6	320
3000	750	-	-	-	-	-	-	18,9	240
Ratio 5:1									
50	10	-	-	-	-	-	-	0,5	520
250	50	-	-	-	-	-	-	2,5	480
500	100	-	-	-	-	-	-	4,7	450
750	150	-	-	-	-	-	-	6,6	420
1000	200	-	-	-	-	-	-	8,4	400
1500	300	-	-	-	-	-	-	11,6	370

Bevel gear boxes
Performance tables: KA 1 to KA 35 range

A

B

C

D

Performance tables: KA 1 to KA 35 range

Input speed	Output speed	KA 1		KA 5		KA 9		KA 18		KA 35	
		Drive power	Output torque	Drive power	Output torque	Drive power	Output torque	Drive power	Output torque	Drive power	Output torque
		P_1	T_2	P_1	T_2	P_1	T_2	P_1	T_2	P_1	T_2
n_1 [min-1]	n_2 [min-1]	[kW]	[Nm]	[kW]	[Nm]	[kW]	[Nm]	[kW]	[Nm]	[kW]	[Nm]
Ratio 1:1											
50	50	0,09	18	0,26	50	0,68	130	1,05	200	1,68	320
250	250	0,47	18	1,28	49	3,14	120	4,71	180	7,85	300
500	500	0,89	17	2,41	46	5,76	110	8,90	170	14,14	270
1000	1000	1,68	16	4,4	42	9,42	90	15,71	150	23,04	220
1500	1500	2,2	14	5,81	37	12,88	82	20,42	130	28,27	180
2000	2000	2,51	12	6,91	33	12,29	73	25,13	120	35,60	170
3000	3000	3,14	10	8,8	28	18,85	60	28,27	90	40,84	130
Ratio 1.5:1											
50	33,33	0,06	18	0,17	50	0,45	130	0,70	200	1,12	320
250	166,67	0,31	18	0,86	49	2,09	120	3,32	190	5,41	310
500	333,33	0,59	17	1,68	48	3,84	110	6,28	180	10,12	290
1000	666,67	1,12	16	3,07	44	6,98	100	11,17	160	18,15	260
1500	1000	1,57	15	4,19	40	9,42	90	15,71	150	23,04	220
2000	1333,33	1,95	14	5,31	38	11,87	85	19,55	140	27,92	200
3000	2000	2,51	12	6,91	33	15,29	73	25,13	120	35,60	170
Ratio 2:1											
50	25	0,05	18	0,13	50	0,34	130	0,52	200	0,84	320
250	125	0,24	18	0,64	49	1,64	125	2,49	190	4,06	310
500	250	0,47	18	1,26	48	3,14	120	4,71	180	7,85	300
1000	500	0,89	17	2,36	45	5,76	110	8,90	170	14,14	270
1500	750	1,26	16	3,38	43	7,85	100	12,57	160	19,63	250
2000	1000	1,57	15	4,19	40	9,42	90	15,71	150	23,04	220
3000	1500	2,2	14	5,81	37	12,88	82	20,42	130	28,27	180
Ratio 3:1											
50	16,67	0,03	16	0,07	40	0,17	95	0,31	175	0,51	290
250	83,33	0,13	15	0,34	39	0,77	88	1,48	170	2,27	260
500	166,67	0,26	15	0,66	38	1,47	84	2,79	160	4,19	240
1000	333,33	0,49	14	1,29	37	2,62	75	5,24	150	6,98	200
1500	500	0,68	13	1,83	35	3,51	67	6,81	130	9,42	180
2000	666,67	0,84	12	2,23	32	4,54	65	8,38	120	11,87	170
3000	1000	1,15	11	2,93	28	5,45	52	10,47	100	15,71	150
Ratio 4:1											
50	12,5	-	-	0,05	38	0,12	95	0,23	175	0,37	280
250	62,5	-	-	0,25	38	0,60	92	1,11	170	1,77	270
500	125	-	-	0,48	37	1,15	88	2,16	165	3,14	240
1000	250	-	-	0,92	35	2,09	80	3,93	150	5,50	210
1500	375	-	-	1,34	34	2,91	74	5,50	140	7,46	190
2000	500	-	-	1,62	31	3,56	68	6,81	130	9,16	175
3000	750	-	-	2,28	29	4,71	60	7,85	100	12,57	160
Ratio 5:1											
50	10	-	-	0,04	38	0,10	95	0,18	175	0,27	260
250	50	-	-	0,19	37	0,48	92	0,89	170	1,31	250
500	100	-	-	0,37	35	0,92	88	1,68	160	2,41	230
1000	200	-	-	0,69	33	1,68	80	2,93	140	4,19	200
1500	300	-	-	0,94	30	2,29	73	3,77	120	5,81	185
2000	400	-	-	1,17	28	2,85	68	4,61	110	7,54	180
3000	600	-	-	1,70	27	3,77	60	6,28	100	10,05	160
Ratio 6:1											
50	8,33	-	-	0,03	32	0,06	74	-	-	0,18	210
250	41,67	-	-	0,14	31	0,31	70	-	-	0,87	200
500	83,33	-	-	0,26	30	0,60	69	-	-	1,66	190
1000	166,67	-	-	0,51	29	1,19	68	-	-	3,23	185
1500	250	-	-	0,73	28	1,68	64	-	-	4,45	170
2000	333,33	-	-	0,94	27	2,09	60	-	-	5,58	160
3000	500	-	-	1,36	26	2,72	52	-	-	7,85	150

Bevel gear boxes
Performance tables: KV 90 to KV 550 range

Performance tables: KV 90 to KV 550 range									
Input speed	Output speed	KV 90		KV 120		KV 260		KV 550	
		Drive power	Output torque	Drive power	Output torque	Drive power	Output torque	Drive power	Output torque
		P_1	T_2	P_1	T_2	P_1	T_2	P_1	T_2
n_1 [min-1]	n_2 [min-1]	[kW]	[Nm]	[kW]	[Nm]	[kW]	[Nm]	[kW]	[Nm]
Ratio 1:1									
50	50	6,54	1250	9,16	1750	23,04	4400	40,84	7800
250	250	24,87	950	36,65	1400	89,01	3400	154,45	5900
500	500	41,88	800	62,83	1200	146,60	2800	261,78	5000
1000	1000	67,02	640	94,24	900	198,95	1900	418,85	4000
1500	1500	81,68	520	116,23	740	251,31	1600	549,74	3400
2000	2000	92,15	440	127,75	610	-	-	-	-
3000	3000	100,52	320	138,22	440	-	-	-	-
Ratio 1.5:1									
50	33,33	4,54	1300	6,28	1800	15,71	4500	27,92	8000
250	166,67	19,20	1100	26,18	1500	64,57	3700	113,44	6500
500	333,33	31,41	900	45,38	1300	108,20	3100	188,48	5400
1000	666,67	52,36	750	76,79	1100	181,50	2600	328,10	4700
1500	1000	67,02	640	94,24	900	198,95	1900	418,85	4000
2000	1333,33	79,58	570	110,30	790	237,35	1700	516,58	3700
3000	2000	92,15	440	127,75	610	-	-	-	-
Ratio 2:1									
50	25	3,40	1300	4,71	1800	12,04	4600	21,47	8200
250	125	15,71	1200	20,94	1600	51,05	3900	90,31	6900
500	250	24,87	950	36,65	1400	89,01	3400	154,45	5900
1000	500	41,88	800	62,83	1200	146,60	2800	261,78	5000
1500	750	54,97	700	78,53	1000	188,48	2400	353,40	4500
2000	1000	67,02	640	94,24	900	198,95	1900	418,85	4000
3000	1500	81,68	520	116,23	740	251,31	1600	549,74	3500
Ratio 3:1									
50	16,67	1,52	870	2,97	1700	7,33	4200	14,83	8200
250	83,33	7,07	810	12,22	1400	32,29	3700	63,70	7300
500	166,67	13,09	750	21,82	1250	55,85	3200	109,95	6300
1000	333,33	21,64	620	34,21	980	90,75	2600	184,99	5300
1500	500	27,25	530	43,98	840	115,18	2200	240,84	4600
2000	666,67	33,51	480	53,05	760	132,64	1900	293,19	4200
3000	1000	40,84	390	62,83	600	178,01	1700	366,49	3500
Ratio 4:1									
50	12,5	1,26	960	2,09	1600	3,93	3000	11,13	8500
250	62,5	5,56	850	9,82	1500	18,32	2800	51,05	7800
500	125	10,21	780	17,67	1350	32,72	2500	91,62	7000
1000	250	17,28	660	30,10	1150	54,97	2100	159,69	6100
1500	375	23,17	590	38,48	980	74,61	1900	223,82	5700
2000	500	27,23	520	45,55	870	94,24	1800	261,78	5000
3000	750	33,77	430	54,97	700	125,65	1600	337,70	4300
Ratio 5:1									
50	10	1,02	970	1,57	1500	3,35	3200	7,54	7200
250	50	4,71	900	7,33	1400	15,18	2900	33,51	6400
500	100	8,48	810	13,61	1300	25,13	2400	60,73	5800
1000	200	14,66	700	23,04	1100	39,79	1900	104,71	5000
1500	300	19,48	620	29,84	950	53,40	1700	135,08	4300
2000	400	23,46	560	35,60	850	67,02	1600	159,16	3800
3000	600	31,41	500	46,49	740	81,68	1300	201,05	3200
Ratio 6:1									
50	8,33	0,53	610	0,87	1000	1,83	2100	5,41	6200
250	41,67	2,62	600	4,28	980	8,73	2000	25,31	5800
500	83,33	5,06	580	7,68	880	15,71	1800	45,38	5200
1000	166,67	9,25	530	13,61	780	29,67	1700	80,28	4600
1500	250	12,57	480	17,80	680	39,27	1500	104,71	4000
2000	333,33	15,01	430	20,94	600	48,87	1400	132,64	3800
3000	500	18,85	360	26,18	500	57,59	1100	167,54	3200

Bevel gear boxes
K...13 range

Technical drawings: K...13 range

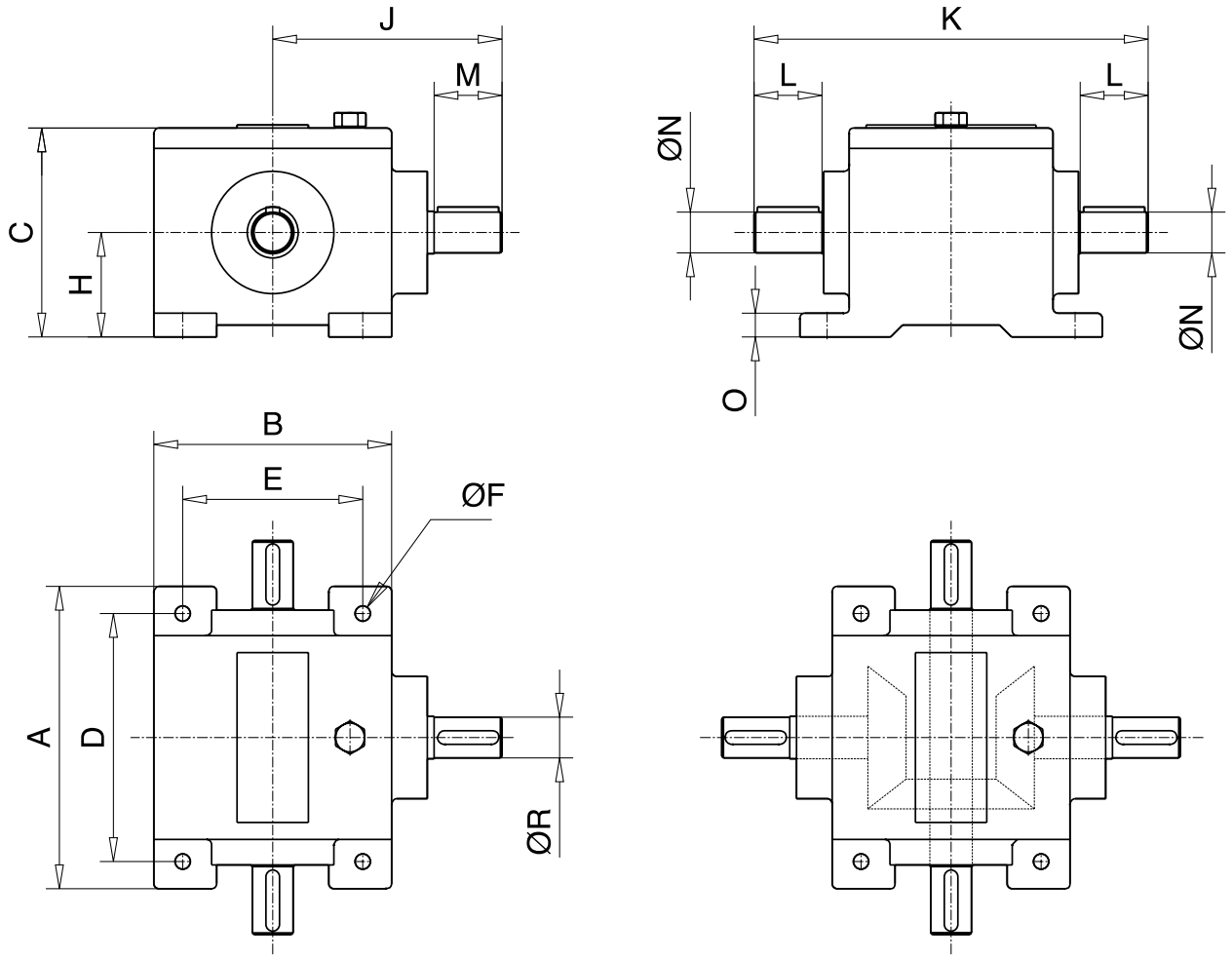

Only the most recent dimension plans are binding.

Dimensions: K...13 range

Size	K 5.13	K 11.13	K 25.13	KV 60.13			
Ratio	1:1, 2:1, 3:1	1:1, 2:1, 3:1	1:1, 2:1, 3:1	1:1, 1,5:1, 2:1	3:1	4:1	5:1
A	135	178	230	300	300	300	300
B	110	140	230	210	210	210	210
C	105	123	152	202	202	202	202
D	110	146	195	270	270	270	270
E	85	106	195	170	170	170	170
Ø F	9	9	11	13	13	13	13
H	52,5	61,5	70	102	102	102	102
J	110	135	223	273	261	261	248
K	170	232	356	406	406	406	406
L	28	40	80	80	80	80	80
M	30	40	80	80	68	68	55
Ø N	16_{j5}	24_{k6}	30_{k6}	42_{j6}	42_{j6}	42_{j6}	42_{j6}
O	12	14	15	15	15	15	15
Ø R	16_{j5}	24_{k6}	30_{k6}	42_{j6}	35_{j6}	35_{j6}	28_{j6}

Feather keys and grooves: DIN 6885 Page 1.

Bevel gear boxes
KA and KV range

Technical drawings: KA and KV range

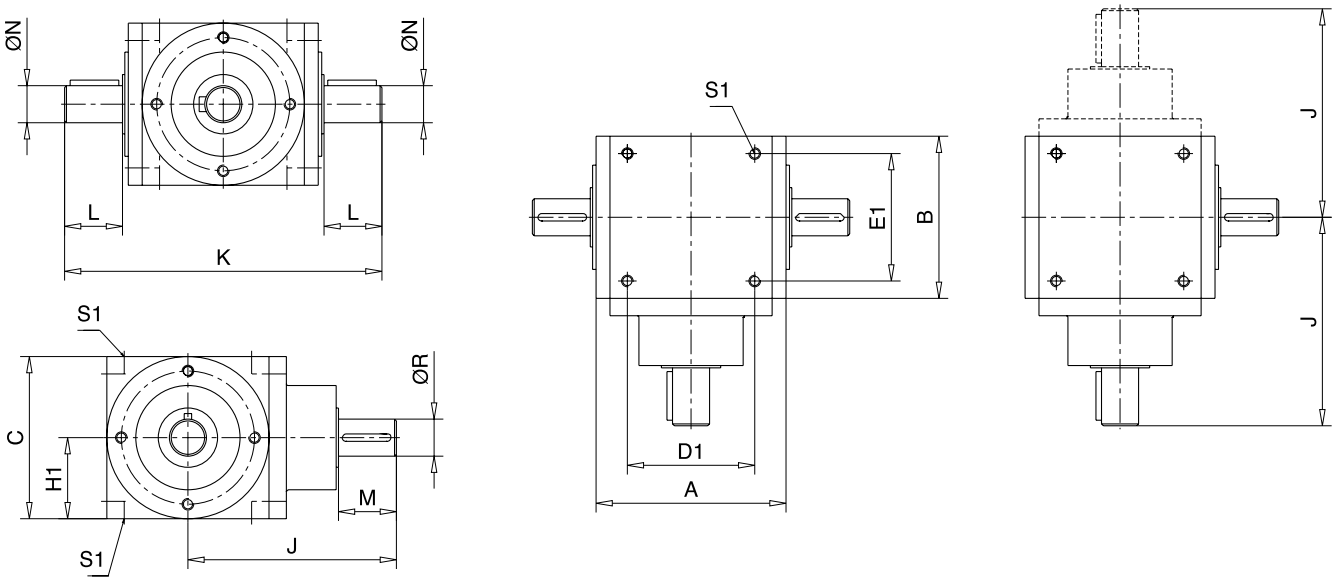

Only the most recent dimension plans are binding.

Dimensions: KA 1 and KA 5 range

Size	KA 1				KA 5			
Ratio	1:1 / 1,5:1 / 2:1	3:1	4:1	5:1 / 6:1	1:1 / 1,5:1 / 2:1	3:1	4:1	5:1 / 6:1
A	84	84	-	-	110	110	110	110
B	65	65	-	-	90	90	90	90
C	65	65	-	-	90	90	90	90
$D1^{\pm 0,2}$	45	45	-	-	70	70	70	70
$E1^{\pm 0,2}$	45	45	-	-	70	70	70	70
H1	32,5	32,5	-	-	45	45	45	45
J	100	100	-	-	122	122	132	132
K	144	144	-	-	190	190	190	190
L	26	26	-	-	35	35	35	35
M	26	26	-	-	35	35	35	35
Ø N_{j6}	12	12	-	-	18	18	18	18
Ø R_{j6}	12	12	-	-	18	12	12	12
S1	M6x12	M6x12	-	-	M8x14	M8x14	M8x14	M8x14

Dimensions: KA 9 and KA 18 range

Size	KA 9				KA 18			
Ratio	1:1 / 1,5:1 / 2:1	3:1	4:1	5:1 / 6:1	1:1 / 1,5:1 / 2:1	3:1	4:1	5:1 / 6:1
A	144	144	144	144	164	164	164	164
B	120	120	120	120	140	140	140	140
C	120	120	120	120	140	140	140	140
$D1^{\pm 0,2}$	100	100	100	100	110	110	110	110
$E1^{\pm 0,2}$	100	100	100	100	110	110	110	110
H1	60	60	60	60	70	70	70	70
J	162	162	172	162	180	180	195	195
K	244	244	244	244	274	274	274	274
L	45	45	45	45	50	50	50	50
M	45	45	45	35	50	50	50	50
Ø N_{j6}	25	25	25	25	32	32	32	32
Ø R_{j6}	25	20	20	15	32	28	24	24
S1	M10x16	M10x16	M10x16	M10x16	M10x20	M10x20	M10x20	M10x20

Shaft adapters: j6, Shaft center holes: DIN 332 Page 2, Feather keys and grooves: DIN 6885 Page 1

Bevel gear boxes
KA and KV range

A

B

C

D

Technical drawings: KA and KV range

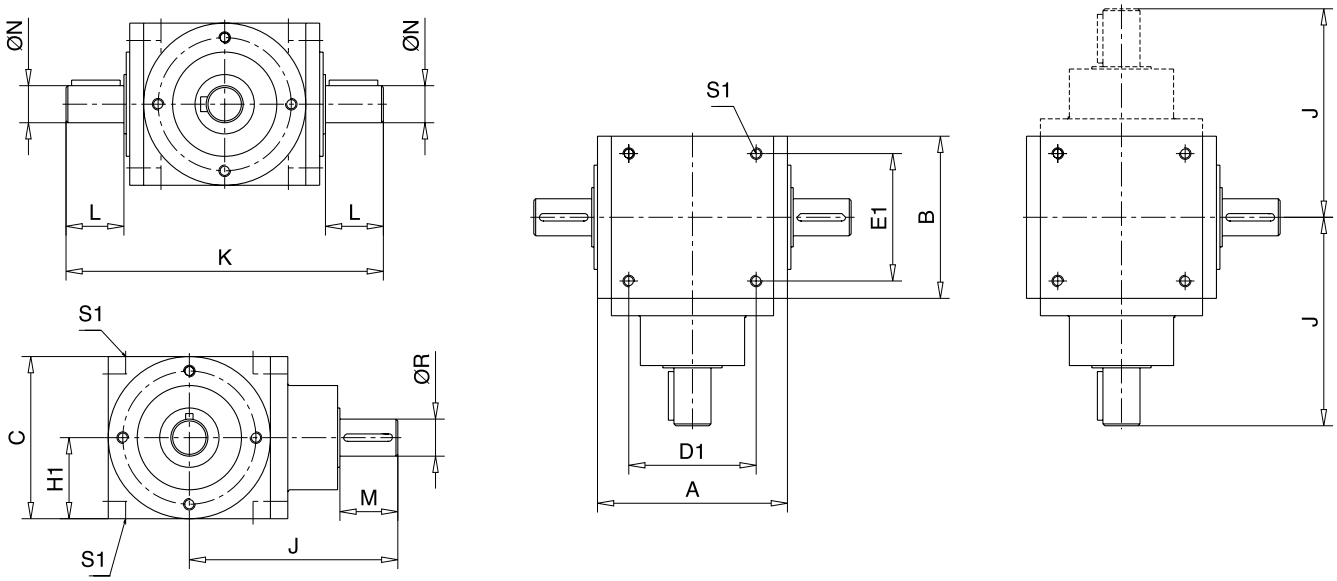

Only the most recent dimension plans are binding.

Dimensions: KA 35 and KA 90 range

Size	KA 35				KA 90			
Ratio	1:1 / 1,5:1 / 2:1	3:1	4:1	5:1 / 6:1	1:1 / 1,5:1 / 2:1	3:1	4:1	5:1 / 6:1
A	190	190	190	190	264	264	264	264
B	160	160	160	160	230	230	230	230
C	160	160	160	160	230	230	230	230
$D1^{\pm 0,2}$	120	120	120	120	180	180	180	180
$E1^{\pm 0,2}$	120	120	120	120	180	180	180	180
H1	80	80	80	80	115	115	115	115
J	212	212	232	232	305	310	310	300
K	320	320	320	320	460	460	460	460
L	60	60	60	60	90	90	90	90
M	60	60	60	60	90	80	80	70
Ø N_{j6}	35	35	35	35	55	55	55	55
Ø R_{j6}	35	28	24	24	55	40	40	35
S1	M12x24	M12x24	M12x24	M12x24	M16x32	M16x32	M16x32	M16x32

Dimensions: KV 120, KV 260 and KV 550 range

Size	KV 120				KV 260				KV 550				
Ratio	1:1 1,5:1 2:1	3:1	4:1	5:1 6:1	1:1 1,5:1 2:1	3:1	4:1	5:1 6:1	1:1 1,5:1 2:1	3:1	4:1	5:1	6:1
A	300	300	300	300	402	402	402	402	490	490	490	490	490
B	260	260	260	260	350	350	350	350	450	450	450	450	450
C	260	260	260	260	350	350	350	350	450	450	450	450	450
$D1^{\pm 0,2}$	220	220	220	220	285	285	285	285	360	360	360	360	360
$E1^{\pm 0,2}$	220	220	220	220	285	285	285	285	360	360	360	360	360
H1	130	130	130	130	175	175	175	175	225	225	225	225	225
J	380	360	360	360	570	540	540	510	600	570	570	530	540
K	570	570	570	570	820	820	820	820	940	940	940	940	940
L	110	110	110	110	170	170	170	170	150	150	150	150	150
M	110	90	90	90	170	140	140	110	150	120	120	110	110
Ø N_{j6}	60	60	60	60	80	80	80	80	90	90	90	90	90
Ø R_{j6}	60	50	50	45	80	65	65	55	90	75	75	60	60
S1	M16x32	M16x32	M16x32	M16x32	M20x40	M20x40	M20x40	M20x40	M20x40	M20x40	M20x40	M20x40	M20x40

Shaft adapters: j6, Shaft center holes: DIN 332 Page 2, Feather keys and grooves: DIN 6885 Page 1

Bevel gear boxes
KA...H and KV...H range with hollow shaft output-side

Technical drawings: KA...H and KV...H range with hollow shaft output-side

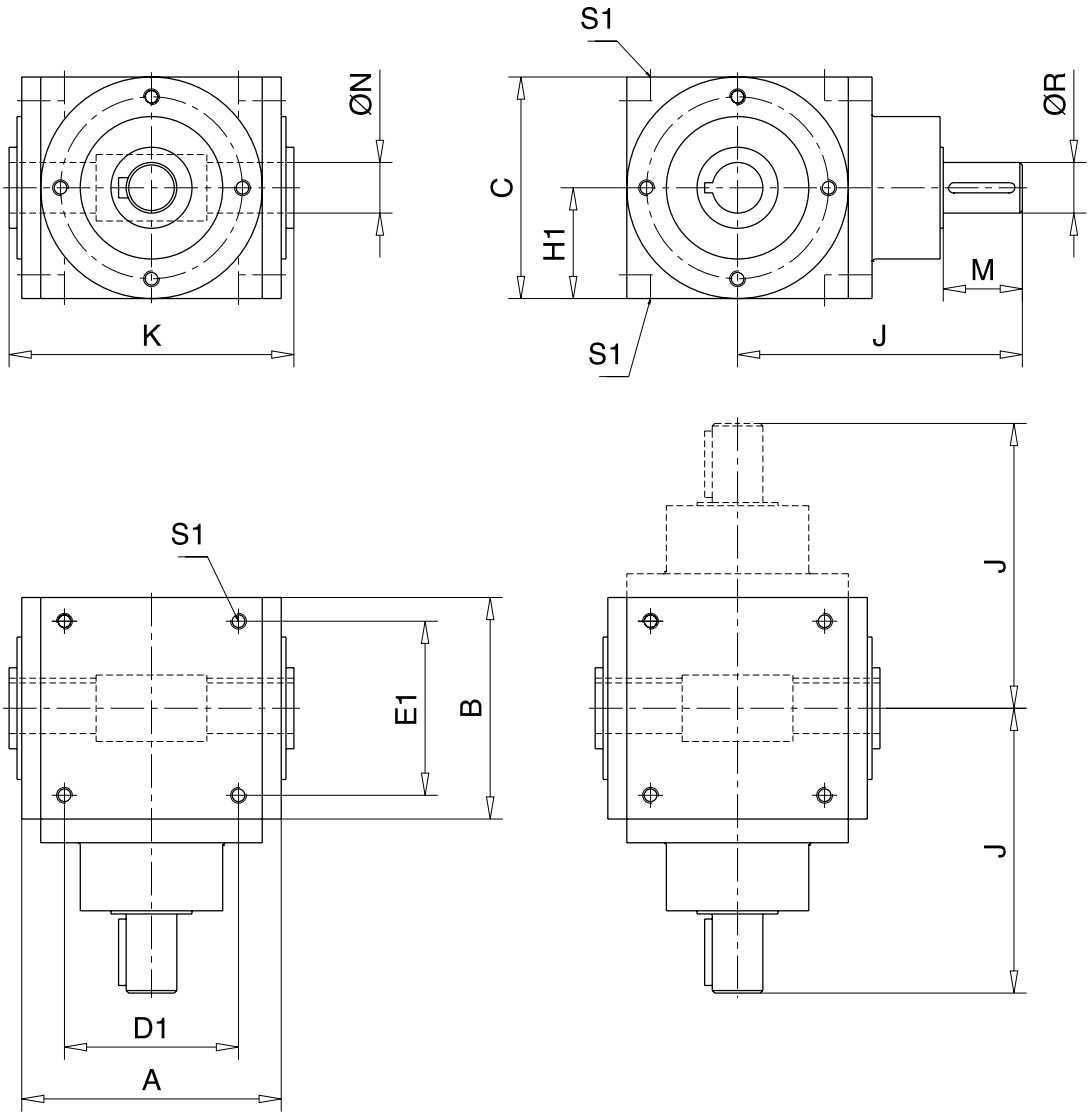

Only the most recent dimension plans are binding.

Dimensions: KA...H and KV...H range with hollow shaft output-side

Size	KA 1 H	KA 5 H	KA 9 H	KA 18 H	KA 35 H	KV 90 H	KV 120 H	KV 260 H	KV 550 H
A	84	110	144	164	190	280	300	402	490
B	65	90	120	140	160	230	260	350	450
C	65	90	120	140	160	230	260	350	450
$D1^{\pm 0,2}$	45	70	100	110	120	180	220	285	360
$E1^{\pm 0,2}$	45	70	100	110	120	180	220	285	360
H1	32,5	45	60	70	80	115	130	175	225
J	Depends on gear ratio, see pages 137–138 for dimensions								
K	92	124	160	174	206	300	350	480	640
M	Depends on gear ratio, see pages 137–138 for dimensions								
Ø N^{H7}	12	18	25	32	35	55	60	80	100
Ø R_{j6}	Depends on gear ratio, see pages 137–138 for dimensions								
S1	M6x12	M8x16	M10x18	M10x18	M12x24	M16x32	M16x32	M20x40	M20x40

Shaft center holes: DIN 332, Page 2, Feather keys and grooves: DIN 6885 Page 1.

Bevel gear boxes

KA...FH and KV...FH range with hollow shaft and motor flange input-side

Technical drawings: KA...FH and KV...FH range with hollow shaft and motor flange input-side

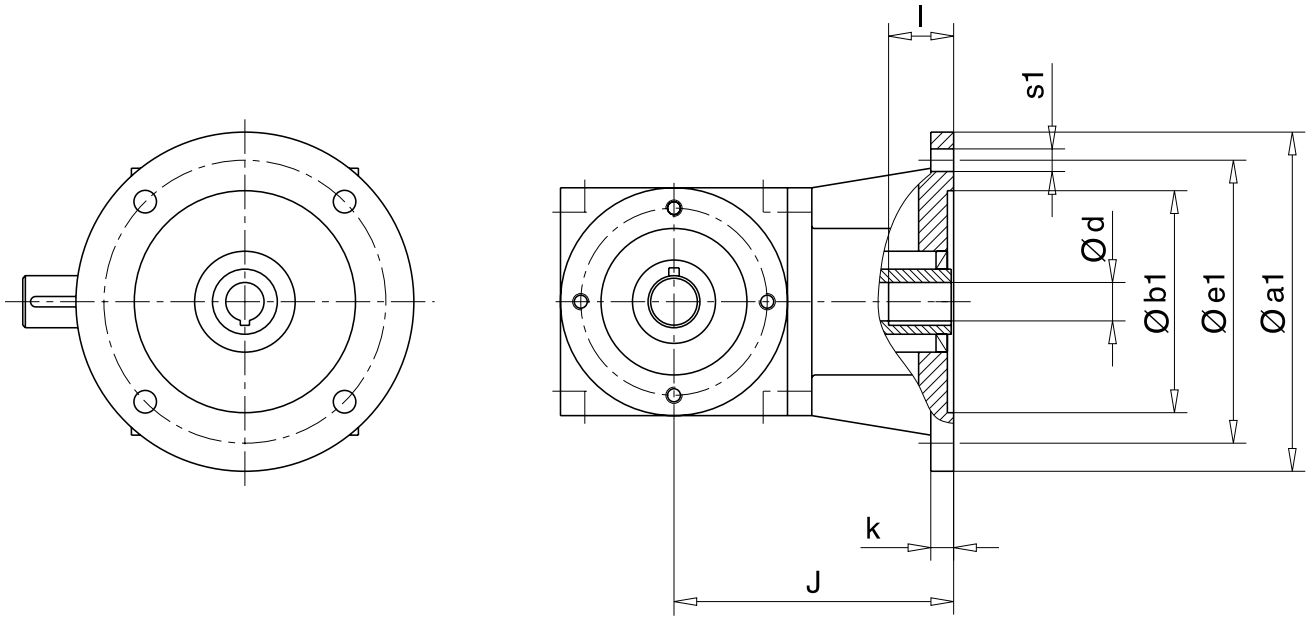

Only the most recent dimension plans are binding.

Dimensions: KA...FH and KV...FH range with hollow shaft and motor flange input-side

Size	Motor type	IEC flange			Hollow shaft	Flange dimensions		
		Øa1	Øb1	Øe1	Ød x l	J	k	s1
KA 1 FH	63	120	80	100	Ø11 x 23	90	10	4 x Ø7
	71	105	70	85	Ø14 x 30			4 x Ø7
KA 5 FH	71	140	95	115		110	12	4 x Ø9
	80	120	80	100	Ø19 x 40			4 x Ø7
		160	110	130				4 x Ø9
KA 9 FH	80	160	110	130		135	15	4 x Ø9
	90 L / S	140	95	115	Ø24 x 50			4 x Ø9
		160	110	130				4 x Ø9
		200	130	165				4 x Ø11
KA 18 FH	90 L / S	160	110	130		170	15	4 x Ø9
		200	130	165				4 x Ø11
	100 L	250	180	215	Ø28 x 60			4 x Ø14
KA 35 FH	90 L / S	200	130	165	Ø24 x 50	190	18	4 x Ø11
	100 L	250	180	215	Ø28 x 60			4 x Ø14
	112 M							
KV 90 FH	132 S / M	300	230	265	Ø38 x 81*	305	18	4 x M12
	160 M / L	350	250	300	Ø42 x 111*	335	24	4 x M16
	180 M / L	350	250	300	Ø48 x 111*			4 x M16
	200 L	400	300	350	Ø55 x 111*			4 x M16
KV 120 FH	on request							

For missing dimensions, please refer to the respective gear box types on pages 137–138.

* Assembly using clamping elements - special torque wrench required!

Bevel gear boxes
Mounting brackets for KA and KV range

Technical drawings: Mounting brackets Al for KA and KV range

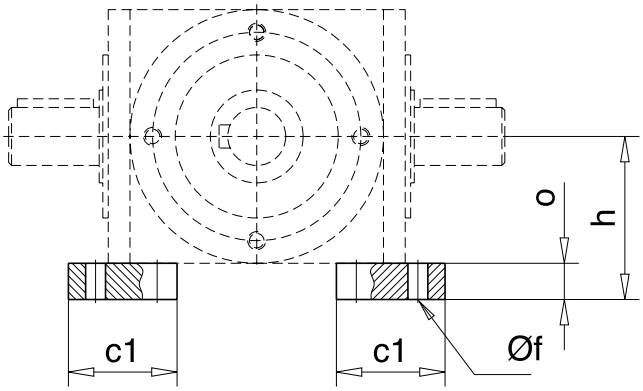

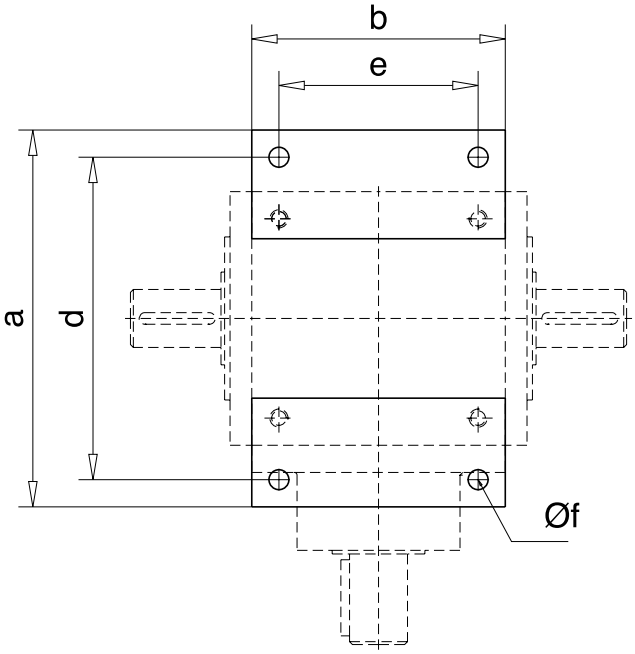

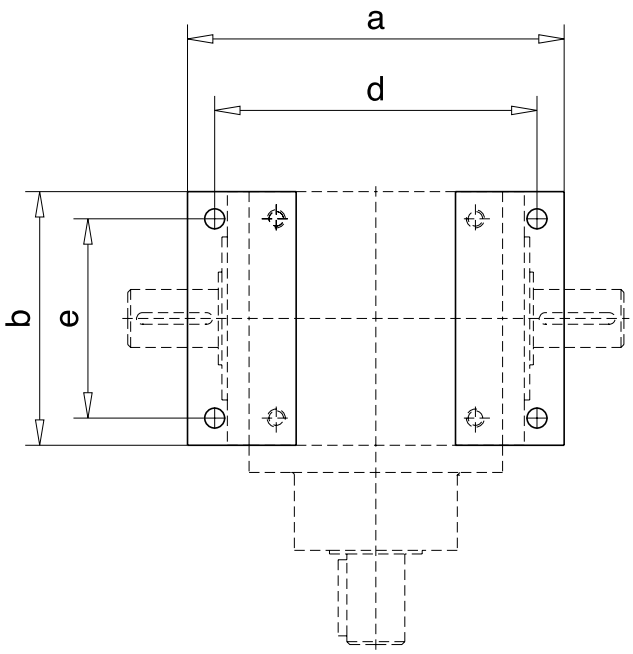

Only the most recent dimension plans are binding.

geändert wie oben

Dimensions: Mounting brackets Al for KA and KV range

Size	KA 1	KA 5	KA 9	KA 18	KA 35	KV 90	KV 120	KV 260	KV 550
a	100	140	190	210	250	340	380	490	590
b -0,5	84	90	120	140	160	230	260	350	450
c1	35	45	55	60	80	100	100	130	140
$d^{\pm 0,2}$	95	125	168	190	215	295	335	440	540
e	70	72	100	110	134	190	220	285	360
Ø f	6,6	9	11	11	14	18	18	22	22
h	44,5	57	75	90	105	145	165	210	255
o	12	12	15	20	25	30	35	35	30

Bevel gear boxes
Ordering details for K...13 range

Configurations: K...13 range

To process orders correctly we need to know the mounting position and configuration of the bevel gear box in addition to the type of gear box and ratio.

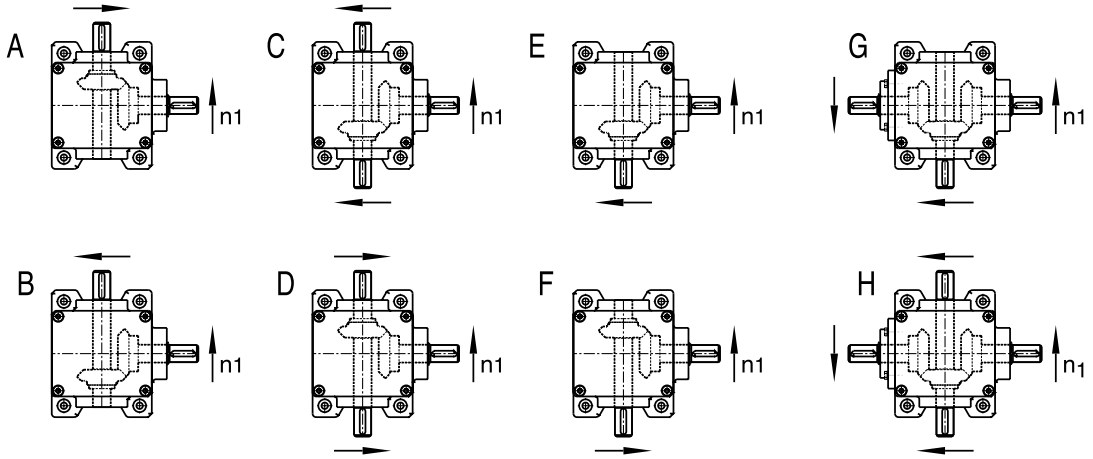

Mounting positions: K...13 range

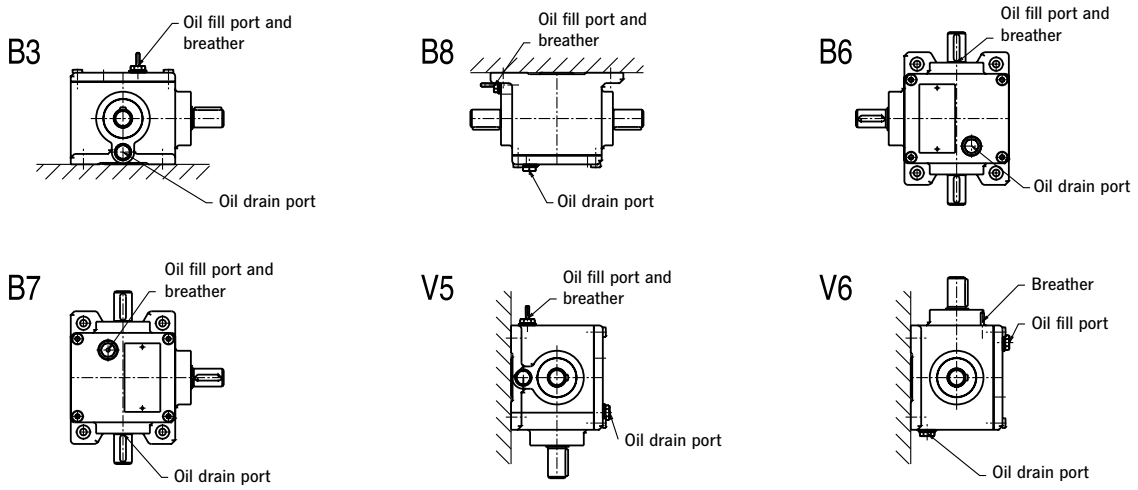

Ordering details: K... range

K ■■■.13-■■ : ■-■-■■-■■■■
1 2 3 4 5

No.	Description	
1	**Size**	**K 5.13 / K 11.13 / K 25.13 / KV 60.13**
2	**Ratio**	**1:1 / 2:1 / 3:1** **1:1 / 1,5:1 /2:1 / 3:1 / 4:1 / 5:1 (at KV 60.13)**
3	**Design**	**A / B / C / D / E / F / G / H**
4	**Mounting position**	**B3 / B8 / B6 / B7 / V5 / V6**
5	**Input speed n_1**	.....

Bevel gear boxes
Ordering details for KA and KV range

Configurations: KA and KV range

To process orders correctly we need to know the mounting position and configuration of the bevel gear box in addition to the type of gear box and ratio.

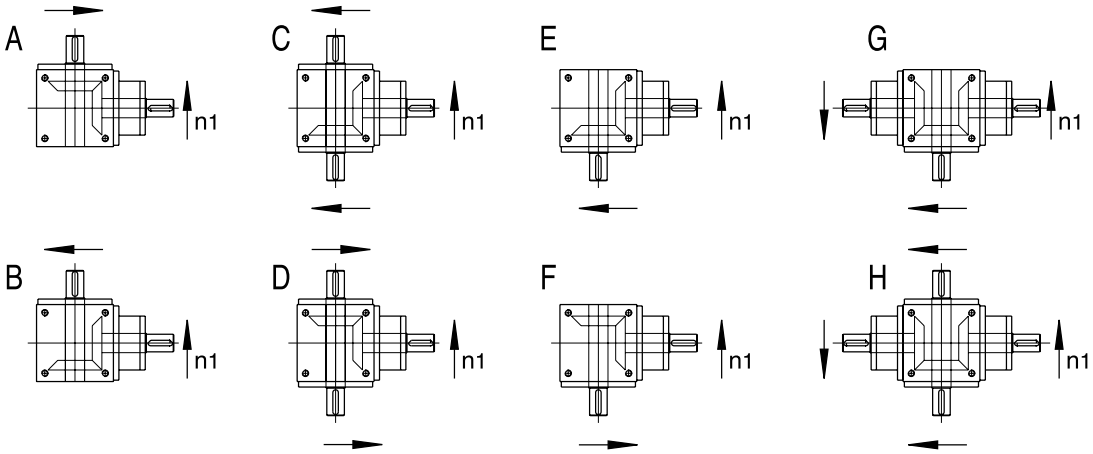

Mounting positions: KA and KV range

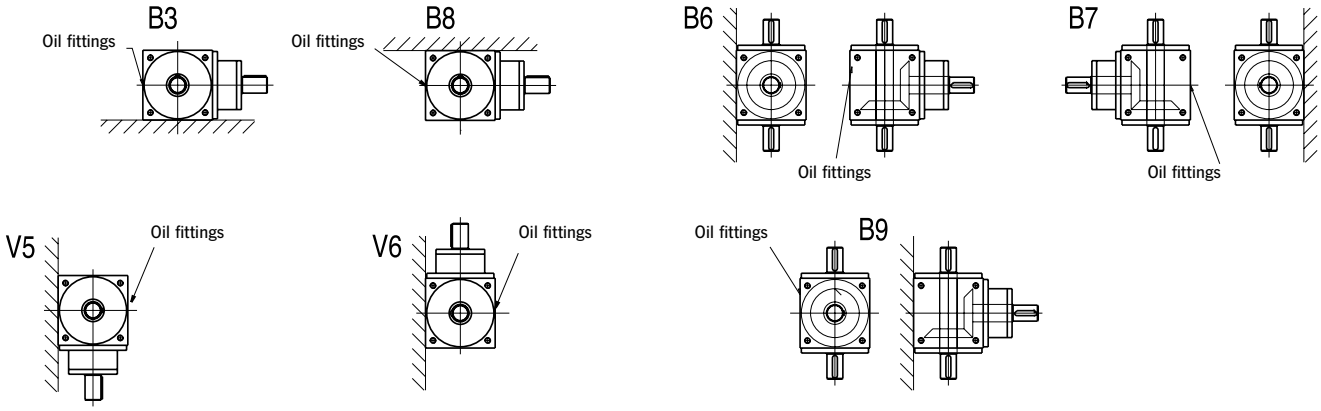

Ordering details: KA and KV range

K ☐☐☐☐-☐☐ : ☐-☐-☐☐-0-☐☐-☐☐☐☐-☐☐
1 2 3 4 5 6 7 8

No.	Description	
1	**Size**	**KA 1 / KA 5 / KA 9 / KA 18 / KA 35 / KV 90 / KV 120 / KV 250 / KV 550**
2	**Ratio**	**1:1 / 1,5:1 /2:1 / 3:1 / 4:1 / 5:1 / 6:1**
3	**Design**	**A / B / C / D / E / F / G / H**
4	**Shaft configuration**	**L** = trough shaft; **H** = hollow shaft out-put side; **FH** = Flange with hollow shaft input-side
5	**Tolerance class**	**0** = Torsional play max 15 angular minutes
6	**Mounting position**	**B3 / B8 / B6 / B7 / V5 / V6 / B9**
7	**Output speed n_2**	.....
8	**Mounting brackets**	**Al**

Project planning for worm gear screw jacks

Pfaff-silberblau accompanies its customers through the entire project planning process for the screw jack drive.

The basis for this is our system know-how acquired from decades of experience. This covers the initial consultation, design implementation, commissioning as well as data visualisation. We offer all project planning services from a single source: our customers appreciate this simplification of work.

Project planning for worm gear screw jacks
List of formulae

List of formulae			
Abbr.	**Designation**	**Measuring unit**	**Formula**
φ*	Lead angle	°	$\varphi = \arctan[P_h \div (d_2 \times \pi)]$
	Self-locking during shutdown*: $2{,}4° < \varphi < 4{,}5°$ (Self-locking out of actuation: $\varphi < 2{,}4°$) Not self-locking: $\varphi > 4{,}5°$		
η_{Anl}	Lifting system efficiency rating	–	
η_{HE}	Worm gear screw jack efficiency rating	–	
a	Acceleration	m/s^2	$a = v \div (60 \times t)$
As	Number of load cycles		
C_{dyn}	Dynamic load rating	kN	
C_{stat}	Static load rating	kN	
d_2	Pitch diameter	mm	
ED	Duty ratio	%/h	$ED = [Lift \times As \div (60 \times v)] \times 100\%$
F_{dyn}	Dynamic axial force (= lifting force)	kN	
F_{stat}	Static axial force (= retention force)	kN	
HU	Lift per rotation	mm	$HU = P_h \div i$
i	Transmission ratio	–	
L_h	Service life	h	$L_h = (C \div F_{dyn})^3 \times 10^6 \div (n_2 \times 60)$
n_1	Input speed	min^{-1}	
n_2	Output speed	min^{-1}	$n_2 = n_1 \div i$
P	Power rating	kW	$P = F_{dyn} \times v \div (60 \times \eta)$
P_h	Screw lead	mm	
pv-value	Surface pressure x sliding speed	$N/mm^2 \times m/min$	
p_{zul}	Permitted surface pressure	N/mm^2	
t	Time	s	
T_1	Drive torque	Nm	$T_1 = P \times 9550 \div n_1$
T_2	Output torque (= screw torque)	Nm	
T_A	Starting torque	Nm	$T_A \sim T_1 \times 1{,}3$
v	Lifting speed	m/min	$v = n_1 \times Ph \div (i \times 1000)$

*Vibrations and optimized sliding properties may affect the self-locking system. If in doubt, use a motor brake.

Configuration conforming to DIN EN 1570-1, DIN EN 280, DIN EN 1756, DIN EN 1493

Lead angle:

- $-2{,}4° < \varphi < 4{,}5°$ Motor with single braking torque
- $\varphi > 4{,}5°$ Two independent braking systems

Standards for theatre stages and broadcasting studios DGUV V17/18

Similar to configuration conforming to DGUV R100-500, chap. 2.10; although self-locking screw is not an absolute requirement if all torque transmitting components are designed to withstand twice the rated load.

Project planning for worm gear screw jacks
Service life L_h

A

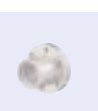

B

C

D

Design features

Long service life: the worm gear screw jacks and quick lifting screw jacks from Pfaff-silberblau are calculated and designed on the basis of many years of experience so that high service lives can be achieved if the operating instructions are observed.

Screw		Gearing layout	Bearing layout
Tr and S screw	**Ku ball screw**	**N or L**	**Thrust and radial bearings**
▪ These values are for guidance: only, as exact calculation is not possible ▪ Decisive layout factors are pressure and sliding speed (pv-value, p_{zul}) ▪ Guaranteed relubrication ▪ Ideal installation	▪ Calculation: $L_h = (C \div F_{dyn})^3 \times 10^6 \div (n_2 \times 60)$	**Worm-drive gearing:** ▪ SHE standard screw jack and MERKUR: approximate values according to DIN 3996-D ▪ In the case of HSE high performance screw jack, according to DIN 3996-C **Bevel gear tooth system:** ▪ SHG quick-lifting screw jacks, L_h = fatigue endurable	▪ Calculations according to DIN or data supplied by the bearing supplier

Guidelines for use

Corrosion protection

Corrosion-protected aluminum housing for the ranges:

- SHE Size 0,5 and 1.1
- MERKUR Size M 0, M 1 and M 2
- HSE Size 32 and 36.1
- SHG Size G 25

Surface coating for all other sizes:

- SHE and HSE housings with ranges-applied prime coat
- MERKUR and SHG with phosphate coated housings

Option - Corrosion protection in special design for all ranges:

- Special coatings
- Screws and screw heads made of material 1.4305, 1.4301, 1.4571
- Worm-drive shafts made of rust-free material
- SHE range in completely rust-free material configuration

Option - Corrosion protection provided by surface coatings the screws and drive shafts for all ranges

Dirt protection

- Leak proofing of all ranges by means of rotary lip seals fitted to drive shafts is standard
- Enclosed housing configuration on HSE und SHG ranges using additional seals
- Screw protection tube for type 1

Option – Lifting screw protective covers:

- Flexible protection boots made of various materials to prevent entry of dirt and for outdoor use (water -proof)

Project planning for worm gear screw jacks
Precision ratings

Axial clearance „a“

Always in exact position: if the load direction acts on one side, the axial clearance has no influence on the positioning accuracy. The reason for this is adjacent thread flanks.

Trapezoidal or buttress-thread screw	Ball screw
Standard: 0,1 mm ≤ a ≤ 0,3 mm depending on size	Single flange nut a ≤ 0,05 mm
Modified configuration: Axial play can be readjusted	Initial tension depending on size of ball 0,01 mm ≤ a ≤ 0,03 mm Pre-stressed double nut a ≤ 0,01 mm

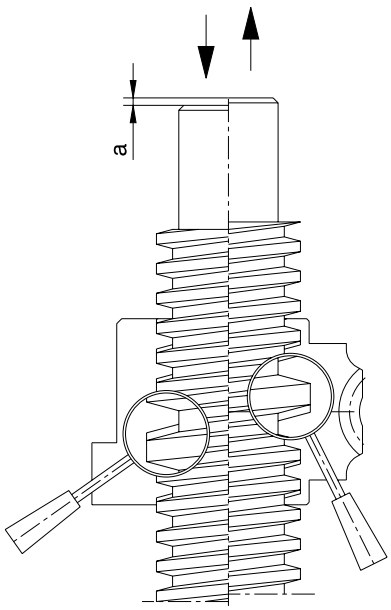

Lateral clearance „b“

Standard

Lateral clearance „b” occurs only in the case of type 1 as a result of play between the guide ring and the outer diameter of the screw. It comes up to about 0,2 mm and effects a linear calculative deviation „b“ depending on stroke length. The amount of play „b” can be reduced by means of a second guide ring.

Special configuration

2nd guide ring with reduced play and additionally ground screw material.

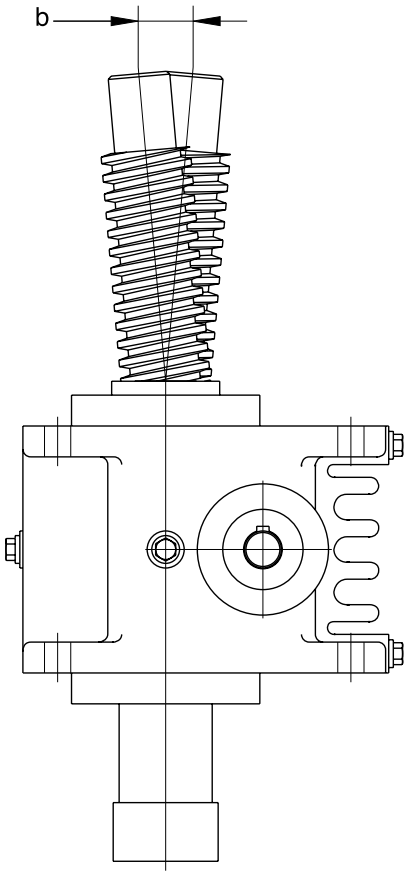

Project planning for worm gear screw jacks
Precision ratings

Tooth backlash worm gearing

Tooth backlash when new
(0.1 – 0.3 mm) changes with wear, depending on size and center distance.

Tooth backlash bevel gearing

Tooth backlash (0.05 – 0.1 mm)
remains constant over the service life.

Screw lead error

Trapezoidal screw thread conforming to DIN 103 T1; Buttress screw thread conforming to DIN 513		**Ball screw thread conforming to DIN 69051 T3**
Whirled screw (standard) ± 0,05 mm	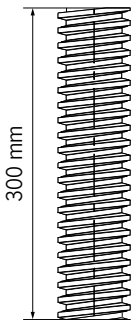	**Whirled** screw (standard) Tolerance classification T7; P300 = 0,052 mm
Rolled screw ± 0,1 mm		Ground screw; Tolerance classification T1-5; P300 = 0,006 – 0,023 mm Rolled screw; Tolerance classification T9; P300 = 0,1 mm

Project planning for worm gear screw jacks
Flow diagram

Axial force [kN]
F_{dyn} Dynamic force
F_{stat} Static force (retention force)
Lifting speed v [m/min]
Stroke [mm]
Determine configuration (type 1 or type 2)

↓

Dimensioning of screw according to load direction

Compression load →

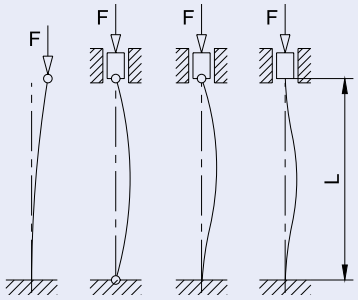

Screw diameter as displayed (Page 152–153)
Note: for type 2 (rotating screw) reinforced spindle-Ø can be used

Tensile load ↓

Determine duty ratio ED [%/h]
Determine power rating P [kW]
see formulae collection page 145

↔

Technical information
see e.g.:
Performance tables
Critical screw turning speed (Page 154)
Permitted lateral force on screw (Page 155–156)
Ball screws Ku (Page 157)
Dimensioning lifting jacks (Page 158–159)

↓

Pre-selection depends on performance limits of screw jack and diameter of screw
see selection tables of screw jacks

↓

Are additional conditions to be observed?
- Extraordinary operating conditions
- Shocks/Strokes
- Lateral loads
- Duty ratio > 20 %/h
- Standards to be observed:

e. g. DGUV R100–500, chap. 2.10 (elevating platforms),
DGUV V17/18 BGV C1 (theater stages and broadcasting studios)

Yes →

Check
according to
„Project planning“ (Page 145–163),
„Construction aid“ (Page 14–15)

or consult our
screw jack specialists

Hotline:
Phone: +49 8233 2121 777
sales.kissing@cmco.eu

No ↓

Selected gear size can be applied

Project planning for worm gear screw jacks
Dimensioning of worm gear screw jacks

Example: Single drive unit with motor

- Required axial force F_{dyn} 20 kN
- Required lifting speed v 1,9 m/min
- Required lift 1200 mm
- Selected configuration see page 10–11
- Guides fitted on site Yes (Euler's case III)
- Load cycles per hour 10
- Travel per load cycle 1200 mm
- Configuration Type 1 (Lifting screw)

Screw	From buckling diagram	Tr 50x9	
Pre-selection of worm gear screw jack	from selection table	HSE 63.1	
Required drive performance	2,0 kW	Performance limit according to selection table page 63	$P_{erf} < p_{zul}$ = 2,3 kW
Duty ratio	11%/h	For formula, see page 145	$ED_{vorh} < ED_{zul}$ = 20%/h
Selected motor	2,2 kW, 1500 min^{-1}		
Selected size HSE 63.1 is ok			

Manual operation for lifting elements

Manual operation

Take possible drive torque T_1 and/or manual force into account
(values based on past experience: approx. 150 to max. 200 N)

No ED (duty ratio) check required

Ratio N
T_1 = higher
Lift/Rotation = larger

Ratio L
T_1 = lower
Lift/Rotation = less

Project planning for worm gear screw jacks
Dimensioning of worm gear screw jacks

Motor drive for lifting elements

Motor drive

- Observe the max. permitted drive capacity of the lifting element. (See selection tables)
- Observe the max. permitted duty ratio. (See selection tables)
- Observe the additional friction coefficients of the guide elements etc.
- Take the type of motor (Three-phase, DC, hydraulic etc.) into account with respect to start-up characteristics, impact coefficient and etc.

Motor designs	
Required starting torque	**T_A ~ 1,3 x T_N**
High lifting speeds, e. g. servo drive system	Inertial mass and acceleration time are decisive factors for configuration

Adjustment and stopping accuracy

The level of adjustment accuracy depends mainly on the precision of the screw (see page 147–148). Positioning accuracy is influenced, in the case of motor-actuated units, by the electrical control and regulating system, the control system of the brake and by the adjustment precision of the limit switches.

DO NOT allow motor-actuated components to collide with fixed end-limit stops!

Project planning for worm gear screw jacks
Permitted buckling force

The various installation factors are ordered by Euler value

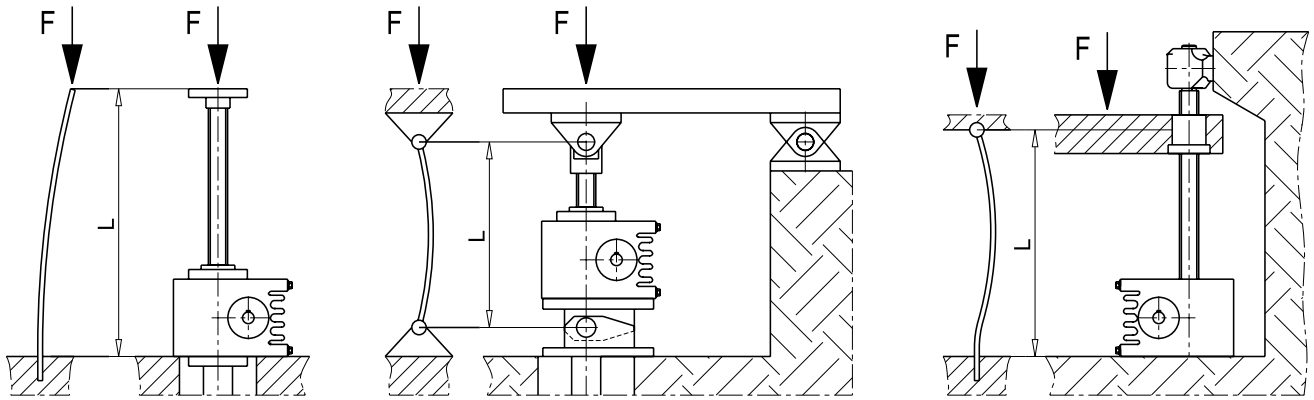

Euler's case I **Euler's case II** **Euler's case III**

Screw dimensioning of the screw jacks for compression force

The permitted buckling force for trapezoidal and ball screws can be verified using the following buckling diagrams.

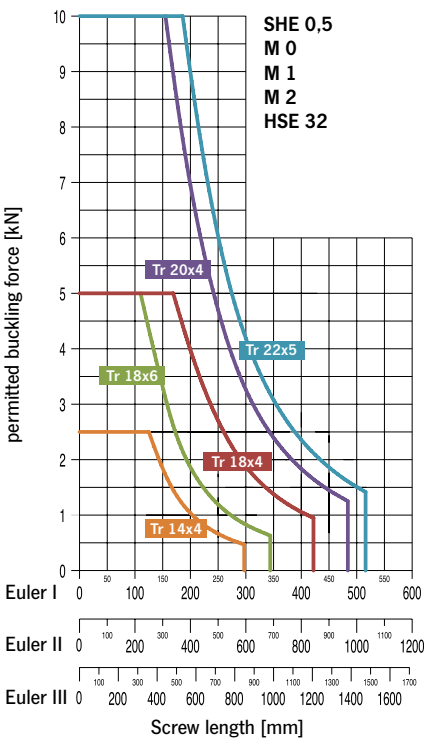

Buckling diagrams:
Tr 14x4, Tr 18x6, Tr 18x4,
Tr 20x4, Tr 22x5

Security for:
Compression range S = 4
Tetmajer S = 4...5 increasing

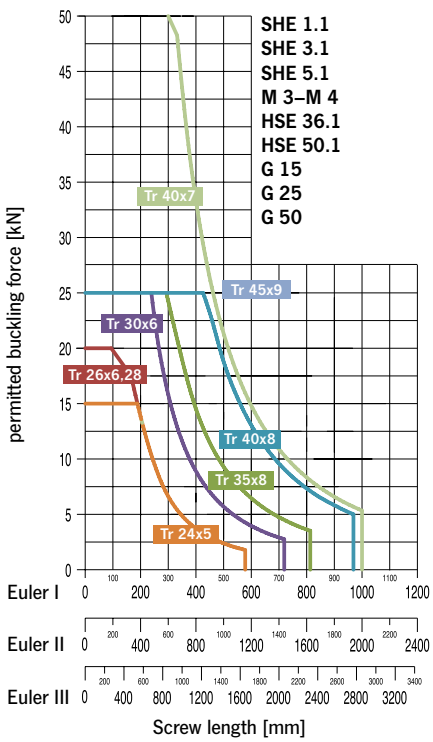

Buckling diagrams:
Tr 24x5, Tr 26x6,28, Tr 30x6, Tr 35x8,
Tr 40x8, Tr 40x7

Security for:
Compression range S = 4
Tetmajer S = 4...6 increasing
Euler's range S = 5

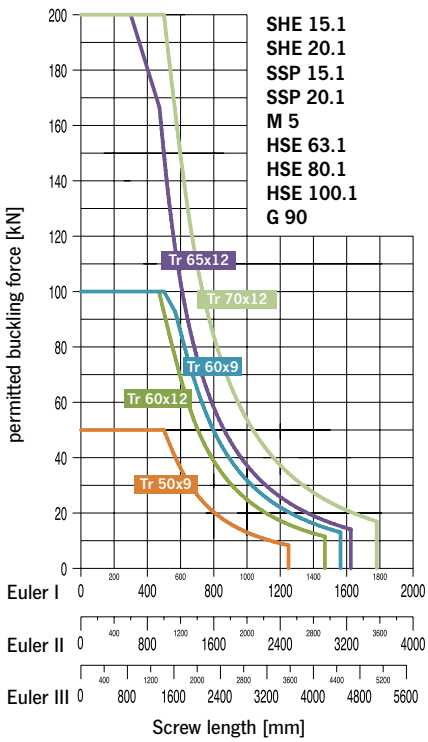

Buckling diagrams:
Tr 50x9, Tr 60x12, Tr 60x9,
Tr 70x12, Tr 65x12

Security for:
Compression range S = 4
Tetmajer S = 4...6 increasing
Euler's range S = 5

Project planning for worm gear screw jacks
Permitted buckling force

Screw dimensioning of the screw jacks for compression force

SHE 25 / SHE 35 / SHE 50.1 / SSP 25 / M 6 / M 7/ M 8 / HSE 125.1

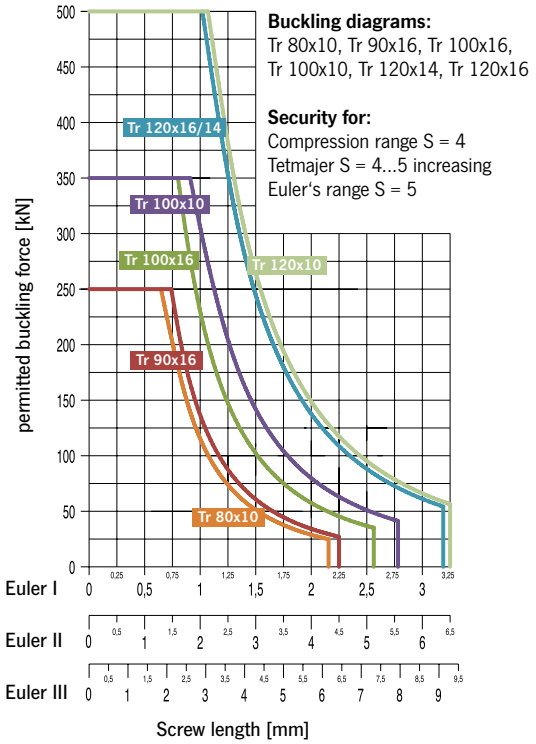

SHE 75 / SHE 100 .1 / SHE 150 / SHE 200 .1 / HSE 200.1

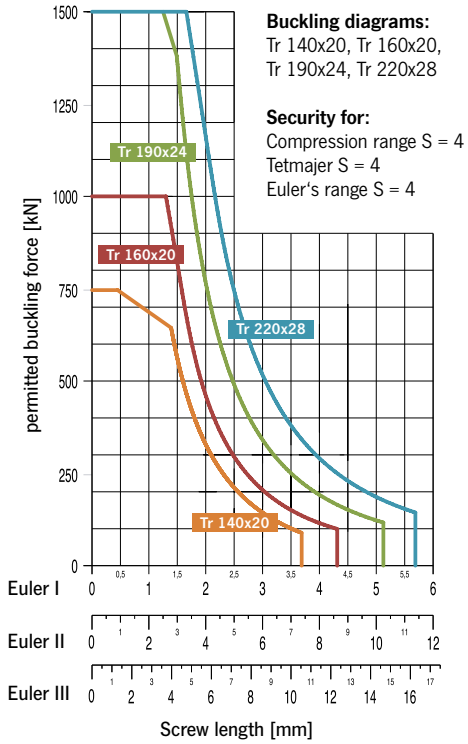

Ball screw

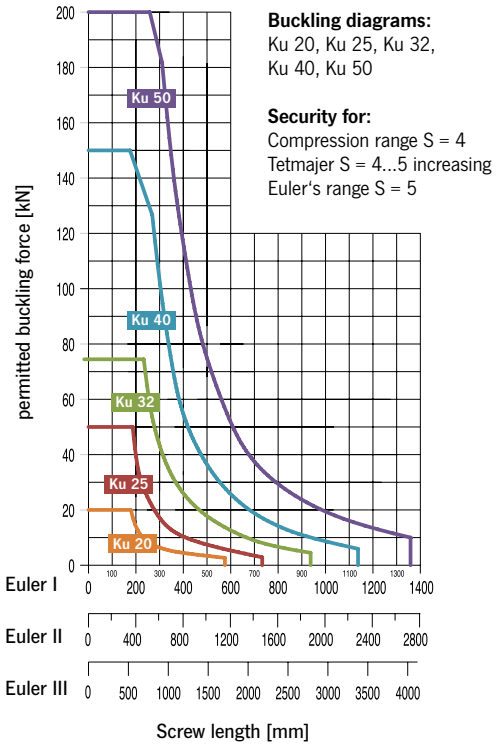

Ball screw

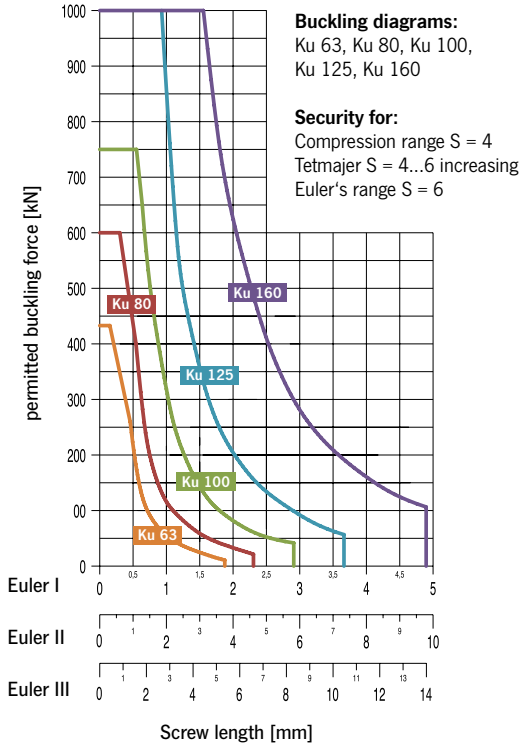

Project planning for worm gear screw jacks
Critical screw turning speed

Critical screw turning speed

The critical speed (only configuration type 2) is dependent on the screw diameter, the screw length and the screw bearing arrangement (see case 1–4).

Critical Speed n_K [min^{-1}]

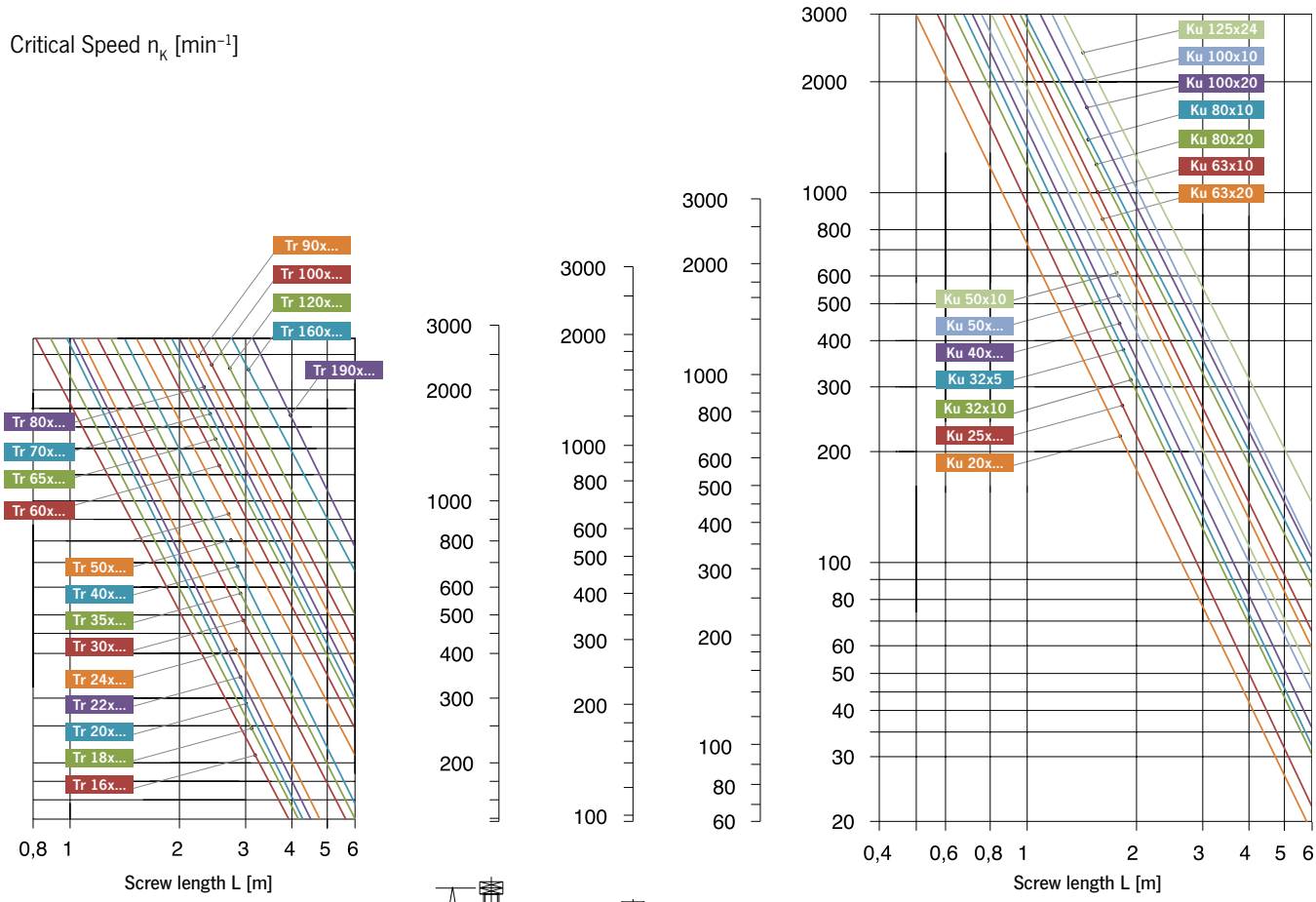

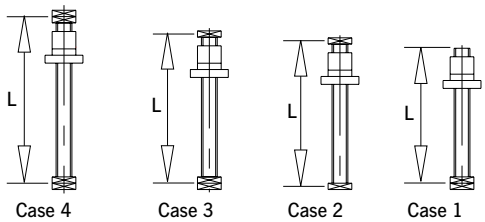

Lifting screw bearing arrangement

$$n_{kzul} = n_k \times 0{,}8$$

COLUMBUS McKINNON

Project planning for worm gear screw jacks
Permissible lateral force on the screw

Technical drawing

The permissible lateral force Fs on the screw depends on the axial force Fa, the screw diameter d and the screw length L. The maximum lateral forces applied must be below the values in the table.

We will be pleased to advise you whether or to what extent lateral forces are permissible in your application.

Type 1

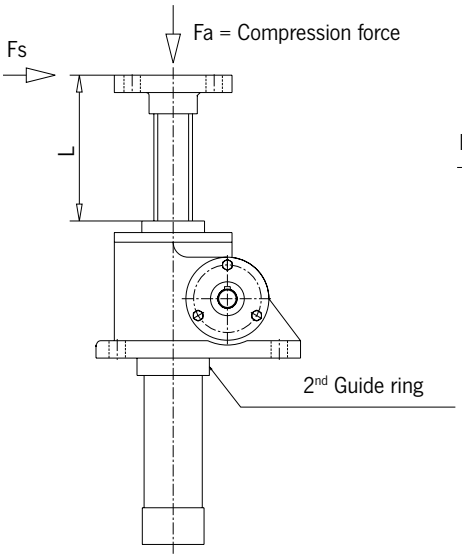

Type 2

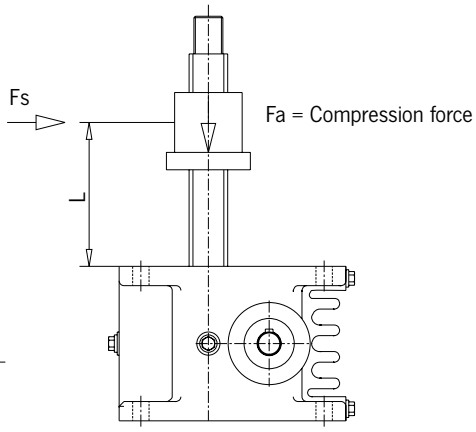

Attention: only static configuration permissible

Technical information

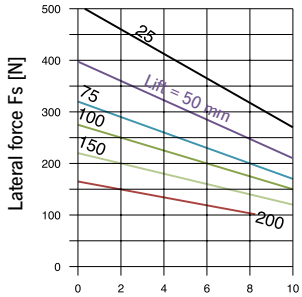

Axial force Fa [kN]
M 2
(Tr 20x4, Tr 22x5)

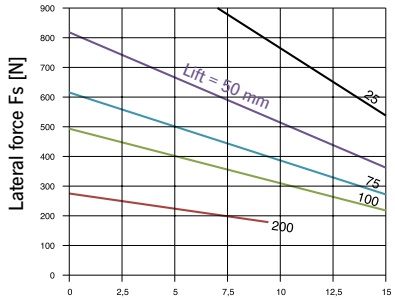

Axial force Fa [kN]
SHE 1.1, G 15, HSE 36.1
(Tr 24x5)

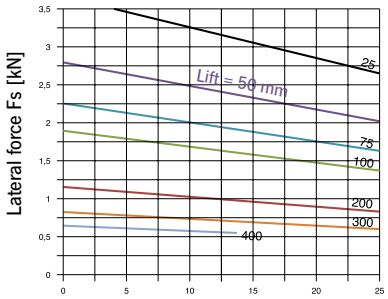

Axial force Fa [kN]
G 25
(Tr 35x8)

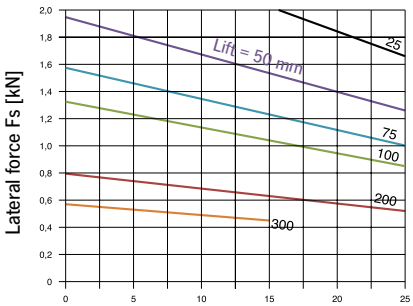

Axial force Fa [kN]
SHE 3.1, M 3
(Tr 30x6)

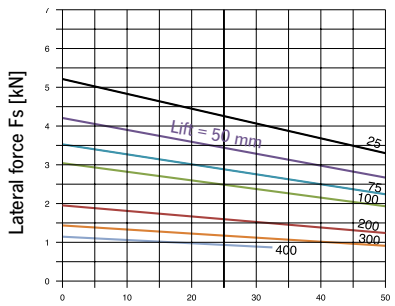

Axial force Fa [kN]
SHE 5.1, M 4, HSE 50.1, G 50
(Tr 40x7, Tr 40x8)

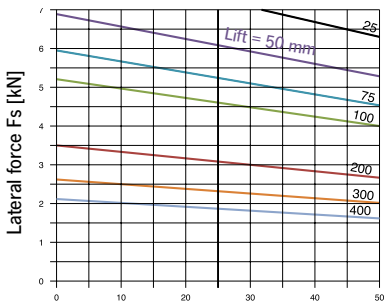

Axial force Fa [kN]
HSE 63.1
(Tr 50x9)

Project planning for worm gear screw jacks
Permissible lateral force on the screw

Technical information

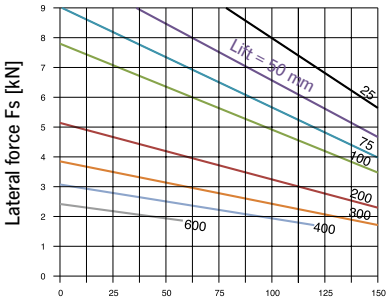

Axial force Fa [kN]
SHE 15.1, HSE 80.1
(Tr 60x12)

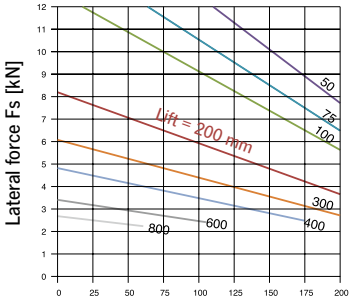

Axial force Fa [kN]
M 5, G 90
(Tr 65x12, Tr 60x9)

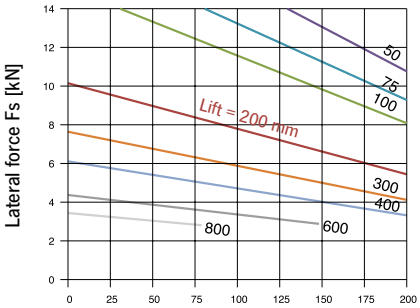

Axial force Fa [kN]
SHE 20.1, HSE 100.1
(Tr 70x12)

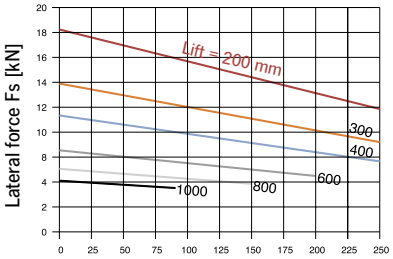

Axial force Fa [kN]
M 6
(Tr 80x10)

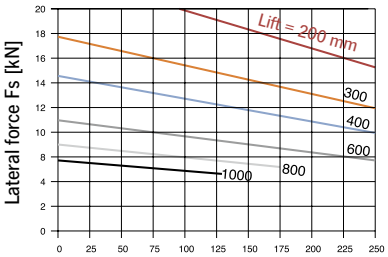

Axial force Fa [kN]
SHE 25
(Tr 90x16)

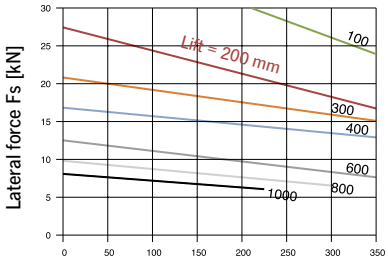

Axial force Fa [kN]
SHE 35, M 7, HSE 125.1
(Tr 100x16, Tr 100x10)

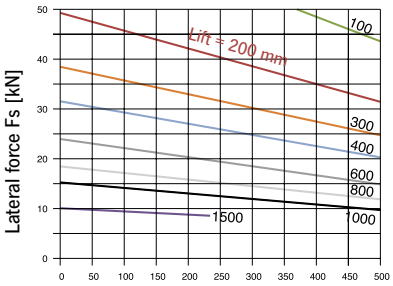

Axial force Fa [kN]
SHE 50.1, M 8
(Tr 120x16, Tr 120x14)

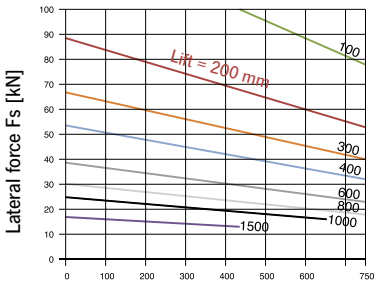

Axial force Fa [kN]
SHE 75
(Tr 140x20)

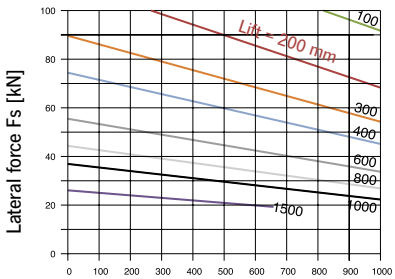

Axial force Fa [kN]
SHE 100.1, HSE 200.1
(Tr 160x20)

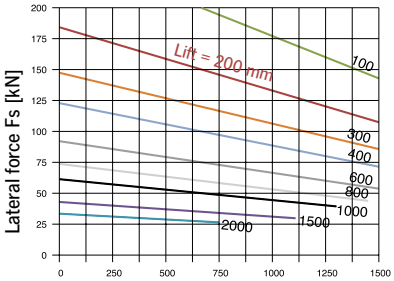

Axial force Fa [kN]
SHE 150
(Tr 190x24)

Project planning for worm gear screw jacks
Ball screw Ku

Dimensions

Standard dimensions and load ratings for configuration **type 1.** Other pitches and load ratings are available on request.

With **type 2,** it is possible to use reinforced screws with other pitches and higher load ratings.

Ball screw Ku – SHE range

SHE	Ku screw	C_{dyn} [kN]	C_{stat} [kN]
3.1	25 x 05	24,1	499
	25 x 10	14,8	27,2
5.1	32 x 05	26,4	62
	32 x 10	27,5	51,3
15.1	50 x 10	111,5	338
	50 x 24	51,7	113
20.1	50 x 10	111,5	338
	50 x 24	51,7	113
25	80 x 10	135	596
	63 x 20	92,4	299
35	100 x 10	179	1016
	80 x 20	241	661
50.1	125 x 10	176	1257
	100 x 20	488	1713
75	140 x 10	202	1458
	125 x 20	526	2206
100.1	160 x 20	570	2900
	125 x 24	472	1660

Ball screw Ku – MERKUR range

MERKUR	Ku screw	C_{dyn} [kN]	C_{stat} [kN]
M1	16 x 05	7	12,7
	16 x 10	-	-
	16 x 20	7,4	14,2
M2	20 x 05	8	17
M3	25 x 05	9,5	22,4
	25 x 25	12,8	32,6
M4	40 x 05	19	63,5
	40 x 10	30	70
	40 x 20	30,5	87,5
M5	50 x 10	55	153
M6	on request		
M7			
M8			

Ball screw Ku – HSE range

HSE	Ku screw	C_{dyn} [kN]	C_{stat} [kN]
36.1	20 x 05	22,7	44,1
	20 x 10	13,7	24,6
50.1	32 x 05	26,4	62
	32 x 10	27,5	51,3
63.1	40 x 10	78,7	170,5
	40 x 24	48,4	85,2
80.1	63 x 10	136	511
	50 x 24	158	247
100.1	80 x 10	135	596
	63 x 20	92,4	299
125.1	100 x 20	488	1713
	80 x 20	241	661
200.1	160 x 20	570	2900
	125 x 24	472	1660

Ball screw Ku – SHG range

SHG	Ku screw	C_{dyn} [kN]	C_{stat} [kN]
G15	20 x 20	9	19,1
	25 x 05	9,5	19
G25	25 x 05	31,2	44,8
	25 x 10	23,4	33,6
G50	32 x 10	25,7	56
	32 x 20	19,5	65
	32 x 40	11,5	33,5
	40 x 05	19	63,5
G90	63 x 10	60	200

Project planning for worm gear screw jacks
Dimensioning of lifting systems

A

B

C

D

Flow diagram

Overall force F_{ges} of the system [kN]
Lifting speed
Selection schematic drive-system layout
(Page 160–163)
Number and arrangement of screw jacks, type of motor, connecting shafts, bevel gear boxes, couplings

$$P_{AnI} = \frac{F_{ges} \times v}{60 \times \eta_{HE} \times \eta_{AnI}}$$

$$T_{AnI} = \frac{P_{AnI} \times 9550}{n_1}$$

$\eta_{AnI} \sim 0{,}8$
η_{HE} according to selection table

T_{AnI} = minimum nominal torque of motor

$$P_{HE} = \frac{P_{AnI} \times 1{,}3^*}{\text{Number of screw jacks}}$$

Check worm gear screw jack according to selection table

*Factor for unequal load distribution = 1,3

Observe the maximum drive torque on drive shaft of screw jack

Determine type of motor according to P_{AnI}, turning speed, with/without brake, torque T_A

For non-self-locking lifting systems
Provide motor with safety spring brake

Starting torque
$T_A \sim T_{AnI} \times 1{,}3$

Configure bevel gear boxes, couplings, connecting shafts
(According to torque and turning speed)

Project planning for worm gear screw jacks
Dimensioning of lifting systems

Example: Technical specificatons

- F_{ges} = 60 kN (dyn. and stat.)
- v = 1,9 m/min
- ED = 20 %/h
- Schematic view 4.1
- Three-phase motor
- Bevel gear box i = 1:1

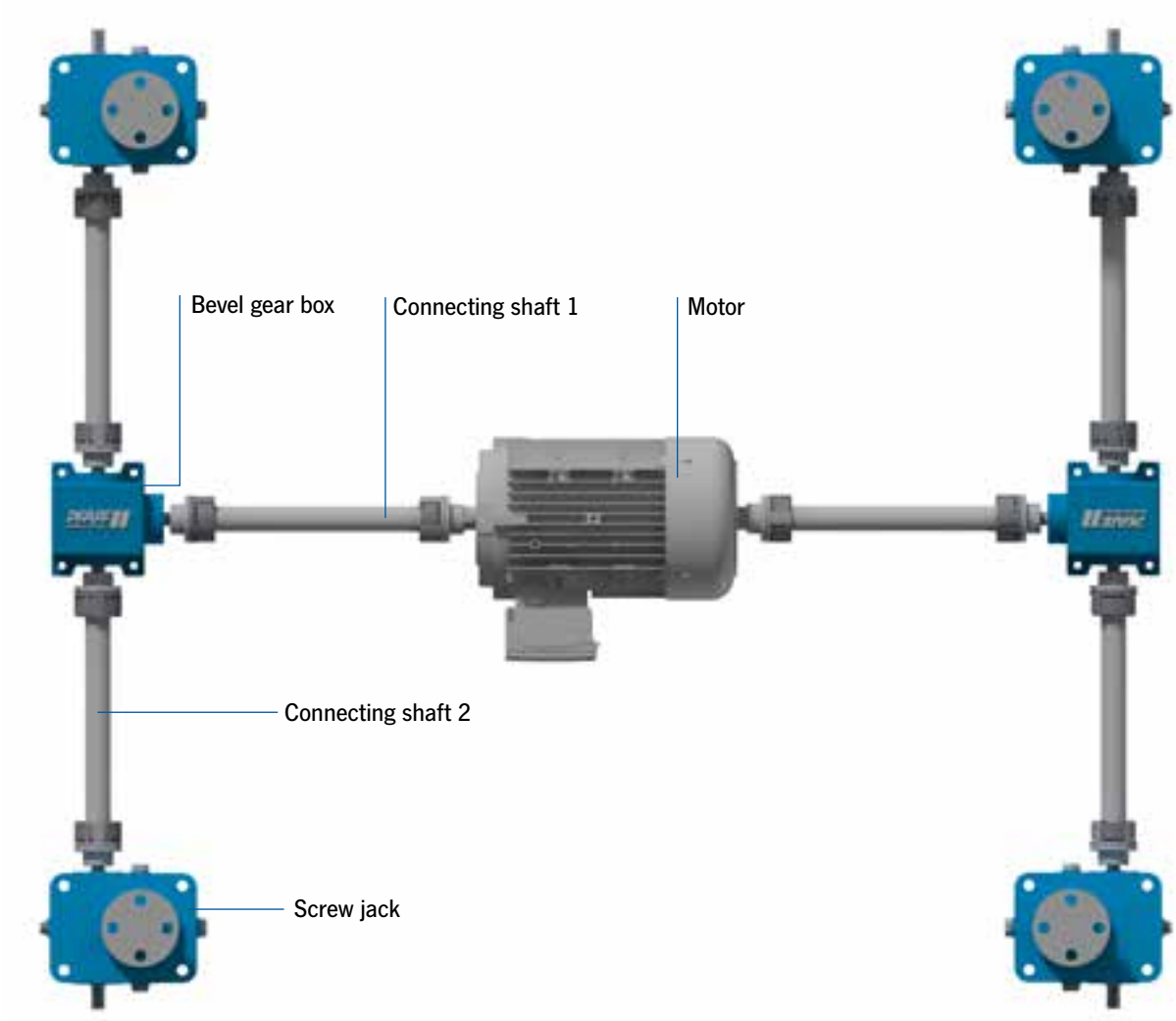

F_{HE} = 50 kN/4×1.3 F_{HE} = 19,5 kN	**Pre-selection of screw jack according to page 158**	**HSE 63.1, Tr 50x9, η_{HE} = 0,311; P_{HE} = 2,0 kW; η_{Anl} ~ 0,8**
P_{Anl} = 6,36 kW	Motor selection 7,5 kW n_1 = 1500 min^{-1}	Motor 132 M/4
T_{Anl} = 49 Nm	T_{Keg} = 25 Nm, i = 1:1 (Chapter „Bevel gear boxes“ page 130–143)	Bevel gear box K 11.13
	T_{GW1} = 25 Nm, n_1 = 1500 min^{-1}; Observe max. length according to n_{krit} (Chapter „Connecting shafts“ page 106–115)	Connecting shaft ZR 28/38
	T_{GW2} = 12,5 Nm, n_1 = 1500 min^{-1}; Observe max. length according to n_{krit} (Chapter „Connecting shafts“ page 106–115)	Connecting shaft ZR 24/28

Project planning for worm gear screw jacks
Schematic drive system layout

Explanation of symbols

Worm gear screw jacks and quick lifting screw jacks of the Pfaff-silberblau brand can be used as individual drives or combined to form multi-screw systems. Multi-screw drives with mechanical synchronisation are driven by **one** motor. They are therefore insensitive to uneven load distribution and its negative effects on the synchronisation of the screw jacks. Multi-screw systems with electrical synchronisation are characterised by a low need for mechanical connecting elements (smooth running), but they require greater control complexity. Exact synchronisation of the drives also results from suitable dimensioning of the drive motors in conjunction with master-slave control.

Note:
When using quick lifting screw jacks, the bevel gearboxes can be omitted if the jacks are arranged suitably.

Screw jack

Connecting shaft

Coupling

Standard motor

Spur gear motor

Pillow block

Bevel gear box

IEC Flange

Worm gear motor
Bevel gear motor

Project planning for worm gear screw jacks
Schematic drive system layout

Single drive unit: Schematic view 1

Schematic view 1.1

Worm gear screw jack – coupling – motor
in configuration B3 (base mounting)

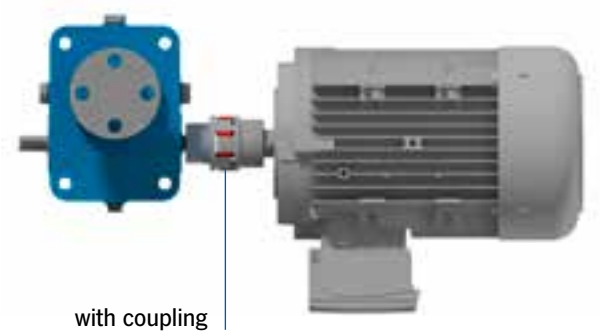

Worm gear screw jack – coupling – IEC flange
in configuration B14 or B5 (IEC flange mounting)

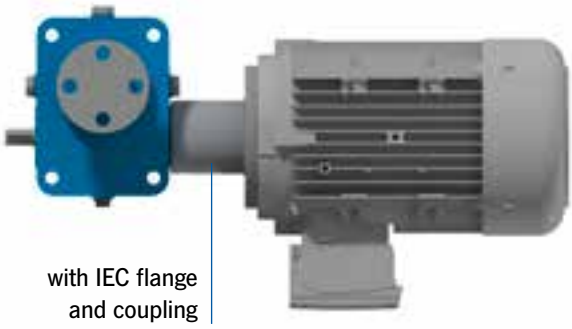

Multi-screw lifting system – mechanically synchronized: Schematic view 2

Schematic view 2.1

Schematic view 2.2

Schematic view 2.4

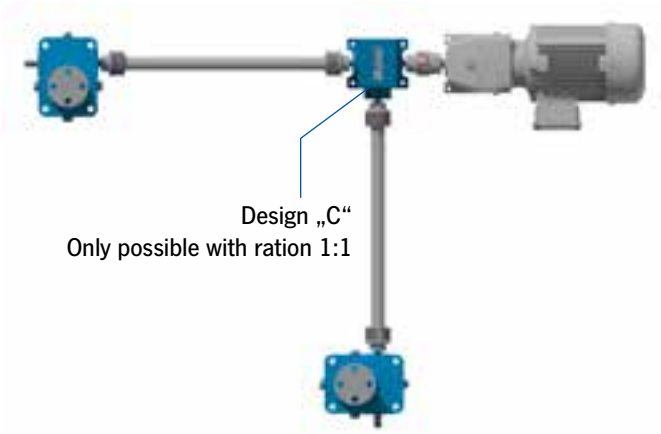

Schematic view 2.3

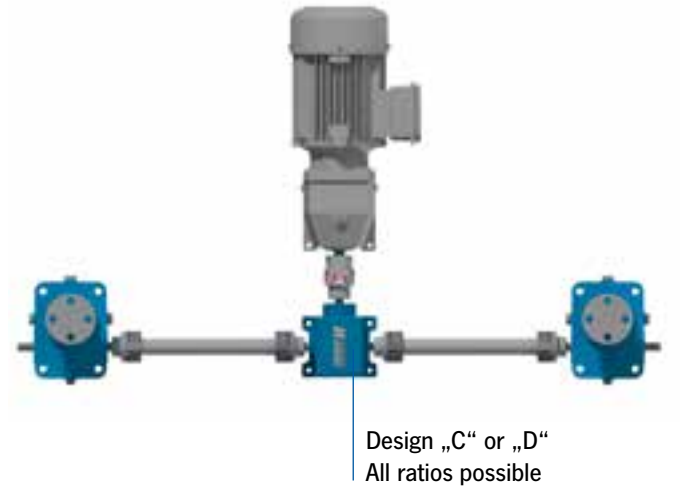

Project planning for worm gear screw jacks
Schematic drive system layout

Multi-screw lifting system – mechanically synchronized: Schematic view 3

Schematic view 3.1

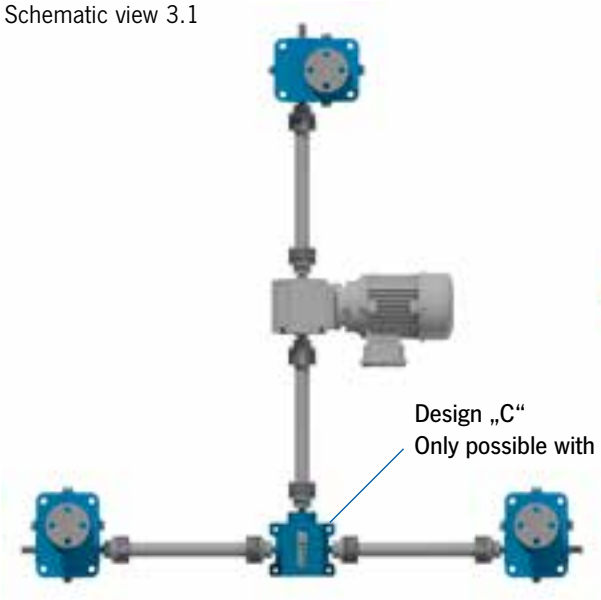

Schematic view 3.2

Schematic view 3.3

Multi-screw lifting system – mechanically synchronized: Schematic view 4

Schematic view 4.1

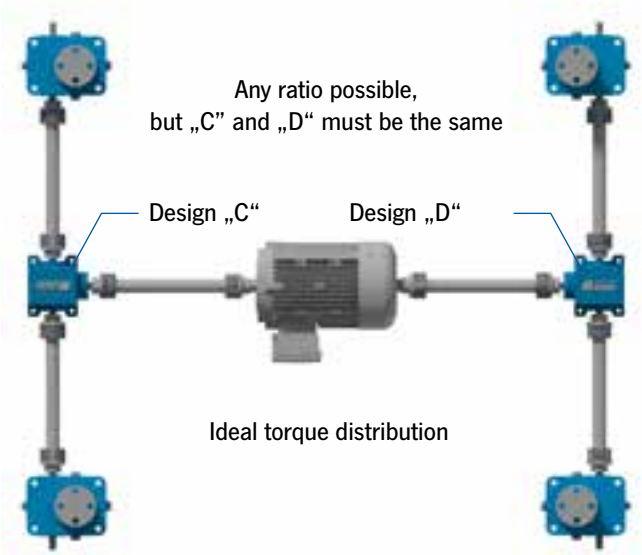

Schematic view 4.2

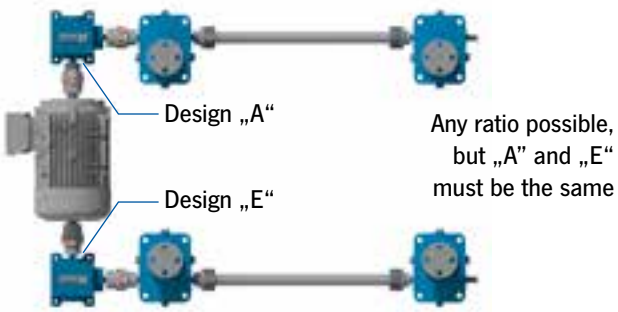

Schematic view 4.3

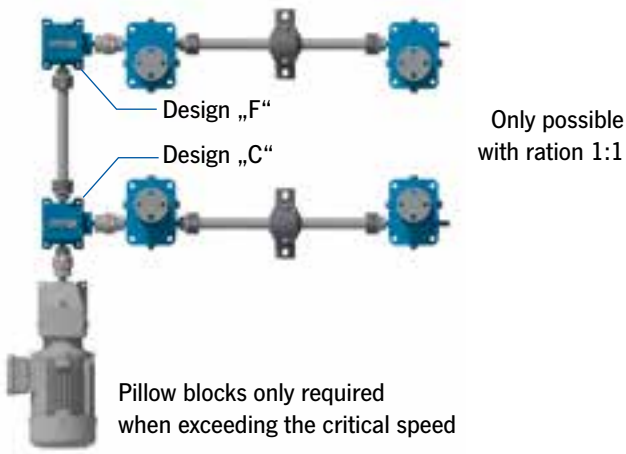

Schematic view 4.5

Project planning for worm gear screw jacks
Schematic drive system layout

Multi-screw lifting system – mechanically synchronized: Schematic view 6

Schematic view 6.1

Any ratio possible,
but „C" and „H" must be the same

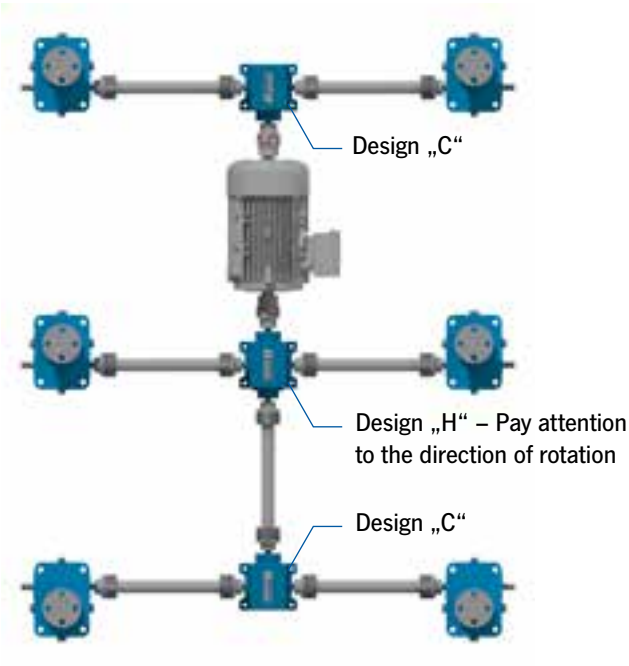

Schematic view 6 .2

Any ratio possible,
but „A" and „E" must be the same

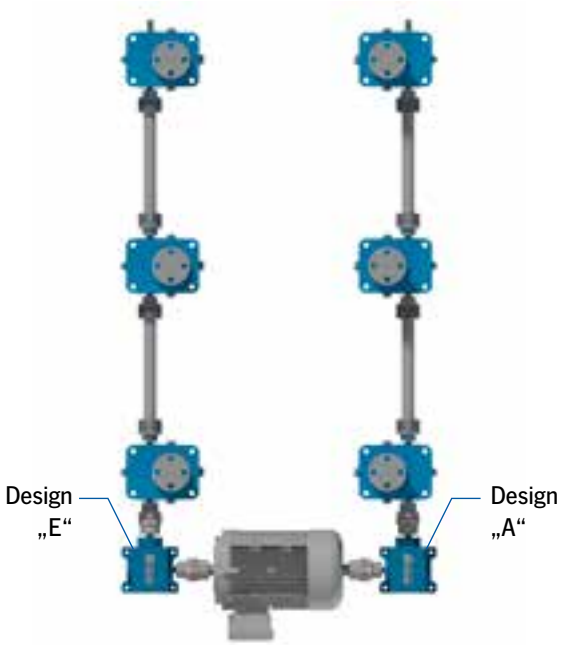

Single drive unit – electrically synchronized

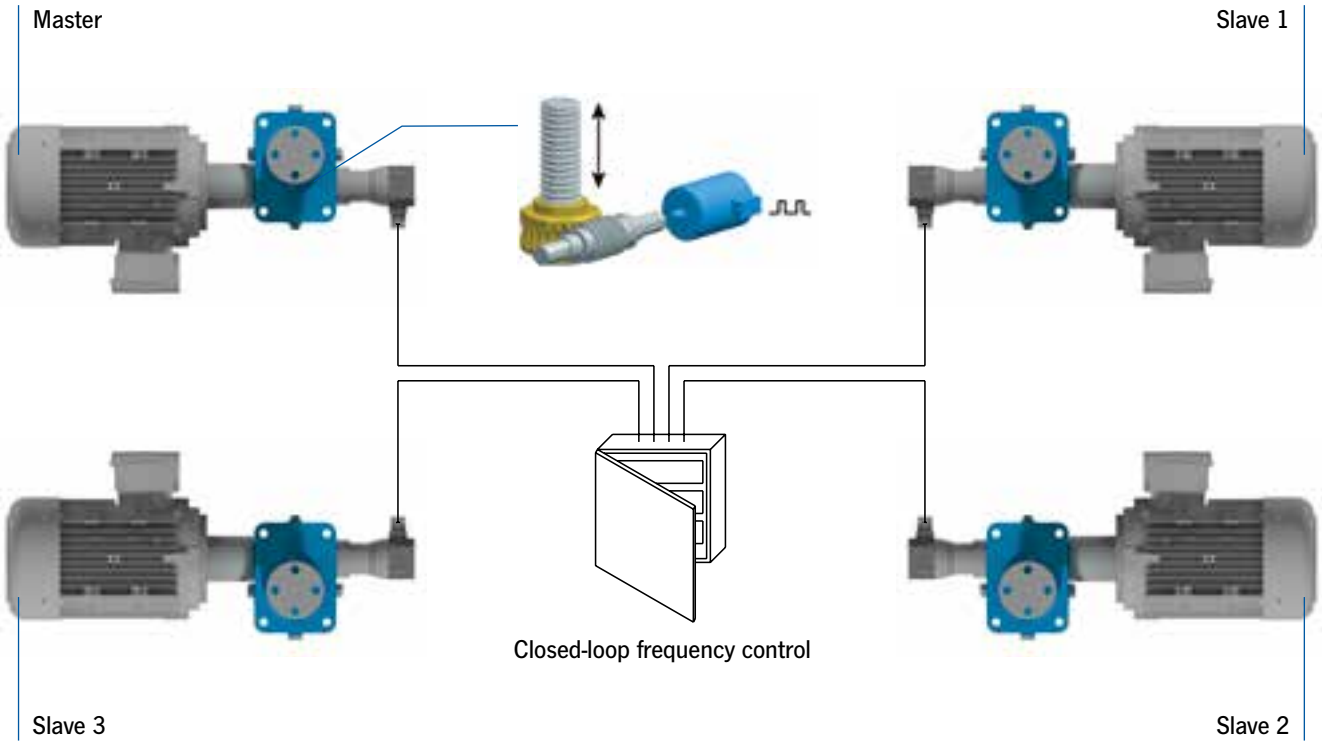

General

Columbus McKinnon
Questionnaire

Questionnaire

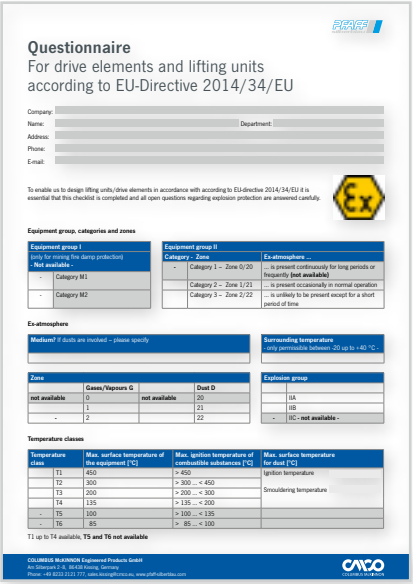

Questionnaire
For drive elements and lifting units
according to EU-Directive 2014/34/EU

Company:
Name: Department:
Address:
Phone:
E-mail:

To enable us to design lifting units/drive elements in accordance with according to EU-directive 2014/34/EU it is essential that this checklist is completed and all open questions regarding explosion protection are answered carefully.

Equipment group, categories and zones

Equipment group I (only for mining fire damp protection) - Not available -	
-	Category M1
-	Category M2

Equipment group II Category – Zone		Ex-atmosphere ...
-	Category 1 – Zone 0/20	... is present continuously for long periods or frequently **(not available)**
	Category 2 – Zone 1/21	... is present occasionally in normal operation
	Category 3 – Zone 2/22	... is unlikely to be present except for a short period of time

Ex-atmosphere

Medium? If dusts are involved – please specify

Surrounding temperature
- only permissible between -20 up to +40 °C -

Zone	Gases/Vapours G		Dust D
not available	0	not available	20
	1		21
-	2		22

Explosion group	
	IIA
	IIB
-	IIC - not available -

Temperature classes

Temperature class		Max. surface temperature of the equipment [°C]	Max. ignition temperature of combustible substances [°C]	Max. surface temperature for dust [°C]
	T1	450	> 450	Ignition temperature
	T2	300	> 300 ... < 450	
	T3	200	> 200 ... < 300	Smouldering temperature
	T4	135	> 135 ... < 200	
-	T5	100	> 100 ... < 135	
-	T6	85	> 85 ... < 100	

T1 up to T4 available, **T5 and T6 not available**

COLUMBUS McKINNON Engineered Products GmbH
Am Silberpark 2-8, 86438 Kissing, Germany
Phone: +49 8233 2121 777, sales.kissing@cmco.eu, www.pfaff-silberblau.com

ATEX

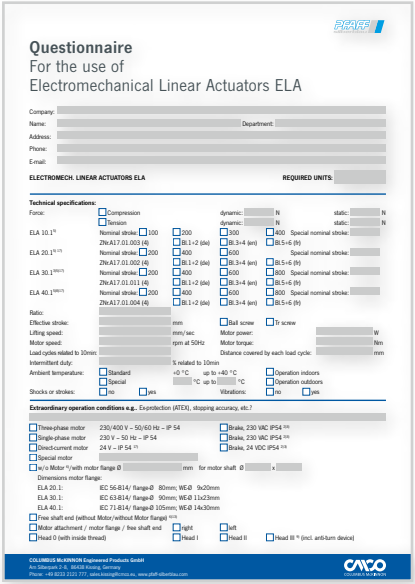

Questionnaire
For the use of
Electromechanical Linear Actuators ELA

Company:
Name: Department:
Address:
Phone:
E-mail:

ELECTROMECH. LINEAR ACTUATORS ELA **REQUIRED UNITS:**

Technical specifications:
Force: ☐ Compression ☐ Tension — dynamic: N static: N; dynamic: N static: N
ELA 10.1[1] Nominal stroke: ☐ 100 ☐ 200 ☐ 300 ☐ 400 Special nominal stroke:
ZNcA17.01.003 (4) ☐ BL1-2 (die) ☐ BL3-4 (en) ☐ BL5-6 (fr)
ELA 20.1[1] [2] Nominal stroke: ☐ 200 ☐ 400 ☐ 600 Special nominal stroke:
ZNcA17.01.002 (4) ☐ BL1-2 (die) ☐ BL3-4 (en) ☐ BL5-6 (fr)
ELA 30.1[1] [2] Nominal stroke: ☐ 200 ☐ 400 ☐ 600 ☐ 800 Special nominal stroke:
ZNcA17.01.011 (4) ☐ BL1-2 (die) ☐ BL3-4 (en) ☐ BL5-6 (fr)
ELA 40.1[1] [2] Nominal stroke: ☐ 200 ☐ 400 ☐ 600 ☐ 800 Special nominal stroke:
ZNcA17.01.004 (4) ☐ BL1-2 (die) ☐ BL3-4 (en) ☐ BL5-6 (fr)
Ratio:
Effective stroke: mm ☐ Ball screw ☐ Tr screw
Lifting speed: mm/sec Motor power: W
Motor speed: rpm at 50Hz Motor torque: Nm
Load cycles related to 10min: Distance covered by each load cycle: mm
Intermittent duty: % related to 10min
Ambient temperature: ☐ Standard +0 °C up to +40 °C ☐ Operation indoors
☐ Special °C up to °C ☐ Operation outdoors
Shocks or strokes: ☐ no ☐ yes Vibrations: ☐ no ☐ yes

Extraordinary operation conditions e.g., Ex-protection (ATEX), stopping accuracy, etc.?

☐ Three-phase motor 230/400 V – 50/60 Hz – IP 54 ☐ Brake, 230 VAC IP54 [3] [4]
☐ Single-phase motor 230 V – 50 Hz – IP 54 ☐ Brake, 230 VAC IP54 [3] [4]
☐ Direct-current motor 24 V – IP 54 [1] ☐ Brake, 24 VDC IP54 [3] [4]
☐ Special motor
☐ w/o Motor [1] with motor flange Ø mm for motor shaft Ø x
Dimensions motor flange:
ELA 20.1: IEC 56-B14/ flange-Ø 80mm; WEØ 9x20mm
ELA 30.1: IEC 63-B14/ flange-Ø 90mm; WEØ 11x23mm
ELA 40.1: IEC 71-B14/ flange-Ø 105mm; WEØ 14x30mm
☐ Free shaft end (without Motor/without Motor flange) [5] [6]
☐ Motor attachment / motor flange / free shaft end ☐ right ☐ left
☐ Head 0 (with inside thread) ☐ Head I ☐ Head II ☐ Head III [8] (incl. anti-turn device)

COLUMBUS McKINNON Engineered Products GmbH
Am Silberpark 2-8, 86438 Kissing, Germany
Phone: +49 8233 2121 777, sales.kissing@cmco.eu, www.pfaff-silberblau.com

ELA

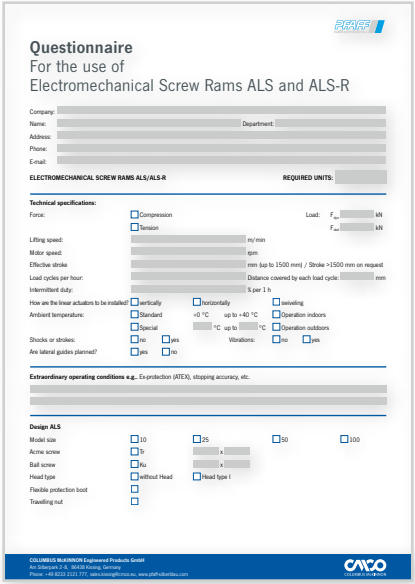

Questionnaire
For the use of
Electromechanical Screw Rams ALS and ALS-R

Company:
Name: Department:
Address:
Phone:
E-mail:

ELECTROMECHANICAL SCREW RAMS ALS/ALS-R **REQUIRED UNITS:**

Technical specifications:
Force: ☐ Compression ☐ Tension Load: F_{zul} kN; F_{zul} kN
Lifting speed: m/min
Motor speed: rpm
Effective stroke mm (up to 1500 mm) / Stroke >1500 mm on request
Load cycles per hour: Distance covered by each load cycle: mm
Intermittent duty: % per 1 h
How are the linear actuators to be installed? ☐ vertically ☐ horizontally ☐ swiveling
Ambient temperature: ☐ Standard +0 °C up to +40 °C ☐ Operation indoors
☐ Special °C up to °C ☐ Operation outdoors
Shocks or strokes: ☐ no ☐ yes Vibrations: ☐ no ☐ yes
Are lateral guides planned? ☐ yes ☐ no

Extraordinary operating conditions e.g., Ex-protection (ATEX), stopping accuracy, etc.

Design ALS
Model size ☐ 10 ☐ 25 ☐ 50 ☐ 100
Acme screw ☐ Tr x
Ball screw ☐ Ku x
Head type ☐ without Head ☐ Head type I
Flexible protection boot ☐
Travelling nut ☐

COLUMBUS McKINNON Engineered Products GmbH
Am Silberpark 2-8, 86438 Kissing, Germany
Phone: +49 8233 2121 777, sales.kissing@cmco.eu, www.pfaff-silberblau.com

ALS

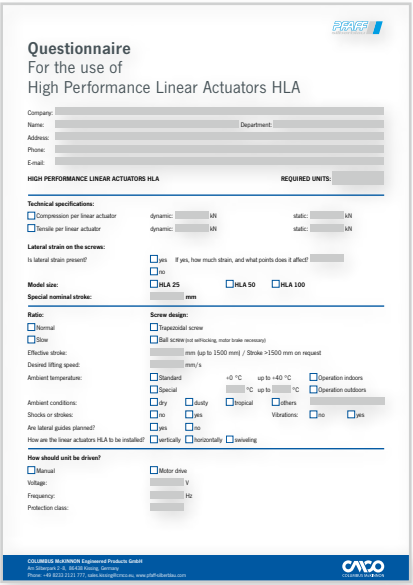

Questionnaire
For the use of
High Performance Linear Actuators HLA

Company:
Name: Department:
Address:
Phone:
E-mail:

HIGH PERFORMANCE LINEAR ACTUATORS HLA **REQUIRED UNITS:**

Technical specifications:
☐ Compression per linear actuator dynamic: kN static: kN
☐ Tensile per linear actuator dynamic: kN static: kN

Lateral strain on the screws:
Is lateral strain present? ☐ yes If yes, how much strain, and what points does it affect?
☐ no

Model size: ☐ HLA 25 ☐ HLA 50 ☐ HLA 100
Special nominal stroke: mm

Ratio:
☐ Normal
☐ Slow

Screw design:
☐ Trapezoidal screw
☐ Ball screw (not self-locking, motor brake necessary)

Effective stroke: mm (up to 1500 mm) / Stroke >1500 mm on request
Desired lifting speed: mm/s
Ambient temperature: ☐ Standard +0 °C up to +40 °C ☐ Operation indoors
☐ Special °C up to °C ☐ Operation outdoors
Ambient conditions: ☐ dry ☐ dusty ☐ tropical ☐ others
Shocks or strokes: ☐ no ☐ yes Vibrations: ☐ no ☐ yes
Are lateral guides planned? ☐ yes ☐ no
How are the linear actuators HLA to be installed? ☐ vertically ☐ horizontally ☐ swiveling

How should unit be driven?
☐ Manual ☐ Motor drive
Voltage: V
Frequency: Hz
Protection class:

COLUMBUS McKINNON Engineered Products GmbH
Am Silberpark 2-8, 86438 Kissing, Germany
Phone: +49 8233 2121 777, sales.kissing@cmco.eu, www.pfaff-silberblau.com

HLA

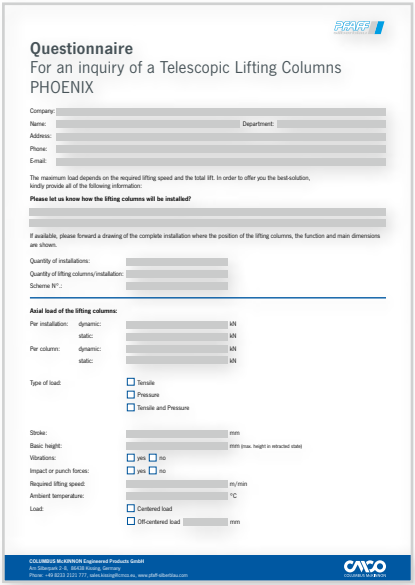

Questionnaire
For an inquiry of a Telescopic Lifting Columns
PHOENIX

Company:
Name: Department:
Address:
Phone:
E-mail:

The maximum load depends on the required lifting speed and the total lift. In order to offer you the best-solution, kindly provide all of the following information:

Please let us know how the lifting columns will be installed?

If available, please forward a drawing of the complete installation where the position of the lifting columns, the function and main dimensions are shown.

Quantity of installations:
Quantity of lifting columns/installation:
Scheme N°.:

Axial load of the lifting columns:
Per installation: dynamic: kN
static: kN
Per column: dynamic: kN
static: kN

Type of load: ☐ Tensile
☐ Pressure
☐ Tensile and Pressure

Stroke: mm
Basic height: mm (max. height in retracted state)
Vibrations: ☐ yes ☐ no
Impact or punch forces: ☐ yes ☐ no
Required lifting speed: m/min
Ambient temperature: °C
Load: ☐ Centered load
☐ Off-centered load mm

COLUMBUS McKINNON Engineered Products GmbH
Am Silberpark 2-8, 86438 Kissing, Germany
Phone: +49 8233 2121 777, sales.kissing@cmco.eu, www.pfaff-silberblau.com

PHOENIX

Columbus McKinnon
Further information

Videos

Whether in production, in the flow of goods, in the transport chain or in maintenance – there is always something to optimise somewhere. We have the right products to make good processes even better, safer and more efficient.

Our motion technology specialists have further optimised a system lifting unit for large-scale industrial production: the 500-ton lifting unit offers a drive solution for adjusting zinc pots with 100 percent availability and minimises the downtimes of strip galvanising lines.

All videos from Pfaff-silberblau and the other Columbus McKinnon brands under this QR code.

Pfaff-silberblau – Product overview of motion and lifting technology

Pfaff-silberblau – 500-ton lifting unit for the adjustment of zinc furnaces

Columbus McKinnon
Catalogue overview

Catalogue overview

Not enough power to move your load? Then solutions from Columbus McKinnon Engineered Products GmbH can help you. They move, lift and position a wide variety of goods absolutely reliably, safely and efficiently.

Experience pays off here. For over 150 years, Pfaff-silberblau brand products have been developed further and adapted continuously to current market and customer requirements. You too will find the right products in our catalogues.

Lifting technology:
The manual and electrical wire rope winches are virtually predestined for work in industry and the event sector. Lifting tables are used in many industrial sectors, support production as well as logistics and enable ergonomic working.

Motion technology:
The motion technology products are characterised by versatility. With them, the right technical solution can be found for every application.

All brochures from Pfaff-silberblau under this QR code.

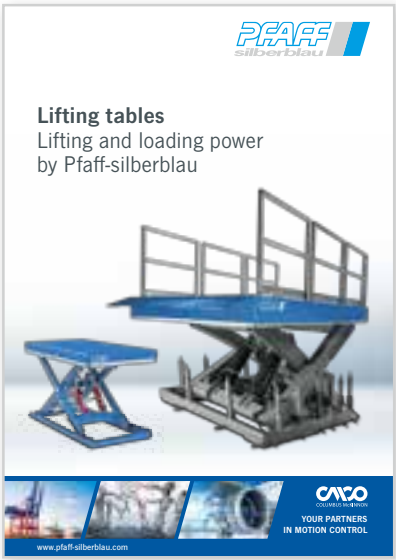

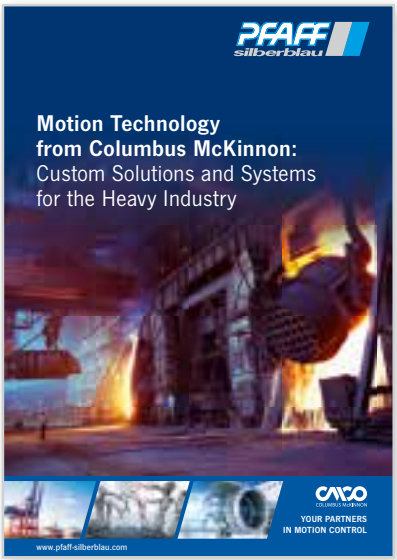

Technical changes reserved. No warranty for print errors or mistakes. Valid as of 09/2022. Reprint and any reproduction, even in excerpts, only with written consent of Columbus McKinnon Engineered Products GmbH, Kissing.

MIX
Papier aus verantwortungsvollen Quellen
FSC® C100493
FSC www.fsc.org

klimaneutral gedruckt
www.klima-druck.de
ID-Nr. 22111612
bvdm.

CMCO GREEN TEAM

COLUMBUS McKINNON
PFAFF silberblau
Duff-Norton

www.pfaff-silberblau.com

COLUMBUS McKINNON
Engineered Products GmbH
Am Silberpark 2-8
86438 Kissing, Germany
Phone: +49 8233 2121 777
Fax: +49 8233 2121 885
sales.kissing@cmco.eu

Qualitätsmanagement DQS ISO 9001
Reg.-Nr. 054396 QM15

BLUecoMPETENCE
Alliance Member
Partner of the Engineering Industry Sustainability Initiative

192094915 09/2022 EN