Unidrive M400

Fast set-up and diagnostics with real-text display, integrated PLC and safety inputs

0.25 kW - 110 kW Heavy Duty (0.33 hp - 150 hp)
100 V | 200 V | 400 V | 575 V | 690 V

Control Techniques™

EMERSON™
Industrial Automation

Unidrive M
Optimized throughput, open automation systems, maximum ease of use

Led by the results of extensive customer-driven market research, we have tailored six Unidrive M feature-sets to specific application needs identified within industrial automation.The Unidrive M400 adds useful networking capability, additional I/O and improved motor control performance for open loop applications to the family. It also provides an easy upgrade for existing Commander SK users.

For more information on the full Unidrive M family, please download the Unidrive M Drives for Industry brochure or the 'Discover Unidrive M' App (available on the App Store, Android and online) via www.UnidriveM.com.

N1652

E171230

RoHS Compliant

Unidrive M400 features

Optional AI-485 Adaptor for RS485 communications

Optional AI-Back-up Adaptor allows the drive to use an SD card for parameter cloning and acts as an input for 24 V back-up. Optional AI- Smart Adaptor has built-in memory for parameter cloning and 24 V backup

Optional CI-Keypad - intuitive plain text multilingual back-lit LCD keypad for rapid set-up and superior diagnostics

Optional IP66 (NEMA 4) Remote Keypad available for flexible mounting

Power-on / drive status LED

Dual onboard Safe Torque Off (STO) terminals for easy SIL3 conformity

Conventional surface and DIN rail mounting (DIN rail mounting available on size 1 and 2 only)***

Drive rated to IP21 / UL open class (NEMA 1) on size 1 to 4 as standard

Conduit kits are available to meet UL Type 1 rating

User-friendly control connections

Easy-to-disconnect internal EMC filter*

User-friendly power connections*

Easy-to-remove terminal cover with tool-less close system (patent pending)

Robust cable management system providing grounding point for shielded control and power cables

Typical System Integration (SI) option module**

System Integration (SI) module slot for optional communications and additional I/O**

*Features and their locations vary on some drive sizes

** Frame 2 upwards

***Additional fixings recommended where heavy vibration is expected

Unidrive M400

Fast set-up and diagnostics with plain text display, integrated PLC and safety inputs

Unidrive M400 minimizes downtime with an intuitive LCD keypad offering a real-text, multi-language display for rapid set-up and clear diagnostic help. The integrated PLC can execute a substantial range of sequencing and logic programs. Coupled with an impressive I/O count complete with two STO inputs and an SI interface for a fieldbus option or extended I/O, this feature set ensures M400's flexible integration with any system.

Minimize downtime and system set-up time with advanced keypad options

- Informative, multi-language, 3 line display aids set up and provides diagnostic information
- 4 navigation buttons facilitate intuitive navigation and programming
- Keypad options available:
  - CI-Keypad - drive mounted LCD keypad
  - Remote IP66 Keypad – rapid panel mount (1 x 32mm Ø hole)
  - No keypad - programming and control can be achieved via AI-485, CI-485 or fieldbuses such as SI-Profibus

Reduce system costs by directly integrating with applications

- M400 incorporates an onboard PLC which can execute Engineering Control Studio (IEC61131-3) programs for logic and sequencing with real-time tasks - removing the need for additional PLCs
- Fit an SI module to add fieldbus communications or additional I/O

Improve throughput with advanced open loop motor control algorithms

- Rotor Flux Control (RFC-A) gives maximum stability and control of induction motors at all powers
- 180 % motor overload suitable for heavy industrial machinery applications
- Precise frequency following is possible from an encoder or frequency input

Conform to safety standards, maximize uptime and reduce costs by integrating directly with safety systems

- M400 has integrated dual STO inputs for SIL3 / PLe conformity, eliminating the need for external components

Energy saving

With energy costs a key factor in many industries, Unidrive M400 is packed with features to enhance energy efficiency:

- Low power standby mode for applications where drives can sit idle for significant periods
- Automatic 3-speed cooling fan keeps energy usage and acoustic noise to a minimum by intelligently responding to load and environmental conditions*
- Square law V/F mode is optimized for quadratic loads like pumps and fans to keep motor losses to a minimum
- Dynamic V to F mode keeps energy usage and motor losses to a minimum in low load conditions
- Unidrive M400 is highly efficient (above 98 %)

*From 0.37 kW

Engineering Control Studio software

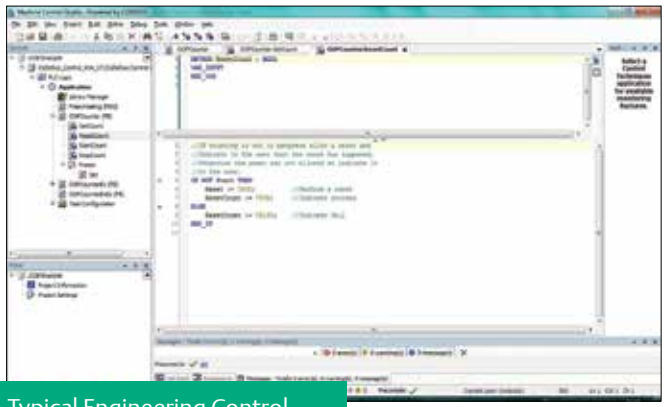

Typical Engineering Control Studio screen shot

You can download Engineering Control Studio from the software section of the Control Techniques website

Unidrive M400's onboard PLC is programmed using Engineering Control Studio which provides a flexible and intuitive environment for programming.

IEC 61131-3 automation programming

The programming environment is fully IEC 61131-3 compliant and therefore familiar, fast and easy to use for control engineers around the world.

The following IEC 61131-3 programming languages are supported:

- Structured Text (ST)
- Function Block Diagram (FBD)
- Structured Function Chart (SFC)
- Ladder Diagram (LD)
- Instruction List (IL)

Also supported:

- Continuous Function Chart (CFC)

Intuitive IntelliSense functionality helps to write consistent and robust programs, speeding up software development.

Programmers have access to a vibrant open-source community for function blocks. Engineering Control Studio also supports customers' own function block libraries, with on-line monitoring of program variables with user defined watch windows and help for on-line change of programs, in line with latest PLC practices.

Performance motor control

Unidrive M400 combines the latest microprocessor technology with unique motor control algorithms to give maximum stability of induction motors at all powers. Current loop update rates up to 125 µs and complementary intelligent control features ensure that machine throughput and energy efficiency are maximized in all industrial applications.

Motor control modes include:

Control Mode	Features
Enhanced open loop Rotor Flux Control for induction motors (RFC-A)	High performance speed and torque control through an advanced vector algorithm, utilizing closed loop current control to greatly enhance performance for all induction motor sizes without the need for a feedback device
Open loop vector or V/Hz induction motor control	Reliable performance and easy configuration: - 100 % torque available down to 1 Hz - Slip compensation - Multi-motor control - Square law V/F mode - Dynamic V/F mode

Easy motor pairing

Several intuitive tools are available to guarantee fast and optimized pairing between Unidrive M400 and AC induction motors. These include:

- Easy-to-use keypad with parameter reference guide on front panel
- Multilingual LCD remote keypad with clear parameter and diagnostic descriptions
- Three autotune procedures (stationary, rotating and inertia) to automatically optimize motor and drive configuration
- Unidrive M Connect software tool provides a comprehensive motor database and set up wizard

Unidrive M400 option choices and terminal layout

Control Mode

1. Open loop vector or V/Hz induction motor control
2. Open loop Rotor Flux Control for induction motors (RFC-A)

Input/Output

SI-I/O

- 4 x Digital I/O
- 3 x Analog inputs (default) / digital inputs
- 1 x Digital input
- 2 x Relays

Onboard

- 4 x Analog I/O
- 7 x Digital I/O
- 2 x STO
- 1 x Relay

Communications

AI-485 Adaptor

SI-EtherCAT

SI-PROFIBUS

SI-Ethernet

CI-485 Adaptor

SI-DeviceNet

SI-CANopen

SI-PROFINET

DC back-up power supply

AI-Back-up Adaptor and AI-Smart Adaptor (Input for 24 V back-up)

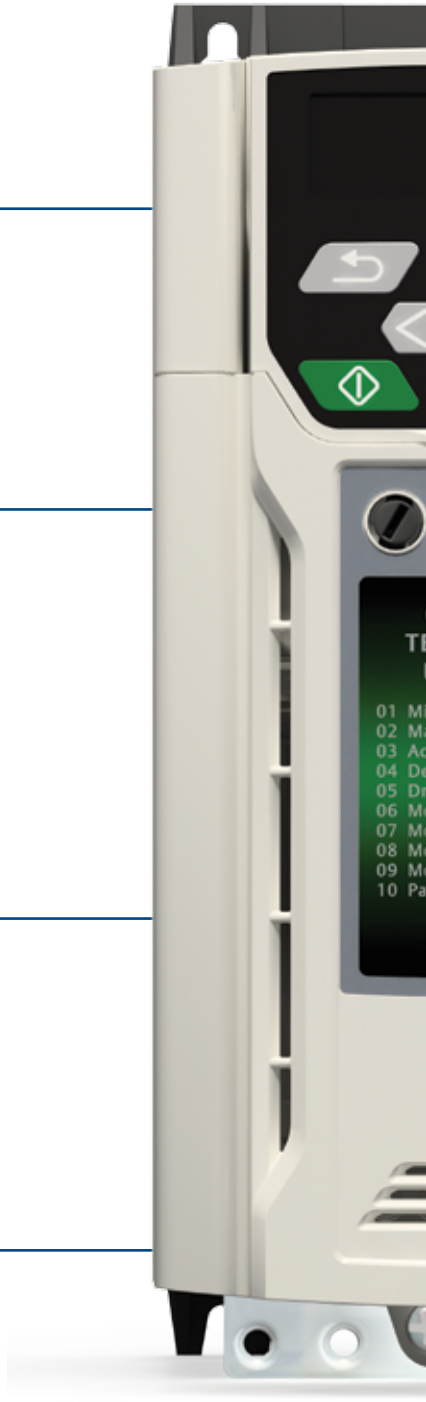

Optional Drive Programming and Operator Interface

Unidrive M Connect

Remote Keypad (LCD)

CI-keypad

Remote keypad RTC

AI-Back-up Adaptor
(provides SD card usage for programming / cloning)

AI-Smart Adaptor
(built in memory for programming / cloning)

Terminal Layout

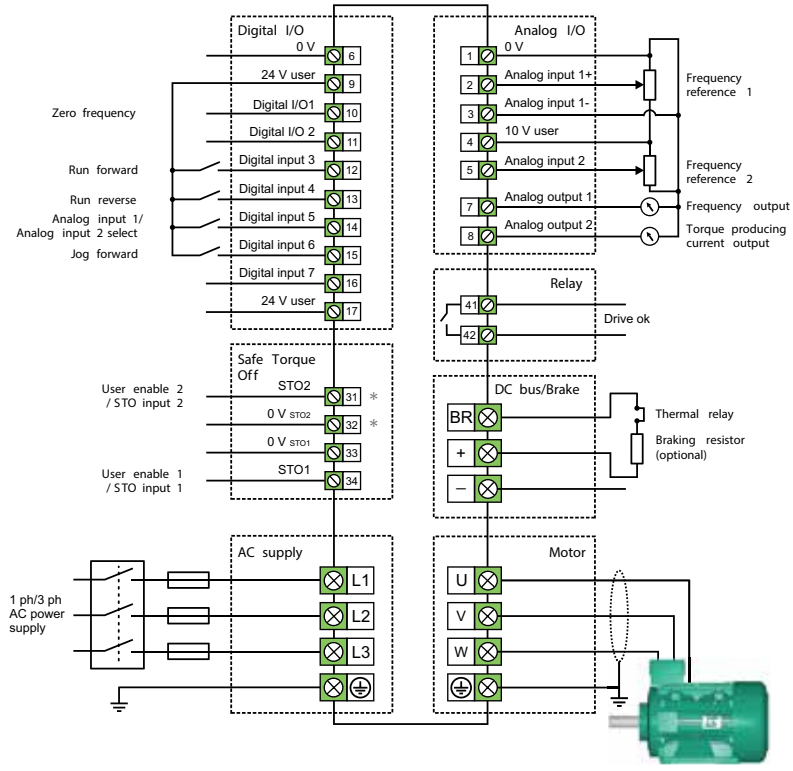

* For frame sizes 5 - 9 STO input, refer to Unidrive M400 documentation

Fast and Easy access for Commissioning, Monitoring and Diagnostics

User interface options

Unidrive M400 benefits from three optional keypad choices to meet your application needs. Unidrive M400 is quick and easy to set-up. The drive may be configured using the keypads, SD card or the commissioning software - Unidrive M Connect.

Type		Benefit
CI-Keypad		Three line plain text, multi-language LCD keypad for rapid set-up and helpful diagnostics maximizes machine up-time.
Remote Keypad		All the features of the CI-Keypad LCD, but remote mountable. This allows flexible mounting on the outside of a panel and meets IP66 (NEMA 4).
Remote keypad RTC		The keypad is remote mountable, allowing flexible mounting on the outside of a panel (meets IP54/ NEMA 12). Three line plain text, multi-language LCD keypad for rapid set-up and helpful diagnostics. Battery operated real-time clock allows accurate time stamping of events, aiding diagnostics.

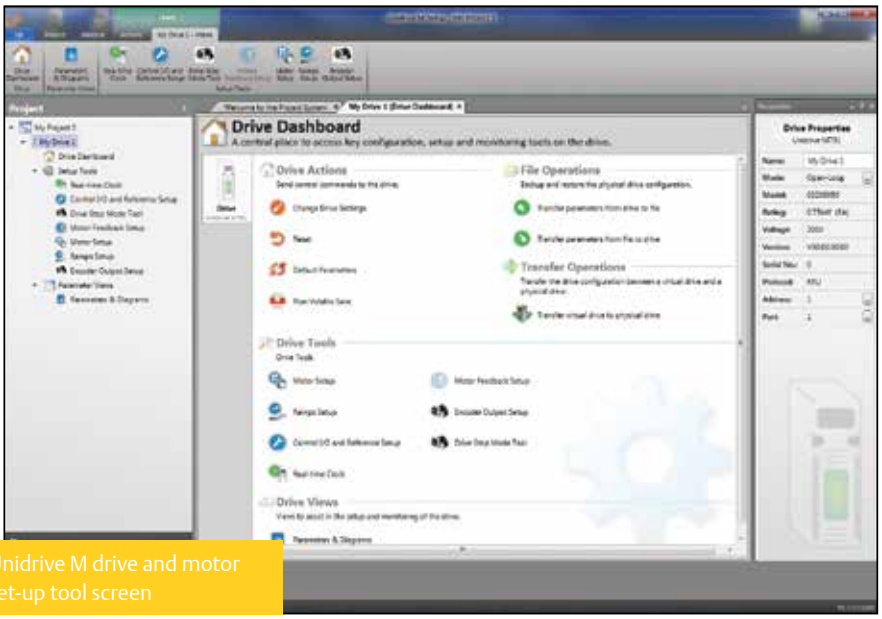

Unidrive M drive and motor set-up tool screen

Unidrive M Connect commissioning tool

The Unidrive M Connect PC tool is for commissioning, optimizing and monitoring drive/system performance. Its development draws from extensive user research, using human centered design principles to give the ultimate user experience:

- Task-based drive operations are simplified with intuitive graphical tools in a familiar Windows environment
- Dynamic drive logic diagrams and enhanced searchable listings
- Drive and motor performance can be optimized with minimal specialized drive knowledge
- Tool is scalable to match application requirements
- Supports the import of Commander SK parameter files
- Matching Unidrive M to Emerson motors can be achieved quickly and easily using Unidrive M Connect's motor database
- Drive discovery gives the ability to find drives on a network automatically without the user having to specify their addresses

Portable SD memory card

Standard SD cards can be used for quick and easy parameter and program storage using an adaptor. SD cards provide a huge memory capability allowing a system reload if required, and can be easily preprogrammed on a common PC.

Performance motor control

Control Techniques' unique motor control algorithms combined with the latest microprocessor technology ensure that Unidrive M400 offers high stability and bandwidth for many industrial motor types. This enables you to maximize application throughput and efficiency in every application using open loop AC induction motors.

Unidrive M400 ratings and specifications

100/120 Vac ±10 %							
Order Code	Supply Phases	Heavy Duty			Normal Duty		
		Max Continuous Current (A)	Motor Shaft Power (kW)	Motor Shaft Power (hp)	Max Continuous Current (A)	Motor Shaft Power (kW)	Motor Shaft Power (hp)
M400-011 00017A	1	1.7	0.25	0.33	For Normal Duty applications, use Heavy Duty ratings.		
M400-011 00024A	1	2.4	0.37	0.5			
M400-021 00042A	1	4.2	0.75	1			
M400-021 00056A	1	5.6	1.1	1.5			

200/240 Vac ±10 %							
Order Code	Supply Phases	Heavy Duty			Normal Duty		
		Max Continuous Current (A)	Motor Shaft Power (kW)	Motor Shaft Power (hp)	Max Continuous Current (A)	Motor Shaft Power (kW)	Motor Shaft Power (hp)
M400-012 00017A	1	1.7	0.25	0.33	For Normal Duty applications, use Heavy Duty ratings.		
M400-012 00024A	1	2.4	0.37	0.5			
M400-012 00033A	1	3.3	0.55	0.75			
M400-012 00042A	1	4.2	0.75	1			
M400-022 00024A	1/3	2.4	0.37	0.5			
M400-022 00033A	1/3	3.3	0.55	0.75			
M400-022 00042A	1/3	4.2	0.75	1			
M400-022 00056A	1/3	5.6	1.1	1.5			
M400-022 00075A	1/3	7.5	1.5	2			
M400-032 00100A	1/3	10	2.2	3			
M400-042 00133A	1/3	13.3	3	3			
M400-042 00176A	3	17.6	4	5			
M400-052 00250A	3	25	5.5	7.5	30	7.5	10
M400-062 00330A	3	33	7.5	10	50	11	15
M400-062 00440A	3	44	11	15	58	15	20
M400-072 00610A	3	61	15	20	75	18.5	25
M400-072 00750A	3	75	18.5	25	94	22	30
M400-072 00830A	3	83	22	30	117	30	40
M400-082 01160A	3	116	30	40	149	37	50
M400-082 01320A	3	132	37	50	180	45	60
M400-092 01760A	3	176	45	60	216	55	75
M400-092 02190A	3	219	55	75	266	75	100

380/480 Vac ±10 %							
Order Code	Supply Phases	Heavy Duty			Normal Duty		
		Max Continuous Current (A)	Motor Shaft Power (kW)	Motor Shaft Power (hp)	Max Continuous Current (A)	Motor Shaft Power (kW)	Motor Shaft Power (hp)
M400-024 00013A	3	1.3	0.37	0.5	For Normal Duty applications, use Heavy Duty ratings.		
M400-024 00018A	3	1.8	0.55	0.75			
M400-024 00023A	3	2.3	0.75	1			
M400-024 00032A	3	3.2	1.1	1.5			
M400-024 00041A	3	4.1	1.5	2			
M400-034 00056A	3	5.6	2.2	3			
M400-034 00073A	3	7.3	3	3			
M400-034 00094A	3	9.4	4	5			
M400-044 00135A	3	13.5	5.5	7.5			
M400-044 00170A	3	17	7.5	10			
M400-054 00270A	3	27	11	20	30	15	20
M400-054 00300A	3	30	15	20	30	15	20
M400-064 00350A	3	35	15	25	38	18.5	25
M400-064 00420A	3	42	18.5	30	48	22	30

M400-064 00470A	3	47	22	30	63	30	40
M400-074 00660A	3	66	30	50	79	37	50
M400-074 00770A	3	77	37	60	94	45	60
M400-074 01000A	3	100	45	75	112	55	75
M400-084 01340A	3	134	55	100	155	75	100
M400-084 01570A	3	157	75	125	184	90	125
M400-094 02000A	3	200	90	150	221	110	150
M400-094 02240A	3	224	110	150	266	132	200

500/575 Vac ±10 %

Drive	Supply Phases	Heavy Duty			Normal Duty		
		Max Continuous Current (A)	Typical Output (kW)	Motor Power (hp)	Max Continuous Current (A)	Typical Output (kW)	Motor Power (hp)
M400-055 00030 A	3	3	1.5	2	3.9	2.2	3
M400-055 00040 A	3	4	2.2	3	6.1	4	5
M400-055 00069 A	3	6.9	4	5	10	5.5	7.5
M400-065 00100 A	3	10	5.5	7.5	12	7.5	10
M400-065 00150 A	3	15	7.5	10	17	11	15
M400-065 00190 A	3	19	11	15	22	15	20
M400-065 00230 A	3	23	15	20	27	18.5	25
M400-065 00290 A	3	29	18.5	25	34	22	30
M400-065 00350 A	3	35	22	30	43	30	40
M400-075 00440 A	3	44	30	40	53	37	50
M400-075 00550 A	3	55	37	50	73	45	60
M400-085 00630 A	3	63	45	60	86	55	75
M400-085 00860 A	3	86	55	75	108	75	100
M400-095 01040 A	3	104	75	100	125	90	125
M400-095 01310 A	3	131	90	125	150	110	150

500/690 Vac ±10 %

Drive	Supply Phases	Heavy Duty			Normal Duty		
		Max Continuous Current (A)	Typical Output (kW)	Motor Power (hp)	Max Continuous Current (A)	Typical Output (kW)	Motor Power (hp)
M400-076 00190 A	3	19	15	20	23	18.5	25
M400-076 00240 A	3	24	18.5	25	30	22	30
M400-076 00290 A	3	29	22	30	36	30	40
M400-076 00380 A	3	38	30	40	46	37	50
M400-076 00440 A	3	44	37	50	52	45	60
M400-076 00540 A	3	54	45	60	73	55	75
M400-086 00630 A	3	63	55	75	86	75	100
M400-086 00860 A	3	86	75	100	108	90	125
M400-096 01040 A	3	104	90	125	125	110	150
M400-096 01310 A	3	131	110	150	150	132	175

See overleaf for Normal Duty and Heavy Duty definitions.

Key:

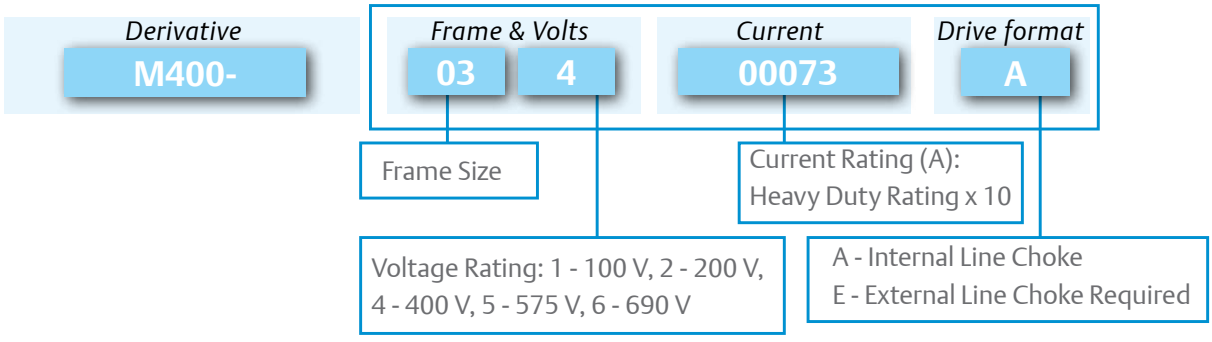

Unidrive M400 ratings and specifications

Environmental safety and electrical conformance

- **Size 1 to 4:**
  IP21 / UL open class (NEMA 1). IP20 when the AI-Back-up or AI-485 Adaptors are fitted.
  UL TYPE 1 compliance requires the appropriate conduit kit to be fitted.
- Ambient temperature -20 °C (4 °F) to 40 °C (104 °F) as standard. 60 °C/ 140 °F with derating for frames 1-4.
- **Size 5 to 9:**
  IP20 / UL open class (NEMA 1). UL TYPE 1 compliance requires the appropriate conduit kit to be fitted.
  IP65 / UL TYPE 12 rating is achieved on the rear of the drive when through panel mounted.
- Ambient temperature -20 °C (4 °F) to 40 °C (104 °F) as standard. 55°C/ 131 °F with derating for frames 5-9
- Storage temperature -40 °C to 60 °C (-40 °F to 140 °F).
- Humidity 95 % maximum (non-condensing) at 40 °C (104 °F) in accordance with EN/IEC 60068-2-78 and ANSI/EIA-364-31.
- EN/IEC 60068-2-60, Method 4 Corrosive gas.
- Altitude: 0 to 3000 m (0 to 9843 ft), derate 1 % per 100 m (328 ft) between 1000 m and 3000 m (3281 ft and 9843 ft).
- Random Vibration: Tested in accordance with EN/IEC 60068-2-64 with SI and AI option modules fitted.
- Mechanical Shock: Tested in accordance with EN/IEC 60068-2-29.
- Electromagnetic Immunity complies with EN/IEC 61800-3 and EN/IEC 61000-6-2.
- With onboard EMC filter, complies with EN/IEC 61800-3 (2nd environment).
- EN/IEC 61000-6-3 and EN/IEC 61000-6-4 with optional footprint EMC filter.
- EN/IEC 61800-5-1 Electrical Safety.
- EN/IEC 61131-2 I/O.
- Safe Torque Off, independently assessed by TÜV to EN/IEC 61800-5-2 SIL3 and EN ISO 13849-1 PLe.
- UL 508C Electrical Safety.

Unidrive M400 features and specification table

Performance	Current loop update: 125 µs
	Heavy Duty peak rating: 180 % (3 s), 150 % (60 s)
	Maximum output frequency: 550 Hz
	Switching frequency range: 0.67, 1, 2, 3, 4, 6, 8, 12, 16 kHz (3 kHz default)
Onboard intelligence	Programmable Logic Control (PLC) - memory: 16 kB
	1 x Real-time task (16ms), 1 x Background task
Mechanical attributes	DIN rail mountable (size 1 and 2)
	Commander SK compatible mechanical footprint either as standard or with conversion plates
Parameter back-up	Serial port cloning (using optional AI-485 Adaptor or CI-485 Adaptor)
	SD card (using optional AI-Back-up Adaptor)
Follower	Encoder Input 1
Onboard I/O	2 x Analog inputs, 2 x Analog outputs
	5 x Digital inputs, 2 x Bidirectional digital inputs or outputs
	1 x Relay output
Machine safety	2 x Safe Torque Off (STO) inputs
Back-up power	24 V control back-up (using optional AI-Back-up Adaptor) AI-Smart Adaptor (Built-in memory for parameter cloning and 24 V backup)
Other	Temperature controlled fan with standby (off)
	User replaceable fan(s)
	Conformal coating
	Standby mode (energy saving)
	User defined security levels (e.g. restricted access or read-only parameters via user defined security code)

Unidrive M operating modes

Operating mode	RFC from cold	RFC from 100 %	Open loop from cold	Open loop from 100 %
Normal duty overload with motor rated current = drive rated current	110 % for 165 s	110 % for 9 s	110 % for 165 s	110 % for 9 s
Heavy duty overload with motor rated current = drive rated current (size 8 and below)	180 % for 3 s	180 % for 3 s	150 % for 60 s	150 % for 8 s
Heavy duty overload with motor rated current = drive rated current (size 9)	175 % for 42 s	175 % for 5 s	150 % for 60 s	150 % for 7 s

Dimensions and Weight

Frame Size		1	2	3	4	5	6	7	8	9A	9E
Dimensions (H x W x D)	mm	137x75x130	180x75x150	200x90x160	245x115x175	379x141x192	379x210x221	548x270x280	785x310x290	1108x310x290	1069x310x290
	in	5.4x3.0x5.1	7.1x3.0x5.9	7.9x3.5x6.3	9.7x4.5x6.9	14.9x5.6x7.9	14.9x8.3x8.9	21.6x10.6x11.0	30.9x12.2x11.4	43.6x12.2x11.4	42.1x12.2x11.4
Weight	kg (lb)	0.75(1.65)	1.0(2.2)	1.5(3.3)	3.13(6.9)	7.4(16.3)	14(30.9)	28(61.7)	50(110.2)	66.5(146.6)	46(101.4)

Notes:
Height dimension (H) does not include mounting feet on sizes 1 to 4.
Additional distance should be added to the height dimension (H) when the following options are fitted:

- AI-Back-up Adaptor: 15 mm (0.59 in)
- AI-485 Adaptor: 26 mm (1.02 in)
- AI- Smart Adaptor: 15 mm (0.59 in)

Optional keypad

Description/Order code	Order code
Remote Keypad	82500000000001
CI-keypad	82500000000000
Remote keypad RTC	82400000019600

Optional accessories

Description/Order code	Order code
AI-Back-up Adaptor	82500000000004
AI-485 Adaptor	82500000000003
AI-Smart Adaptor	82500000018500
CI-485 Adaptor	82500000000002

Through hole IP65 kit

IP65 / UL TYPE 12 rating is achieved on the rear of the drive when through panel mounted using the following kits.

Frame size	Order code
5	3470-0067
6	3470-0055
7	3470-0079
8	3470-0083
9A	3470-0119
9E	3470-0105

UL Type 1 Conduit kit

Frame size	Order code
1	3470-0091
2	3470-0094
3	3470-0098
4	3470-0102
5	3470-0069
6	3470-0059
7	3470-0080
8 / 9A	3470-0088
9E	3470-0115

Retrofit mounting brackets

These mounting brackets ensure the drive can be mounted on existing Commander SK installations.

Frame size	Order code
3	3470-0097
4	3470-0101
5	3470-0066
6	3470-0074
7	3470-0078
8	3470-0088
9A / 9E	3470-0118

Line reactor

Frame size	Order code
9E (200 V/400 V)	4401-0181
9E (575 V/600 V)	4401-0183

Finger-guard grommet

Frame size	Order code
9A / 9E	3470-0107

Lifting tool

Frame size	Order code
9A	7778-0045
9E	7778-0016

Fan replacement kit

Frame size	Order code
1	3470-0092
2	3470-0095
3	3470-0099
4	3470-0103

Optional external EMC filters

Unidrive M built-in EMC filter complies with EN/IEC 61800-3. External EMC filters are required for compliance with EN/IEC 61000-6-4 as per the table below.

Frame size	Voltage	Phases	Type	Order code
1	All	1	Standard	4200-1000
	All	1	Low leakage	4200-1001
2	100 V	1	Standard	4200-2000
	200 V	1	Standard	4200-2001
		1	Low leakage	4200-2002
		3	Standard	4200-2003
		3	Low leakage	4200-2004
	400 V	3	Standard	4200-2005
		3	Low leakage	4200-2006
3	200 V	1	Standard	4200-3000
		1	Low leakage	4200-3001
		3	Standard	4200-3004
		3	Low leakage	4200-3005
	400 V	3	Standard	4200-3008
		3	Low leakage	4200-3009
4	200 V	1	Standard	4200-4000
		1	Low leakage	4200-4001
		3	Standard	4200-4002
		3	Low leakage	4200-4003
	400 V	3	Standard	4200-4004
		3	Low leakage	4200-4005
5	200 V	3	Standard	4200-0312
	400 V	3	Standard	4200-0402
	575 V	3	Standard	4200-0122
6	200 V	3	Standard	4200-2300
	400 V	3	Standard	4200-4800
	575 V	3	Standard	4200-3690
7	200 V & 400 V	3	Standard	4200-1132
	575 V & 690 V	3	Standard	4200-0672
8	200 V & 400 V	3	Standard	4200-1972
	575 V & 690 V	3	Standard	4200-1662
9A	200 V & 400 V	3	Standard	4200-3021
	575 V & 690 V	3	Standard	4200-1660
9E	200 V & 400 V	3	Standard	4200-4460
	575 V & 690 V	3	Standard	4200-2210

For a full list of patents and patent applications, visit www.controltechniques.com/patents.

Control Techniques™

www.emersonindustrial.com/automation

EMERSON™
Industrial Automation

© Emerson 2015. The information contained in this brochure is for guidance only and does not form part of any contract. The accuracy cannot be guaranteed as Emerson have an ongoing process of development and reserve the right to change the specification of their products without notice.

Control Techniques Limited. Registered Office: The Gro, Newtown, Powys SY16 3BE. Registered in England and Wales. Company Reg. No. 01236886.

Moteurs Leroy-Somer SAS. Headquarters: Bd Marcellin Leroy, CS 10015, 16915 Angoulême Cedex 9, France. Share Capital: 65 800 512 €, RCS Angoulême 338 567 258.

P.N. 0778-0040-06 09/15