EMERSON
Industrial Automation

en

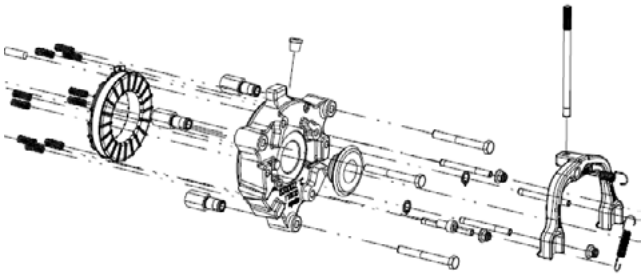

Maintenance Guide

Brake motors FFB

Reference: 5287 en - 2015.04 / a

Leroy-Somer

This document is an addition to the general manual ref. 1889 (recommendations), ref. 4850 (LSES motor), ref. 4155 (LSRPM motor), and manual ref. 5286 (FFB brake installation).

FFB brake motors are assemblies made of an asynchronous motor and a failsafe braking system (safety brake).
This brake motor benefits from the experience of a global manufacturer, using cutting edge technologies - automation, selected materials, thorough quality control - in our motor plants who have been awarded the ISO 9001 - Issue 2008 international certification.

These symbols appear in this document whenever it is important to take special precautions during installation, operation, maintenance or servicing of the brake motors.

General danger

Electrical hazard

Risk of physical injury

These recommendations, instructions and descriptions refer to standard use. They do not take account of non-standard versions or special adaptations. Failure to comply with these recommendations can lead to premature wear and tear of the motor and can invalidate the manufacturer warranty.

Make sure that the brake motor is compatible with its environment before its installation and also throughout its life.

The following preliminary precautions must be taken before working on any stationary device:
- **Mains voltage disconnected and no residual voltage present**
- **Careful examination of the causes of the stoppage** (blocked transmission - loss of phase - cut-out due to thermal protection - lack of lubrication, etc.)

Electric brake motors are industrial products. They must therefore be installed by qualified, experienced and authorized personnel. The safety of people, animals and property must be ensured when fitting the motors into machines (please refer to current standards).

Particular attention must be given to equipotential ground or earthing connections.

Safety of personnel: Protect all rotating devices before power-up. If a brake motor is started up without a coupling device having been fitted, carefully immobilize the key in its location. All measures must be taken to ensure protection against the risks which arise when there are rotating parts (coupling sleeve, pulley, belt, fan, etc.). Personal protective equipment must be worn. After work is carried out, the lids of the terminal box and its cover must always be closed.

Beware of backdriving:
- When the motor is switched off. The appropriate precautions must be taken: for example, for pumps a non-return valve must be installed.

- When the brake motor is fitted with an active brake release lock off system (DLM), **it is vital to ensure safety (of people and property) in exposed areas**.
Before any intervention on the brake, check that it holds no load.

- After an operating period, certain parts of the brake motor may be hot and are likely to cause burns.

CONTENTS

1 - IDENTIFICATION 22
1.1 - Standard nameplate 22
1.2 - Special marking 22

2 - EXPLODED VIEW AND PARTS LIST OF FFB BRAKE MOTORS 23
2.1 - Exploded view 23
2.2 - Parts list 23

3 - SPARE PARTS 23
3.1 - Procedure 23
3.2 - Brake motor spare parts 23

4 - MAINTENANCE 24
4.1 - Tooling 24
4.2 - Removing the FFB brake motor 24
4.3 - Refitting the FFB brake motor 24
4.4 - Adjusting the air gap 25

5 - CHARACTERISTICS 26
5.1 - Braking moments 26
5.2 - Electromagnets 26

6 - OPTIONS 27-32
6.1 - DLRA lever - Disassembly / Assembly 27
6.2 - DLM lever - Disassembly / Assembly 28
6.3 - DMD lever - Disassembly / Assembly 29
6.4 - Indicators (Loosening / Wear) 30
6.5 - Standard encoder (incremental, absolute) 31
6.6 - Forced ventilation 32
6.7 - Connector kit - Assembly / Disassembly 32
6.8 - Particular conditions of use 32

7 - REPAIRING GUIDE 33

8 - CONNECTION DIAGRAMS 34-36
8.1 - Motor: reminder 34
8.2 - Brake 34
8.3 - Options 34-36

9 - RECYCLING 36

en

LEROY-SOMER reserves the right to modify the characteristics of its products at any time in order to incorporate the latest technological developments. The information contained in this document is therefore liable to be changed without notice.

1 - IDENTIFICATION

1.1 - Standard plate

Motor nameplate (item 26a)

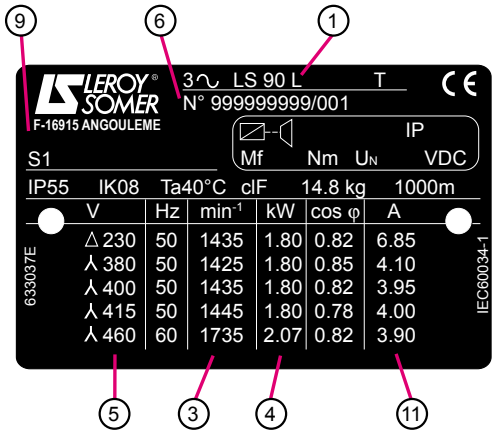

Brake nameplate (item 26b)

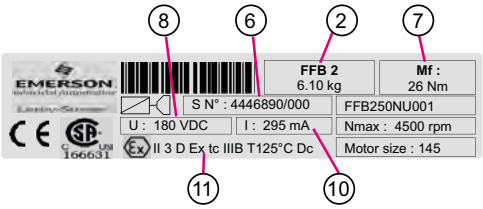

Indispensable information found on the nameplates:

①	Motor series, frame size
②	FFB brake type
③	Speed of rotation (rpm)
④	Rated power (kW)
⑤	Motor voltage (V)
⑥	Motor and brake manufacturing no.
⑦	Mf: Braking torque (N.m)
⑧	U: Brake coil voltage (VDC)
⑨	Duty - Duty (operating) factor
⑩	I: Coil current (mA)
⑪	Specific (ATEX) marking

Information to be remembered for spare part orders

Definition of symbols
T: Impregnation index
IE2: Efficiency class
IP-- IK--*: Protection indices
Ins. Cl.F: Insulation class
(Ta) 40°C: Ambient operating temperature
cos P or φ: Power factor
A: Rated current
Δ: Delta connection
⅄: Star connection

***IK: Shock resistance**
The motor can withstand a weak mechanical shock (IK 08 according to EN 50102). **The user must provide additional protection if there is a high risk of mechanical shock.**

Bearings
DE: Drive end bearing
NDE: Non drive end bearing

Marking
CE: Legal mark of conformity of product to the requirements of European Directives

: CSA certified product, UL conformity

Motor plate LSES112MU 4kW, 4p, 400V ⅄

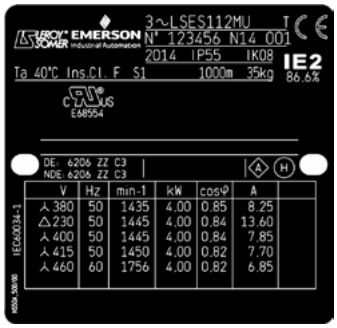

Brake motor plate with inverter LSES112MU 4kW, 4p, 400V ⅄

1.2 - Special marking

Upon receiving the brake motor, check that the information nameplate complies with contractual specifications.
(e.g. brake motor operating in dusty explosive atmospheres; in this case: non conductive dust.)

2 - EXPLODED VIEW AND PARTS LIST OF FFB BRAKE MOTORS

2.1 - FFB brake motor exploded view

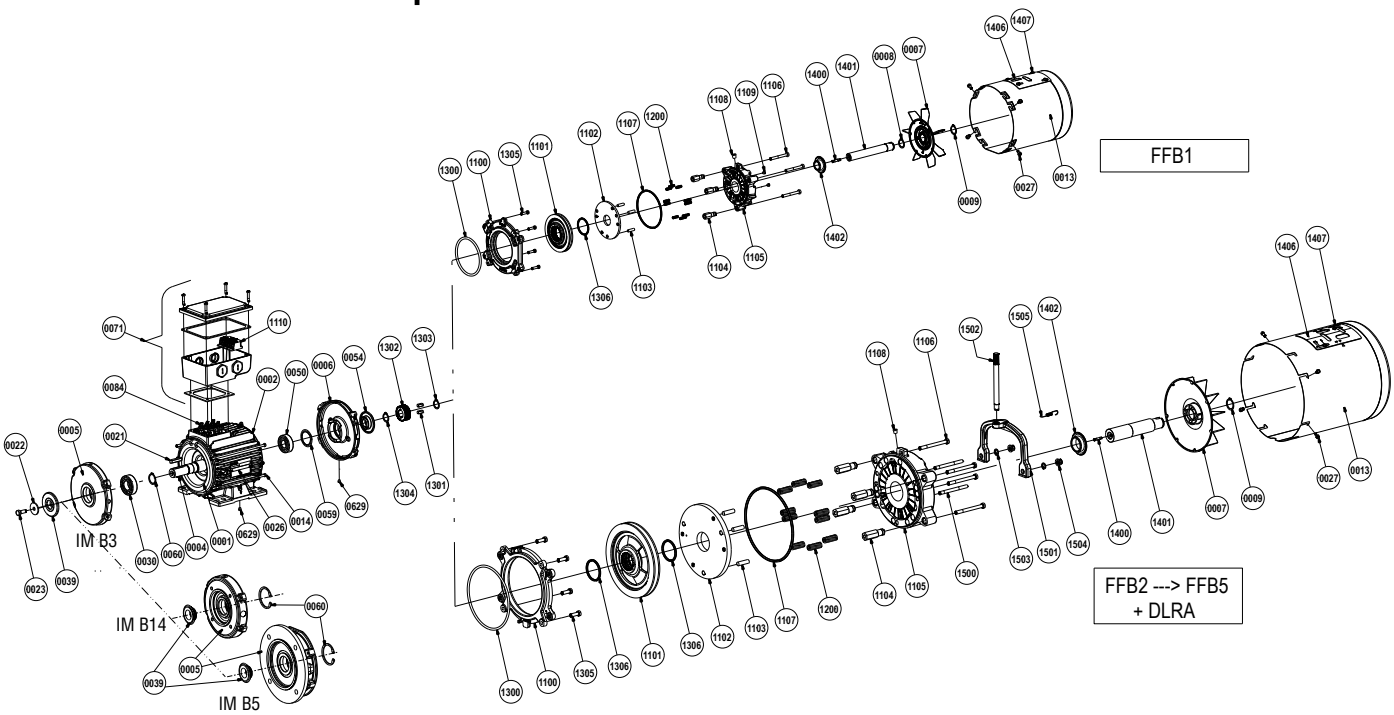

2.2 - FFB brake motor parts list

Item	Description	Qty	Item	Description	Qty	Item	Description	Qty
1	Stator	1	30	Front bearing (DE)		1108	Wire guide (item 1105)	1
2	Housing	1	39	Front sealing gasket (DE)	1	1109	Obturating cap	2
4	Rotor	1	50	Bearing brake side (NDE)	1	1110	Brake supply unit	1
5	Front shield (DE)	1	54	Sealing gasket on brake side (NDE)	1	1200	Compression spring	3 to 10
6	Back shield (NDE)	2	59	Preload washer	1	1300	O-ring (between item 6 and item 1100)	1
7	Fan	1	60	Internal circlips (DE item 30)	1	1301	Splined ring key (item 1302)	2
8	Fan spacer (item 7)	0 or 1	71	Terminal box	1	1302	Splined ring	1
9	Locking circlips (item 7)	1 or 2	84	Terminal board	1	1303	Locking circlips (item 1302)	1
13	Fan cover	1	629	Drain hole plug	1 or 2	1304	Spacer	0 or 1
14	Assembly rods	3 or 4	1100	Friction face plate	1	1305	Fixing screw (item 1100)	3 or 4
21	Shaft end key (DE)	1	1101	Brake disc	1	1306	O-ring (item 1101)	2
22	Shaft end spacer	1	1102	Armature	1	1400	Extension/shaft link screw (item 1401/4)	1
23	Tightening screw (item 22)	1	1103	Safety pins	3 or 4	1401	Extension shaft	1
25	Lifting eye (H.A. ≥ 100)	2	1104	Adjustment spacer	3 or 4	1402	VLS gasket (item 1105)	1
26a	Motor nameplate	1	1105	Brake yoke	1	1406	Cover closing hatch	1
26b	Brake nameplate	1	1106	Fixing screw (item 1105/1100)	3 or 4	1407	Fixing screw (item 1406)	4
27	Cover fixing screw (item 13)	4	1107	O-ring	1	1500 to 1505: DLRA option (see § 6.1)		
xx	*Spare part*							

3 - SPARE PARTS

3.1 - Procedure

Always indicate the following when ordering spare parts:
- complete motor type, its number and the information indicated on the information plate (refer to §1);
- serial no. of the brake information plate item 26b;
- the numbers and descriptions of the parts (record the part marks in the exploded view §2.1 and their description in the parts list §2.2).

For motors with a fixing flange, specify the flange and its dimensions (IM B5 smooth holes, IM B14 tapped holes or built-in assembly MI) and the details of the coupled reduction gear if applicable.

To ensure proper operation and safety of our brake motors, always use original manufacturer parts.

Maintenance kits are available. Refer to LSAS or the following sites:

www.leroy-somer.com

or

www.emersonindustrial.com\Services-pour-systemes-d-entrainement.aspx

Otherwise, the manufacturer shall waive any liability in case of damage.

3.2 - Spare parts

		Item (item)								
Type	Polarity	30	50	39	54	1101	1107	1300	1306	1402
LS 71 L, M	2; 4; 6	6202 C3	6201 C3							
LS 80 L	2; 4; 6	6204 C3	6203 CN							
(F)LS(ES) 80 LG	4	6205 C3	6204 C3							
(F)LS(ES) 90 SL, L	2; 4; 6	6205 C3	6204 C3							
(F)LSES 90 LU	4	6205 C3	6205 C3	gasket		disc[1]		gaskets		
(F)LS(ES) 100 L	2; 4; 6	6206 C3	6205 C3							
(F)LSES 100 LG	4	6206 C3	6205 C3							
(F)LSES 100 LR	4	6206 C3	6205 C3							
LSES 112 M	4	6206 C3	6205 C3							

		Item (item)								
Type	Polarity	30	50	39	54	1101	1107	1300	1306	1402
(F)LS(ES) 112 MG	2; 4; 6	6206 C3	6205 C3							
(F)LSES 112 MU	4	6206 C3	6206 C3							
LS(ES) 132 S, SU	2; 4; 6	6208 C3	6206 C3							
(F)LS(ES) 132 SM, M	2; 4; 6	6308 C3	6207 C3							
LSES 160 MR	4	6309 C3	6308 C3	gasket		disc[1]		gaskets		
LSES 160 MP	2 ; 4	6309 C3	6208 C3							
(F)LSES 160 M	4 ; 6	6309 C3	6210 C3							
(F)LSES 160 L, LR	4	6309 C3	6210 C3							

1. When changing the brake disc only, the braking moment is achieved only once the friction surfaces are run in.

4 - CORRECTIVE MAINTENANCE

Before any operation on the brake, always disconnect the brake motor from its power supply (Putting in writing).

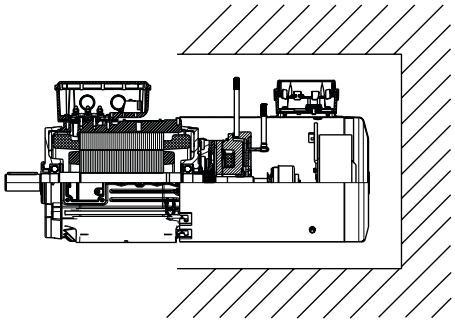

Include sufficient distance around the brake for access and intervention.

4.1 - Tooling (not supplied)

Tools	Function
Adjustment shims	Air gap adjustment
Torque wrench	Tightening for assembly of brake parts
Open end, handle, box wrench (M8/10/16, etc.)	Removal of the face plate, extension, yoke, DLRA, DLM, DMD
Special socket	Screw and unscrew the shaft end extensions
Hub puller	Splined ring removal
Bearing puller	Bearing change: refer to manual §3.2
Mallet (leather or plastic)	Lift the keys from the splined ring
Multimeter	Voltage check
Ohmmeter (indicator lamp)	Coil resistance measurement, micro-contact adjustment
Circlip pliers	Circlip removal
VLS assembly jet	Gasket fitting
Large flat blade screwdriver	Fan removal
2 threaded rods: M5 (FFB1), M6 (FFB2 and 3) and M8 (FFB4 and 5) and corresponding nuts	Refitting the armature on yoke
2 large flat blade screwdrivers	Fan removal

Always record the connections of the supply wires and options before disconnection.
Similarly, record the position of flanges with respect to the stator and the fan's direction on the rotor.

4.2 - Removing the FFB brake motor

- Remove the brake motor using appropriate tools.
- Disconnect the brake motor from its supply.
- Open the terminal box, record the wires and their position (supply of the brake motor, encoder, probes, etc.). Always record the connections of the supply wires and options before disconnection.
- Disconnect the supply wires from the motor and brake supply terminal strips (+ and - terminals).
- Disconnect the rectifier bridge and check the stator isolation (> 10 MOhms).
- If the brake is fitted with a DLRA, DLM or DMD system, unscrew the lever rod(s) (item **1502**, **1605**).
- Unscrew the cover screws **27**, remove the metal cover **13**.
- Remove the fan **7** by removing the axial locking circlips **9**.
- Extract the fan **7** using two screwdrivers as levers.
- Remove the VLS gasket **1402**.
- Unscrew the fixing screws from the yoke **1106**.
- Remove the yoke **1105** from the brake, remove the O-ring **1107**, extract the armature **1102** while recording its angular position.
- Remove the brake disc **1101** while recording the assembly direction (large hub shoulder on motor side).
- Unscrew the fixing screws **1305** from the face plate, then remove the face plate **1100**.
- Unscrew the extension **1401** while blocking the drive shaft.
- Remove the circlips **1303**.
- Extract the splined ring **1302** using a puller.
- Remove the keys **1301** from the ring.
- Find all the faulty parts to order spare parts. Refer to §2.

• **Clean the parts:**
  - by blowing the electrical parts and the brake parts **1100** to **1108** (no solvents, no humid products);
  - using a non greasy degreasing product for mechanical parts (item **1101** excepted);
  - using a scraper for joints.

• Change the gaskets and bearings. Refer to §2 and 3.

4.3 - Refitting the FFB brake motor

Clean the bleeding ports and plugs before refitting.
Verify that no pollution distorts item 1105.
Tightening screw according to NF E 25030-1 or VDI2230.

- Reverse the procedure for refitting: keys **1301**, ring **1302**, face plate **1100** (with locating pin: position the outer spigot opposite the coil cable), brake disc **1101**.
- Position the armature **1102** (non through drill hole on one face located at 9 o'clock with respect to the yoke cable) on the yoke **1105** fitted with its springs. Screw the two threaded screws through the yoke into the armature while ensuring it does not protrude the braking face (slight recess). Press the armature onto the yoke using two nuts mounted onto the rods (tighten each rod gradually).
- Install the O-ring **1107** inside its groove between the armature **1102** and the yoke **1105**.
- Mount the yoke and armature onto the face plate using the fixing screws **1106** (tighten to torque).
- Check that the brake disc turns freely.
- Remove the two threaded rods: the brake disc is blocked.
- Refit the fan **7** and its holding washers **8** and **9**.
- Refit the cover **13**.
- Refit the control rod of the DLRA, DLM lever(s) if necessary.

If Encoder option: see §6.5
If Forced Ventilation option (VF) + Encoder: refer to §6.6 and 6.5.

4.4 - Air gap adjustment

Adjust the air gap when normal loosening is no longer possible. Always check the pad's thickness when adjusting to ensure pad wear does not exceed the R dimension in mm (i.e. R/2 on either side of the disc **1102**). Its change is compulsory **before** the lenght R between each brake lining reaches:

Brake size	Minimum R dimension
FFB1, FFB2, FFB3	9 mm
FFB4, FFB5	15 mm

Exceeding R dimension can cause security problems (quick decrease of braking torque M_f).

- Unscrew the screws **27** holding the metal cover **13**.
- Remove the metal cover **13**.
- Clear the O-ring **1107** to gain access to the air gap.
- Check the air gap between the yoke **1105** and armature **1102** in 3 points at 120°.

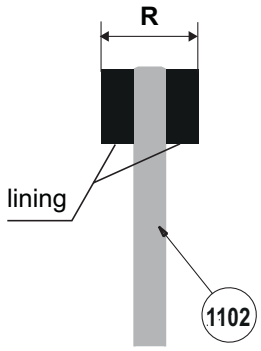

- Release spacers **1104**, move them closer to the yoke **1105**.
- Screw the fixing screws **1106** while measuring the air gap between the yoke and the armature to obtain a dimension of 0.3 mm. If release lever (DLM or DMD) presence, set to 0.6 mm.
- Screw the spacers **1104** in abutment on friction face-plate (tighten to 2 Nm ±10% torque).
- Tighten fixing screws **1106** brake yoke on face-plate to the torque as follows: FFB1: 4.9 N.m; FFB2 and 3: 8.5 N.m; FFB4 and 5: 21 N.m ±10%.
- Check the value of the air-gap again.
- Reposition the O-ring **1107** into its groove.
- Fasten the cover **13** with its screws **27**.

When DLRA or DLM mounted, refer to §6.1, 6.2.

en

5 - CHARACTERISTICS

5.1 - Braking moments

The braking moment is defined according to the number of springs and their colour, based on the values indicated in the table below.
Running-in: All brake linings, complete brake (Brake disk only: see section 3.2) are already run-in in the factory before assembly onto the motor. The dynamic braking moment indicated is optimum (tolerance -10 to +40 %).

Braking moments (N.m) specified for information; in case of normative restriction, please consult us.

	FFB1		FFB2		FFB3		FFB4		FFB5	
Nbr of springs	Colour	M_f (N.m)	Colour	M_f (N.m)	Colour	M_f (N.m)	Colour	M_f (N.m)	Colour	M_f (N.m)
3	Purple (RAL 4008)	4.5	White (RAL 1013)	11	-	-	Brown (RAL 8017)	41	-	-
4		6		15	-	-		55	-	-
5		7.5		19	Orange yellow (RAL 2000)	37		69	-	-
6		9		23		45		83	Black (RAL 9005)	120
7		10.5		26		52		96		140
8		12		30		59		110		160
9	-	-	-	-		67	-	-		180
10	-	-	-	-		74	-	-		200

5.2 - Electromagnets

As certain direct current coils are difficult to differentiate by their dimension, measure the coil's resistance using an Ohmmeter on an appropriate calibre and compare with the value indicated in the table below.
These values are theoretical, calculated for an ambient temperature of +20°C.

Characteristics of the electromagnets ±5 %, at +20°C

	180V coil ESFR VMA 31 to 34			20V coil		
Type brake	Intensity A	Resistance Ω	Power W	Intensity A	Resistance Ω	Power W
FFB1	0.232	776	42	1.974	10.1	39
FFB2	0.295	610	53	2.633	7.6	53
FFB3	0.345	522	62	2.793	7.2	56
FFB4	0.339	530	61	3.602	5.6	72
FFB5	0.547	329	98	4.211	4.8	84

6 - OPTIONS

6.1 - DLRA lever

- Exploded view

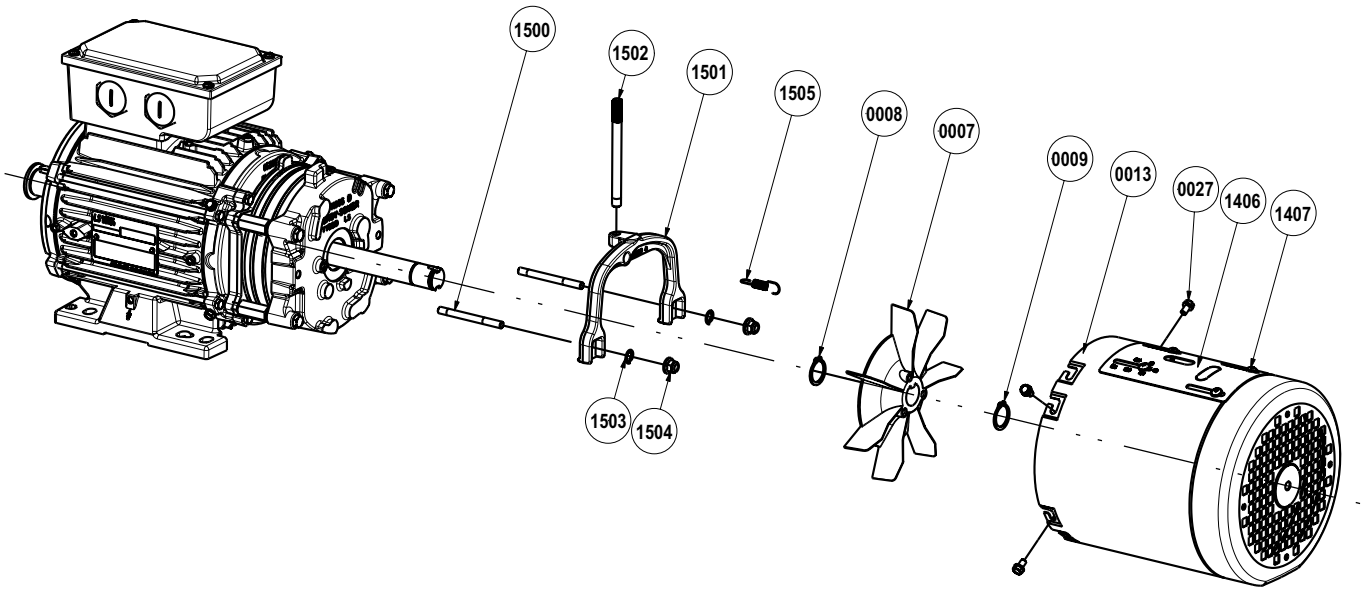

- Parts list

Item	Description	Qty
7	Fan	1
8	Fan thrust washer	0 or 1
9	Locking circlips	1
13	Fan cover	1
27	Cover fixing screw	3 or 4
1406	Cover closing hatch	1
1407	Fixing screw	4

Item	Description	Qty
1500	Stud	2
1501	DLRA calliper	1
1502	DLRA control rod	1
1503	Spiral spring under nut	2
1504	Locknut	2
1505	Return spring (item 1501)	1

• Disassembly:
- Unscrew the rod from the lever **1502** (if mounted on the lever).
- Unscrew the fixing screws **27** from the cover, remove the metal cover **13**.
- Remove the fan **7** by removing the axial locking circlips **9**.
- Extract the fan **7** using two screwdrivers as levers.
- Unscrew the two locknuts **1504**, remove the spiral springs **1503**.
- Remove the return spring **1505**.
- Remove the calliper **1501**.
- Unscrew the two studs **1500**.

After loosening, check that the brake is in the applied position once the maintenance operations are performed.

• (Re)Fitting:
Proceed the other way round of dismantling. Screw studs at the following torque: FFB1: 5.75 Nm; FFB2 and 3: 9.9 Nm; FFB4 and 5: 24 N.m ±10%.
- When screwing the locknuts **1504** again, add a 1.6 mm clearance between the calliper **1501** and the yoke **1105**.
- After fitting the cover, loosen the fixing screws **1407**, fully screw the control rod **1502** onto the calliper **1501**.
- **Position the cover closing hatch 1406 while checking that the lever's travel is effective (in brake release position)**.
- Tighten the fixing screws **1407**.

6.2 - DLM lever

- Exploded view

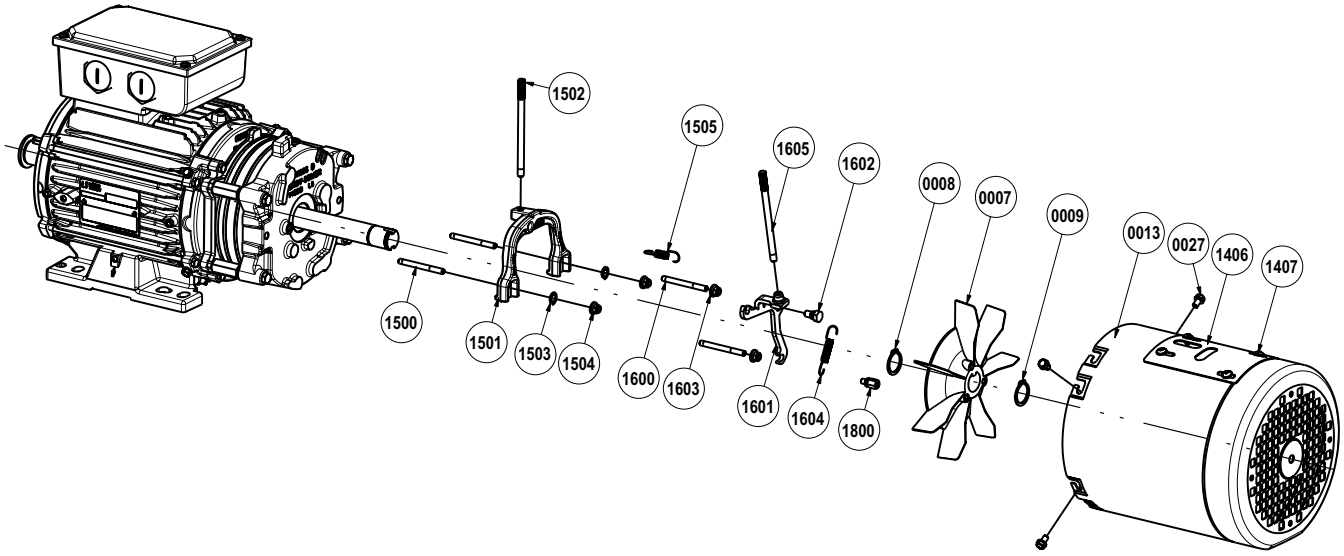

- Parts list

Item	Description	Qty	Item	Description	Qty
7	Fan	1	1503	Spiral spring under nut	2
8	Fan thrust washer	0 or 1	1504	Locknut	2
9	Locking circlips (item 7)	1	1505	Return spring (item 1501)	1
13	Fan cover	1	1600	Stud (item 1601)	2
27	Cover fixing screw (item 13)	3 or 4	1601	Latch	1
1406	Cover closing hatch	1	1602	Rotation axis (item 1601)	1
1407	Fixing screw (item 1406)	4	1603	Locknut	2
1500	Stud (item 1501)	2	1604	Return spring (item 1601)	1
1501	DLRA calliper	1	1605	Control rod (item 1601)	1
1502	DLRA control rod	1	1800	Spacer	1

• Operation
Releasing the brake and maintaining it in position: push the control rod DLRA **1502** by applying a force towards the rear of the brake motor, then swivel the rod of the DLM **1605** clockwise. Release the DLRA rod **1502** to lock the brake in the released position.

• Disassembly:
- Unscrew the control rods of the levers **1502** and **1605** (if mounted on their base).
- Unscrew the screws **27** from the cover, remove the metal cover **13**.
- Remove the fan **7** by removing the axial locking circlips **9**.
- Extract the fan **7** using two screwdrivers as levers.
- Remove the return spring **1604**.
- If applicable, unscrew the latch stop **1606**.
- Unscrew the hexagonal spacer (catcher springs) DLM **1800**.
- Unscrew the rotation axis of the latch **1602** then remove the latch **1601**.
- Unscrew locknuts **1603**.
- Unscrew studs **1600**.
- Remove the DLRA according to the procedure in section 6.1.

• Reassembly:
Proceed the other way round of dismantling. Screw the rotation axis of the bolt **1602** at the following torque: FFB1, 2 and 3: 5.75 Nm; FFB4 and 5: 9.9 Nm, ±10%.
Screw the hexagonal spacer DLM **1800** to the torque of 5.75 Nm ±10% for FFB1 in 5. Screw the studs at the following torque: FFB1 : 5.75 Nm; FFB2 and 3: 9.9 Nm; FFB4 and 5: 24 Nm, ±10%.

After any loosening operation, check that the brake is in the applied position once the maintenance operations are performed.

Working position of the DLM lever:

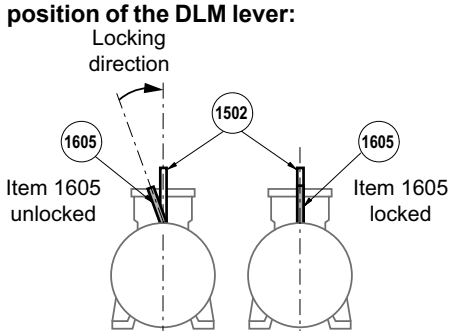

6.3 - DMD lever

- Exploded view

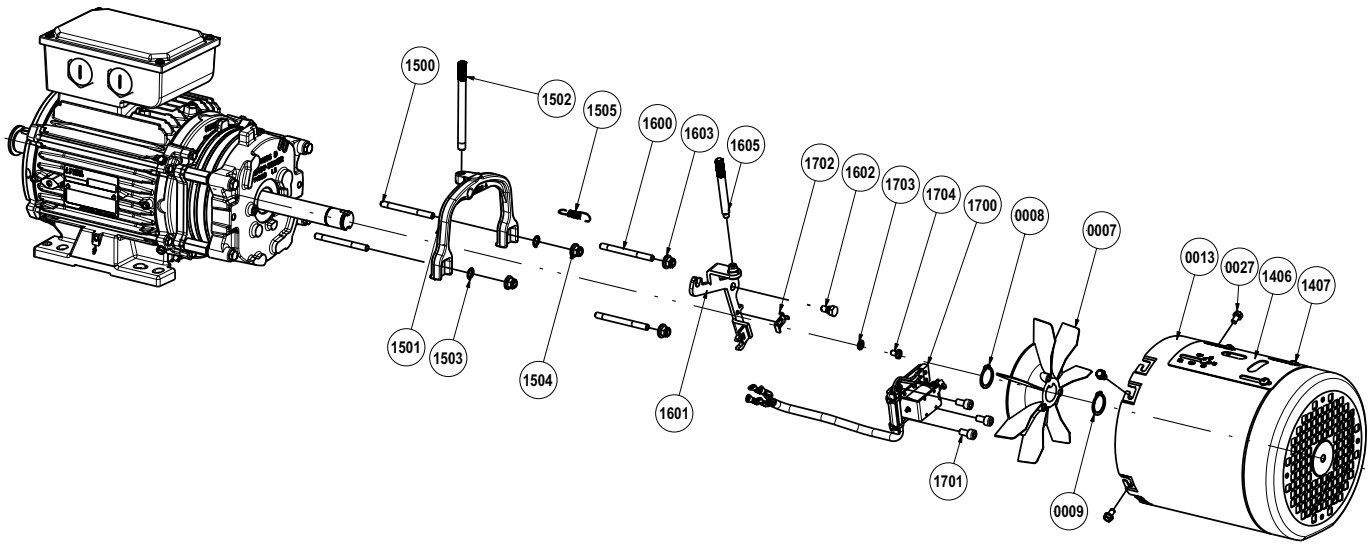

- Parts list

Item	Description	Qty	Item	Description	Qty
7	Fan	1	1505	Return spring (item 1501)	1
8	Fan thrust washer (item 7)	0 or 1	1600	Stud (item 1601)	1
9	Locking circlips (item 7)	1	1601	Latch mecanism	1
13	Fan cover	1	1602	Rotation axis (item 1601)	1
27	Cover fixing screw (item 13)	3 or 4	1603	Locknut	1
1406	Cover closing hatch	1	1605	Control rod (item 1601)	1
1407	Fixing screw (item 1406)	4	1700	Electromagnet plate assembly	1
1500	Stud (rep.1501)	2	1701	Plate fixing screw (item 1700)	3
1501	DLRA calliper	1	1702	Contact pallet	1
1502	DLRA control rod	1	1703	Washer under screw (item 1704)	1
1503	Spiral spring under nut	2	1704	Pallet fixing screw (item 1702)	1
1504	Locknut	2			

• Operation
For brakes fitted with a DMD, supply the brake coil separately from the motor. Once the brake is released, supply the electromagnet on the latch control plate. Once the latch contact is triggered, power off the brake coil then the control plate. The brake is maintained in the released position. When brake power is restored, locking drops automatically and the brake is operational.

• Disassembly:
- Disconnect the electromagnet plate **1700**.
- Unscrew the control rods of the levers **1502** and **1605** (if mounted on their base).
- Unscrew the screws **27** from the cover, remove the metal cover **13**.
- Remove the fan **7** by removing the axial holding circlips **9**.
- Extract the fan **7** using two screwdrivers as levers.
- Unscrew the screws **1701** from the electromagnet plate **1700**, then remove the plate.
To remove the latch (DLM) refer to § 6.2 and the (DLRA) refer to § 6.1.

• Reassembly:
Reverse the removal procedure.
- When refitting the mechanical link between the latch and the plate, adjust the contact pallet **1702** using the screw and washer **1703**, **1704**.
Adjusting must be done with the rod in; check that the pallet **1702** actually activates the microcontact of the electromagnet plate **1700**. Lock the fixing screws **1703**.
- Refit the fan...

After any loosening operation, check that the brake is in the applied position once the maintenance operations are performed.

Working position of the DMD lever:

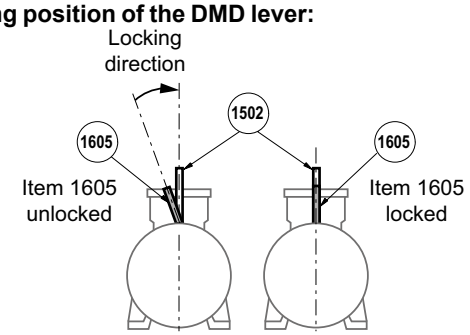

6.4 - Marks (Loosening-Wear)

6.4.1 - Wear mark

- Exploded view

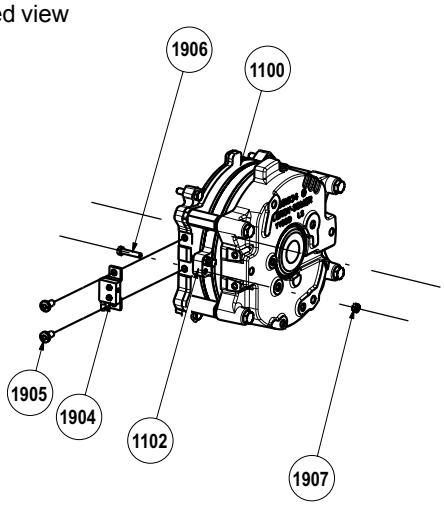

- Parts list

Item	Description	Qty
1100	Face plate	1
1102	Armature	1
1904	Wear indicator microcontact	1
1905	Fixing screw on item 1904	2
1906	Contact screw on item 1904	1
1907	Lock nut (item 1906)	1

• Operation:
For brakes fitted with a wear indicator, if the brake pad is worn (+ 0.6 mm) the armature actuates the microcontact fastened on the back plate, indicating that the air gap requires adjustment or the pad changed, when the latter is thinner than the minimum required (see procedure "Air gap adjustment" §2.5).

• Adjustment and removal:
To adjust the microcontact **1904**, engage the screw **1906** into the armature **1102**, position a 0.5 mm shim between the screw head and the microcontact sensor **1904**. Unscrew the screw **1906** until hearing the "click" of switching. Block the screw **1906** with the lock nut **1907** then remove the shim.
For disassembly, return to the beginning of the cover removal procedure. Unscrew the screws **1905** then remove the microcontact **1904**. Unscrew the locknut **1907** then unscrew the contact screw **1906**.

6.4.2 - Loosening indicator

- Exploded view

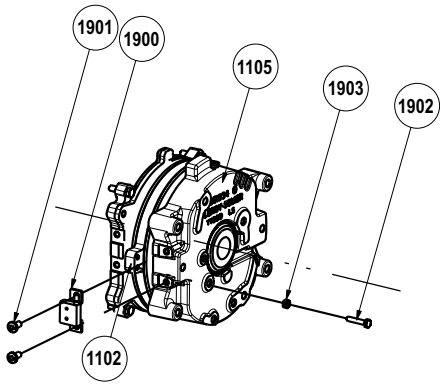

- Parts list

Item	Description	Qty
1105	Yoke	1
1102	Armature	1
1900	Loosening indicator microcontact	1
1901	Fixing screw (item 1900)	2
1902	Contact screw on item 1900	1
1903	Lock nut (item 1902)	1

• Operation:
For brakes fitted with a loosening indicator, when the brake is supplied, the armature actuates a microcontact (on-off) fastened to the yoke, indicating brake opening. Upon a power failure, the microcontact changes state to confirm brake closing.

• Adjustment and removal:
To adjust the microcontact **1900**, engage the screw **1902** into the armature **1102**, position a 0.2 mm shim between the screw head and the microcontact sensor **1900**. Unscrew the screw **1902** until hearing the "click" switching. Block the screw **1902** with the lock nut **1903** then remove the shim.
For disassembly, return to the beginning of the cover removal procedure. Unscrew the screws **1901** then remove the microcontact **1900**. Unscrew the locknut **1903** then unscrew the contact screw **1902**.

6.5 - Standard encoder (incremental, absolute)

- Exploded view

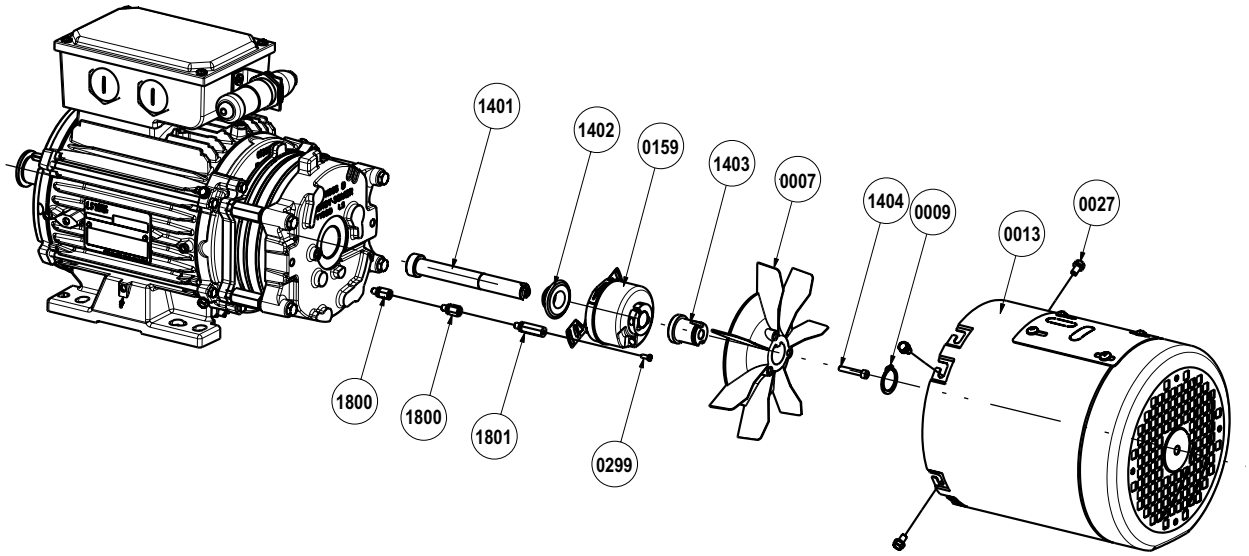

- Parts list

Item	Description	Qty	Item	Description	Qty
7	Fan	1	1401	Extension	1
9	Locking circlips (item 7)	1	1402	VLS seal	1
13	Ventilation cover	1	1403	Fan adapter socket	1
27	Cover fixing screw (item 13)	3 or 4	1404	Socket fixing screw	1
159	Encoder	1	1800	Spacer	1 or 2
299	Fixing screw	2	1801	Anti-rotation spacer extension	0 or 1

• Disassembly, Replacement:
- Disconnect the encoder (connector fastened to the body of the terminal box).
- Unscrew the screws **27** from the cover, remove the metal cover **13**.
- Unscrew the screw **1404** and remove the fan with its socket **1403** and the circlips **9**.
- Unscrew the screw **299**, unscrew the encoder hooping ring (radial screw) from the extension **1401**; remove the encoder.
- Remove the VLS seal **1402**. Remove the extension shaft **1401**; dismount hexagonal spacer **1800** and anti rotation spacer extension **1801**.

• Reassembly:
Proceed the other way round of disassembly.
- Fit the extension lead **1401** and tighten to the following torque: FFB1: 2.9 Nm; FFB2 to 5: 5.75 Nm, ±10%. Replace the spacer **1800** tightened to the torque of 5.75 Nm. Check the beating ≤ 0,05 mm. Replace the spacer extension **1801** and tighten to the torque of 5.75 Nm ±10% for FFB1 up to 5.
- Fit the (new) encoder on the shaft extension **1401**.
- Block the encoder by screwing to the torque of 0.8 Nm ±10% the screw **299** on the spacer extension **1801**.
- Tighten the encoder fixing screw to the torque, according to supplier instruction (Heidenhain: 1.1 Nm ±0,1 N.m; Hengstler: 0.6 Nm ±5%; Ideacod: 1.5 Nm ±10%).
- Fit the fan adapter socket **1403**, screw **1404** to the torque of 3 Nm ±10%. Insert the fan **7** on the socket **1403** then block on the axis with fan lock washer **9**.

After intervention, always close the cover(s) of terminal boxes and the caps.

6.6 - Forced ventilation kit

- Exploded view

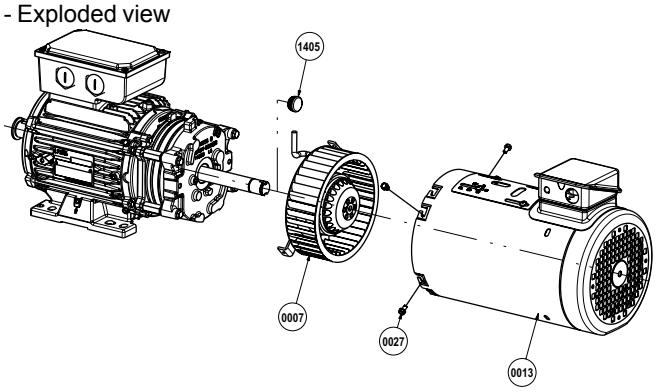

- Parts list

Item	Description	Qty
7	Forced ventilation	1
13	Forced ventilation cover	1
27	Cover fixing screw (item 13)	3 or 4
1405	Yoke borehole plug	1

• Disassembly, Replacement:
- Unscrew the screws **27** from the cover, remove the cover **13** fitted with forced ventilation.
When replacing the standard auto-ventilation with forced ventilation, remove the fan **7** by removing the axial holding circlips **9** (see §2.1), remove the extension **1401** and stop with plug **1405**.
• Reassembly:
- Reverse the removal procedure.

6.7 - IP65 10 pin 16A connector kit

The LSES 71 to 132 4-pole motors can be fitted with a connector compliant with UL and CSA standards as per the following two versions:
- WMS or male version, closed with lead cover

- WMFS or full version, with female extension cover on the side, docking brass PE ISO 25 for cable entry (not supplied) between 12.5 and 18 mm.

See connection diagram § 8.

6.8 - Particular conditions of use

- Thermal protections (§8)

- Heating resistors (§8)

- Surface temperatures:
As standard, the maximum temperature of our brake motors is +125°C with a maximum ambient temperature ≤ +40°C. Without derating the brake motor, the maximum surface temperature shall be:
• +135°C if 40°C ≤ 50°C
• +145°C if 50°C ≤ 60°C

Caution: The motor's surface temperature during operation requires wearing PPEs when handling parts and during maintenance operations.

- Maintenance of main bearings:
When detecting the following on the brake motor:
• abnormal noise or vibrations,
• abnormal heating on the bearing, check their condition.
Change damaged bearings as soon as possible to prevent additional damage to the brake motor and driven devices.
When one bearing requires to be changed, also change the other bearing. The floating bearing shall ensure expansion of the rotor shaft (check its identification upon disassembly).
Always change the sealing gaskets when changing the bearings.

- Sealing
After removing the bleeding plugs, refit them to ensure the brake motor achieves the IP55 protection rating.

- Gaskets, bearings

1 year (or 8000 h)	Inspect the state of the gaskets and bearings at the shaft passage (items **39**, **54**, **1402**).

7 - REPAIR GUIDE

Incident	Possible cause	Remedy
Abnormal noise	From motor or driven machine?	Disconnect the motor from the driven device and test the motor alone
Noisy brake motor	**Mechanical cause:** if the noise persists after powering off - Vibrations	Check that the key complies with the type of balancing - Check the condition of the bearings
	- Faulty bearing	- Change the bearings as soon as possible
	- Mechanical friction: ventilation, coupling	- Check and change the faulty part
	Electrical cause: if the noise stops after power drops	- Check the supply at the motor terminals - Check the drive setting
	- Normal voltage and 3 phases balanced	- Check the plate connection and strip tightening
	- Abnormal voltage	- Check the supply line
	- Unbalance of phases	- Check the resistance of windings
	Other possible causes: - bad drive setting - drive malfunction	Refer to the drive manual
Abnormal motor heating	- Faulty ventilation	- Check the environment - Clean the ventilation cover and the cooling fins - Check the fitting of the fan onto the shaft
	- Faulty supply voltage	- Check
	- Strip coupling error	- Check
	- Overload	- Check the intensity absorbed with respect to that indicated in the motor information plate
	- Partial short circuit	- Check electrical continuity of the windings and/or the installation
	- Phase unbalance	- Check the resistance of windings
	Other possible causes: - bad drive setting	Refer to the drive manual
Motor does not start	**Empty:** - Mechanical blocking	- Release the brake and motor powered off: check by hand that the shaft turns freely
	- Power supply line interrupted	- Check the fuses, electric protection, starting device
	- Position return (drive message)	- Check the wiring, drive setting, operation of the position sensor
	- Thermal protection	- Check
	In charge: - Unbalance of phases	Powered off: - Check the rotation direction (order of the phases) - Check the resistance and continuity of the windings - Check the electric protection
	- Drive	- Check the setting, dimensioning (Max current delivered by the speed drive)
	- Position return (drive message)	- Check the wiring, drive setting, operation of the position sensor
	- Thermal protection	- Check
The brake does not release	- The voltage is present at the coil's terminals	The air gap is too big, the yoke does not attract the armature - Adjust and check disc wear
		The voltage is too low U < 0.8Un - Restore the voltage to its nominal value
		The coil is off, its resistance is infinite - Change the complete brake unit or the coil
	- The lever rod is in abutment on the cover	- See adjustment section 6.1 ref.**1406**
	- Mobile parts are stuck	- Remove, clean, and look for the cause of sticking
	- No more voltage at the coil terminals	The cell is inoperative - Test it
	- Drive	- Check that the brake supply is separate from the motor's
The call time is too long	- Check the voltage at the coil terminals	The voltage is too low U < 0.8Un (Un: according nominal power supply) - Restore the voltage to its nominal value
	- The air gap is too wide	- Readjust
	- The braking moment has increased	- Return to the initial setting or consult
The drop time is too long	- Check that the power off is performed on the direct	- Connect the cell as per the mark (A) power off on the direct
The brake is noisy when released	- Irregular or excessive air gap	- Remove if necessary and clean (see §4)
	- Foreign material in the air gap	- Clean
	- Extension shaft **1401** fitted incorrectly	- See encoder reassembly section 6.5
	- Drive	- Check that the brake supply is separate from the motor's
The braking moment is insufficient	- The friction faces are not clean and dry	- Clean the friction faces - Redefine the braking moment
	- Pollution due to environment	- Clean friction faces. If disc is marked, replace it
	- The disc is worn	- Change the disc
The brake is applied (drops) but braking is weak	- Insufficient spring pressure	- Check pad wear. Increase the number of springs
	- Correct spring pressure	- Check the surface wear of the armature - Use a blower to clean dust due to friction
Permanent pad friction	- The air gap is insufficient	- Adjust the air gap

en

8 - CONNECTION DIAGRAMS

8.1 - Motor: reminder

❶ **Check the rotation direction of the drive shaft.**

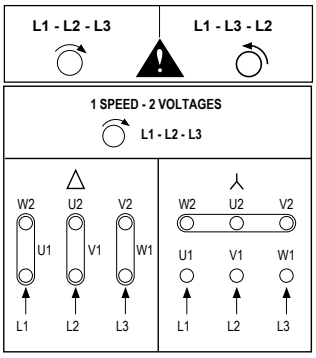

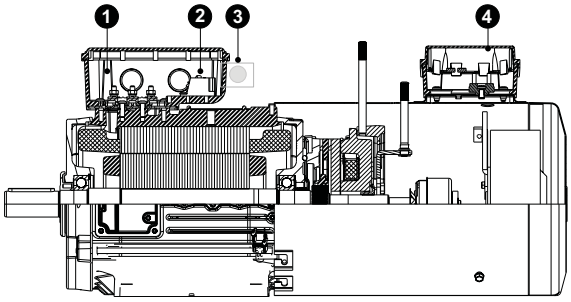

❷ **Check the brake wiring according to the power supply.**

8.2 - Brake: diagram under the TB cover

8.2.1 - 180VDC brake coil for standard 1-speed brake motor

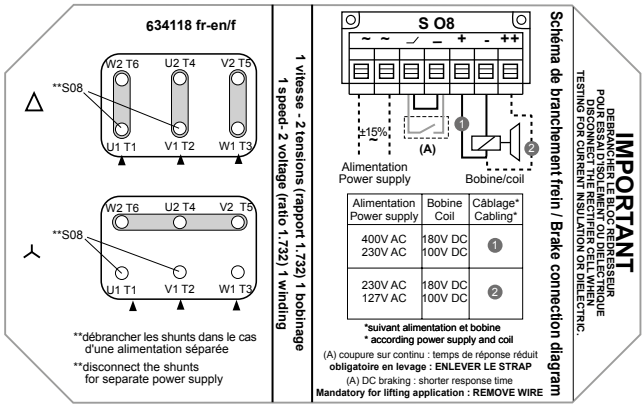

❷

8.2.2 - 180VDC brake coil for 2-speed motor with 2 windings, 1 voltage, built-in supply

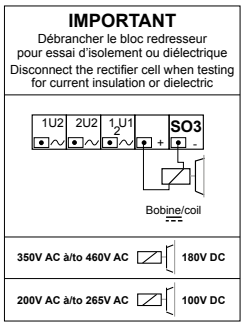

❷

8.2.3 - 20VDC brake coil, separate power supply 24V - (F)LS(ES) 71 to 160

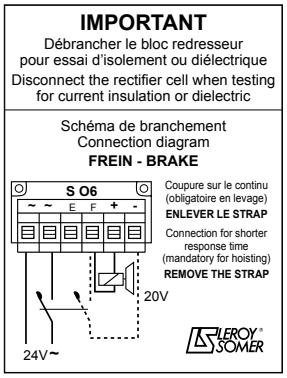

❷

8.2.4 - Connection for reduced response time TRR: built-in power supply mandatory

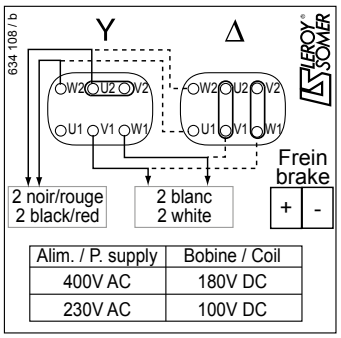

❷

8.3 - Options

8.3.1 - Standard thermal protections, class F, 150°C

Thermal protections	Double PTO	Triple CTP
Cut-off current	1.6A - cosφ 0.6	-
RMS voltage	250V	2.5V max
Fixing	on clamp terminal + flag (purple/white)	on board (except HA71: on clamp terminal) + flag (black/black)

8.3.2 - Standard thermal probes

Thermal probes	PT100	KTY
Measurement current	10mA max	10mA max
RMS voltage	-	-
Fixing	on clamp terminal (3 wires black/red/black)	on clamp terminal (brown/white)

8.3.3 - Indicators

Indicators	Loosening indicator (Open/Close)	Wear mark
Current	6A	6A
Voltage	250V	250V
Fixing	on clamp terminal (3 wires blue/black/grey) Black/Blue = NO Black/Grey = NC	on clamp terminal (3 wires blue/black/grey) Black/Blue = NO Black/Grey = NC

NO: normally open; NC: normally closed

8.3.4 - Encoders ❸

Standard incremental encoder: 5VDC 1024 pts/tr or 4096 pts/tr
Separate supply brake

Terminal No.	
1	0V
2	+VDC
3	A
4	B
5	0
6	$\overline{A}$
7	$\overline{B}$
8	$\overline{0}$
9	NC
10	NC
11	NC
12	NC

View of the male socket on the encoder side

NC: Non Connected (free)

Standard absolute encoder: SSI - 10/30VDC 8192 pts 4096 tr
Separate supply brake

17-pin
HEIDENHAIN coupling

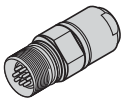

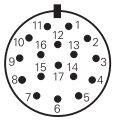

	Power supply					Incremental signals				Other signals	
	7	**1**	**10**	**4**	**11**	**15**	**16**	**12**	**13**	**3**	**2**
	U_P	**Sensor** U_P	**0 V**	**Sensor** 0 V	**Internal shield**	**A+**	**A–**	**B+**	**B–**	**Vacant**	**Vacant**
	Brown/ Green	Blue	White/ Green	White	/	Green/ Black	Yellow/ Black	Blue/ Black	Red/ Black	Red	Black

	Absolute position values					
	14	**17**	**8**	**9**	**5**	**6**
	DATA	**$\overline{DATA}$**	**CLOCK**	**$\overline{CLOCK}$**	**Vacant**	**Vacant**
	Gray	Pink	Violet	Yellow	Green	Brown

Shield on housing; **U_P** = power supply voltage
Sensor: The sensor line is connected internally with the corresponding power line.
Vacant pins or wires must not be used!

8.3.5 - Forced ventilation ❹

Single phase forced ventilation for LS 71

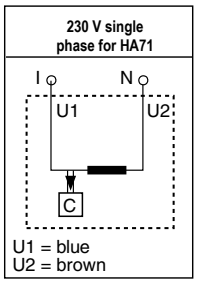

Single phase forced ventilation for (F)LS(ES) 80 to 132

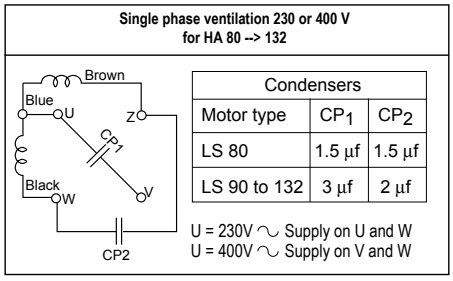

Condensers		
Motor type	CP_1	CP_2
LS 80	1.5 µf	1.5 µf
LS 90 to 132	3 µf	2 µf

Three phase forced ventilation for (F)LS(ES) 160

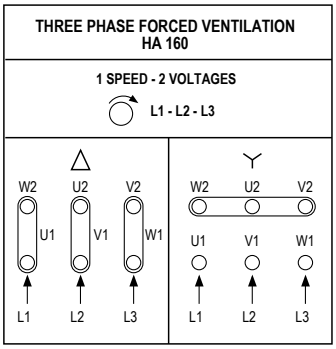

8.3.6 - Plug-in connector

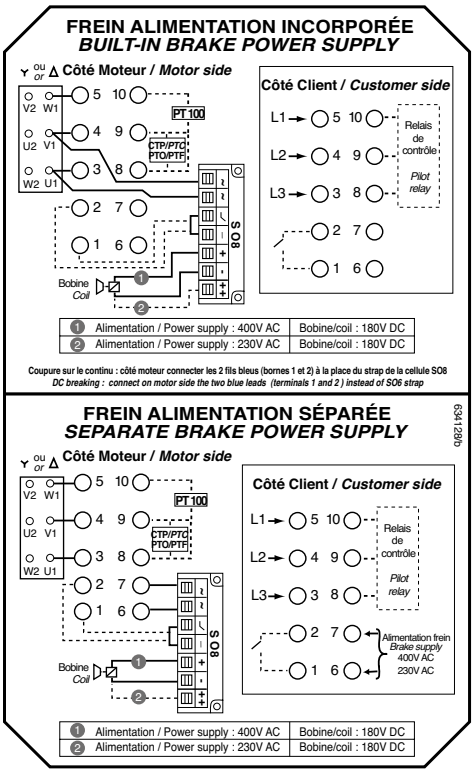

8.3.7 - VARMECA 31 / 32

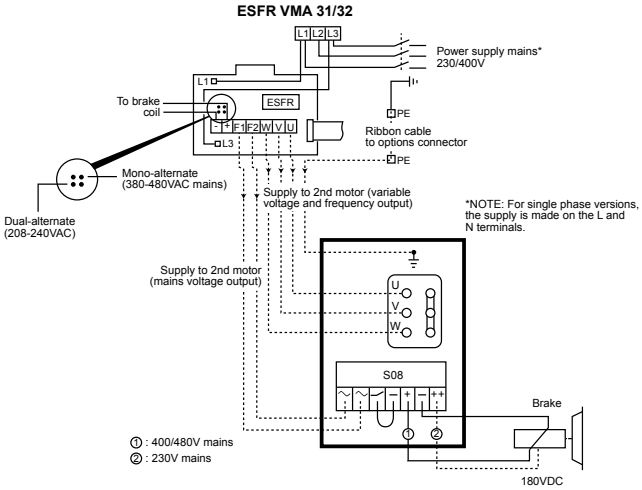

8.3.8 - VARMECA 33 / 34 option

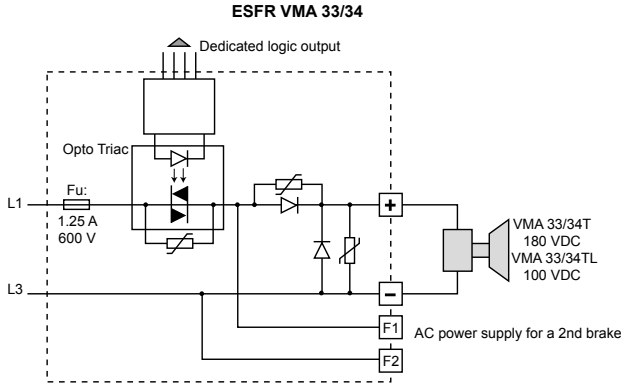

9 - RECYCLING

At end of life, call upon a material disposal company to dispose of the different brake motor components.

EMERSON™
Industrial Automation

Leroy-Somer™