INSTALLATION, COMMISSIONING AND SERVICING INSTRUCTIONS

ModuMax mk4
97 116 147 196 254

Natural Gas I_{2H}
LPG Propane I_{3P}

IMPORTANT NOTE
THESE INSTRUCTIONS MUST BE READ AND UNDERSTOOD BEFORE INSTALLING, COMMISSIONING, OPERATING OR SERVICING EQUIPMENT

09/2026
240958 A04

Hamworthy

Customer After Sales Services

Telephone: 03330 040395

E-mail: service@hamworthy-heating.com

Technical Enquiries

To supplement the detailed technical brochures, technical advice on the application and use of products in the Hamworthy Heating range is available from our technical team and our accredited agents.

Site Assembly

Hamworthy offer a service of site assembly for many of our products where plant room access is restricted. Using our trained staff we offer a higher quality of build and assurance of a boiler built and tested by the manufacturer.

Commissioning

Commissioning of equipment by our own engineers. accredited agents or specialist sub-contractors will make sure the equipment is operating safely and efficiently.

Service Contracts

Regular routine servicing of equipment by Hamworthy service engineers inspects the safety and integrity of the plant, reducing the risk of failure and improving performance and efficiency. Service contracts enable you to plan and budget more efficiently.

Breakdown service, repair, replacement

Hamworthy provide a rapid response breakdown, repair or replacement service through head office at Poole and accredited agents throughout the UK.

Spare Parts

We offer a comprehensive range of spare parts, providing replacement parts for both current and discontinued products. Delivery options are available to suit you. Please refer to our website for more details.

ModuMax mk4

97, 116, 147, 196 & 254

- **Condensing, Fully Modulating, Pre-Mix, Gas Fired, Modular Boilers for Heating and Domestic Hot Water Installations**
- **Natural Gas I2H**
- **LPG Propane I3P**
- **The ModuMax boiler is intended for use as a commercial appliance.**
- **This boiler is for use on Group H natural gas (2nd family) I2H and LPG propane (3rd family) I3P. Please make sure the relevant information within this document for each specific gas requirement is adhered to prior to firing the boiler.**
- **Country of destination : United Kingdom & Republic of Ireland.**
- **This boiler complies with all relevant European Directives.**

LITERATURE SYMBOLS

⚠ **WARNING: Risk of injury or death.**

⚠ **CAUTION: Risk of damage to objects.**

ⓘ **IMPORTANT: Notes to make you aware.**

CONTENTS

1.0 INTRODUCTION 5
1.1 Installation 5
1.7 Boiler Variations 6
1.10 Options 6
1.10.1 Header Kits 6
1.10.2 Controls peripherals 6

2.0 SUPPLY AND DELIVERY 7
2.1 Delivery Verification 7
2.2 Header Kit 7

3.0 SIZE AND SPACE REQUIREMENTS 8
3.1 Dimensions and Clearances 8

4.0 SITE LOCATION AND PREPARATION 10
4.1 Site Location 10
4.2 Gas Supply 10
4.3 Flueing 10
4.4 Water Supply 11
4.5 Condensate Connections 11
4.6 Electrical Supply 12

5.0 BOILER ASSEMBLY 13
5.1 General 13
5.2 Site Disassembly 13
5.3 Boiler Assembly 13
5.4 Water Connections 14
5.5 Open Vented Systems 14
5.6 Sealed Systems 14
5.7 Electrical Connections: 14

6.0 PRE-COMMISIONING 15
6.1 Gas Supply 15
6.2 Ventilation 15
6.3 Pipework, Valves and Pump 15
6.4 Flue 15
6.5 Electrical 15

7.0 CHECKS PRIOR TO LIGHTING 15
7.1 Boiler Gas System Leak Check 15
7.2 Checks 16

8.0 INITIAL LIGHTING 17
8.1 Fire up the boiler 17
8.2 Controls Operation 18
8.3 Ignition Controller Check 19
8.4 Gas Supply Pressure Check. 19
8.5 Combustion Checks 19
8.6 Servicing 20
8.7 User Instructions 22

9.0 FAULT FINDING 22
9.1 Safety Temperature Limiter (Limit Thermostat) ... 22
9.2 Ignition Controller 22

10.0 SERVICING 25
10.1 Regular Service 25
10.2 Annual Service 25
10.3 Four Year Service 26

11.0 REPLACEMENT AND FAILED COMPONENTS 27
11.1 Hot Surface Igniter and Flame Probe Assy. 27
11.2 Flow / Return Sensor 27
11.3 Temperature Limiter (Limit Stat) 27
11.4 Gas Valve 27
11.5 Combustion Fan 28
11.6 Venturi 28
11.7 Burner 28
11.8 Ignition Transformer 28
11.9 Main Control - PCB 28
11.10 Clip in Modules 29
11.11 Display screen 29
11.12 Low Gas Pressure Switch 29
11.13 Air Pressure Switch 29
11.14 Ignition Transformer In-line Fuse 29
11.15 Air Inlet Filter 30

12.0 RECOMMENDED SPARES 31

APPENDIX A. GAS DATA 32

APPENDIX B. ELECTRICAL SUPPLY & CONTROLS CONNECTIONS 34

APPENDIX C. FLUE DATA 38

APPENDIX D. VENTILATION 41

APPENDIX E. WATER DATA 42

FIGURES

Fig 1. Header Kit 7
Fig 2. Dimensions and Clearances 97 & 116..... 8
Fig 3. Dimensions and Clearances 147, 196, 254 9
Fig 4. Gas Connection Point..... 10
Fig 5. Water and Flue Connection Point.....11
Fig 6. Boiler Condensate Piping Installation 11
Fig 7. Boiler Condensate Connection.....11
Fig 8. Boiler Electrical Connections 12
Fig 9. Module Fixings - Top Panel Fixing Screw..... 13
Fig 10. Module Fixings - M8 Bolts..... 13
Fig 11. Module Fixings - LH Side Panel Fixing Screw..... 13
Fig 12. Flue Collector Box Assembly 14
Fig 13. Flue Header Connection..... 14
Fig 14. Rear Water Connections 14
Fig 15. Overheat Stat Pocket..... 16
Fig 16. Gas Isolating Valve (97 & 116 shown) 16
Fig 17. Venturi & Gas Valve (97/116/147 kW shown) 16
Fig 18. Gas Isolating Valve 17
Fig 19. General Overview of Touchscreen 18
Fig 20. General Overview of Controls..... 18
Fig 21. Removal of Sample Point Plug 19
Fig 22. Combustion Analyser Probe Setting..... 19
Fig 23. Insertion of Analyser Probe 19
Fig 24. Main Menu Screen..... 20
Fig 25. Access Level Page..... 20
Fig 26. Main Menu - Access Level Enabled..... 20
Fig 27. Service Screen 20
Fig 28. Adjusting Gas Valve Throttle 20
Fig 29. Adjusting Gas Valve Throttle 20
Fig 30. Service - High Fire..... 21
Fig 31. Service - Low Fire 21
Fig 32. Adjusting Gas Valve Offset 21
Fig 33. Adjusting Gas Valve Offset 21
Fig 34. Service Finish..... 22
Fig 35. Wiring Diagram..... 24
Fig 36. Hot Surface Igniter and Flame Sensing Probe Positions 27
Fig 37. Air Pressure Switch 29
Fig 38. In-Line Fuse..... 29
Fig 39. Air Filter 30
Fig 40. Filter Media Retaining Pin 30
Fig 41. Typical Mains Supply Wiring..... 35
Fig 42. External Control Wiring for Multiple Module Installation..... 36
Fig 43. External Control Wiring for Multiple Module Installation Cont. 37
Fig 44. Open Natural Draught (B23/B23p) Flue System - applies to 97 & 116 Single Boilers Only
Open Natural Draught (B23/B23p) Flue System (Multiple Boiler Installations) 40
Fig 45. Typical Piping Layouts 43
Fig 46. Single Boiler Controlled by External Enable Signal to Fixed Flow Temperature 45
Fig 47. Single Boiler with 2x Heat Circuits Controlled by QAA, & DHW Controlled by Tank Sensor..... 46
Fig 48. Multiple Boilers Controlled by External Enable Signal to Fixed Flow Temperature 47
Fig 49. Primary Circuit With Individual Boiler Shunt Pumps..... 48
Fig 50. Reverse Return Primary Circuit with Individual Motorised Boiler Isolation 48
Fig 51. Single Pipe Primary Circuit..... 49

TABLES

Table 1 Header Kit Packaged Dimensions 7
Table 2 General Data 32
Table 3 Data on Products < 400 kW 33
Table 4 Electrical Data..... 34
Table 5 Natural Gas & LPG 38
Table 6 Flue Resistance..... 39
Table 7 Mechanical Ventilation Flow Rates..... 41
Table 8 Water Data..... 42
Table 9 Cold Feed and Vent Pipe Sizes 43

1.0 INTRODUCTION

1.1 Installation

This appliance can be operated by children aged 8 and older, as well as individuals with varying physical, sensory, or cognitive abilities, or those lacking experience and knowledge, provided they are supervised or instructed on the safe use of the appliance and understand the associated risks.

All installations MUST conform to the relevant Gas Safety and Building Regulations.

Health & Safety requirements must also be taken into account when installing any equipment.

Failure to comply with the above may lead to prosecution.

1.2

This boiler is intended for use on Group H Natural Gas (2nd Family) I2H or LPG Propane (3rd Family) I3P

The information relating to Natural Gas & Propane firing is to be found in Appendix A.

Boilers MUST NOT use gas other than that for which they are designed and adjusted.

Regulatory disposal and proper recycling of this product can prevent damage to the environment and health risks.

- For the disposal of the product and the component parts, the services of an accredited waste disposal company should be used.
- For more information on waste disposal/ management, contact the local authority responsible for waste management or the point of sale where the product was purchased.

1.3

The ModuMax is a gas fired, fully modulating, condensing, fan assisted, open flued central heating / hot water boiler. Gas / air ratio control technology it is able to provide clean efficient operation across a large output range.

The boiler can be supplied in a modular format, a maximum of three vertically stacked modules being arranged into a single unit sharing a common flue.

Each boiler module utilises a metal fibre, fan assisted, pre-mix burner.

Operation is initiated and controlled by a boiler management system with a user interface touchscreen for accessing and changing boiler parameters.

Each of the boiler models is designed for direct connection to a flue system. The Technical Data for the various arrangements is given in Appendix C. Flue Data. The flue outlets from more than one unit may be connected to a single chimney.

No draught diverter is fitted to the boiler nor is a fixed diverter required in the flue system. However a draught stabiliser may be required for some installations.

The ModuMax is floor mounted and is intended for the heating of Commercial and Industrial premises.

It may also be used to supply hot water for these premises via an indirect cylinder.

The ModuMax has a low water content and water flow rates MUST be maintained at or above the recommended levels shown in Appendix E.

1.4

If the boiler is installed in an unvented heating system or in a system operating with low water pressure, it is recommended that an additional safety device - such as a water pressure switch or a water flow switch - be incorporated into the system.

This device should be installed as close as possible to the return inlet of the boiler and correctly wired to the appliance's Safety Interlock input to prevent boiler operation under unsafe conditions and to ensure reliable and safe system performance.

The appliance can operate up to an altitude of 2000m.

The appliance has an Ingress protection rating of IPX0.

Consideration should also be given to the maximum working pressure of the boiler as given in Appendix E.

Consult Hamworthy Heating Technical Department for help or assistance if in doubt.

1.5

The ModuMax boiler is not suitable for direct connection to domestic hot water supplies.

1.6

The ModuMax boiler can be installed with reverse return water flow, (optional HHL pipe kits available) requiring a primary circuit pump and low loss header, or with individual module shunt pumps or electrical isolating valves (pipe kits with pumps available from HHL).

See Appendix E, for typical schematic layouts.

1.7 Boiler Variations

ModuMax mk4 97H	- Single 97kW Module
ModuMax mk4 97/194V	- 2 x 97kW Modules, stacked vertically (194kW)
ModuMax mk4 97/291V	- 3 x 97kW Modules, stacked vertically (291kW)
ModuMax mk4 116H	- Single 116kW Module
ModuMax mk4 116/232V	- 2 x 116kW Modules, stacked vertically (232kW)
ModuMax mk4 116/348V	- 3 x 116kW Modules, stacked vertically (348kW)
ModuMax mk4 147H	- Single 147kW Module
ModuMax mk4 147/294V	- 2 x 147kW Modules, stacked vertically (294kW)
ModuMax mk4 147/441V	- 3 x 147kW Modules, stacked vertically (441kW)
ModuMax mk4 196H	- Single 196kW Module
ModuMax mk4 196/392V	- 2 x 196kW Modules, stacked vertically (392kW)
ModuMax mk4 196/588V	- 3 x 196kW Modules, stacked vertically (588kW)
ModuMax mk4 254H	- Single 254kW Module
ModuMax mk4 254/508V	- 2 x 254kW Modules, stacked vertically (508kW)
ModuMax mk4 254/762V	- 3 x 254kW Modules, stacked vertically (762kW)

1.8

The fully assembled unit is supplied covered with a protective sleeve. The flue assemblies for the stacked models are supplied in a separate pack.

1.9

Each ModuMax module can be controlled by a 0-10V analogue control input, such as a that from a Building Management System (BMS) or a Remote enable signal using a Volts Free Contact.

1.10 Options

1.10.1 Header Kits

Optional header kits are available for models:

97/194, 97/291, 116/232, 116/348, 147/294, 147/441, 196/392, 196/588, 254/508 & 254/762

These kits are free-standing allowing installation to the system prior to installing the boiler and can incorporate all necessary valves, interconnecting pipework, and flexible flow and return connections. Refer to individual kit instructions for details.

1.10.2 Controls Peripherals

The boiler has the potential to accept the following Option Kits:

Cascade Kit

- Allows mulitple boilers to be connected together allowing for internal cascade management

Additional kits available from Hamworthy Heating:

- Strap On Temperature Sensor Kit
- Immersion Temperature Sensor Kit
- Outside Air Temperature Sensor
- Room Sensor QAA55
- Room Sensor QAA74
- Additional Heat Circuit Zone Kit
- ModBus Controller Kit

2.0 SUPPLY AND DELIVERY

⚠ WARNING: Do not lift the boiler by the casing panels!

The boiler is dispatched to site as a pre-assembled and tested unit. It is the installers responsibility to move the boiler to the plant-room.

Make sure the boiler is kept secure when handling to avoid it toppling, as this will result in damage.

Each 2 and 3 high stacked ModuMax model is supplied with a flue collector manifold. This is separately packaged in a dedicated cardboard box. Single ModuMax boilers do not have an additional flue collector manifold.

ⓘ IMPORTANT: Care must be taken as impacts will cause damage to the flue collector manifold.

2.1 Delivery Verification

When taking delivery please make sure that you have received the correct number of boilers and flue collector manifold to fulfill your order. If any item is missing please contact our after sales service team. Please provide details of your order number and contract number as well as a detailed description of the missing item.

2.2 Header Kit

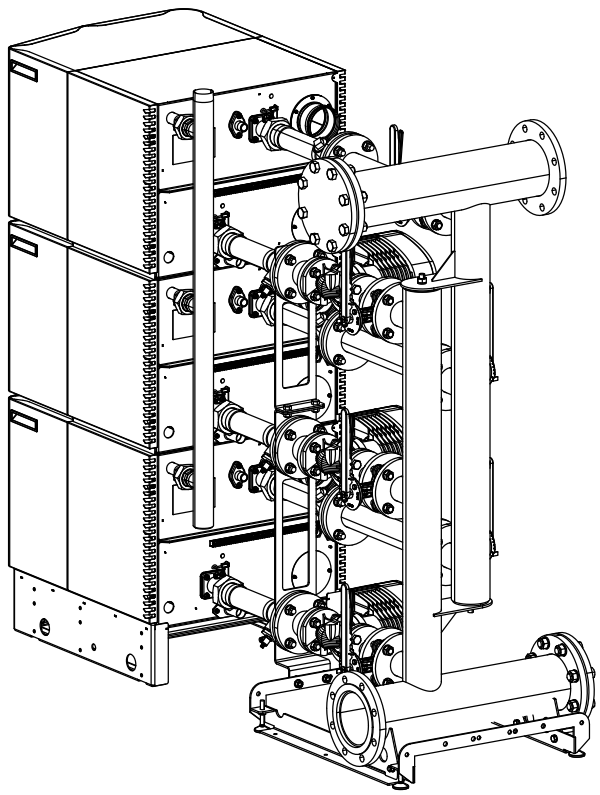

Fig 1. Header Kit

Where header kits are used these are packaged separately from the boilers. The packaging for each header set is defined in the table below. Ancillary items such as isolation valves and flexible boiler connectors are packaged in a cardboard box on the same pallet. The whole package is shrink wrapped for security and basic protection.

Table 1 Header Kit Packaged Dimensions

Model	Depth mm	Width mm	Height mm	Weight Kg
97/196, 116/232	840	835	1447	169
97/291, 116/348	840	935	1988	215
147,294, 196/392, 254/508	840	905	1473	208
147/441, 196/588, 254/762	840	905	2048	265

3.0 SIZE AND SPACE REQUIREMENTS

3.1 Dimensions and Clearances

3.1 The ModuMax Series boiler range has been designed to utilise minimum floor space by stacking boiler modules, therefore it is important the plant-room has sufficient ceiling height to allow for installation and connection to the flue system.

Also important is allowance for sufficient access at sides and rear of boiler for flue and pipework connections. See Fig 2.

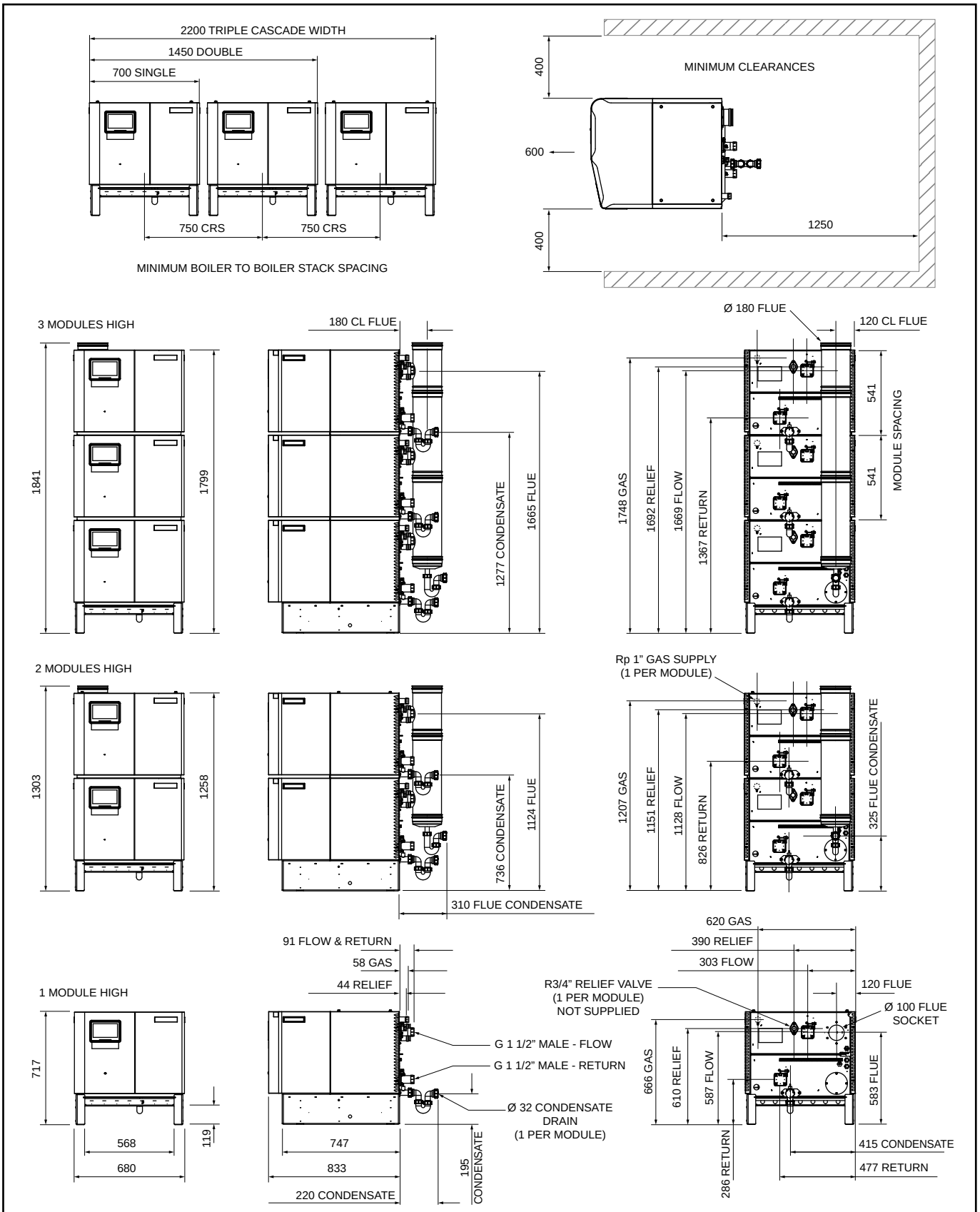

Fig 2. Dimensions and Clearances 97 & 116

Fig 3. Dimensions and Clearances 147, 196, 254

4.0 SITE LOCATION AND PREPARATION

⚠ WARNING: Do not lift the boiler by the casing panels!

4.1 Site Location

- The floor or plinth for the boilers and pipe kit must be both flat and level to make sure correct alignment of fittings and connections.
- The floor or plinth must be sufficiently strong to support the weight of both the boilers and pipe kit where used.
- The floor or plinth must be fireproof in accordance with BS 6644.
- The plant-room must have sufficient space for installation of boilers, pipe kits, pipework, pumps controls, flues ventilation, access and servicing and other items of plant.

4.2 Gas Supply

- Gas supply pipes must be in accordance with BS 6891 or IGE/UP/2
- Gas supply connections to the boiler must not be smaller than the connection on the boiler - Rp1 “ (97 & 116) & Rp 1 ¼ “ (147/196/254)
- Gas installation must be soundness tested to BS 6891 or IGE/UP/1 & IGE/UP/1A.
- Gas installation must be purged to BS 6891 or IGE/UP/1 & IGE/UP/1A.
- Boiler inlet gas pressure; nominal 20 mbar (minimum 17.5 mbar) for Natural Gas or nominal 37 - 50 mbar (minimum 30 mbar) for LPG dynamic at the connection to the boiler.
- Boiler house gas isolation valve must be clearly identified and installed close to the entrance / exit.

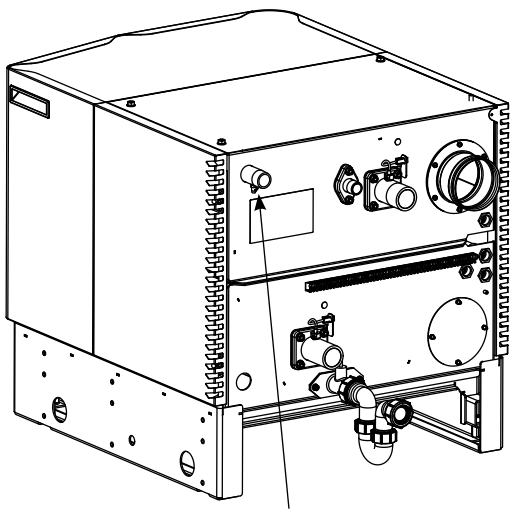

Gas Connection with inlet pressure test point.
Rp 1 “ (97 & 116) & Rp 1 ¼ “ (147/196/254)

Fig 4. Gas Connection Point

4.3 Flueing

- Flue termination, routing and construction must comply with the requirements of the Clean Air Act 1956, BS 6644 and IGE/UP/10.
- The ModuMax 97 , 116 ,147, 196 & 254 boilers are intended for connection to a traditional chimney system- refer to Appendix C for installation details.
- ModuMax 2 and 3 high stacked models must use the headers provided with the boiler prior to any connection to the flue system. A condensate trap (32 mm dia.) is supplied with the flue header.
- Any flue must be self supporting and separable from the boiler for servicing requirements.
- The maximum number of modules firing into a common chimney is 9. For larger installations refer to HHL Technical
- Due to the low flue gas temperature, 50 °C (condensing), 80 °C (non-condensing), condensation will occur in the flue, flue materials must be non-corrosive and utilise fully sealing joints.
- Flue construction is recommended of a twin wall, insulated type to maintain buoyancy within the flue.
- Adequate facilities must be provided for draining the flue condensation.
- Horizontal flue runs must be kept as short as possible and be inclined at a minimum of 2.5° towards the terminal.
- The flue system must be designed acknowledging that there is a positive pressure generated by the boiler combustion fan. Refer to Appendix C.
- The flue system must be designed to limit the max. suction (cold) to 30 Pa negative, measured at the connection to the boiler. If the suction is greater than 30 Pa, refer to HHL technical. This condition must then be checked hot and with all boilers firing, the max. pressure at the connection to the boiler should be 150 Pa positive. In the event that the flue system when hot does generate a suction, the max. suction is 100 Pa.
- Any stabiliser fitted must be in or close to the vertical chimney.
- Fan dilution - the design must provide for the use of balancing and trim dampers, and their location and operation must be such that the constraints detailed above can be met. Care must be taken to make sure that the fan performance is matched to deliver the appropriate dilution, whilst ensuring that excessive suction is not applied to the boilers. If in doubt, refer to HHL Technical.
- Fan assist - the use of fan assist is not recommended as the boilers have sufficient fan performance to drive the system. If in doubt, refer to HHL Technical.

4.4 Water Supply

- Feed and Expansion tanks to comply with static height requirements of HSE document INDG436.
- Cold feed and open vent pipes to comply with requirements of BS 6644.
- Pressurised system to comply with BS 7074.
- It is recommended that the system pipework is flushed twice before fitting the boiler and using a water treatment.
- It is recommended that the heating system water is treated
- In hard water areas (>180 mg $CaCO_3$/litre) precautions such as water treatment are strongly recommended to prevent the build up of sludge and scale and also to control the system water pH to between 7.0 & 9.5.
- Leaks in the system pipework should be fixed to prevent dilution of water treatment. To monitor the volume of make-up water entering the system, a water meter must be fitted and readings recorded in a log book to be retained on site. Do not top up with more than 5% of the installation's water content in any one year.
- Maximum working water pressure is 10 bar (1000 kPa).
- For minimum water pressure see Appendix A. Gas Data.

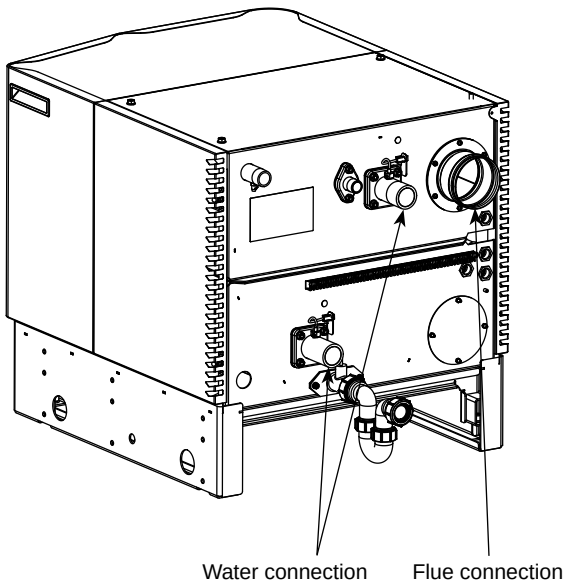

Fig 5. Water and Flue Connection Point

4.5 Condensate Connections

- Provision must be made for removal of condensate from the boiler and flue system.
- Condensate is mildly acidic, typically pH 3-5.
- Condensate pipework must be non-corrosive and not copper. Hamworthy recommend 32 mm dia. Plastic waste pipe. Typical volume of condensate produced is 15l/h per 100kW
- Condensate may be discharged to a standard drain subject to National or Local regulations.
- Location of condensate pipework should prevent freezing within tundish's, traps and pipework.
- The connection to the boiler condensate drain accepts a straight push-fit coupling for 32 mm i.d. plastic waste pipe.

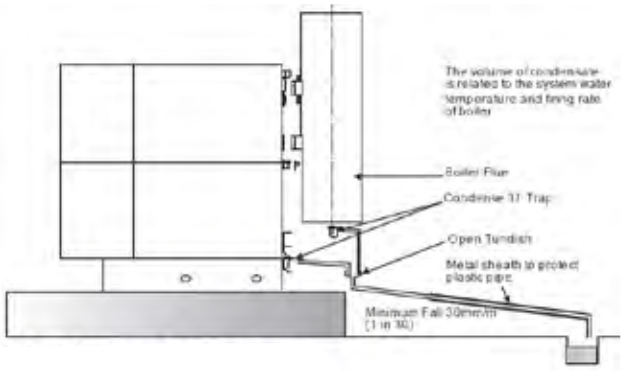

Fig 6. Boiler Condensate Piping Installation

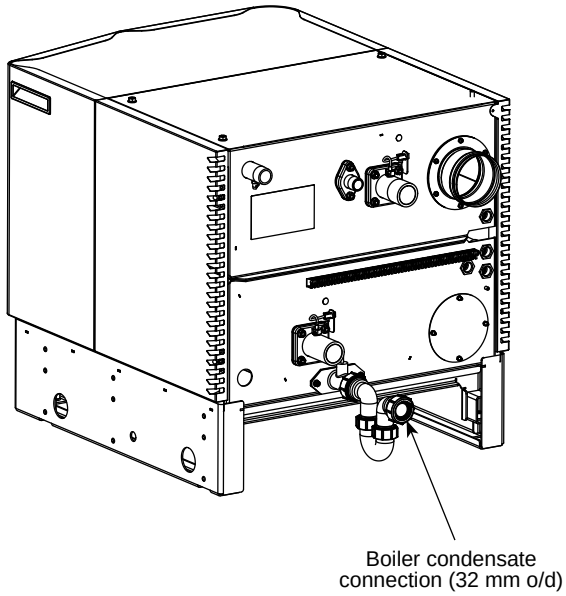

Fig 7. Boiler Condensate Connection

4.6 Electrical Supply

⚠ WARNING: This Appliance MUST be earthed in accordance with IEE Regulations.

- A mains supply of 230 V, 50 Hz is required, using the supplied connector X20.
- External fuses should be rated for 10 amps
- All external wiring connected to the boiler must meet the requirements of the newest issue of the BS 7671, IET Wiring Regulations, and all local authority regulations. The wiring must meet the requirements of BS EN 50525-1:2011 and BS EN 50525-2:2011. It must also be 3-core PVC insulated cable of Type 3183Y, and Harmonised code H05VV-F.
- All connections between the boiler and the electrical power supply must include an isolation device to separate the boiler from the electrical supply. The isolator device must be easily accessible to the user after it has been installed.
- Electrical supplies to boiler modules should only serve the boiler using the conduits supplied. High & low voltage cables should be separated into individual conduits.

ⓘ IMPORTANT: Additional information regarding electrical supplies is given in BS EN60335, Part 1.

Note. The appliance must be isolated from the electrical supply if electric arc welding is carried out on connecting pipework.

For detailed wiring instructions see *Section* Appendix B. Electrical Supply & Controls Connections & Fig 35

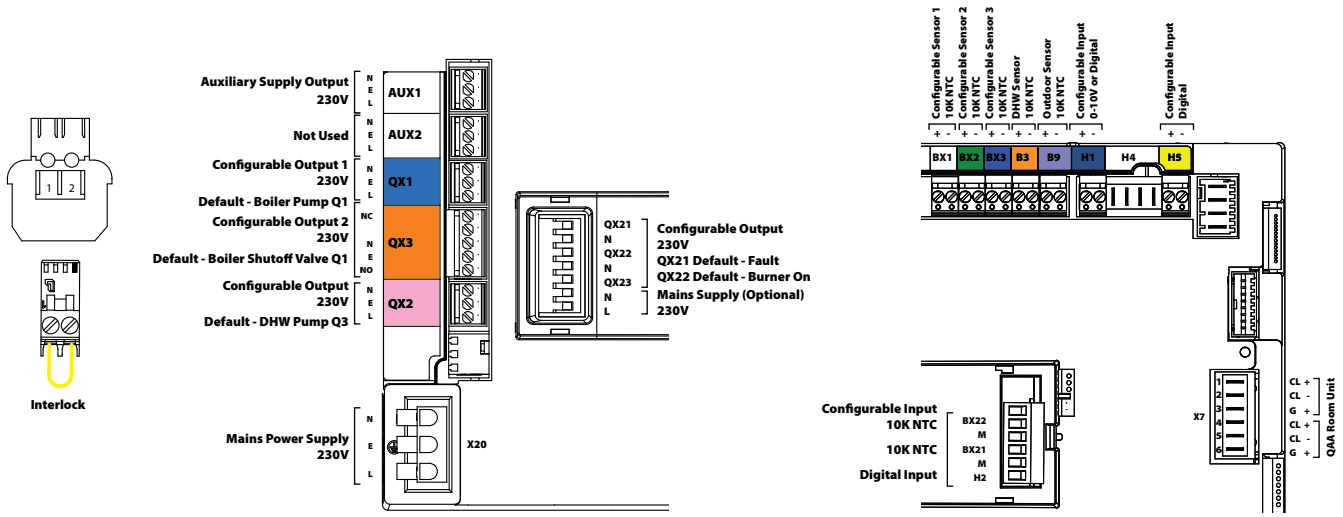

Fig 8. Boiler Electrical Connections

5.0 BOILER ASSEMBLY

5.1 General

Boilers are dispatched to site as fully assembled units. The flue collector box (stacked models only) and pipework manifold set (where applicable) are the only items that will need assembling on site.

Where access is a problem, stacked models can be broken down into individual modules and then re-assembled in the appropriate location in the plant room - see Section 5.2 Site Disassembly.

During dismantling and assembly it is important to take care to prevent damage to the boiler casing.

Boiler positioning must allow the minimum clearances detailed in Section 3.0 Size and Space Requirements to facilitate access for flue and pipework connections as well as maintenance.

5.2 Site Disassembly

The individual modules are secured by 4 x M8 bolts securing the boiler frames together - see Fig 9 *and* Fig 10 to access the M8 bolts;

- Remove the M8 socket head screw securing the top module front cover and carefully lift the cover up, disengaging the locating bracket while lifting off the cover. Carefully place the cover aside for re-assembly.
- Remove the pozi screw securing the top panel to the boiler frame and remove the top panel, placing aside for re-assembly.
- Remove the pozi screw securing the left hand side panel at the rear of the boiler and carefully disengage both casing side panels from the M6 ball studs.
- Access the 4 X M8 bolts (2 per side) and withdraw the bolts from the frame. The top module is now free to carefully lift off the lower module.

⚠ WARNING: The top module is heavy and will require the appropriate use of lifting methods & equipment (155 kg 97-116 models & 200 kg 147-254 models).

- 4 x M8 lifting eyes must be placed in the M8 holes in the top of the boiler frame to provide lifting points.
- With the base module in the appropriate position, carefully rebuild the stacked modules, securing with the M8 bolts and refit the side panels, top cover and front cover.

5.3 Boiler Assembly

- With the boiler in its desired location, loosely engage the flue collector ducts into each other and position such that the spigots will fit into the respective flue sockets at the rear of the boiler. When assembling the flue ducts, it is advisable to lubricate the seal located in the socket fittings to enable easy movement and adjustment.
- Fit and secure the bottom closing plate to the base of the duct assembly.
- Do not fit the flue collector at this stage as it may restrict access to the other connections.

ⓘ IMPORTANT: When modules are arranged in banks of 2 or 3 high, adjacent to each other, it is advisable to fit the water and flue connections to each individual bank prior to fitting the connections to the adjacent bank(s).

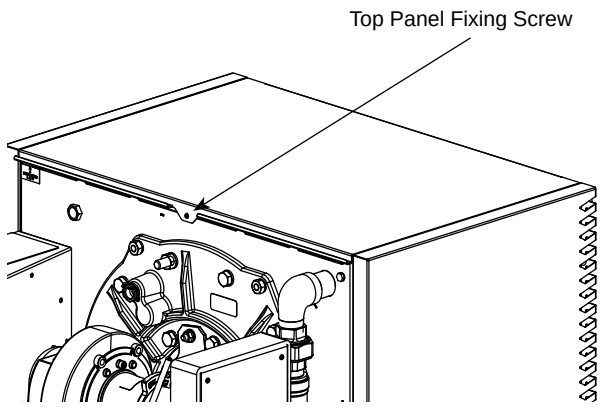

Fig 9. Module Fixings - Top Panel Fixing Screw

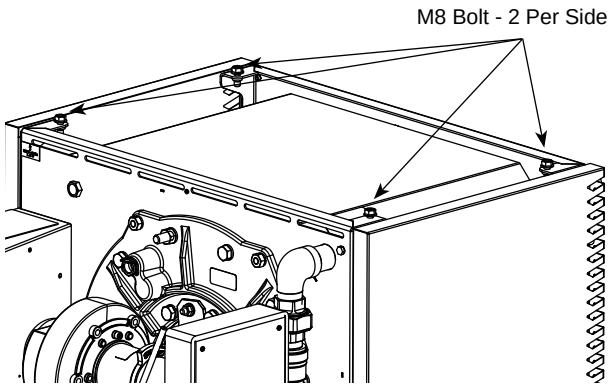

Fig 10. Module Fixings - M8 Bolts

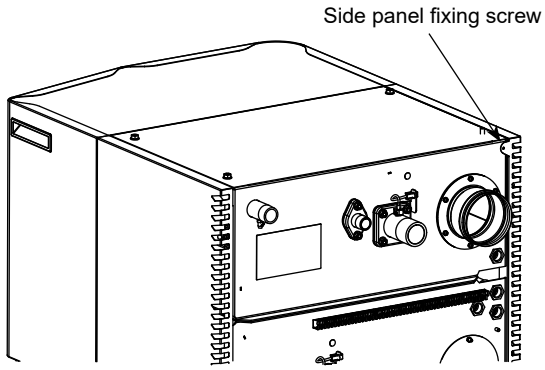

Fig 11. Module Fixings - LH Side Panel Fixing Screw

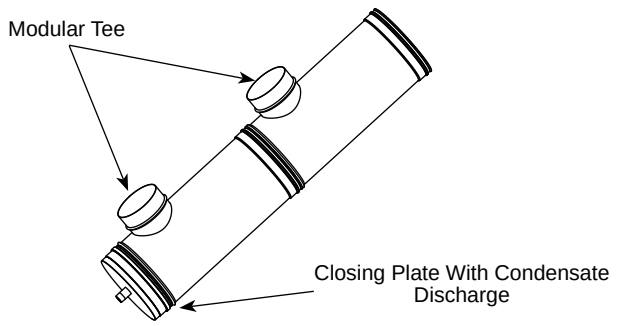

Fig 12. Flue Collector Box Assembly

Prior to fitting the flue collector assembly, check all water and gas connections for soundness.

Lubricate the seals on the boiler flue spigot to enable easy movement and adjustment.

Adjust and fit the assembled flue collector box to the boiler flue spigots and fit the condensate drain discharge pipe to the base of the flue using the fitting supplied.

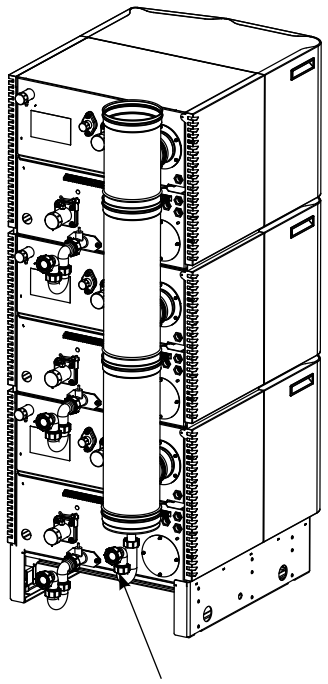

Fig 13. Flue Header Connection

5.4 Water Connections

The following connections are provided on each boiler module.

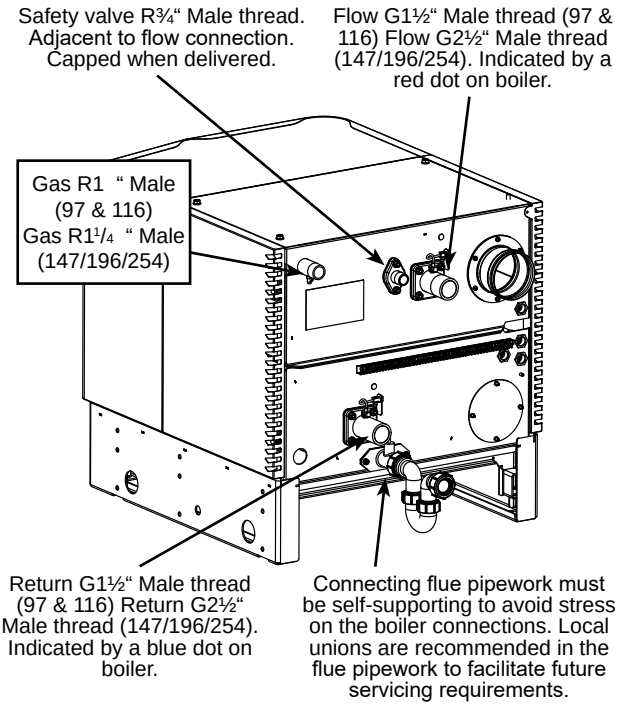

Fig 14. Rear Water Connections

5.5 Open Vented Systems

Boiler flue ways must not be able to be blocked or isolated from the vent pipe. Only three way valve are allowed to be used between the boiler and the vent pipe so that it is open to atmosphere. Safety valves must be mounted on the boiler using the connection provided.

5.6 Sealed Systems

Boilers must not be capable of isolation from the safety valve. Valves between the boiler and the safety valve are to be three way so that when boiler is isolated from the safety valve it is open to atmosphere. Hamworthy Heating Ltd recommend using the safety valve connection provided on the boiler.

Where using Hamworthy Heating Ltd pipework kits, assembly of these is detailed in the Pipe Kit Manual.

5.7 Electrical Connections:

The following electrical connections are provided on each module.

- Supply: Live, Neutral and Earth. See Fig 8 for details.
- Fault Alarm & Normal Run Signal Output
- 0-10 v Analogue Control Signal Input
- Remote on/off Control Input
- 230 V Configurable Outputs
- Safety Interlock Input
- Optional Cascade Kit for Internal Master/Slave sequencing.
- QAA Room Controller Input

6.0 PRE-COMMISIONING

The following pre-commissioning checks must be carried out before the boiler is commissioned.

6.1 Gas Supply

Make sure that gas installation pipework and meter has been soundness tested and purged to IGE/UP/1 or IGE/UP/1A as appropriate. Test and purge certificates should be available for viewing.

6.2 Ventilation

Make sure that ventilation and air supply to plant room is correct. Air supply slots in casing panels are clear and open.

6.3 Pipework, Valves and Pump

Make sure that;

- Pipework and valve arrangement is installed to Hamworthy Heating recommendations.
- Circulating system is full of water, vented and pressurised appropriately and the water quality checked.
- Circulation pump is fitted, working and interlocked where required.
- Pipework connections to boiler are fitted correctly.
- All necessary isolation valves are open.
- Safety valve is correctly sized and located.
- Condensate connections on boiler and flue are connected and piped to drain.
- Heat load is available.

6.4 Flue

Make sure that;

- Flue system is correctly designed and installed to suit boilers.
- Flue passages to chimney are clear.

6.5 Electrical

Make sure that;

- Electrical connections are correct and isolatable.
- External controls are operational.

⚠ WARNING: when the front cover is removed and the boiler is operational, care must be taken with electrical components and access to primary insulation.

7.0 CHECKS PRIOR TO LIGHTING

ⓘ IMPORTANT: Before proceeding make sure that the pre-commissioning checks in section 8.3 Ignition Controller Check onwards have been carried out and the results satisfactory.

7.1 Boiler Gas System Leak Check

Remove front cover, by unscrewing the retaining bolt & make sure that the appliance manual gas service valve is in the OFF position. Although the boiler receives a gas leak check and gas train component integrity check prior to leaving the factory, transport and installation may have caused disturbance to unions, fittings and gas valve assemblies etc.

Note. Main Gas Supply Pressures are as follows;

- Natural Gas - 20 mbar
- LPG - 37 mbar.

The whole of the gas installation, including the meter,should be inspected and tested for soundness and then purged in accordance with the recommendations of the relevant standard (IGE/UP/1 Soundness testing and purging of industrial and commercial gas installations.)

7.2 Checks

Refer to Appendix A, Gas Data Tables, for maximum inlet pressure for normal operation.

The Following checks must be made prior to lighting the boiler;

1. Make sure that the gas supply is connected, but the boiler module gas service (isolating) valve(s) are closed, any unions or fittings are correctly tightened and test points are closed.

2. Make sure the electrical mains supply is correctly connected but the boiler module isolator(s) are switched off. Check all wiring loom connections such as fan or gas valve are correct and secure. Remove the clip, limit stat bulb and tension spring from the pocket in the front of the heat exchanger, and carefully apply a heat source to the bulb.

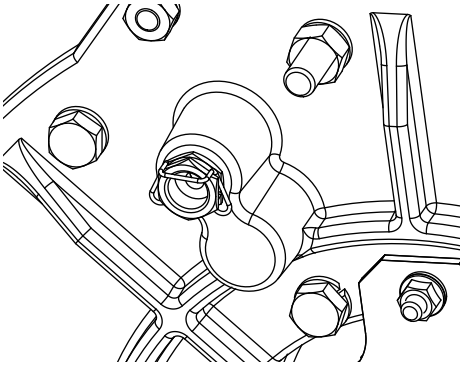

Fig 15. Overheat Stat Pocket

Note. Take care not to damage the tension spring in removal and replacement!

Check the continuity with a meter. If satisfactory, refit the bulb and tension spring in the pocket and secure with the clip. Make sure that all thermistor are fully inserted into their pockets. The flow and return sensor are located at the rear of the boiler in the flow and return pipes.

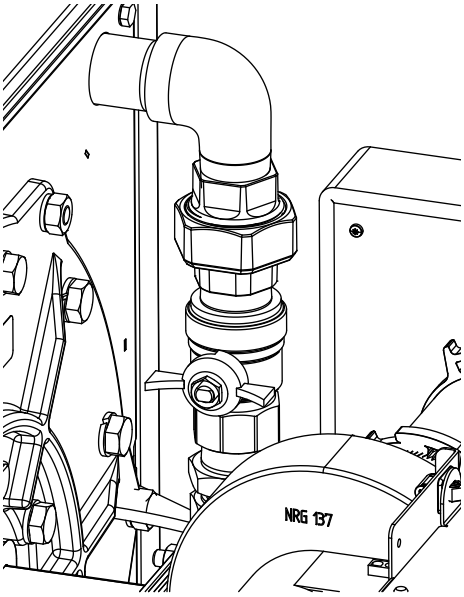

Fig 16. Gas Isolating Valve (97 & 116 shown)

3. The flame ionisation signal generated whilst the boiler is firing, can be viewed directly from the display by accessing information level. The value is set to read dc µA. Refer to the separate PCB manual.

4. Before attempting to start the appliance, make sure that all parts of the appliance are clean and free of debris Special attention should be paid to ensuring that the inlet to the venturi via the air filter is clean and unobstructed.

5. Make sure the heating system circulation / shunt pump is operational and that the pipework is free of air.

6. The flame ionisation signal generated whilst the boiler is firing, can be viewed directly from the display screen. The value is set to read µA DC.

⚠ WARNING: When the front cover and air filter are removed and the boiler is operational, it is possible for articles of clothing or long hair to be drawn into the venturi/fan.

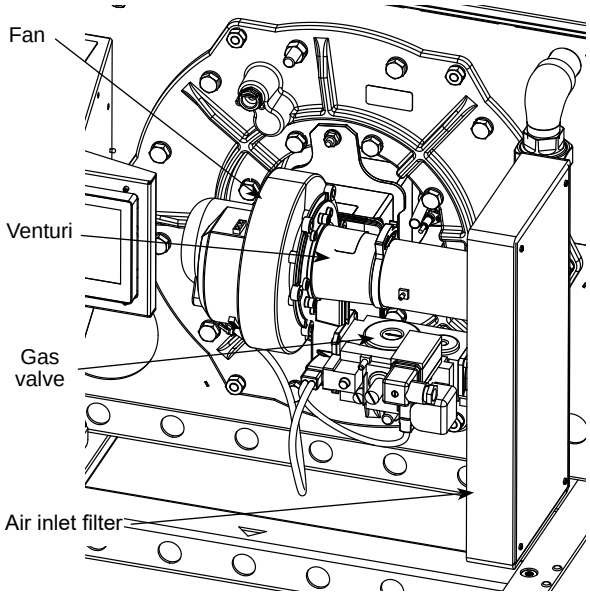

Fig 17. Venturi & Gas Valve (97/116/147 kW shown)

8.0 INITIAL LIGHTING

Only competent persons registered for working on non-domestic gas appliances should attempt the following operations. Before attempting to commission any boiler, make sure that personnel involved are aware of what action is about to be taken.

8.1 Fire up the boiler

Carry out the following procedure to fire up the boiler:

1. Make sure the boiler module gas service (isolating) valve is closed see Fig 18.

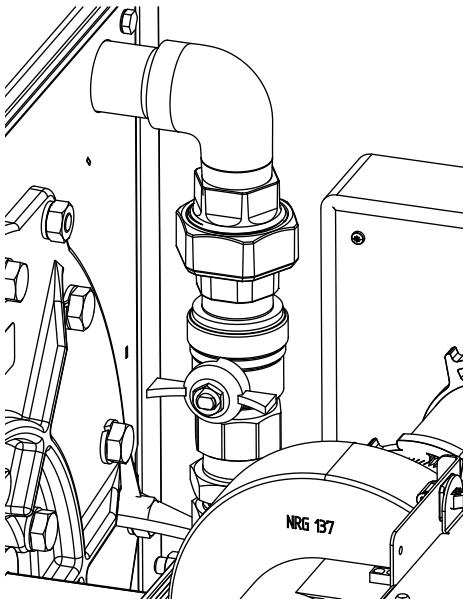

Fig 18. Gas Isolating Valve

2. Switch on the electrical supply, and initiate the start up sequence.

3. As the gas valve is closed, the low gas pressure switch will prevent the boiler from firing and the error code 'E132' will be displayed on the screen.

4. If the above procedure occurs correctly, open the gas isolating valve and the fault indication will extinguish.

The boiler will commence its ignition sequence as previously described. This time, when the gas valve is energised the burner will ignite

5. With the burner firing, the flame signal displayed, should be approximately 9-12 µA.

- At the end of the ignition proving period, 5 seconds, the Hot Surface Igniter (HSI) system will be switched off.
- After a period of 15 seconds the fan will alter speed and the burner modulation will be set according to the heat load.

⚠ CAUTION: The boiler is equipped with a restart facility and will attempt a second ignition, during which the above procedures will be repeated. At the end of the restart procedure, if no flame is detected after the flame proving period, the boiler will lockout. The boiler will not operate until the lockout has been manually reset.

8.2 Controls Operation

Each ModuMax boiler is controlled by a PCB boiler controller.

The controller functions, settings and configurations are accessed via the touchscreen.

Comprehensive details and instructions on setting and using the boiler controller can be found in the separate PCB instruction manual, which is supplied with each boiler.

A concise user instructions guide is supplied with each boiler. This guide gives instruction on initial set up as well as a list of possible error codes.

The Touch Screen controller is located on the main control panel assembly which can be accessed after removal of the boiler front cover (Fig 19).

Note. Should remedial work need to be carried out on a module, then the non-firing module must be electrically isolated so as to prevent accidental operation in the event that the installation is required for ongoing heating requirements.

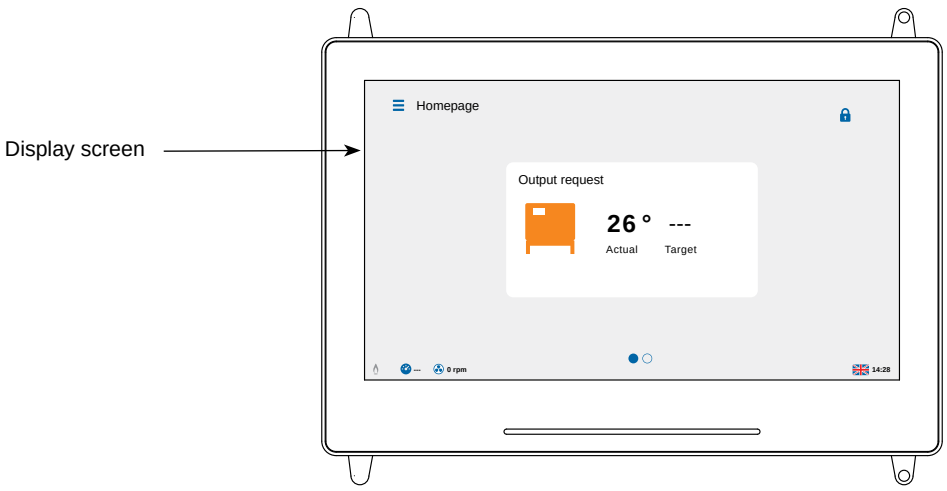

Fig 19. General Overview of Touchscreen

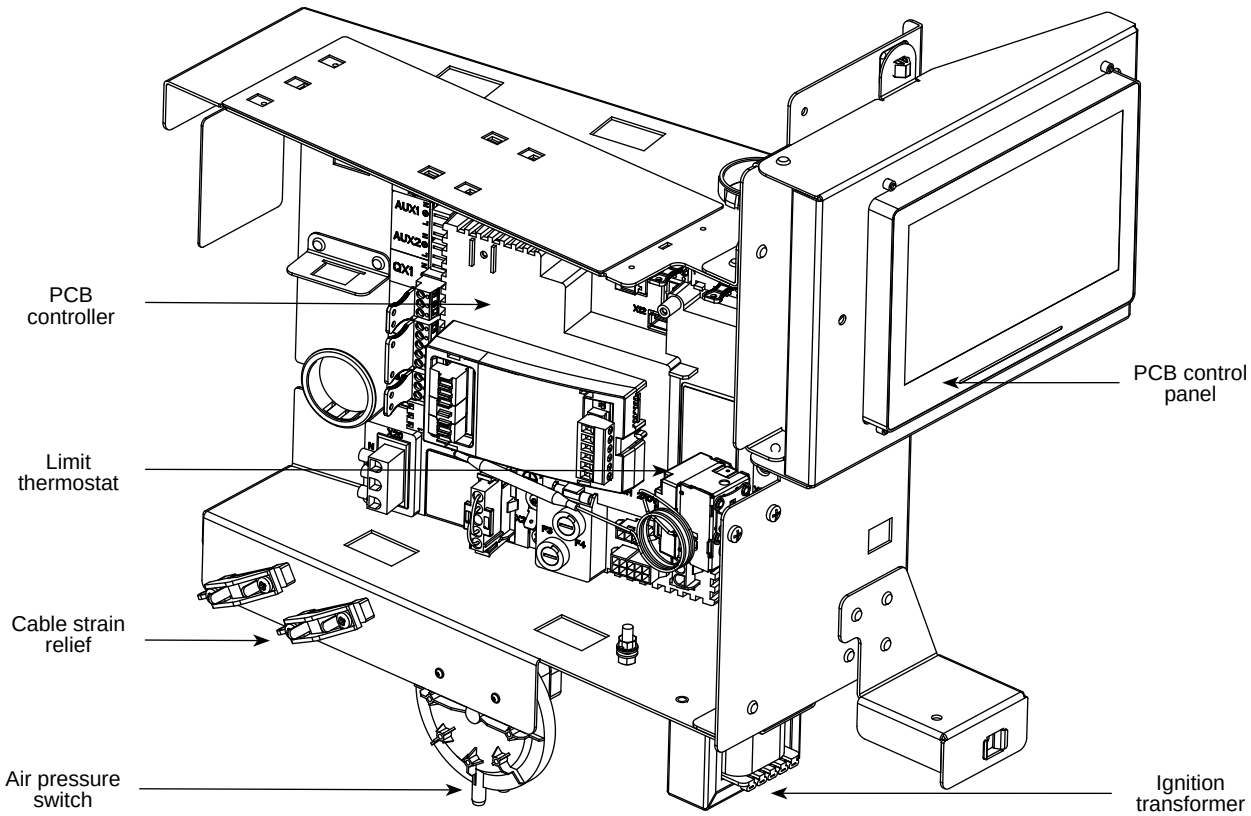

Fig 20. General Overview of Controls

8.3 Ignition Controller Check

1. To check for correct operation of the ignition controller, close the gas valve. The boiler should shutdown after approximately one second and attempt a re-ignition. Check that the flame has been extinguished

8.4 Gas Supply Pressure Check.

When the boiler modules have been checked for correct operation the gas supply pressure should be checked. This should be done with all modules firing.

- For Natural Gas, a nominal gas inlet pressure of 20 mbar measured at the rear of the boiler is required, with a maximum inlet pressure of 25 mbar.
- For LPG, a nominal gas inlet pressure of 37 mbar measured at the rear of the boiler is required, with a maximum inlet pressure of 45 mbar.

8.5 Combustion Checks

The boiler modules are factory pre-set, but site checks must be done to confirm correct performance.

Note. The appliance can be converted to LPG using conversion kits available from Hamworthy Heating. All conversions must be performed by a suitably qualified engineer and in accordance with instructions provided with the kits.

1. Use an appropriate tool to remove sample point plug from front of combustion chamber (see Fig 21).

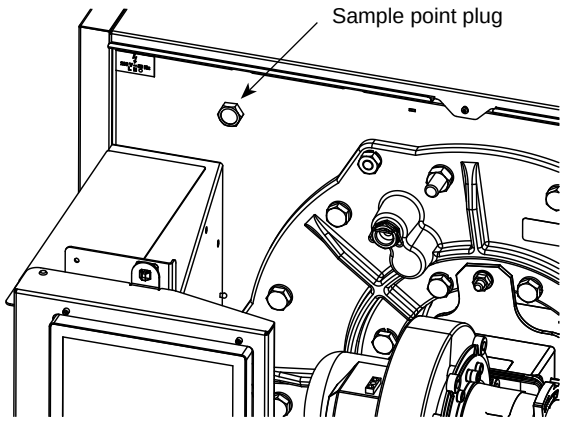

Fig 21. Removal of Sample Point Plug

2. Make sure that an insertion distance of 200 mm is set on the combustion analyser probe.

Note. This distance must be set to make sure accurate analysis of flue gases.

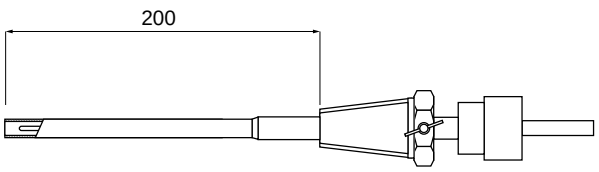

Fig 22. Combustion Analyser Probe Setting

3. Insert probe horizontally into combustion chamber until depth stop is met.

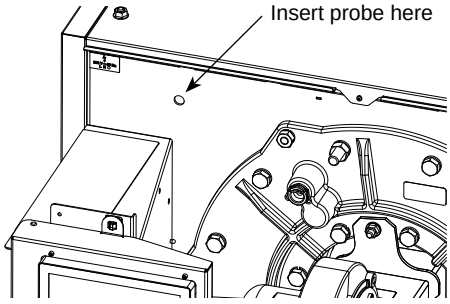

Fig 23. Insertion of Analyser Probe

8.6 Servicing

On the Homepage, press the Menu Icon.

The Menu Page will now be displayed, shown in Fig 24.

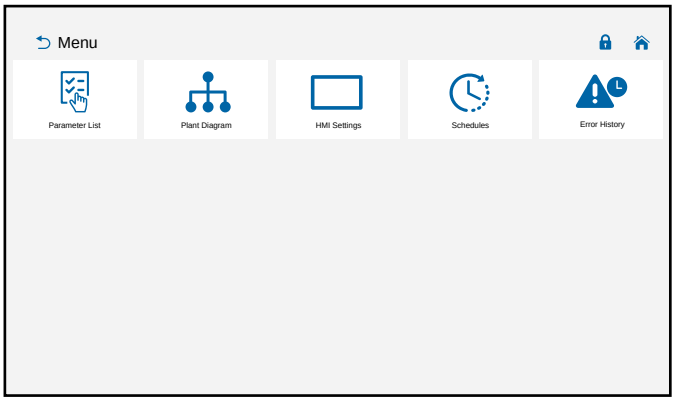

Fig 24. Main Menu Screen

On the Menu Page, Press the Access Level Icon

The Access Level Page will now be displayed, shown in Fig 25.

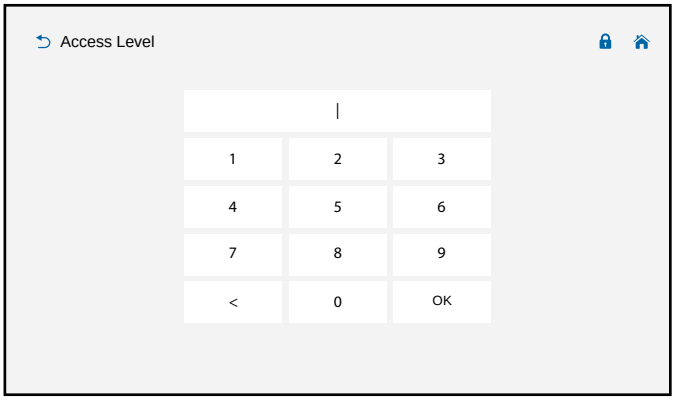

Fig 25. Access Level Page

Use the keypad to enter the code “12434” and then press the “OK” key.

The Menu Page will now be displayed, shown in Fig 26.

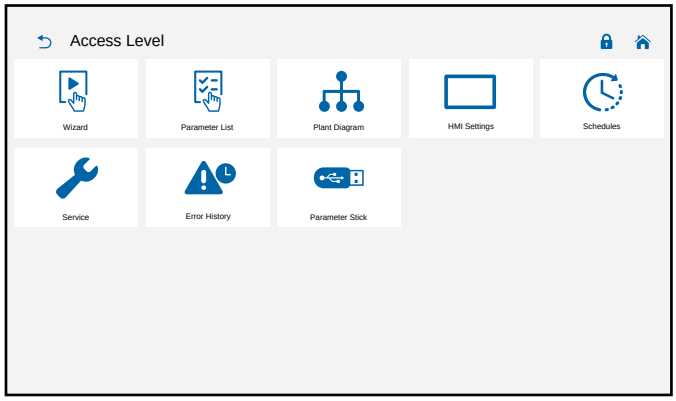

Fig 26. Main Menu - Access Level Enabled

On the Menu Page, press the Service Icon

The Service Page will now be displayed, shown in Fig 27.

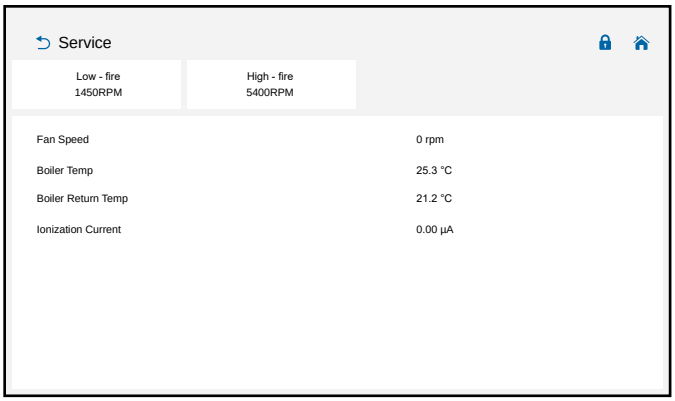

Fig 27. Service Screen

Locate the Throttle Screw on the Gas Valve, as shown in figures Fig 28 and Fig 29.

Note. If a cap is present, please remove this first.

97 / 116 / 147 kW

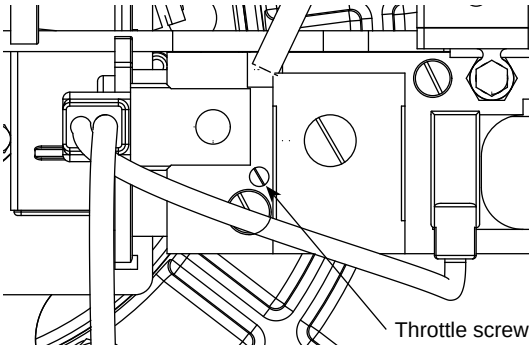

Fig 28. Adjusting Gas Valve Throttle

196 / 254 kW

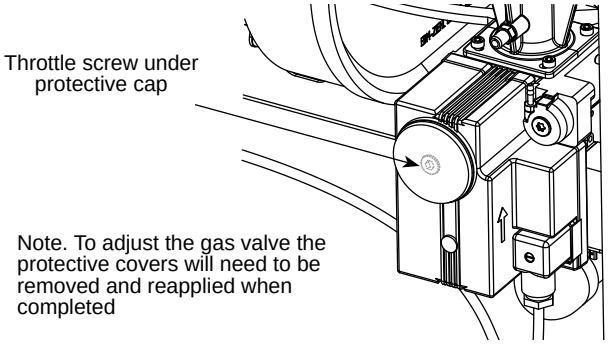

Fig 29. Adjusting Gas Valve Throttle

After locating the Throttle Screw, Press the High-fire tab.

The Service Page will now update as shown in Fig 30.

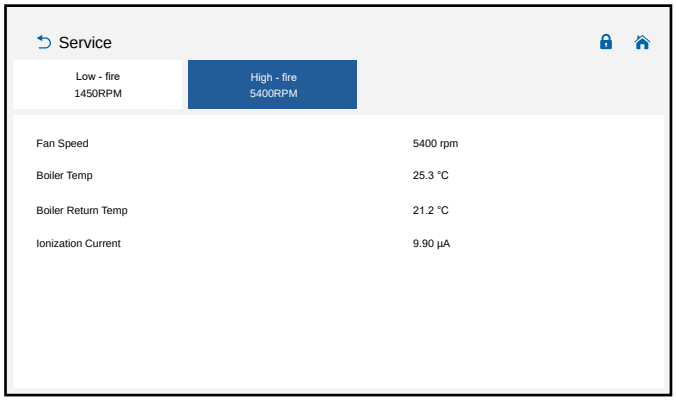

Fig 30. Service - High Fire

Wait for the boiler to fire and stabilise at the High-fire fan speed.

Once the boiler has stabilised at Maximum Rate, adjust the Throttle Screw on the Gas Valve, until the CO_2 measures:

Nat Gas	- 9.0% ± 0.25%
LPG	- 10.6% ± 0.25%

Note. Clockwise rotation reduces the CO_2 & Anti-clockwise rotation increases the CO_2.

Once the Gas Valve has been set at Maximum Rate, Press the Low-fire tab.

The Service Page will now update as shown in Fig 31.

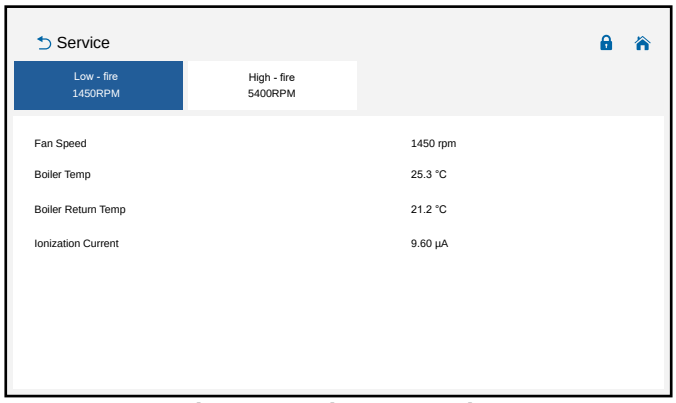

Fig 31. Service - Low Fire

Wait for the boiler to stabilise at the Low-fire fan speed.

Once the boiler has stabilised at Minimum Rate, locate the Offset Screw on the Gas Valve, as shown in Fig 32 & Fig 33.

97 / 116 / 147 kW

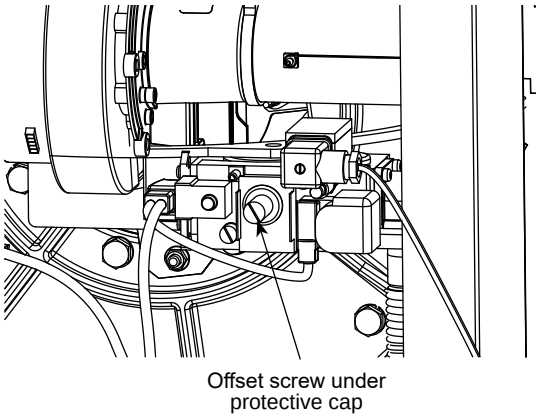

Fig 32. Adjusting Gas Valve Offset

196 / 254 kW

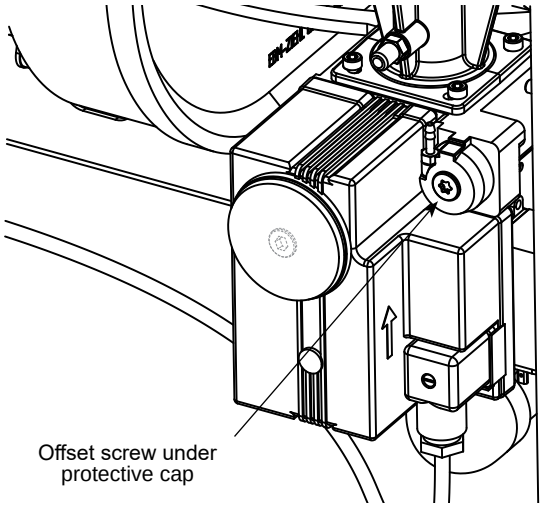

Fig 33. Adjusting Gas Valve Offset

After locating the Offset Screw on the Gas Valve, adjust the Throttle Screw on the Gas Valve, until the CO_2 measures:

Nat Gas	- 9.0% ± 0.25%
LPG	- 10.6% ± 0.25%

Note – Clockwise rotation increases the CO_2 & Anti-clockwise rotation reduces the CO_2.

If the CO_2 measured is within this range, Press the Low-fire tab, completing the gas valve setup. The Service Page will now update as shown in Fig 34.

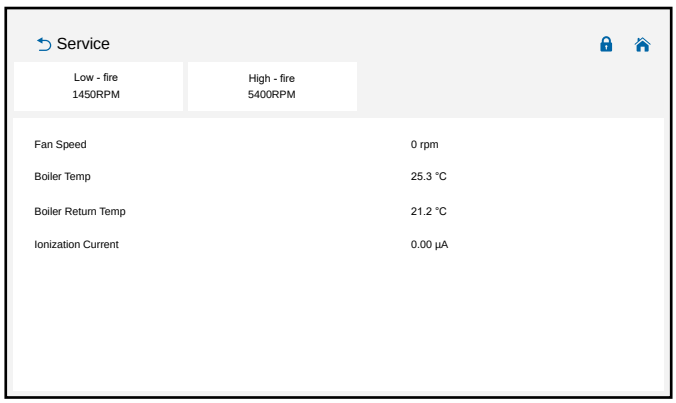

Fig 34. Service Finish

⚠ CO must not exceed 200 ppm at maximum rate or 60 ppm at minimum rate.

CO above these figures indicates poor combustion and the appliance must not be operated in this condition.

If combustion readings fall within the required range the boiler module is set and operating correctly. If the combustion readings fall outside the required range the burner settings will require adjustment.

CONTACT HAMWORTHY HEATING TECHNICAL DEPARTMENT FOR FURTHER DETAILS

Shut down the boiler and isolate from the electrical supply. Remove instrumentation and replace test points and plugs.

8.7 User Instructions

When the boiler is fully commissioned, the owner or their representative should be made aware of the lighting-up and operating instructions. A practical demonstration should be given describing each functional step. This Installation and Commissioning guide, the servicing instructions manual and the user's instructions should then be handed over and be kept in a safe place for future reference

9.0 FAULT FINDING

The ModuMax boiler is equipped with full self-diagnostic fault indication, with faults being allocated a code. A lockout will be denoted by a flashing LED on the fascia panel which will also be constantly illuminated by a block error - **refer to the separate PCB manual**.

The common fault codes are detailed in **the separate user instructions guide**. Fault codes not detailed in this manual should only be investigated by an Engineer.

ⓘ Should a fault code appear which cannot be reset, or a fault code repeatedly occurs, contact Hamworthy Heating for assistance. Do not continue to operate or use the boiler as this may cause damage to the controls

9.1 Safety Temperature Limiter (Limit Thermostat)

1. The Boiler Controller PCB has several safety levels built in such that a controlled shutdown should occur before the safety temperature limiter is activated. Should these safety levels be overridden (say external pump overrun failure after shutdown) the safety temperature limiter will trip initiating a boiler shutdown, preventing the boiler from firing. A code on the controls display will flash indicating that the safety temperature limiter has tripped.

2. The limit thermostat (mounted on the control panel assembly - visible after removing the front cover) will automatically reset after the boiler returns to a normal operating temperature.

3. Always carry out an investigation to ascertain the reason for overheating. The most common cause of overheating is a lack of water flow rate through the boiler - possibly due to external pump problem.

9.2 Ignition Controller

1. The flame is under constant supervision by the burner ignition controller. The controller monitors the flame's ability to rectify an AC current. If the flame diminishes for whatever reason and the rectified current drops below the controller's minimum detection current, the controller will de-energise the gas control valve within 1 second and commence a restart. Failure to establish and detect a flame during the light-up sequence will result in burner shutdown and lockout after two attempts, requiring a manual reset to restart the ignition sequence.

2. If the boiler continues to lockout, then an investigation must be made to ascertain the cause.

3. A false flame signal at the start and during pre-purge will cause the boiler module to restart its ignition sequence at the end of the pre-purge period. If this occurs 3 times in succession the controls will lockout and disable operation of the boiler module, requiring reset of the module.

NOTES

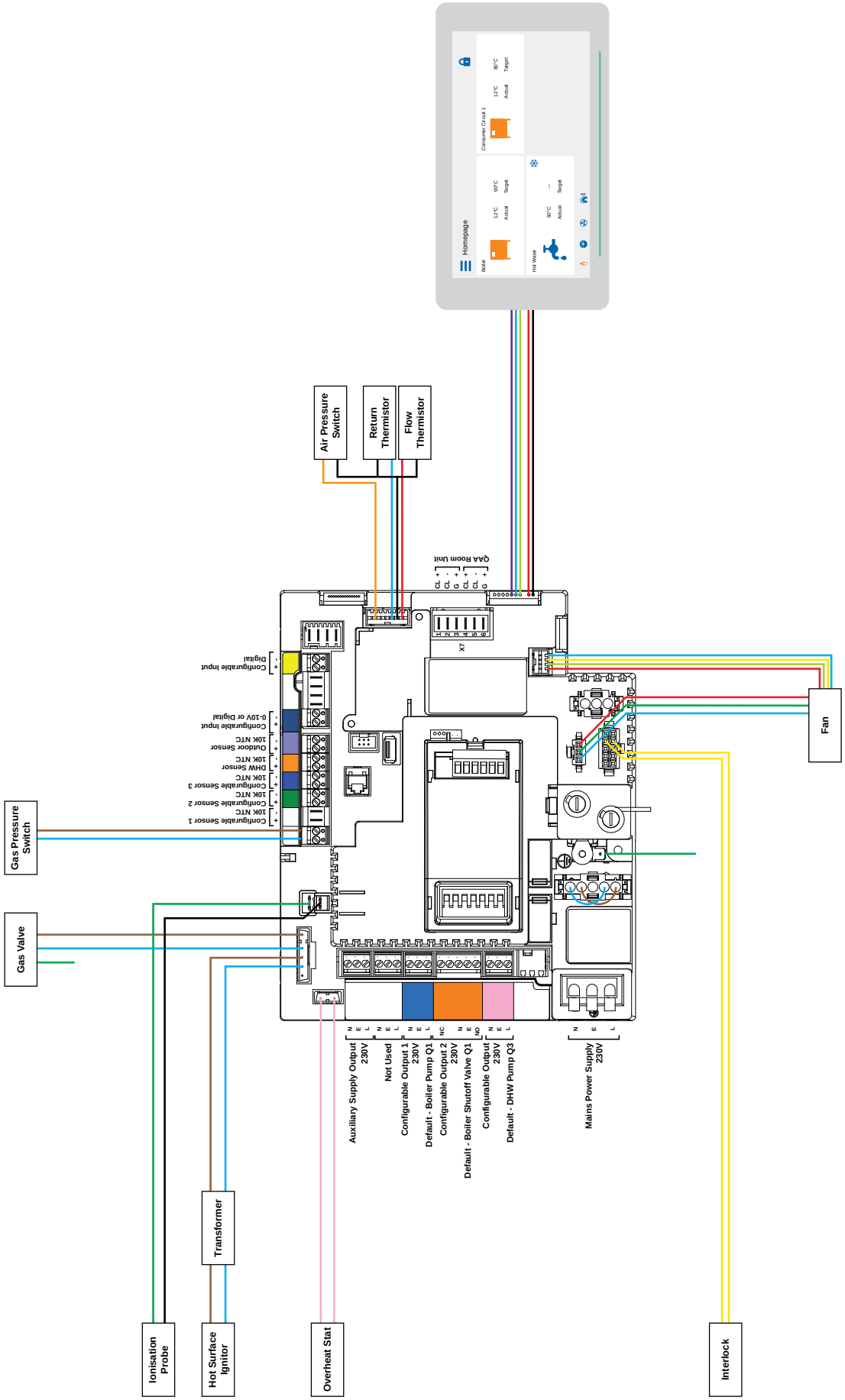

Fig 35. Wiring Diagram

10.0 SERVICING

A competent person registered for working on non domestic gas appliances should check and make sure that the flue, its support and terminal, the ventilation to the boiler house, safety valve, drain, water filter if fitted, pressure gauge, etc.; are in a serviceable and working condition and still comply with the relevant standards and codes of practice - see Section 4.0 Site Location and Preparation.

10.1 Regular Service

Regular servicing is recommended, preferably by a Hamworthy trained person, and at least annually, to make sure trouble free operation.

For ModuMax, Hamworthy would recommend an additional 6 monthly examination following commissioning, acknowledging site conditions and running hours.

Although cleaning of flue ways may not be necessary on a yearly basis, it is important that all controls and safety features are checked for correct operation.

Note. Measuring flue gas CO_2 and gas temperatures will give an indication of the state of the boiler flue ways and waterways. Results should be compared with previously measured values to establish possible loss of efficiency.

Should remedial work need to be carried out on a module, then the non-firing module must be electrically isolated so as to prevent accidental operation in the event that the installation is required for ongoing heating requirements.

10.2 Annual Service

The procedure detailed relates to a single module and MUST be carried out on ALL individual modules which constitute a unit. Before servicing the boiler, the following procedure must be carried out :-

⚠ WARNING: Isolate all electrical supplies and turn off the gas service valve.

1. Remove the front casing door by unscrewing the central retaining bolt.

2. Disconnect the Hot Surface Ignitor (HSI) and flame probe connectors from the respective probes. Remove the earth lead from the flame probe.

3. Disconnect the fan power supply and control leads from the fan taking care with the latch on each connector.

4. Check that the gas service valve is closed, then undo the lower connection union on the flexible hose (at gas service valve connection).

5. Carefully remove the electrical plug from the gas valve and remove the Low Gas Pressure Switch.

6. Remove the air inlet filter box. Refer to section 11.15

7. Remove the 2 M8 burner retaining nuts and carefully withdraw the complete burner/ fan assembly from the heat exchanger. Separate the burner fabrication from the fan, venturi and gas control valve by unscrewing the 4 M8 nuts and bolts.

8. Remove and inspect HSI and flame probe, make sure they are free from debris or deposits. Test the electrical resistance value of HSI & if above 200 ohms (cold), replace the HSI. Check respective positions – See Fig 36

Note. The HSI element is very fragile.

9. Check the burner and clean using a soft brush if required (if possible use a vacuum cleaner to remove the dust from inside the burner tube). After cleaning the inside, the burner tube can be washed using clean water. Tap the burner flange firmly downwards on a block of wood to dislodge any residual debris from inside the burner tube. A damaged or cracked burner should be replaced.

Note. Do not use a wire brush to clean the burner.

10. Check and clean the filter medium by washing in warm soapy water.

⚠ WARNING: Do not operate the boiler with the filter removed.

11. Separate the gas valve from the venturi & make sure venturi mouth and gas feed tube are clean and free of obstruction.

12. Inspect the fan scroll and impeller, clean and check for damage.

13. Inspect the non return valve in the burner inlet duct for smooth operation. If venturi is removed it must be put back in exactly the same position.

14. Separate the inlet flange and elbow fitting from the gas control valve by removing the 4 X M5 socket cap head screws. Check that the mesh inlet filter in the gas valve is clear of debris, remove any foreign objects caught in the filter.

Re-assemble in reverse order taking care to inspect and if necessary, replace any o-rings, gaskets or seals.

Test all gas joints broken or disturbed for soundness before firing.

Carry out a combustion check in section 8.5 by testing the flue gas CO_2 and CO levels as detailed in Section 8.3 Ignition Controller Check.

10.3 Four Year Service

Repeat the annual service as previously described but do not refit any components to the heat exchanger.

10.3.1 Clean the Heat Exchanger

To clean the heat exchanger, the use of a high pressure water hose (40-80 psi) is recommended. However provision must be made for the drainage of water used in this process. At the rear of the boiler module remove the condensate trap assembly from the casing by unfastening the 2 X M6 nuts, to expose the opening in the casing. The cleaning water and any debris will exit the casing through this opening. On completion make sure that the opening is clear of debris and refit the condensate trap assembly, renewing the gasket if required.

Should a high pressure hose not be available, the heat exchanger will have to be removed from the module casing. Isolate the heat exchanger from the flow and return water pipework and drain down. Remove all fittings from the water flow and return connections (including sensors and pockets) and remove the safety valve (if fitted) or ¾“ cap. Unfasten the 10 X M8 nuts securing the water connection sealing plates and the safety valve pipe sealing plate, and remove all sealing plates and o-rings.

The boiler heat exchanger assembly is heavy, 97 & 116 weigh 100 kg each & 147/196/254 weigh 130 kg. It is recommended that a suitable lifting apparatus is used to support the weight of the heat exchanger, an M12 lifting eye nut can be fitted to the M12 stud at the top of the heat exchanger front plate for this purpose.

Remove the 6 X M10 nuts that retain the heat exchanger into the boiler module casing, and with the front end supported slowly withdraw the heat exchanger until the rear of the stainless steel baffles are visible. With the rear of the heat exchanger resting in the body of the boiler and the front supported by the lifting apparatus, access is gained for removal of the stainless steel baffles. The silicon sealant between the baffle and the end plates must be peeled away, before attempting to remove the baffles. Unhook the stainless steel springs and remove the baffle plates to expose the finned tube bank. Wire brush both sides of the baffles to remove any deposits. Thoroughly wire brush the finned tubes and make sure that all debris is removed from the centre of the heat exchanger.

Remove the heat exchanger from the boiler body.

Remove the bolts and nuts securing the heat exchanger front cover plate. Remove the bolts securing the heat exchanger rear cover plate. Clean and de-scale all surfaces of the heat exchanger tube header castings and cover plates, and internal surfaces of the finned tubes and water connection nipples. Chemical de-scaling is preferred for the tube bank assembly.

ⓘ IMPORTANT: Always follow the chemical manufacturer’s instructions to make sure correct application and safety.

Re-assemble the baffle plates by fitting one of the stainless steel springs and inserting the baffles beneath it, then fitting the second spring. When all the baffles are in place the gap between the ends of the baffle and the end plates must be sealed with silicon sealant. Remove the existing heat exchanger sealing gasket and fit the new gasket previously hung on the lifting eye. Clean mating surfaces of the heat exchanger tube header castings and cover plates. Re-assemble the heat exchanger assembly using new gaskets.

Make sure that the cover plates are re-fitted in the correct orientation. Evenly torque the bolts and nuts to 7 Nm.

Refit heat exchanger ensuring correct rotational orientation, so that the water connection nipples and safety valve pipe pass through the holes in the rear of the casing, fastening in place with the 6 X M10 nuts. Refit the water connection and safety valve pipe sealing plates, renewing all gaskets and o-rings. Reconnect the system pipework and check for soundness.

Make sure that the cover plates are re-fitted in the correct orientation. Evenly torque the bolts and nuts to 7 Nm.

Re-fit the burner assembly. Test all gas joints broken or disturbed for soundness before firing.

Refer to 8.0 Initial Lighting, for correct procedures.

11.0 REPLACEMENT AND FAILED COMPONENTS

⚠ WARNING: Isolate all electrical supplies to the boiler module before removing the front cover and commencing any servicing or component exchange procedure. With the front cover removed, turn off the gas supply at the service valve.

There are a number of components listed below which can be replaced simply and quickly by following the given procedure. In each case the operation of each replaced component must be checked by carrying out the appropriate part of the commissioning procedure. See Section 8: COMMISSIONING & TESTING.

11.1 Hot Surface Igniter and Flame Probe Assy.

Note. The igniter and flame probe ceramics are very fragile.

Unplug the igniter from the harness, remove the single socket cap head screw securing the igniter to the burner flange and withdraw the igniter. When fitting the replacement carefully feed the igniter through the mounting hole and secure with the socket cap head screw.

Flame Probe - The only maintenance which can be carried out is to clean the wire of any deposits with an abrasive paper, taking care not to damage the electrode. A typical flame current is 10 µA, (high fire).

Disconnect the flame probe lead & earth lead, remove the single socket cap head screw securing the probe to the burner flange and withdraw the probe. When fitting the replacement carefully feed the probe through the mounting hole taking care not to damage the ceramic.

Note. Do not remove both securing screws at the same time as the separate flange and Mica sight glass will become detached.

Make sure the positions of the igniter and probe are as recommended in Fig 36.

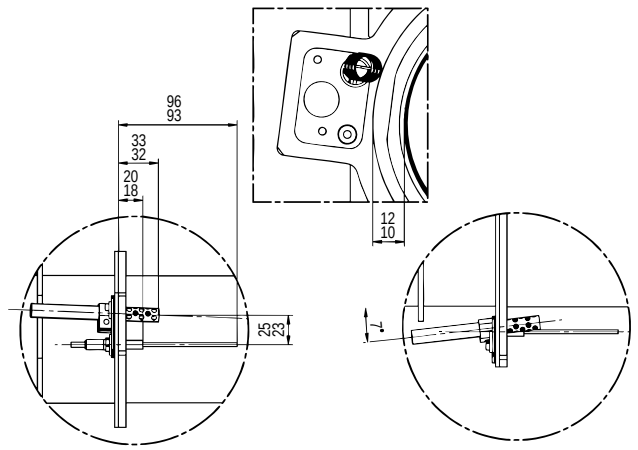

Fig 36. Hot Surface Igniter and Flame Sensing Probe Positions

11.2 Flow / Return Sensor

The two identical sensors are located in pockets on the flow and return pipes at the rear of the boiler. To remove the sensor, unplug the sensor from the harness, loosen the M3 screw securing the sensor in the pocket and withdraw the sensor.

Upon replacement make sure that the sensor is fully engaged and secured into the pocket.

11.3 Temperature Limiter (Limit Stat)

To replace the limiter, remove the boiler front cover to expose the control panel assembly. Remove the electrical connections from the limiter body noting the position of the coloured cables. Unclip and remove the thermostat bulb from the pocket in the front of the heat exchanger. Undo the 2 fixing screws in the front of the control panel and remove the unit.

Check the operation of the replacement device by carefully applying a heat source to the bulb. The temperature of the replacement limit stat is factory set and will not require adjustment.

Fit the replacement limiter in reverse order ensuring that the electrical connections are in the correct positions.

11.4 Gas Valve

Make sure that the boiler module electrical power and gas supplies are isolated. Unfasten the gas valve plug securing screws and disconnect the plug by pulling firmly away from the valve. Unfasten the low gas pressure switch plug and remove the low gas pressure switch from the gas valve (97/116/147 only) by removing the securing screw.

Remove the 4 X M5 cap head screws securing the gas valve to the gas inlet flange, allow the flange to hang free on the flexible gas pipe. Remove the 4 X M5 cap head screws securing the gas valve to the gas feed pipe, taking care to support the weight of the valve. Note that the cap head screws are different lengths at the inlet and outlet of the valve, be sure to replace at the correct positions.

Replace the gas valve complete with new ‘O’ rings, ensuring correct orientation - gas flow is in the same direction as the arrow marked on the valve. Replace the LPG orifice, if fitted. Replace the gas valve leads, ensuring correct plug positions and orientation, and secure firmly with the retained screws.

Refit the low gas pressure switch (97/116/147 only) and secure the electrical plug with the retaining screw.

Switch on the boiler module gas supply and check for integrity of all joints using a proprietary leak detector. Switch on the boiler module electrical power supply and make sure gas valve operation is correct and safe before continuing.

Before attempting to relight the appliance, refer to Section 7.0 Checks Prior to Lighting. Re-light the boiler module. For correct settings and procedures refer to Section 8.0 Initial Lighting

11.5 Combustion Fan

⚠ WARNING: Make sure that the boiler module electrical power supply is isolated before removing the front cover and gaining access to the controls.

97/116/147 kW

Disconnect the fan power supply and control leads from the fan.

Remove the 3 X M6 hex head screws, nuts and washers fastening the venturi to the gas valve. Remove the 4 X M5 screws securing the fan outlet to the burner flange and remove the fan.

196/254 kW

Disconnect the fan power supply and control leads from the fan. Separate the venturi and gas control valve from the fan by unfastening the 6 X M8 socket dome head screws. Make provision to support the weight of the venturi and gas control valve whilst not connected to the fan.

Remove the 4 X M8 hex head screws, nuts and washers fastening the fan to the burner and remove the fan.

Fit the replacement in reverse order, and if required replace any seals or gaskets.

ⓘ IMPORTANT: After re-making any gas or combustion circuit joint/connection, integrity check must be completed.

Before attempting to relight the appliance, refer to section 7 Checks prior to lighting

11.6 Venturi

Make sure that the boiler module electrical power supply is isolated before removing the front cover and gaining access to the controls. Isolate the boiler module gas supply by closing the gas service valve.

Remove the 4 X M5 socket cap head screws from the venturi gas inlet flange and separate the gas control valve from the venturi. Make provision to support the weight of the valve assembly whilst not connected to the venturi. Separate the venturi from the fan by unfastening the 6 X M8 socket dome head screws.

Fit the replacement in reverse order, and if required replace any seals or gaskets.

11.7 Burner

Disconnect the HSI and flame probe connectors from the respective probes. Disconnect the fan power supply and control leads from the fan taking care with the clip on each connector.

Unscrew retaining screws and remove the electrical plugs from the gas valve and low gas pressure switch.

97 & 116 kW

Check that the gas service valve is closed, then undo the lower connection union on the flexible hose (at gas control valve inlet elbow). Separate the burner fabrication from the fan .

147/196/254 kW

Undo the lower connection union on the flexible hose (at gas control valve inlet elbow). Remove the 2 X M8 burner retaining nuts and carefully withdraw the complete burner assembly from the heat exchanger. Separate the burner fabrication from the fan, venturi and gas control valve.

Note. Inspect the non return valve for smooth operation.

Remove and inspect HSI and flame probe, make sure they are free from debris or deposits. Test resistance value of HSI if above 200 ohms (cold), replace with a new unit. Check respective positions – See Figure 13.2.

Note. The HSI element is very fragile.

A damaged or cracked burner should be replaced.

Replace components in reverse order using new gaskets.

11.8 Ignition Transformer

Make sure that the boiler module electrical power supply is isolated before removing the front cover and gaining access to the controls.

Unplug the electrical connections to the transformer noting the orientation and relative positions. Remove the two pozi pan head screws securing the transformer to the control panel and withdraw. Fit the new unit in reverse order. Re-light the boiler and check for correct operation.

11.9 Main Control - PCB

Make sure that the boiler module electrical power supply is isolated before removing the front cover and gaining access to the controls. Also make sure that all other supplies, particularly to the volt free contact outputs, are also isolated.

If a ‘Clip in Module‘ is fitted, this must first be removed. Carefully disconnect the plug securing the clip-in to the PCB. Depress the locking latch at the connector end of the clip in to allow the module to be hinged up and disengaged from the PCB.

Unplug the electrical connections to the PCB noting the orientation and relative positions.

Fit the replacement PCB in reverse order as described above. Before replacing PCB, record all input and output settings. All required input control and output settings should then be transferred to new PCB. Re-light the boiler and check for correct operation.

11.10 Clip in Modules

Extension module
- **AGU2.550A109**

LPB module
- **OCI345.06/101**

Make sure that the boiler module electrical power supply is isolated before removing the front cover and gaining access to the controls.

Carefully disconnect the plug securing the clip-in module to the PCB.

Carefully disconnect the plug from the top of the clip-in module.

Depress the locking latch at the connector end of the clip in to allow the module to be hinged up and disengaged from the PCB or control panel.

Assemble in reverse order.

11.11 Display Screen

Make sure that the boiler module electrical power supply is isolated before removing the front cover and gaining access to the controls.

Carefully disconnect the ribbon cable connecting the screen to the PCB controller and the connectors to the power switch. Remove the 4 screws securing the screen panel to the controls pod. Unclip the screen from the panel of the controls fascia and remove the display pcb.

Remove the ribbon cable plug from the pcb and replace the display in reverse order.

11.12 Low Gas Pressure Switch

97/116/147 kW

196/254 kW

Make sure that the boiler module electrical power supply is isolated before removing the front cover and gaining access to the controls.

Isolate the boiler module gas supply by closing the gas service valve.

97/116/147 kW

Disconnect the electrical plug after removing the securing screw. Remove the switch securing screw and withdraw the switch from the Brass adapter. Fit the replacement switch in reverse order using new ‘O’ rings.

196/254 kW

Disconnect the electrical plug after removing the securing screw. Remove the screw(s) securing the switch to the gas valve body.

Fit the replacement switch in reverse order using new ‘O’ rings.

Set to correct pressure - Refer to Appendix A.

11.13 Air Pressure Switch

Make sure that the boiler module electrical power supply is isolated before removing the front cover and gaining access to the controls.

Disconnect the sensing tube from the switch (P1) noting the position. Disconnect the electrical connections (1&2) noting their position. Remove the 2 screws securing the pressure switch body to the control bracket and remove the switch. Fit the replacement unit in reverse order.

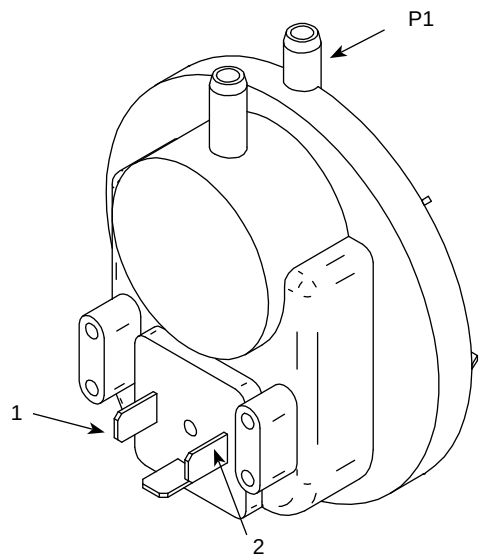

Fig 37. Air Pressure Switch

11.14 Ignition Transformer In-line Fuse

The boiler is equipped with an in-line fuse fitted between the ignition transformer and the main LMS. This T1A rated fuse can be located on the control panel once the front cover is removed. The condition of the fuse should be checked when a possible LMS malfunction has been diagnosed.

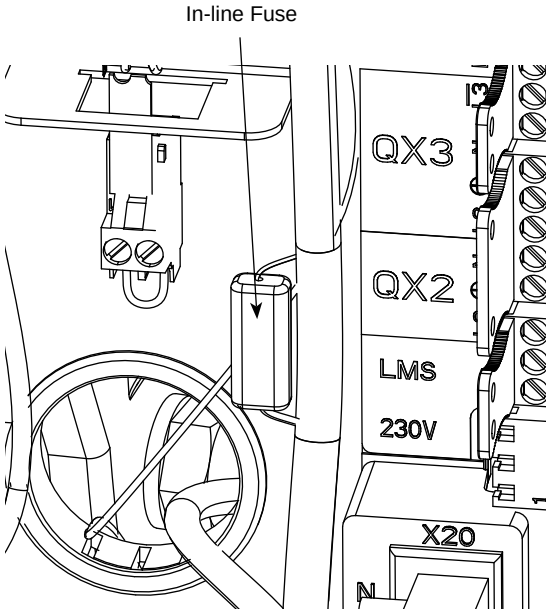

Fig 38. In-Line Fuse

11.15 Air Inlet Filter

Replacement Filter Material

The ModuMax mk4 is fitted with an air inlet filter which is accessed after removing the main front cover of the boiler.

The White filter material can be replaced at service intervals.

Remove the retaining pin from the top corner of the filter and replace with the new, clean material. Replace the retaining pin.

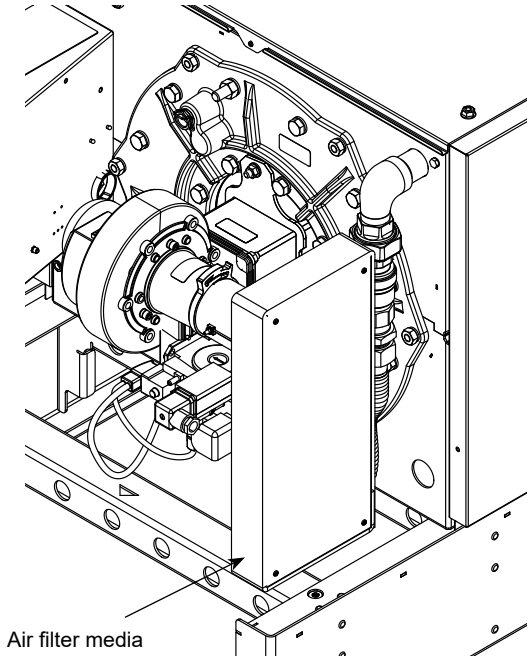

Fig 39. Air Filter

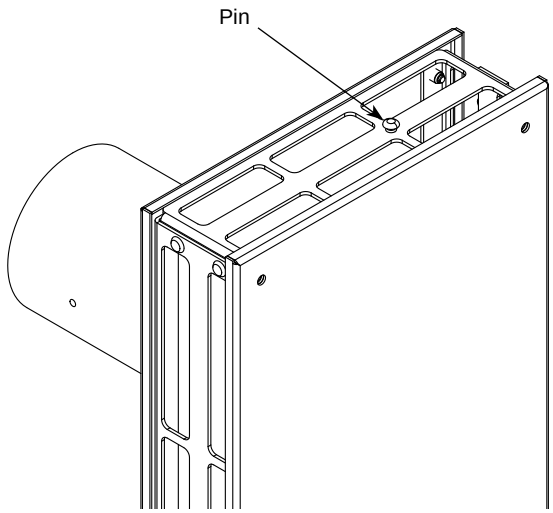

Fig 40. Filter Media Retaining Pin

12.0 RECOMMENDED SPARES

When replacing any part of this appliance, care must be taken to only use spare parts which conform fully to the safety and performance requirements of the boiler. Reconditioned or copy parts which are not approved by Hamworthy may affect safe operation.

A comprehensive range of spare parts is available, for purchase directly from Hamworthy please see hamworthy-heating.com for further information, alternatively please contact our spares team on 01482 498665 with serial number information and the team will be happy to assist.

APPENDIX A. GAS DATA

Table 2 General Data

GENERAL DATA		BOILER MODEL					
Model - Condensing		97/97		97/194		97/291	
		Nat Gas	LPG	Nat Gas	LPG	Nat Gas	LPG
Boiler Input (maximum) - kW (Gross)		109	106.7	218	213.4	327	320.1
Boiler Input (maximum) - kW (Nett)		98.2	98.2	196.4	196.4	294.6	294.6
Boiler Output (maximum) condensing	50/30 °C - kW	97.2	97.2	194.4	194.4	291.6	291.6
Boiler Output (maximum) non condensing	80/60 °C - kW	95.7	95.7	191.4	191.4	287.1	287.1
Boiler Module Input (minimum) (Nett)	80/60 °C kW	19.6					
Boiler Module Output (minimum)	80/60 °C kW	19.1					
Model - Condensing		116/116		116/232		116/348	
		Nat Gas	LPG	Nat Gas	LPG	Nat Gas	LPG
Boiler Input (maximum) - kW (Gross)		133	130.2	266	260.4	399	390.5
Boiler Input (maximum) - kW (Nett)		119.8	119.8	239.6	239.6	359.4	359.4
Boiler Output (maximum) condensing	50/30 °C - kW	116.2	116.2	232.5	232.5	348.7	348.7
Boiler Output (maximum) non condensing	80/60 °C - kW	115.2	115.2	230.4	230.4	345.6	345.6
Boiler Module Input (minimum) (Nett)	80/60 °C kW	24.0					
Boiler Module Output (minimum)	80/60 °C kW	23.5					
Model - Condensing		147/147		147/294		147/441	
		Nat Gas	LPG	Nat Gas	LPG	Nat Gas	LPG
Boiler Input (maximum) - kW (Gross)		163	159.5	326	319.1	489	478.6
Boiler Input (maximum) - kW (Nett)		146.8	146.8	293.6	293.6	440.3	440.3
Boiler Output (maximum) condensing	50/30 °C - kW	147.4	147.4	294.8	294.8	442.2	442.2
Boiler Output (maximum) non condensing	80/60 °C - kW	142.8	142.8	285.6	285.6	428.4	428.4
Boiler Module Input (minimum) (Nett)	80/60 °C kW	29.4					
Boiler Module Output (minimum)	80/60 °C - kW	28.7					
Model - Condensing		196/196		196/392		196/588	
		Nat Gas	LPG	Nat Gas	LPG	Nat Gas	LPG
Boiler Input (maximum) - kW (Gross)		219	214.4	428.7	394.4	657	643.1
Boiler Input (maximum) - kW (Nett)		197.2	197.2	394.4	394.4	591.6	591.6
Boiler Output (maximum) condensing	50/30 °C - kW	196.3	196.3	392.6	392.6	588.9	588.9
Boiler Output (maximum) non condensing	80/60 °C - kW	191.6	191.6	383.2	383.2	574.8	574.8
Boiler Module Input (minimum) (Nett)	80/60 °C kW	39.4					
Boiler Module Output (minimum)	80/60 °C - kW	38.6					
Model - Condensing		254/254		254/508		254/762	
		Nat Gas	LPG	Nat Gas	LPG	Nat Gas	LPG
Boiler Input (maximum) - kW (Gross)		275	269.2	550	538.3	825	807.5
Boiler Input (maximum) - kW (Nett)		247.6	247.6	495.3	495.3	742.9	742.9
Boiler Output (maximum) condensing	50/30 °C - kW	254.4	254.4	508.7	508.7	763.1	763.1
Boiler Output (maximum) non condensing	80/60 °C - kW	239.8	239.8	479.6	479.6	719.4	719.4
Boiler Module Input (minimum) (Nett)	80/60 °C kW	49.5					
Boiler Module Output (minimum)	80/60 °C - kW	48.4					

GAS DATA	97	116	147	196	254
Gas Inlet Connection Pipe Thread Size	R1 “		R1 1/4 “		
Nominal Inlet Pressure Nat Gas (LPG) -mbar	20 (37)				
Maximum Inlet Pressure Nat Gas (LPG) -mbar	25 (45)				
Gas Pressure Switch Setting Nat Gas -mbar	7	7	7	7.5	7.5
Gas Flow Rate (max. per module) Nat Gas -m3/h	10.4	12.7	15.5	20.9	26.2
Gas Flow Rate (max. per module) LPG -m3/h	4	4.9	6	8.1	10.1
Target CO2 % at High / Low fire Nat Gas ±0.25%	9				
Target CO2 % at High / Low fire LPG ±0.25%	10.6				
NOx emission at 0% O2 (dry) Nat Gas mg/kWh	39.8	34.3	37.7	39.9	38.8
NOx emission at 0% O2 (dry) LPG mg/kWh	42	58.1	69.3	68.6	39.9

Table 3 Data on Products < 400 kW

PRODUCT REFERENCE	BOILER MODEL					
Trade mark		ModuMax				
Models		97	116	147	196	254
Nominal power	Prated kW	97	116	147	196	254
At nominal power and in 80˚C/ 60˚C regime	P4 kW	95.7	115.2	142.8	191.6	239.8
	N4 (Gross) %	87.7	86.5	87.5	89	87.4
At 30% nominal power and in 30˚C return temperature regime	P1 kW	29.1	36	44.1	58.8	76.2
	N1 (Gross) %	96.6	94.6	96.6	95	96.8
Auxiliary electricity consumption						
Under full load	elmax kW	0.07	0.07	0.15	0.25	0.252
Under partial load	elmin kW	0.04	0.04	0.05	0.15	0.151
In standby mode	PSB kW	0.01	0.01	0.01	0.01	0.005
Other properties						
Heat Loss	Pstby kW	0.19	0.19	0.22	0.22	0.22
Nitrogen oxide emissions	Nox (Gross) mg/kWh	40	40	38	40	38

APPENDIX B. ELECTRICAL SUPPLY & CONTROLS CONNECTIONS

Wiring external to the appliance MUST be in accordance with the current I.E.T. (BS7671) Wiring Regulations and any local regulations which apply.

B1. Mains Supply Input Connection

The boiler MUST be provided with a Mains Electrical Supply. This connection is made on X20 within the appliance on the boiler controller PCB.

Table 4 Electrical Data

ELECTRICAL DATA		
Models	97/116	147/196/254
Connector	X20	
Mains Supply Voltage	230V, 50Hz	
Power Consumption	166W	240W

1. The Mains Supply cable should only be routed via the high voltage conduit.

2. Individual boiler modules must be earthed and be installed with their own isolator, which must be placed adjacent to the appliance in a readily accessible position.

3. For 3-phase Electrical supplies, the individual boiler modules MUST be supplied from the same phase.

4. For a typical Mains Supply schematic please refer to Fig 41.

B2. 230V Actuator Output Connections

The boiler can be used to drive up to 3 independent 230V actuators, such as pumps or valves, via the QX outputs. These connections are made on QX1, QX2 or QX3 within the appliance on the boiler controller PCB.

1. The 230V Actuator Output cables should only be routed via the high voltage conduit.

2. The maximum current draw of each of the 230V Actuator Outputs is 1A.

3. If any 230V Actuator Output is being used to switch a device/actuator with a current draw greater than 1A, then a relay MUST be used instead, with the supply voltage being supplied externally of the boiler.

B3. Analogue Input Connection

The boiler can be capacity or temperature controlled, via the Analogue Input. This connection is made on H1, within the appliance on the boiler controller PCB.

1. The Analogue Input cables should only be routed via the low voltage conduit.

2. The maximum voltage applied to the input MUST be 10V.

3. It is intended to be connected to an external 0-10V control signal, such as that from a BMS.

B4. SELV Digital Input Connection

The boiler can be controlled to a fixed temperature, via the Digital Input. This connection is made on H1, within the appliance on the boiler controller PCB.

1. The Digital Input cables should only be routed via the low voltage conduit.

2. This Digital Input MUST only be used with a Voltage Free Contactor, such as that from a BMS, or to Thermostat.

B5. SELV Start Prevention Connection

The boiler can be placed into Start Prevention mode, via the Start Prevention Input. This connection is made on Start Prevention Interlock, within the appliance on the Interlock Connector.

1. The Start Prevention cables should only be routed via the low voltage conduit.

2. The Start Prevention Input MUST only be used with a Voltage Free Contactor, such as that from a BMS, or to Thermostat.

B6. Temperature Sensor Connections

The boiler can be connected to external 10k NTC or 1k NTC, such as Heat Circuit Flow Temperature Sensors, Hot Water Tank Sensors OR Outside Temperature Sensors. These connections are made on BX1, BX2, BX3, B3 or B9, within the appliance on the boiler controller PCB.

1. The Temperature Sensor cables should only be routed via the low voltage conduit.

2. The BX1/BX2/BX3/B3 Temperature Sensor Inputs MUST only be used with a 10k NTC Thermistor.

3. The B9 Temperature Sensor Input MUST only be used with a 1k NTC Thermistor.

4. The maximum cable lengths for BX1/BX2/BX3/B9 are 120m and the maximum cable length for B3 is 10m.

Note. For electrical connections within the boiler please refer to Fig 8. Boiler Electrical Connections.

B7. QAA Room Unit Connections

The boiler can be connected to external QAA Room Unit Controllers (QAA55 or QAA74 Option Kits). These connections are made on X7, within the appliance on the boiler controller PCB.

1. The QAA Room Unit cables should only be routed via the low voltage conduit.

2. The X7 Connection must only be used with QAA Room Units.

3. The maximum cable lengths for the QAA Room Units are 50m.

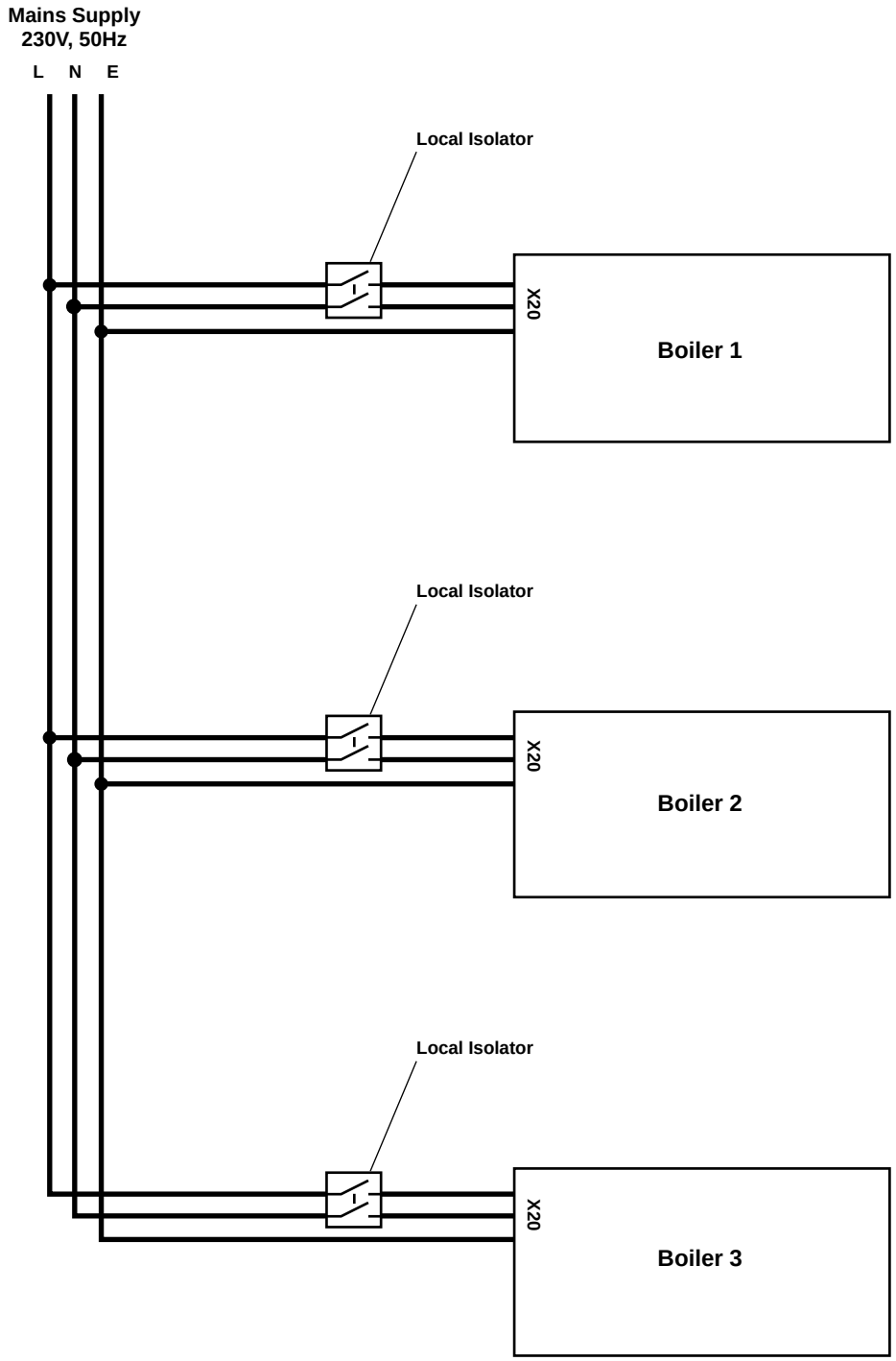

Fig 41. Typical Mains Supply Wiring

The boilers must be enabled individually with at least a 20s delay between each being enabled.

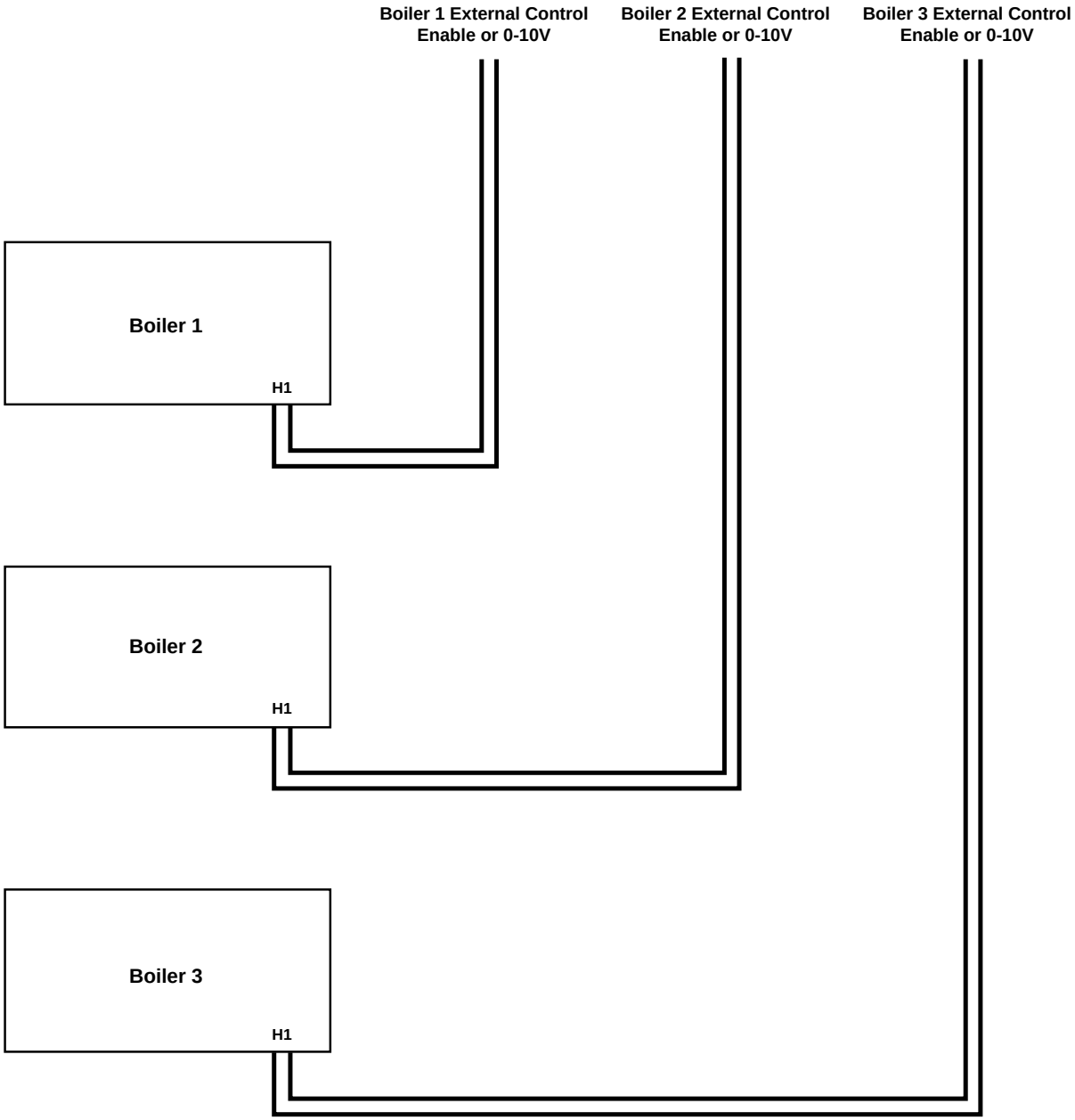

Fig 42. External Control Wiring for Multiple Module Installation

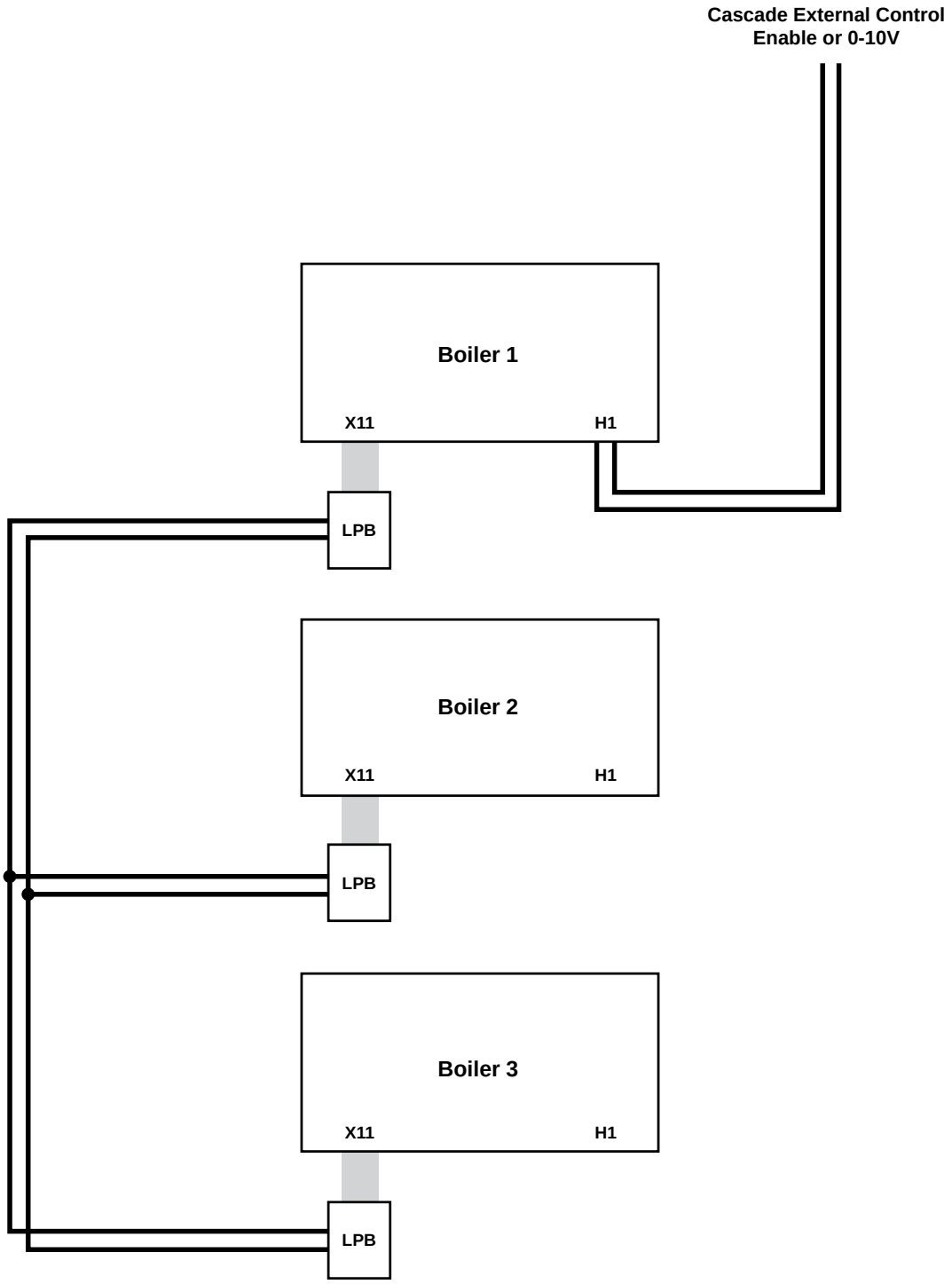

Fig 43. External Control Wiring for Multiple Module Installation Cont.

APPENDIX C. FLUE DATA

Table 5 Natural Gas & LPG

FLUE DATA - Natural Gas	97			116			147		
Model - Condensing	97	196	291c	116	232c	348c	147	291c	441c
Nominal Flue Diameter- mm	100	180	180	100	180	180	150	250	250
Maximum Flue Gas Temperature- °C	83			83			78		
Pressure at the boiler flue outlet- Pa/mbar	150 / 1.5			150 / 1.5			150 / 1.5		
Approx. Flue Gas Volume m^3/h*	143	286	429	160	320	480	214	428	642
	196			254					
Model - Condensing	196	392c	588c	254	508c	762c			
Nominal Flue Diameter- mm	150	250	250	150	250	250			
Maximum Flue Gas Temperature- °C	83			82					
Pressure at the boiler flue outlet- Pa/mbar	150 / 1.5			150 / 1.5					
Approx. Flue Gas Volume m^3/h*	279	558	837	354	708	1062			

* Note:- Flue gas volumes are corrected to a flue gas temperature of 15 °C, @ 9.1% CO2 and barometric pressure of 1013.25mbar.

C1. Flue System

1. Detailed recommendations for flue systems are given in BS 6644, and IGE/UP/10. All flue discharges for plant exceeding 150 kW output must comply with the third edition of the 1956 Clean Air Act Memorandum.

⚠ WARNING: The flue discharge from a modumax boiler will generate a plume at the terminal exit. This must be considered with regard to terminal location and adjacent building fabric.

C2. General Requirements

The Hamworthy ModuMax series of boilers are designed to be used with natural draught flues. Flue systems should be designed in accordance with regulations and with reference to BS 6644 and IGE/UP/10.

Open (Natural draught) Flue.

Type B23: Intake from ventilated plant room and discharge via horizontal/vertical flue. *See Fig 44.*

Type B23p: Flue pressurised, intake from ventilated plant room and discharge via horizontal/vertical flue. *See Fig 44.*

The connection to the boiler is suitable for 100 mm flue duct (97 & 116) & 150 mm flue duct (147/196/254), for connection to an open flue (chimney) system . The resistance of the flue system components is detailed in *Table 6 Flue Resistance.*

The following points should be noted:

a. Due to the high thermal efficiency of the boiler condensation in the flue will occur. It is strongly recommended that twin wall or insulated flue pipe is used on all installations.

b. Care should be taken to make sure that the flue is installed such that any condensation is continuously drained. All flues should have minimum slope of 2.5° upwards in the direction of the exhaust gas flow (no horizontal sections). All joints should be such that any condensation is directed back down the slope to an open drain connection in the flue. The drain pipe must be manufactured from a corrosion resistant material and be at least 15mm diameter. It must also have a fall of at least 2.5° (approx 30-50 mm per meter) and connect to a drain via a waste trap.

c. Boiler flue outlet sizes - A flue system designed with the same diameter as the boiler flue outlet may not provide satisfactory performance in all applications. Conversely a flue system designed with a smaller diameter than the boiler flue outlet may provide satisfactory performance. Consideration must be given to the correct calculation of the required flue size. If in any doubt consult Hamworthy Heating Ltd who working in partnership with Midtherm Engineering Ltd can provide a comprehensive flue design and installation package.

C3. Waste Gas Volume and Temperature.

It is recommended that the volume and temperature of the waste gases used for design of the flue system are as given in the above tables.

C4. Materials.

Materials used for the flue system must be mechanically robust, resistant to internal and external corrosion, non-combustible and durable under the conditions to which they are likely to be subjected. Consideration must be given to avoid possible freezing of condensate water traps and pipework

⚠ WARNING: The flue system must be self supporting and not present a risk to people in or around the building.

C5. Suction

The maximum number of Modules firing into a common chimney is 9. (IM11/IGEUP10 states 8 for a natural draft flue). For larger installations refer to HHL Technical.

The flue system referred to in *Table 6* must be designed acknowledging that there is a positive pressure generated by the boiler combustion fan. It is recommended that a draught stabiliser is fitted to the flue system where the

suction is likely to be negative at the boiler connection. Any stabiliser fitted must be in or close to the vertical chimney.

The flue system must be designed to limit the maximum suction (cold) to 30 Pa negative, measured at the connection to the boiler. Should the suction be greater than 30 Pa, refer to HHL technical.

This condition must then be checked Hot and with all boilers firing, the maximum pressure condition at the connection to the boiler is 150 Pa positive.

In the event that the flue system when Hot does generate a suction, the maximum suction is 100 Pa.

Fan Dilution - The design must provide for the use of balancing and trim dampers, and their location and operation must be such that the constraints detailed above can be met. Care must be taken to make sure that the fan performance is matched to deliver the appropriate dilution, whilst ensuring that excessive suction is not applied to the boilers. If in doubt, refer to HHL Technical.

C6. Disconnection

Provisions should be made for disconnection of the flue pipe for servicing. It is advisable that bends are fitted with removable covers for inspection and cleaning as appropriate.

C7. Flue Discharge

The flue system must make sure safe and efficient operation of the boiler to which it is attached, protect the combustion process from wind effects and disperse the products of combustion to the external air. The flue must terminate in a freely exposed position and be so situated as to prevent the products of combustion entering any opening in a building. Where the flue diameter is less than 204 mm (8“) diameter a terminal must be fitted. Where the flue is of a larger size, consideration should be given to the fitting of a flue discharge terminal or grille to stop ingress of birds etc.

C8. Surface Temperatures

Combustible materials in the vicinity of the boiler and flue shall not exceed 65 °C during boiler operation. The flue shall not be closer than 50 mm to any combustible material, except where it passes through such material with a non-combustible sleeve when the air gap may not be less than 25 mm.

C9. Location

The flue system must not be placed or fitted where there is undue risk of accidental damage to the flue pipe or undue danger to persons in the vicinity. Check that the flue and chimney are clear from any obstruction. ModuMax boilers are suitable for installation in a balanced compartment in accordance with the requirements of BS 6644. Consult Hamworthy Heating Technical Department for help or assistance if in doubt.

C10. Condensate Discharge

Due to the high thermal efficiency of the boiler, condensation will occur within the boiler casing during firing from cold conditions. A drain with an integral trap is fitted to the rear of each module suitable for connection to a 32 mm plastic waste pipe (not Hamworthy Heating Ltd supply), which must be connected to a tundish (not Hamworthy Heating Ltd supply). Discharge piping from a tundish should be of synthetic material due to the mild acidity of the condensate (pH3-5), with all discharge piping having a minimum fall of 30 mm/m away from the boiler. Consideration should be given to possible freezing of condensate water traps and pipework. This must be avoided at all times by routing pipework within the building, where possible. In addition to the above the stacked module arrangement flue boxes are supplied with a trap terminating in a 32 mm i.d. connection, which should be connected in a similar manner to a drain.

Table 6 Flue Resistance

Model	Flue Dia. (mm)	Max Flue Length (m)	Equivalent Length (m) 90°	Equivalent Length (m) 45°
97/97	100	15	1.5	1.2
116/116				
147/147	150	43	2.4	1.8
196/196		28		
254/254		22		
97/194c	180	101	2.8	2.1
97/291c		41		
116/232c	180	85	2.9	2.2
116/348c		35		
147/294c	250	163	4.4	3.4
147/441c		69		
196/392c		94		
196/588c		36		
254/508c	250	110	4.6	3.5
254/762c		44		

Connection of 100 mm dia. Ducts — Open Flue Systems

Refer to *Fig 44.* Fit the flue components on route to the terminal discharge taking care not to damage the flue seal when assembling the flue components, and ensuring a minimum 2° slope and that the flue system is self supporting using wall brackets where necessary. In terminating the flue system, make sure that the joint through the wall / roof is made good and weatherproofed.

ⓘ IMPORTANT: In fitting the HHL supplied 100 mm dia. Ducts to a stainless steel flue system, the flue system must have it’s own condensate drain. The system must not be allowed to drain back through the HHL supplied components.

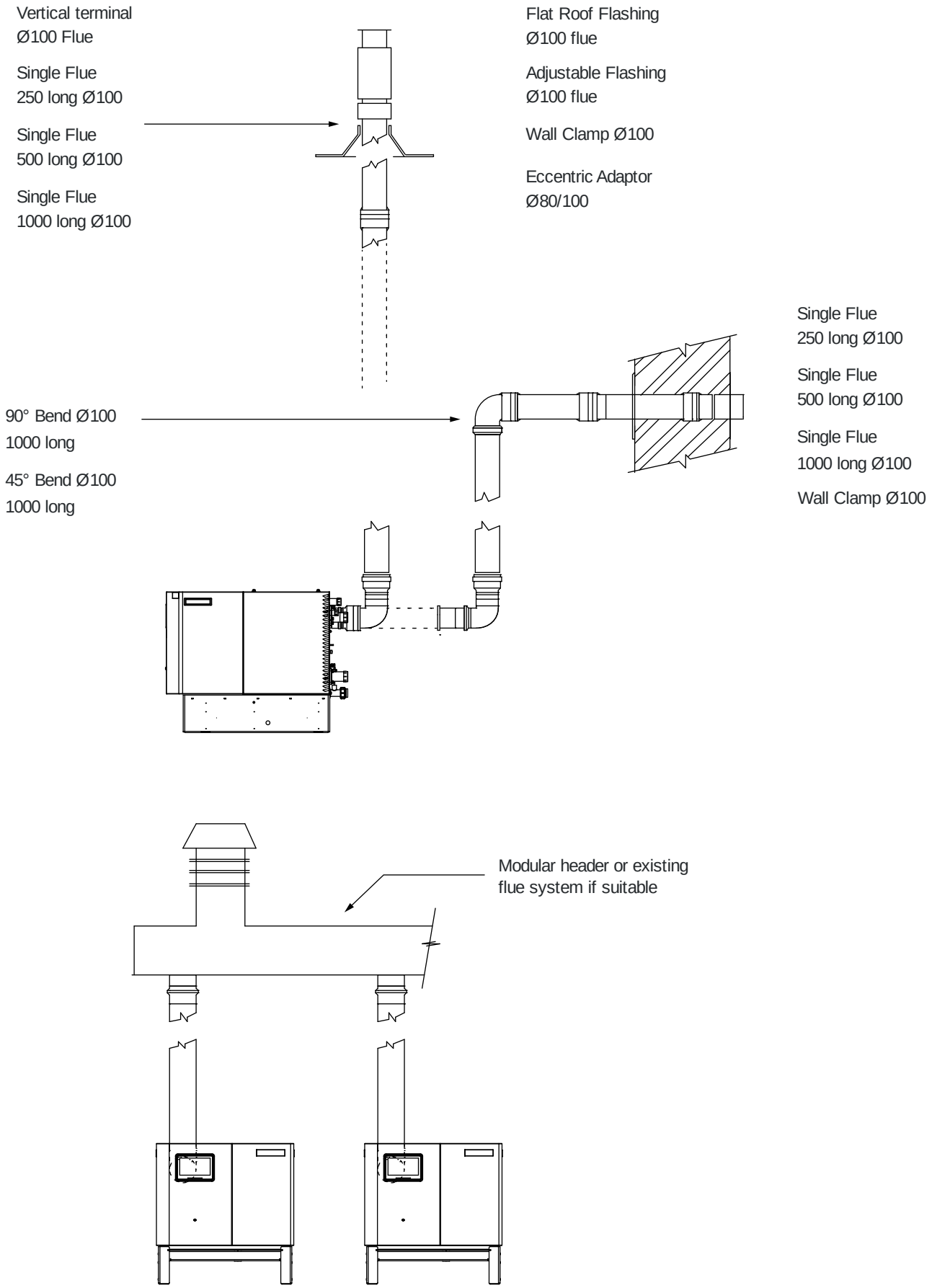

Fig 44. Open Natural Draught (B23/B23p) Flue System - applies to 97 & 116 Single Boilers Only
Open Natural Draught (B23/B23p) Flue System (Multiple Boiler Installations)

APPENDIX D. VENTILATION

D1. Air Supply

Detailed recommendations for air supply are given in BS 6644 and BS5440 Pt 2. The following notes are intended to give general guidance. In all cases there must be provision for an adequate supply of air for both combustion and general ventilation, in addition to that required for any other appliance.

Note. For Open flue applications, combustion air for the boiler is drawn through the top of the boiler casing. The air inlets must be kept open and free from blockage at all times.

ⓘ IMPORTANT: LPG - installations. It is strongly recommended that gas detection equipment is fitted. This equipment should be positioned near the boiler(s) and at low level. The space housing the boiler(s) must be ventilated at high and low level in accordance with the following;

D2. Air Supply by Natural Ventilation - Open Flue applications

The boiler room must have, or be provided with, permanent air vents directly to the outside air, at high level and at low level. For an exposed boiler house, air vents should be fitted, preferably on all four sides, but at the least on two sides. Air vents should have negligible resistance and must not be sited in any position where they are likely to be easily blocked or flooded or in any position adjacent to an extraction system which is carrying flammable vapour. Grilles or louvres must be so designed that high velocity air streams do not occur within the space housing the boiler.

Boiler house ventilation

- Low level (inlet) - 4cm² per kW of total rated input (Net)
- High level (output) - 2cm² per kW of total rated input (Net)

Compartment ventilation

Where the boiler is to be installed in a cupboard or compartment, permanent high and low level ventilation is required which must communicate direct to outside, for cooling purposes.

- Low level (inlet) - 10cm² per kW of total rated input (Net)
- High level (output) - 5cm² per kW of total rated input (Net)

D3. Air Supply by Natural Ventilation - Room Sealed Installations

Where the boiler(s) are to be installed in a boiler room or internal space, the room or internal space must have permanent air vents directly to the outside air, at high level and at low level with the general requirements detailed above on location and construction.

Boiler house ventilation

- Low level (inlet) - 2cm² per kW of total rated input (Net)
- High level (output) - 2cm² per kW of total rated input (Net)

Compartment ventilation

Where the boiler is to be installed in a cupboard or compartment, permanent high and low level ventilation is required which may communicate to an adjoining room or outside, for cooling purposes.

- Ventilation to a room or internal space - 10 cm² per kW of total rated input (Net)
- Ventilation direct to outside - 5cm² per kW of total rated input (Net)

D4. Air Supply by Mechanical Ventilation

Air supplied to the boiler room by Mechanical means should be as follows:

- Mechanical ventilation must be interlocked with the boilers to prevent operation in the event of ventilation fan failure
- Mechanical extract ventilation with natural inlet ventilation MUST NOT be used.

For Mechanical ventilation systems an automatic control should be provided to cut off the gas supply to the boiler, in the event of failure of air flow in either inlet or extract fans.

D5. Boiler House Temperatures

The air supplied for boiler house ventilation shall be such that the maximum temperatures within the boiler house shall be as follows:

- At floor level (or 100mm above floor level) = 25 °C.
- At mid-level (1.5m above floor level) = 32 °C.
- At ceiling level (or 100mm below ceiling level) = 40 °C.

D6. General Requirements

The air supply should be free from contamination such as building dust and insulation fibres from lagging. To avoid unnecessary cleaning and servicing of the boiler modules, the boilers should not be fired whilst building work is being undertaken.

High and low level ventilation grilles shall be positioned as high and as low as practicably possible. Low level grilles should be located within 1 metre of the floor for Natural Gas and within 250 mm of the floor for LPG. High level grilles should be positioned within 15% of the boiler room height from the ceiling. High and low level grilles shall communicate with the same room or space where compartment ventilation is used. Where grilles communicate directly with outside air, they shall be positioned on the same wall.

Table 7 Mechanical Ventilation Flow Rates

	Flow rate per kW total rated heat input (net)	
Boilers without draught diverters	**Inlet air (combustion ventilation)**	**Difference between inlet and extract air (inlet minus extract ventilation)**
	m³/h	m³/h
	2.6	1.35 +/- 0.18

Note. Where the associated air extraction is also by means of a fan, this shall be selected such as not to cause a negative pressure to develop in the boiler house and to maintain the difference between inlet and extract flow rates shown above.*

The calculated extract flow rate is the actual inlet flow rate minus the appropriate Figure in Table 7 Mechanical Ventilation Flow Rates.

APPENDIX E. WATER DATA

Table 8 Water Data

MODEL	97 /97	116/116	147/147	196/196	254/254
Water Connections (Flow & Return)	G 1½ " male		G 2½ " male		
Maximum Water Pressure - bar g - (kPa)	10 (1000)				
Water Content (litres) -excluding headers	16	16	22	22	22
System Design Flow Rate (litres/s) @ 11 °C ΔT Rise	2.2	2.6	3.3	4.3	5.4
System Design Flow Rate (litres/s) @ 20 °C ΔT Rise	1.2	1.4	1.8	2.4	3
System Design Flow Rate (litres/s) @ 30 °C ΔT Rise	0.8	1	1.2	1.6	2
System Design Flow Rate (litres/s) @ 40 °C ΔT Rise	0.6	0.7	0.9	1.2	1.5
Waterside Pressure Loss (mbar) @ 11 °C ΔT Rise	61	91	500	850	1300
Waterside Pressure Loss (mbar) @ 20 °C ΔT Rise	20	27	145	246	395
Waterside Pressure Loss (mbar) @ 30 °C ΔT Rise	9	14	60	120	180
Waterside Pressure Loss (mbar) @ 40 °C ΔT Rise	5	7	36	62	100
Minimum flow temperature setting	30 °C @ 11 °C ΔT				
	30 °C @ 20 °C ΔT				
	40 °C @ 30 °C ΔT				
	50 °C @ 40 °C ΔT				

The ModuMax boiler has a low water content and the requirements of minimum water flow are given in the above table. Recommendations for the water circulation system are given in BS 6644 and CP 342.

The following details are of particular importance for the correct installation of the water circulation system:

1) In a combined central heating and hot water system the hot water storage vessel must be of the indirect cylinder or calorifier type. The hot water storage vessel should be insulated, preferably with not less than 75 mm (3") thick mineral fibre, or its thermal equivalent.

2) Circulating pipework not forming part of the useful heating surface should be insulated to help prevent heat loss and possible freezing, particularly where pipes are run through roof spaces and ventilated cavities. Cisterns situated in areas which may be exposed to freezing conditions should also be insulated. Furthermore, insulation exposed to the weather should be rendered waterproof.

3) Drain valves must be located in accessible positions which permit the draining of the whole system, including the boiler and hot water storage vessel.

4) Each boiler module has G1½ or G2½ (refer to Table 8 Water Data) male flow (indicated with a red spot) and return (indicated with a blue spot) connections. Boilers should be connected by flow and return headers. Headers should be connected to the system in a 'reverse / return' arrangement (the water flow in each header is in the same direction) to make sure equal flow in each module, or with a 'single pipe header system'. *v* show typical layouts.

5) Ideally, individual valves should be fitted to each module to enable isolation from the system, however, the arrangement must comply with the requirements of BS 6644.

Vented Sytem: Primary loop, Hamworthy recommended system.

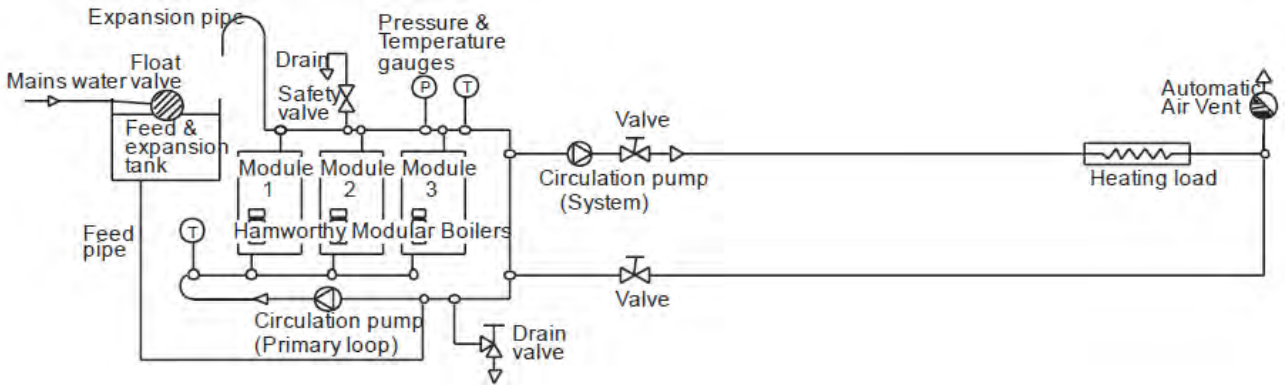

Unvented system: Primary loop, Hamworthy recommended system.

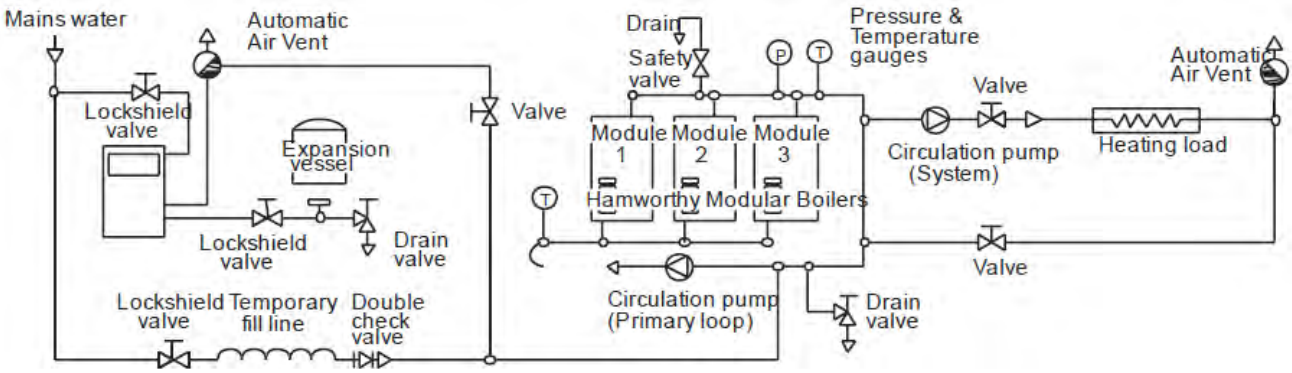

Fig 45. Typical Piping Layouts

E1. Minimum System Water Pressure

To comply with guidance note INDG436 (Health and Safety Executive), the minimum pressure requirements at the boiler are given below :-

Individual boiler @ 82 °C ..... 0.5 bar

Multiple boilers
With flow isolation (pump or valve) @ 82 °C ..... 0.5 bar

Without flow isolation @ 11 °C rise across the system @ 82 °C ..... 0.5 bar

Without flow isolation @ 20 °C rise across the system @ 82 °C ..... 1.0 bar

Without flow isolation @ 30 °C rise across the system @ 82 °C ..... 1.7 bar

Without flow isolation @ 40 °C rise across the system @ 82 °C ..... 2.6 bar

Please note that the maximum flow temperature available from the controls is 90 °C

E2. Pressure Relief Valve (Safety Valve)

The most important single safety device fitted to a boiler is its safety valve. Each boiler module is provided with a capped R¾“ stub pipe for the fitting of a safety valve (not supplied). BS 6644 provides comprehensive information for the selection and location of safety valves and attention is drawn to the higher capacity requirements of safety valves for pressurised hot water systems.

Table 9 Cold Feed and Vent Pipe Sizes

Boiler Output	Feed mm	Vent mm
60 - 150 kW	25	32
150 - 300 kW	32	38
300 - 600 kW	38	50
>601 kW	50	65

E3. Open Vent and Cold Feed Pipe.

Every boiler or group of boilers should have an open vent pipe and cold feed pipe installed between the boiler and the first water isolating valve. The minimum bore (mm) of these pipes per installation is shown in the table. The vent pipe must rise continually, any valve fitted between a boiler and the open vent pipe for maintenance purposes shall be of the 3 way type such that when closed to the vent pipe the boiler will be open to atmosphere. The vent pipe shall be protected against freezing where this might occur. See BS 6644 for detailed information on Open Vent and Cold Feed Pipes.

E4. Altitude Gauge (Water Pressure Gauge)

Every boiler or group of boilers should be provided with an altitude gauge complete with isolating valve. See Fig 45 for typical position.

E5. Thermometer

A thermometer complete with pocket should be fitted in the pipework to indicate water flow temperature. See Fig 45 for typical position.

E6. Drain Valves

Each boiler should have a 15 mm NB drain valve (not Hamworthy Heating Ltd supply) fitted in the boiler return to drain the boiler only. The heating system in total should have drain valves as recommended by BS 6644. See Fig 45 for typical position.

E7. Circulating Pump

One or more circulating pumps will be required to circulate water around the boilers and heating system. The pump should be sited to facilitate servicing. It is important that when ModuMax boilers are used to replace boilers on an existing system, the pumps should be checked for performance against the new boiler waterside pressure loss to make sure that the minimum flow rate can be obtained. Pipe kits complete with matched pumps are available from Hamworthy Heating. It is also important that the existing system be flushed through twice to remove any loose matter which may have accumulated. If in any doubt regarding the cleanliness of the system, a coarse filter should be fitted in the return pipework to the boilers.

If boilers are run off time clock control a pump overrun (not Hamworthy Heating Ltd supply) should be fitted which must run for a minimum of 5 minutes on shutdown of the last boiler. This must be interlocked to the LMS for frost protection.

E8. Minimum Water Flow Rates

Minimum water flow rates are shown in table at beginning of Appendix E. These flow rates should be maintained through the boiler at all times whilst the boiler is firing. If the water flow rate is allowed to fall below the minimum the boiler heat exchanger could fail due to the resultant scale formation. Particular attention should be paid to the restriction of external flow circuits during periods of low heat demand.

E9. Waterside Pressure Drop

The waterside hydraulic resistance (Pressure drop) is given in *Table 8 Water Data*.

E10. Water Flow Controls

Any external mixing valve / shunt pump or similar controls MUST always make sure that the minimum water flow rate as given in *"Water Data"* is maintained. If there is any doubt relating to site flow conditions it is suggested that a flow switch is fitted. The flow switch should be connected such that the boiler will shut down if insufficient flow occurs.

E11. Frost Protection

Consideration should be given to fitting a frost thermostat set at approximately 4 °C.

E12. Unvented Systems

Refer to *Fig 45* for typical layout of an unvented (Pressurised) Hot Water System. For system design refer to BS 7074 Part 2. In order to correctly size a pressurisation unit for any heating system the following parameters are required.

- Static height of highest component in system (metres)
- System volume. If this is not known, a general rule of thumb of 10litres/kW of installed boiler power can be used.
- Maximum flow temperature (°C)
- Maximum system hot working pressure, generally given in bar gauge.

From the parameters given, Hamworthy Heating can size the pressurisation unit and also the expansion vessel required.

Care must be taken in sizing expansion vessels to make sure maximum acceptance factors are not exceeded. Normally manufacturers of vessels impose a limit of 0.5. This value must not be exceeded at any time during the operation of the boiler, this includes the over pressure condition should a safety valve lift.

Consideration should also be given to sizing of the safety valve(s) in the system. Refer to BS 6759: Part 1 for further information and to BS 6880: Part 1 for design considerations.

E13. Hydraulic Diagram, Electrical Schematics & Parameter Settings for Single Boiler Installations

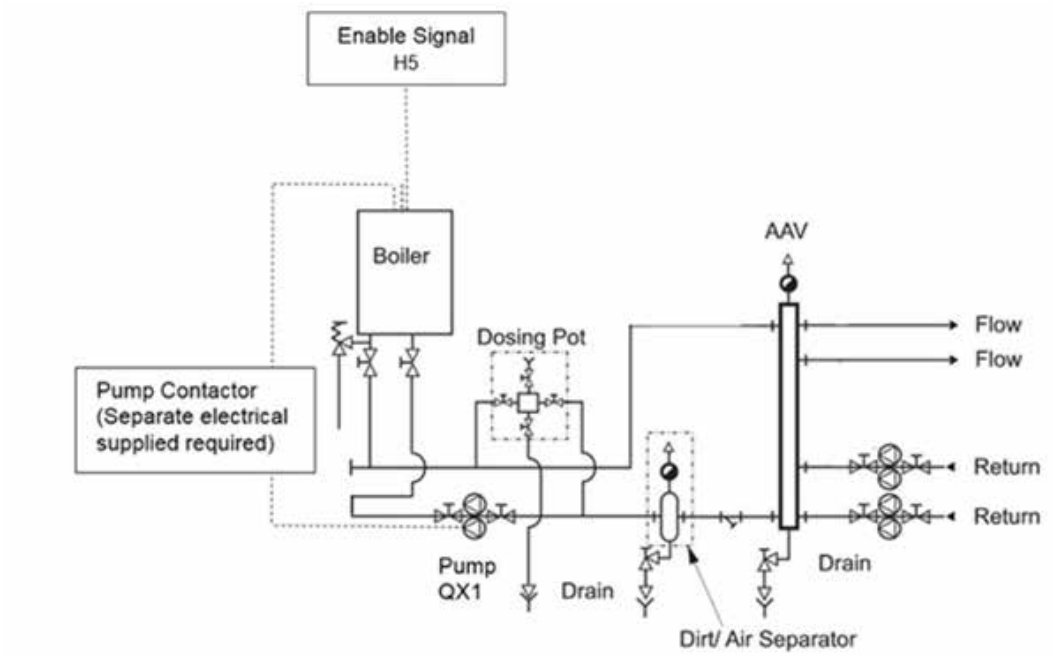

Parameter Settings

Parameter	Number	Page	Setting
Function Input H1	5950	Configuration	Temperature Request Enable
QX1 Output	5890		Boiler Pump Q1
QX2 Output	5891		None
QX3 Output	5892		None
Flow Temperature Setpoint	1859	Consumer Circuit 1	As required (Default = 80°C)

Fig 46. Single Boiler Controlled by External Enable Signal to Fixed Flow Temperature

Note. Single boiler can also be controlled using a 0-10V Signal on H1, to a user selected Capacity or Temperature. See HMI Manual for further information on the settings required for this mode of operation.

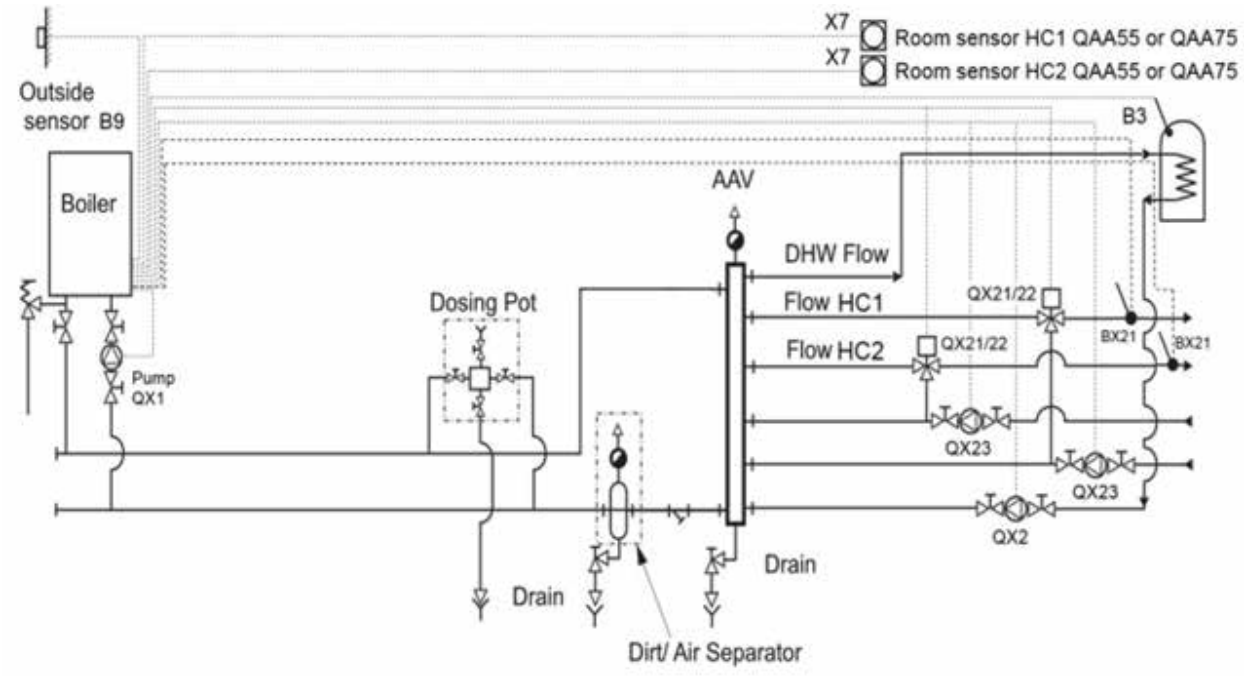

Parameter Settings

Parameter	Number	Page	Setting
Heating Circuit 1	5710	Configuration	On
Heating Circuit 2	5715		On
Function Input H1	5950		None
QX1 Output	5890		Boiler Pump Q1
QX2 Output	5891		DHW Control Element Q3
QX3 Output	5892		None
Function Extension Module 1	6021		Heating Circuit 1
Function Extension Module 2	6022		Heating Circuit 2
Operating Mode	700	Heating Circuit 1	Comfort
Room Temperature Setpoint	710		As required (Default = 20°C)
Flow Temperature Setpoint	742		As required (Default = 70°C)
Operating Mode	1000	Heating Circuit 2	Comfort
Room Temperature Setpoint	1010		As required (Default = 20°C)
Flow Temperature Setpoint	1042		As required (Default = 70°C)
Operating Mode DHW	1600	DHW	As required (Default = 70°C)
DHW Temperature Setpoint	1610		As required (Default = 55°C)

Fig 47. Single Boiler with 2x Heat Circuits Controlled by QAA, & DHW Controlled by Tank Sensor

Note. Additional Option Kits are required for this setup. These include 2x Additional Heat Circuit Extension Modules, 2x QAA55 Room Units, 1x Outside Sensor and 1x Hot Water Tank Sensor.

E14. Hydraulic Diagram, Electrical Schematics & Parameter Settings for Cascade Boiler Installation

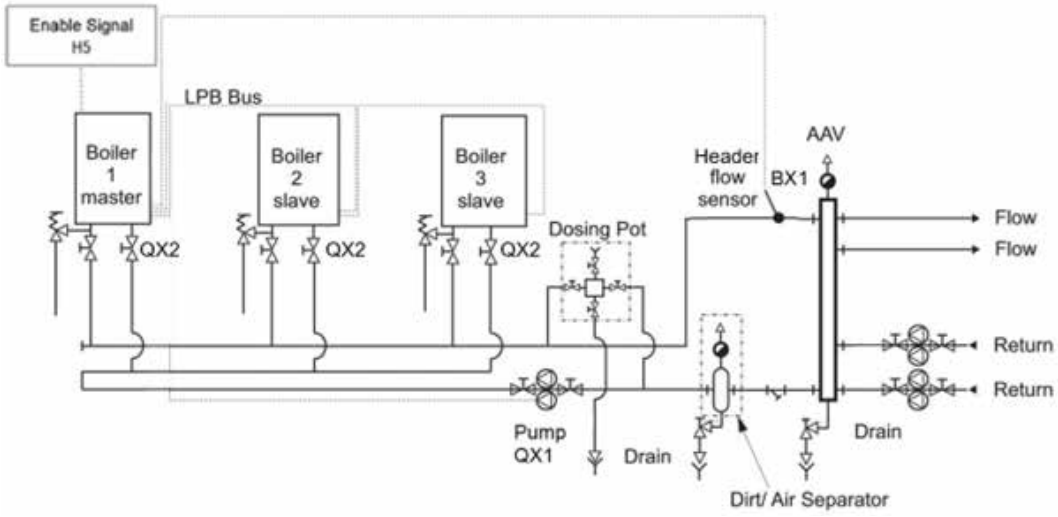

Parameter Settings Boiler 1

Parameter	Number	Page	Setting
Function Input H1	5950	Configuration	Temperature Request Enable
QX1 Output	5890		Cascade Boiler Pump Q25
QX2 Output	5891		Boiler Pump Q1
QX3 Output	5892		None
BX1 Input	5930		Common Flow Sensor B10
Boiler Address	6600	LPB	1
Flow Temperature Setpoint	1859	Consumer Circuit 1	As required (Default = 80°C)

Parameter Settings Boiler 2

Parameter	Number	Page	Setting
Function Input H1	5950	Configuration	Temperature Request Enable
QX1 Output	5890		Cascade Boiler Pump Q25
QX2 Output	5891		Boiler Pump Q1
QX3 Output	5892		None
Boiler Address	6600	LPB	2
Flow Temperature Setpoint	1859	Consumer Circuit 1	As required (Default = 80°C)

Parameter Settings Boiler 3

Parameter	Number	Page	Setting
Function Input H1	5950	Configuration	Temperature Request Enable
QX1 Output	5890		Cascade Boiler Pump Q25
QX2 Output	5891		Boiler Pump Q1
QX3 Output	5892		None
Boiler Address	6600	LPB	3
Flow Temperature Setpoint	1859	Consumer Circuit 1	As required (Default = 80°C)

Fig 48. Multiple Boilers Controlled by External Enable Signal to Fixed Flow Temperature

Note. Additional Option Kits are required for this setup. These include 2x Additional Heat Circuit Extension Modules, 2x QAA55 Room Units, 1x Outside Sensor and 1x Hot Water Tank Sensor.

E15. Hydraulic Schemes

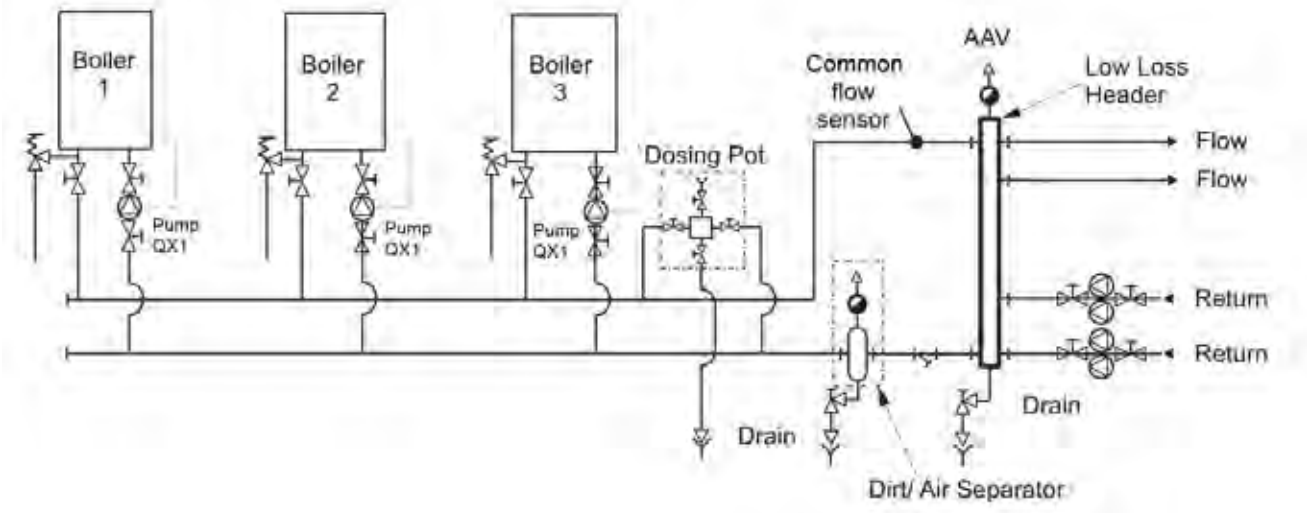

Fig 49. Primary Circuit With Individual Boiler Shunt Pumps

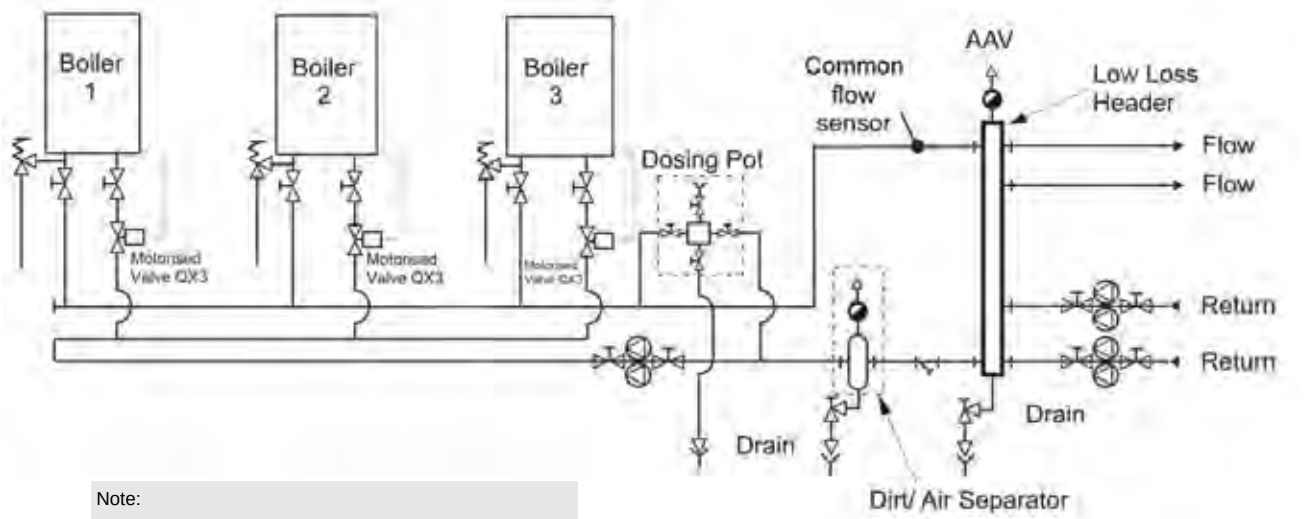

Note:

Motorised valves can be either power open/power close or power open/spring return close.

Fig 50. Reverse Return Primary Circuit with Individual Motorised Boiler Isolation

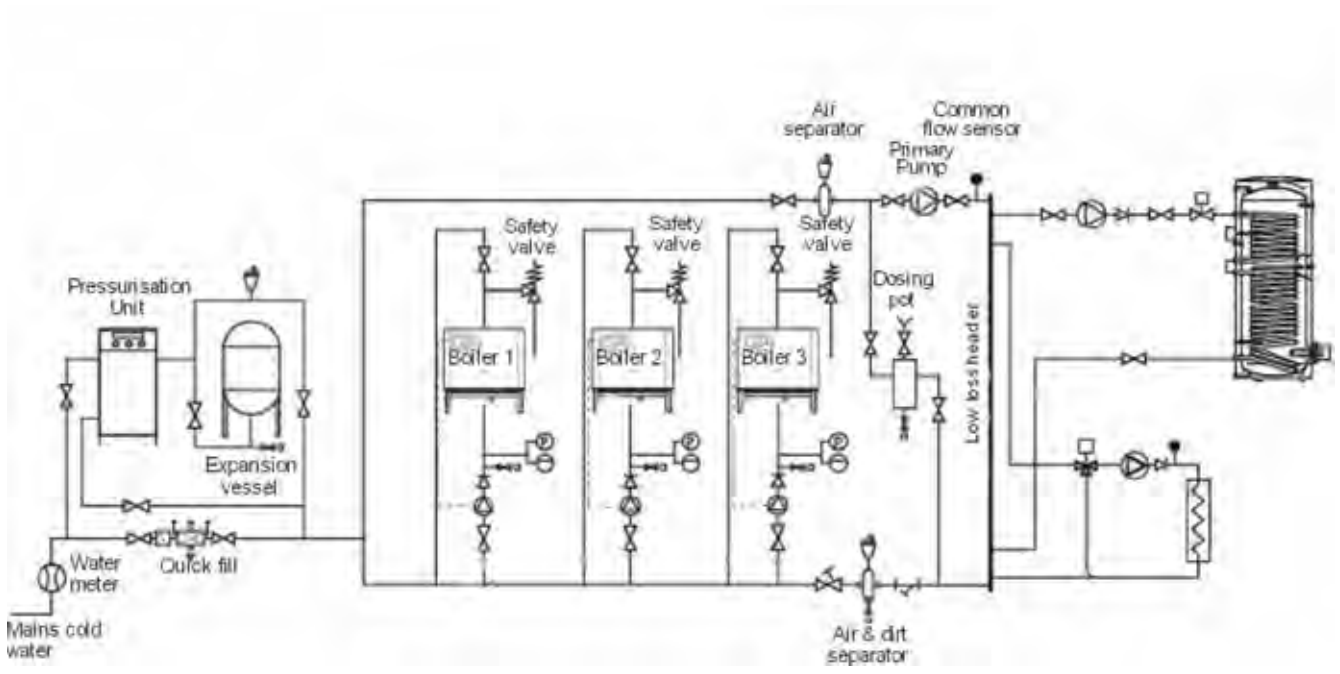

Fig 51. Single Pipe Primary Circuit

NOTES

Useful User Information				
Installer		Site Address		
Boiler Type	Boiler Size(s)	Unit No(s)	Serial No.(s)	Flue

Hamworthy Heating Accredited Agents

Southern Ireland (Sales & Service)
HEVAC Limited, Naas Road, Dublin 12 Ireland
T: 00 353 141 91919
E: info@hevac.ie

Scotland (Sales & Service)
McDowall Modular Services
2 Penson Road, Queenslie Industrial Estate, Glasgow, G33 4AG
T: 0141 336 8795
E: MMS@hamworthy-heating.com

Hamworthy Heating Customer Service Centre

Sales
T: 01202 662552 | E: sales@hamworthy-heating.com

Technical Enquiries
T: 01202 662552 | E: technical@hamworthy-heating.com

Servicing
T: 03330 040395 | E: service@hamworthy-heating.com

Spares
T: 01482 498665 | E: spares@hamworthy-heating.com

Hamworthy

Hamworthy Heating
PO Box 103
National Avenue
Kingston Upon Hull
HU5 4JN

hamworthy-heating.com

Hamworthy reserves the right to make changes and improvements which may necessitate alteration to the specificaiton without prior notice.