THUMA

Let’s get together.

Classic Sofa

www.thuma.co

Take care during assembly. Do not dispose of any packaging or contents of the shipping carton until assembly is complete. Avoid balancing unsupported pieces and do not bend over near unsecured pieces. Keep children out of the way during assembly. Only use the cushions provided. Assemble in the recommended configuration only.

Pieces

Back Rail x1

Labeled in black

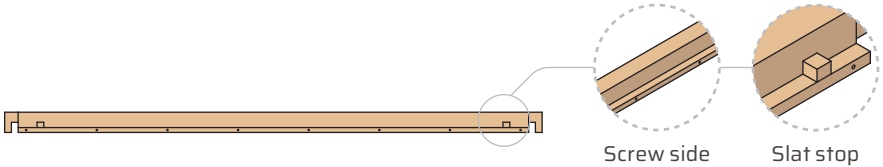

Front Rail x1

Labeled in white

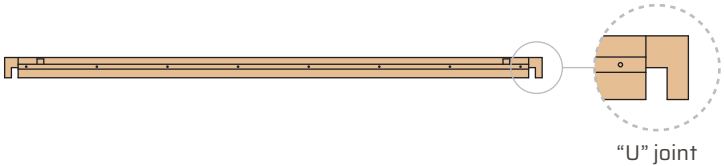

Top Rail x1

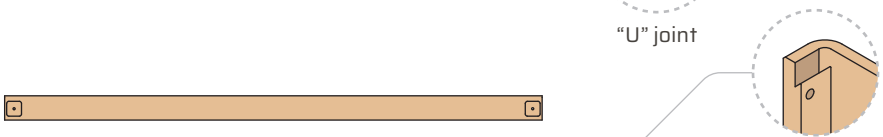

Left Side Frame x1

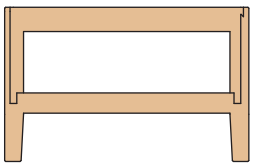

Right Side Frame x1

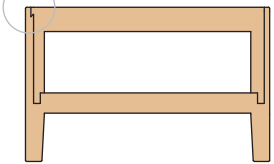

Slats x1

Short Screw x2

Pieces

Arm Cushion x2

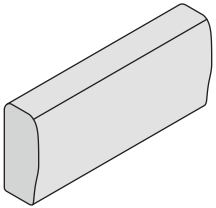

Back Cushion x2

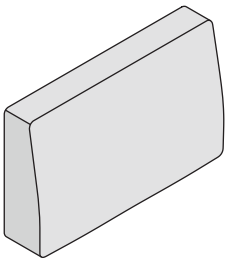

Seat Cushion x2

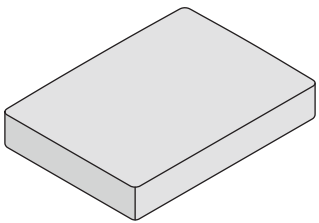

Front Rail & Back Rail

Back Rail

Labeled in black

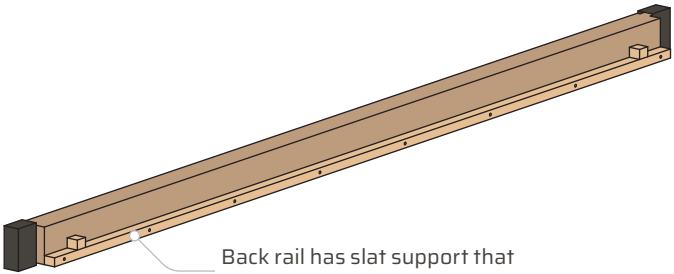

Front Rail

Labeled in white

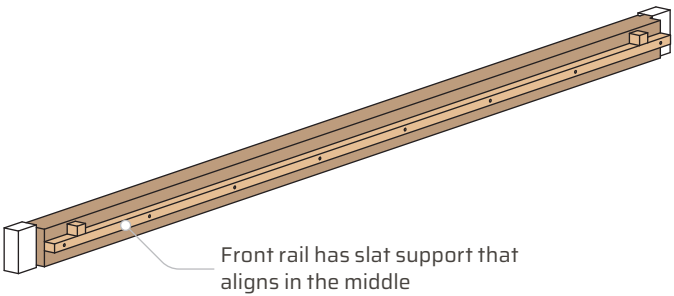

Step 1

Lay out pieces at desired location.

Arrange **side frames** with the notch close to the back side. Arrange **rails** with “U” joints facing inward, screw side facing up. Step into the center of the frame.

Keep **slats** on the sideline for now.

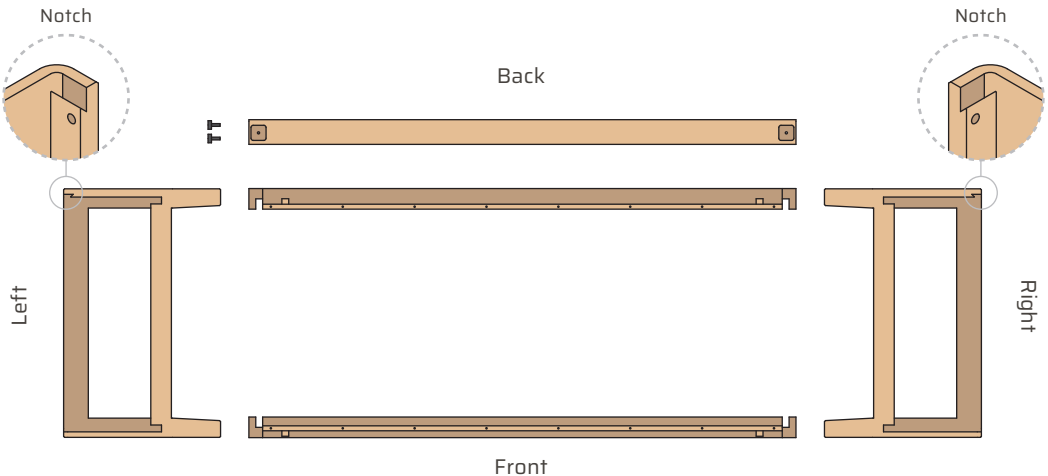

Step 2

Begin with the **left side frame** and **back rail** (labeled in black) to start assembly.

Left Side Frame

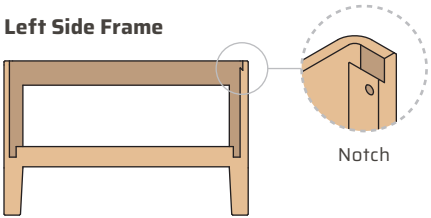

Right Side Frame (Set aside for now)

Back Rail

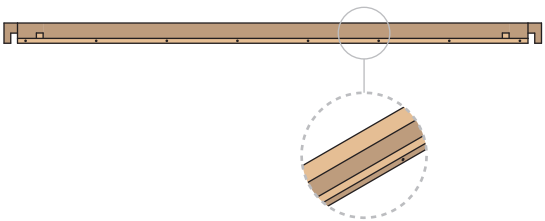

Front Rail (Set aside for now)

Step 3

Stand up the left side frame. Position the back rail with “U” joints facing down and screw side facing inward. While holding the left side frame slightly tilted inward, insert the back rail into the back end of the left side frame. Press down firmly to attach.

Hold pieces in place while moving on to the next step.

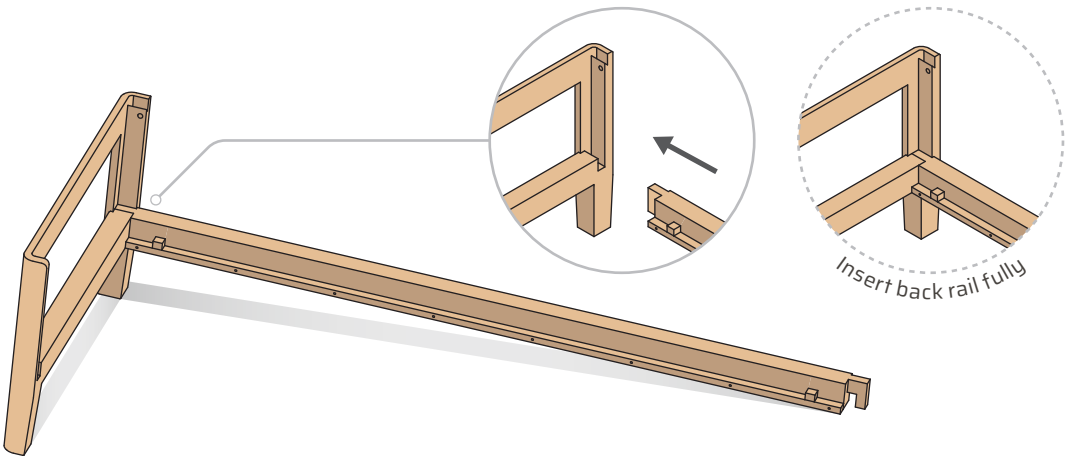

Step 4

Insert the back rail into the back end of the **right side frame**. Press down firmly to attach.

Hold pieces in place while moving on to the next step.

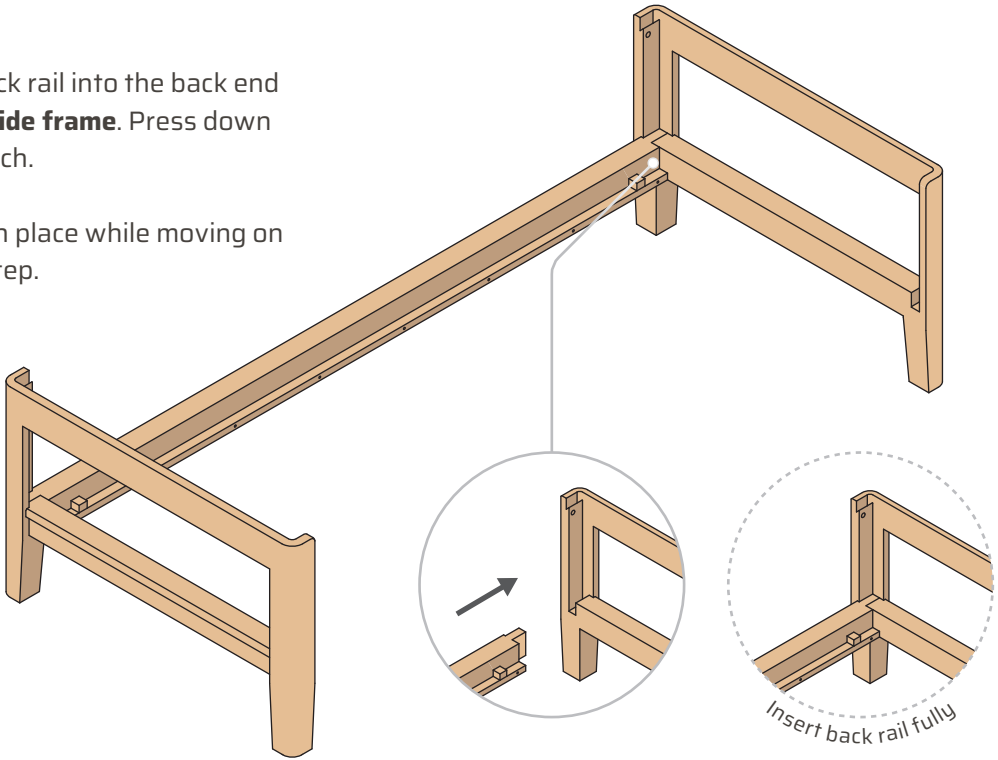

Step 5

Position the **front rail** with “U” joints facing down and screw side facing inward.

Place the front rail into the front end of each side frame. Press down firmly to attach.

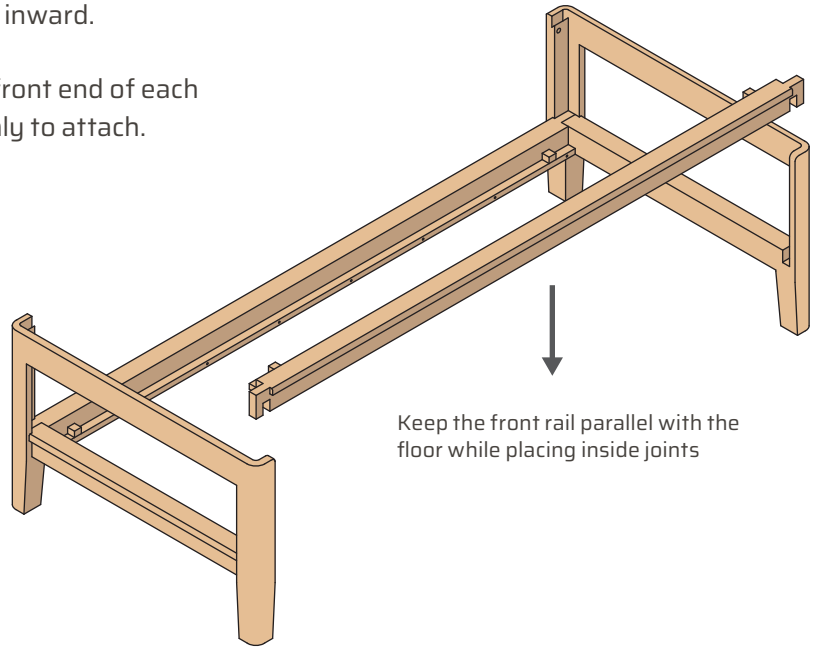

Step 6

Position the **top rail** with notches facing the back.

Place it between the back end of side frames. Align notches.

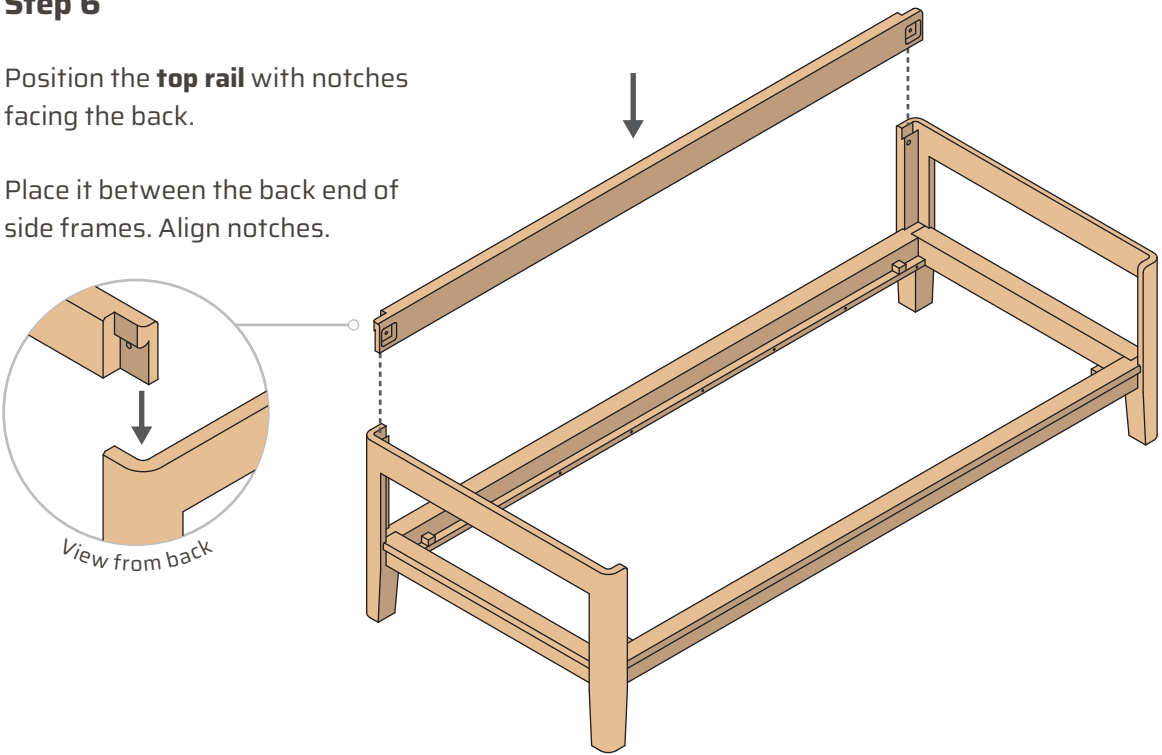

Step 7

Secure the top rail with two **short screws**.
Tighten by hand.

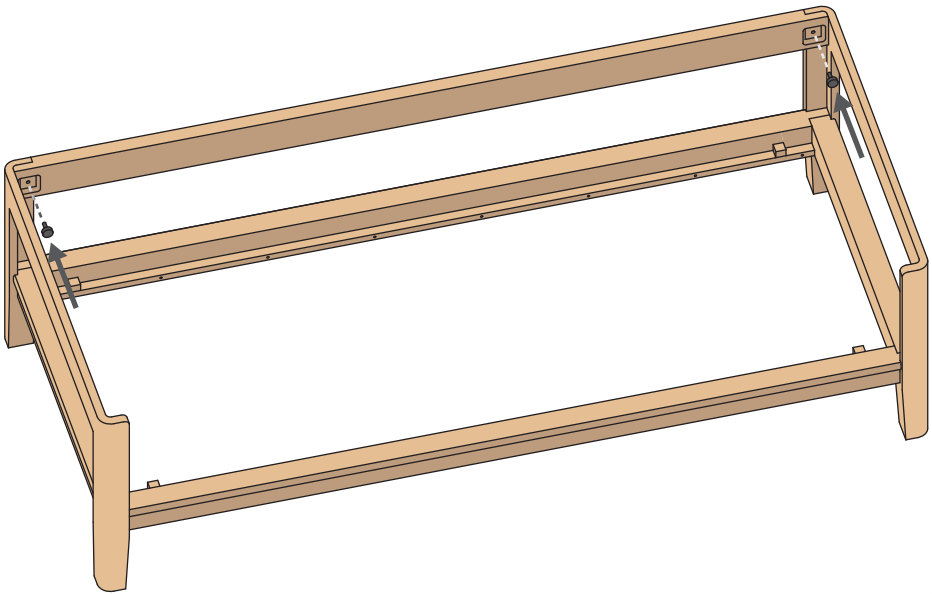

Step 8

A. Lay rolled **slats** at one end of the sofa. Place the first slat between the side frame and slat stops to hold in place.

B. Roll down to the other end of the sofa and place the last slat between the side frame and slat stops.

Slats should be tight and secure.

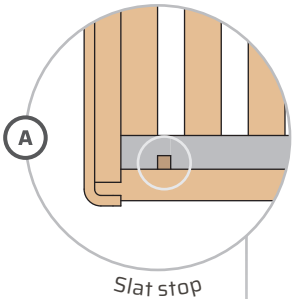

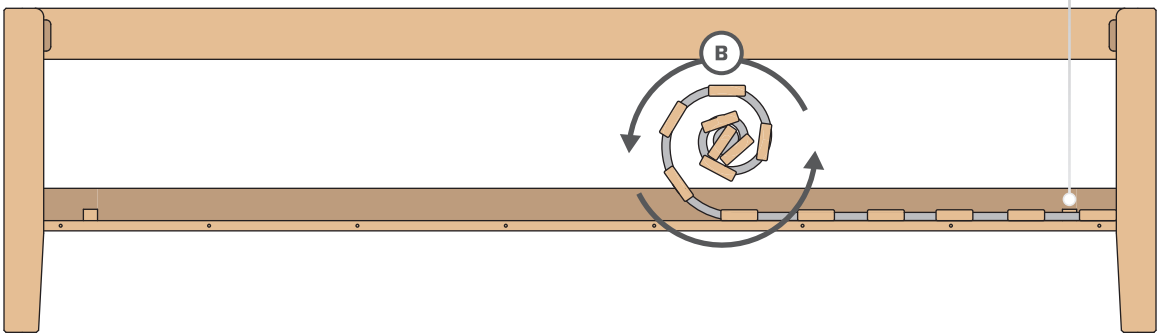

Step 9

Place the **arm cushions** in each side frame. Press to make sure cushions are securely nested into frame.

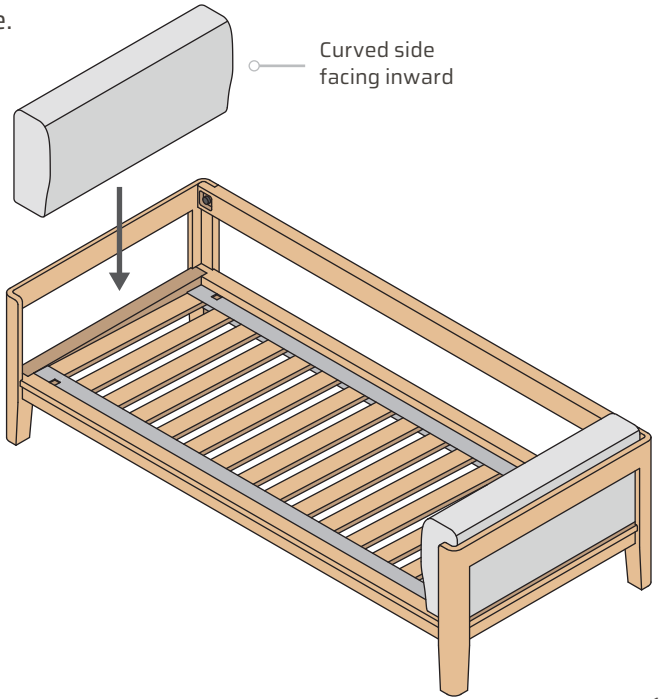

Step 10

Place the **back cushions** along the back support rail.
Make sure they sit inside the recess.

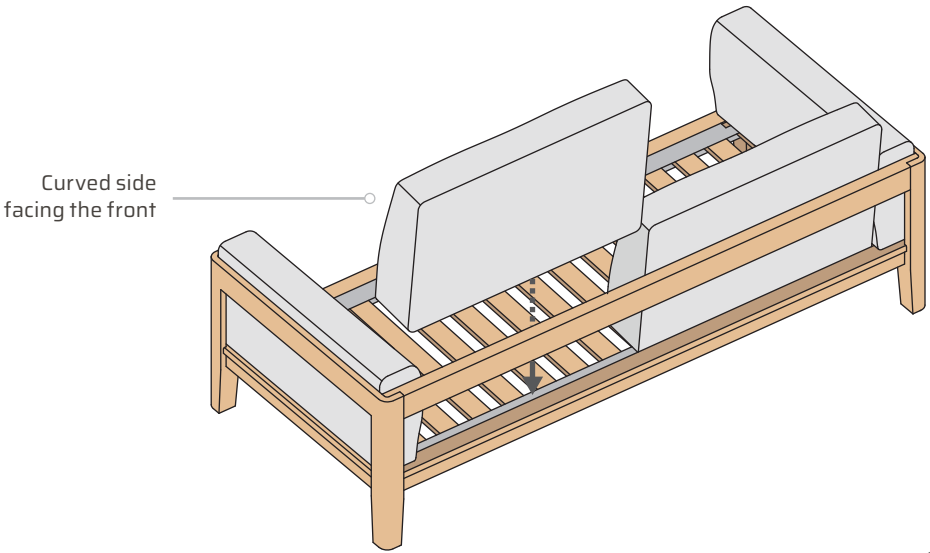

Step 11

Place the **seat cushions** on slats.

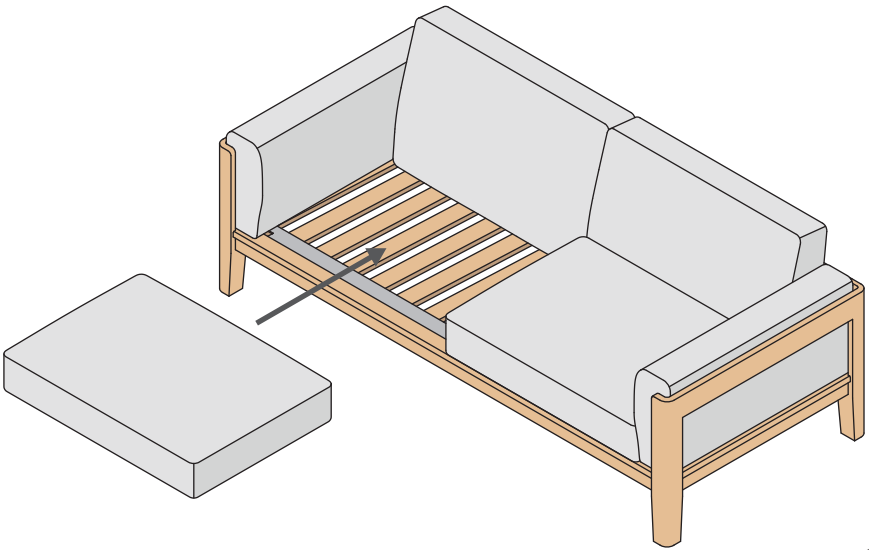

Maintain lasting comfort and shape.

To keep the cushions looking and feeling their best, we recommend occasional care to refresh their shape.

Step 1
Remove back, arm, and seat cushions.

Step 2
Gently fluff each cushion to restore loft and evenly distribute fill. Then smooth and pull covers taut along edges.

Step 3
Replace and align cushions.

For care instructions, see material label

Enjoy.

Light a candle, play some jams, pour a refreshment.
Share moments of oasis @thuma.co

For help and more to love, scan the QR code below.