THUMA

Let’s get together.

Nest Drawer & Nest Shelf Configurations

www.thuma.co

Take care during assembly. Do not dispose of any packaging or contents of the shipping carton until assembly is complete. Avoid balancing unsupported pieces and do not bend over near unsecured pieces. Keep children out of the way during assembly.

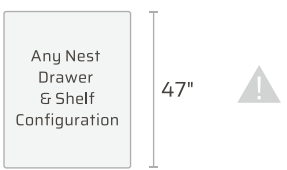

IMPORTANT
Do not stack higher than 47".
Stacking higher than 47" can cause units to topple over if pulled on.

Pieces

Number of pieces included is determined by the product configuration purchased.

Top Tray

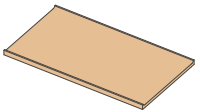

Leveler As needed; see p8.



Long Screw



Nest Drawer

Stacking Unit

Piece labeled with a white sheet.

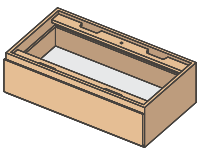

Base Unit

Weighted piece labeled with a black sheet.

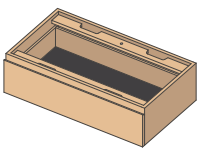

Nest Shelf

Stacking Unit

Piece labeled with a white sheet.

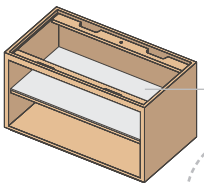

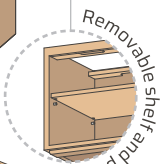

Base Unit

Weighted piece labeled with a black sheet.

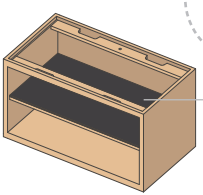

Base Units & Stacking Units

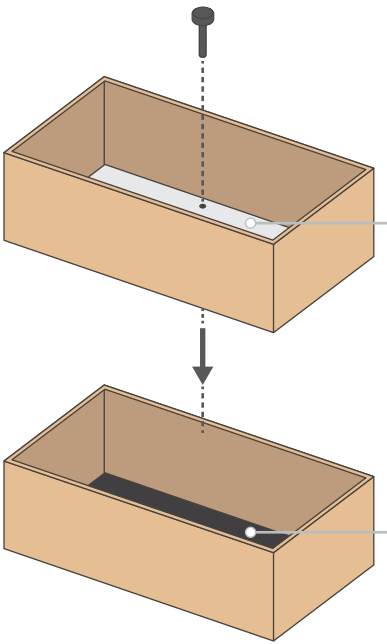

Stacking units are labeled with a white sheet.
These units stack on top of other units.
Do not place on the floor.

Base units are weighted and labeled with a black sheet.
These units are to be placed on the floor.
Do not stack on top of other units.

Step 1

Lay out all pieces.

Lift **base unit** by the handles and place it at desired location.

Set up all base units (black sheets) first.

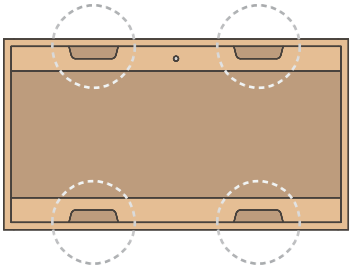

Handles
Recommended to lift with a friend.

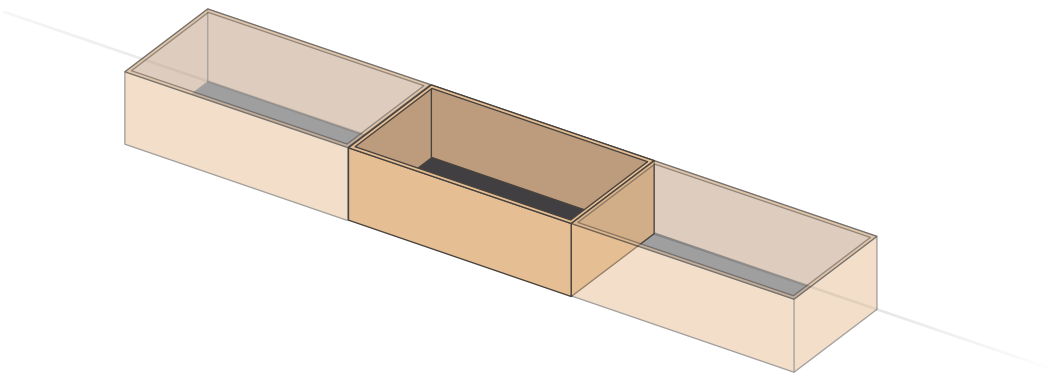

Step 2

A. Lift a **stacking unit** and place it on top of a base unit. Nest Drawer and Nest Shelf stacking units can be stacked on top of any units. Check all four sides to ensure stacking unit is properly nested.

B. Use **long screw** to secure stacking unit to base unit through **lower hole**. Tighten by hand.

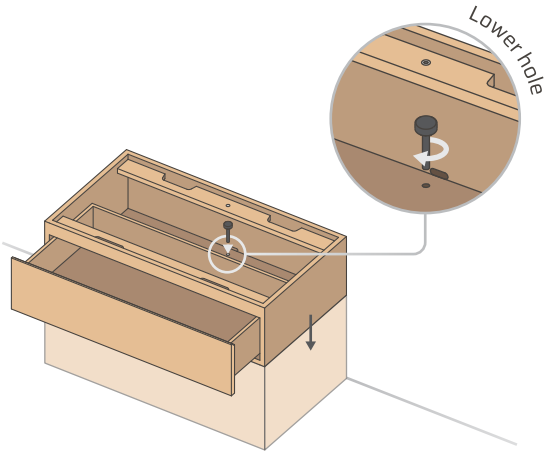

Securing a Nest Drawer

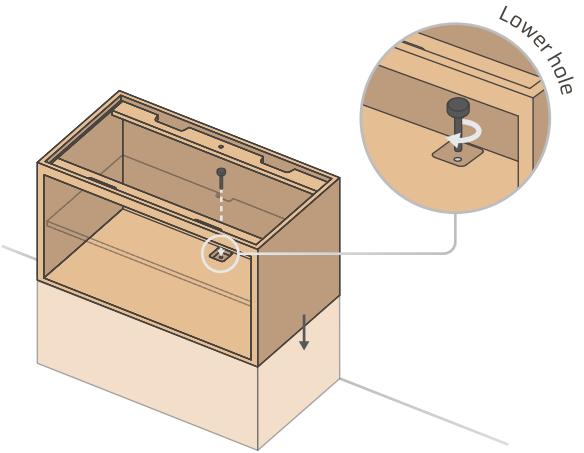

Securing a Nest Shelf

Step 3

Repeat stacking and securing units until desired configuration is reached.
Ensure there is no gap between stacks if configuration expands horizontally.

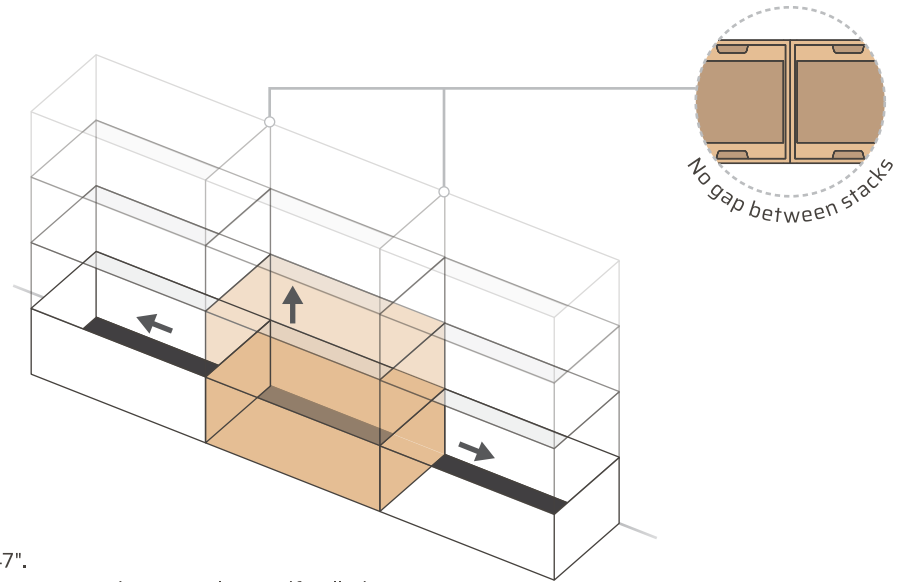

IMPORTANT
Do not stack higher than 47".
Stacking higher than 47" can cause units to topple over if pulled on.

Step 4

A-C. Slide the **top tray** from the front, skis facing down, onto the topmost drawer or shelf.

Check all four sides to ensure top tray is properly nested. No screw needed.

Repeat step as needed.

Remove all sheets.

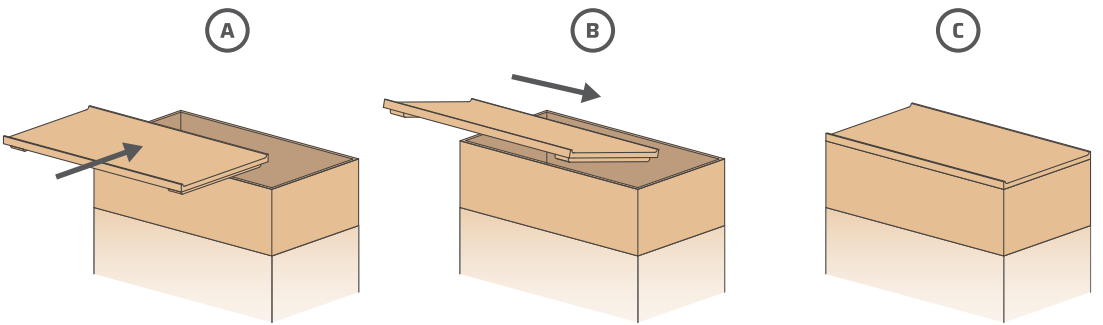

Levelers

Skip this step if floor is level.
If not, use levelers on each base unit.

A. Flip the base unit at a 90° angle. When flipping the Nest Shelf, remove the interior shelf first.

B. Screw in **levelers** at each corner to level the product with the floor, then flip base unit back to horizontal position. Adjust each leveler to ensure product sits evenly and securely, without rocking.

Repeat this step as needed.

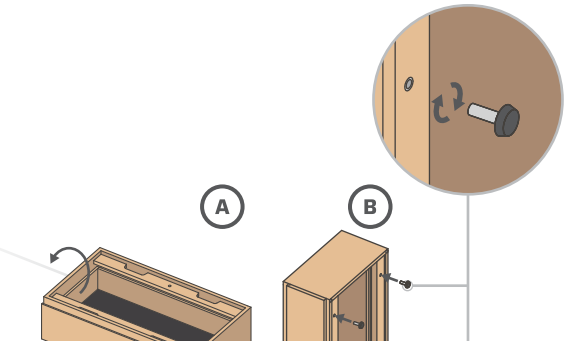

Leveling a Nest Drawer

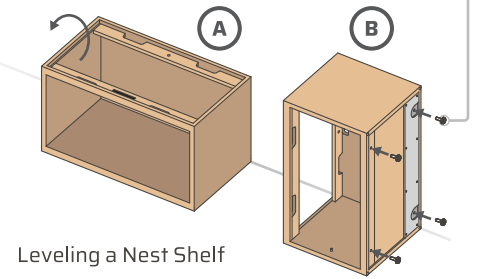

Leveling a Nest Shelf

Anti-Tipping Hardware

To prevent risk of serious injury due to furniture tipping over, secure unit to the wall using anti-tipping hardware included.

Number of pieces included is determined by the product configuration purchased.

Cable



Wall Screw



Wall Anchor



Short Screw



Only for configurations including Nest Shelf.

Step 5

If the topmost unit is a drawer, remove the top tray and the long screw first.
Mark on the wall through the opening.

Repeat as needed.

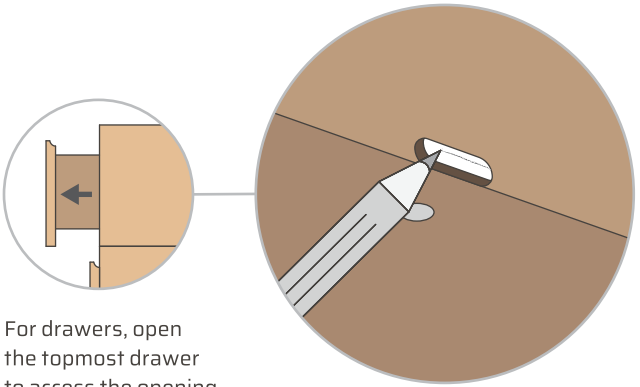

For drawers, open the topmost drawer to access the opening.

Nest Drawer

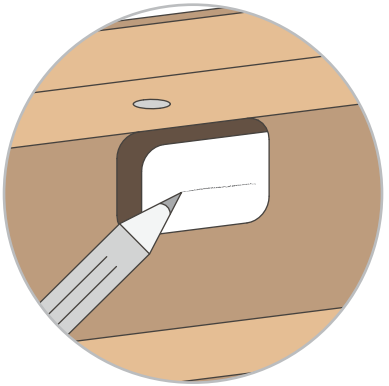

Nest Shelf

Step 6

Rotate the product so it sits at a 90° angle from the wall.

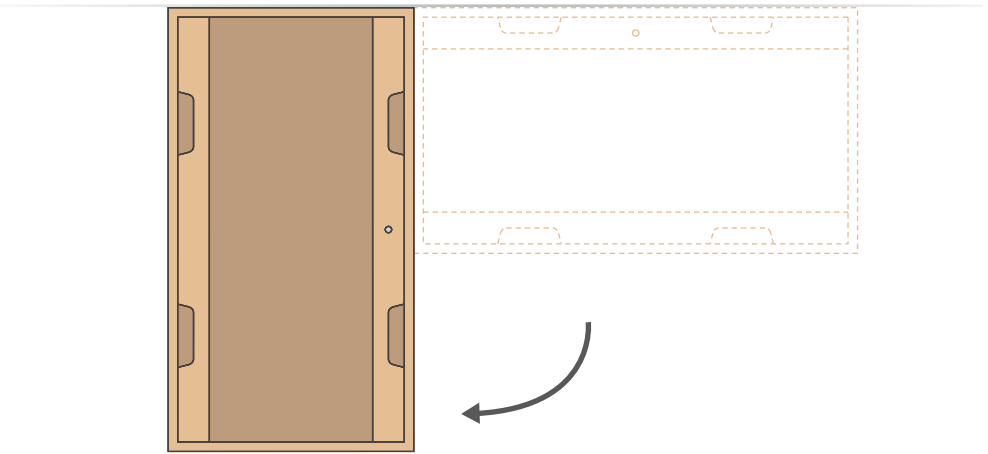

Step 7

A. Drill a hole in the wall with a 9/32" drill bit.

B. Hammer the **wall anchor** into the hole.

C-D. Secure the **cable** to the wall with the **wall screw**.

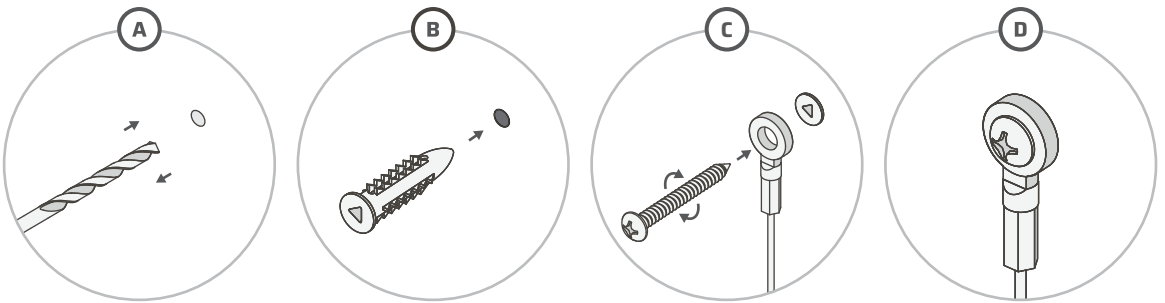

Step 8

Rotate the product toward the wall, but leave a bit of space in between for the final steps.

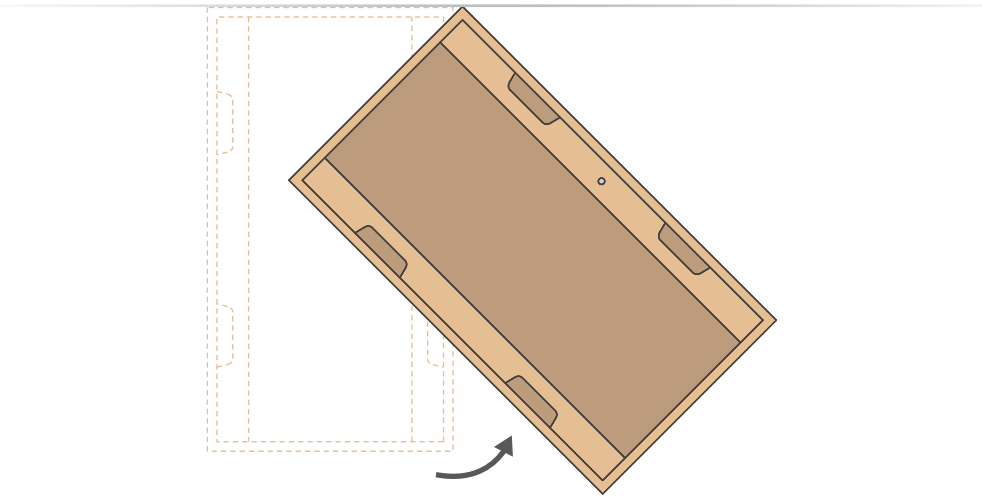

Step 9

Pass the cable through the opening on the back of the topmost drawer or shelf.

This is the same opening used to mark the wall.

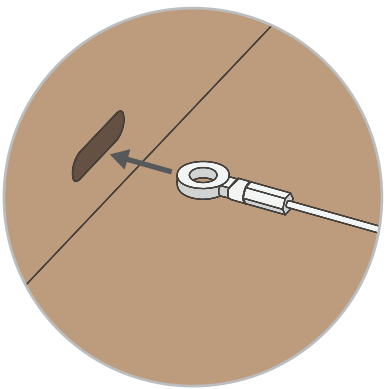

Nest Drawer

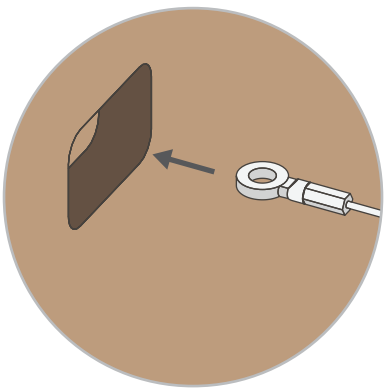

Nest Shelf

Step 10

Use the long screw or **short screw** to attach the cable to the drawer or shelf.
Tighten by hand.

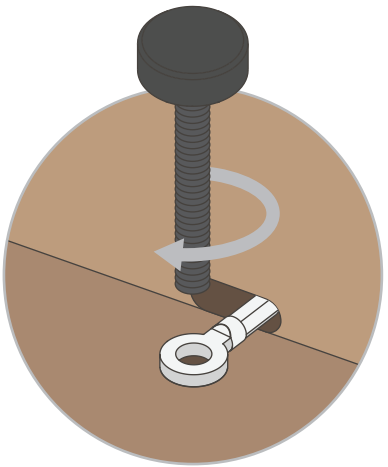

Nest Drawer

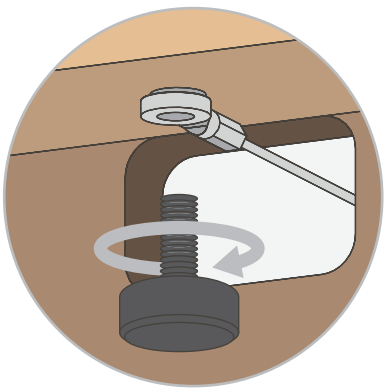

Nest Shelf

Step 11

Push the product against the wall. Align additional stacks, as desired.

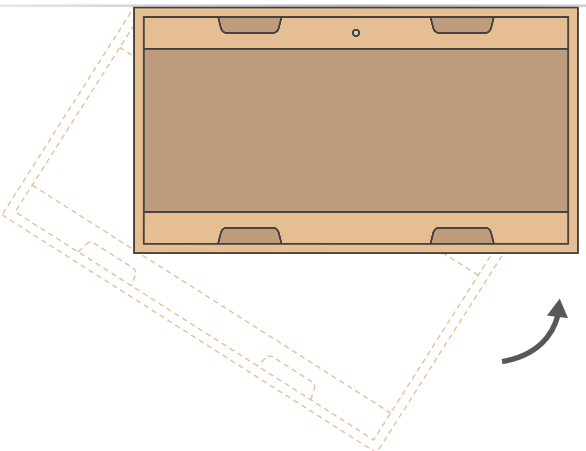

Step 12

A-C. Slide the top tray from the front, skis facing down, onto the topmost drawer or shelf.

Check all four sides to ensure top tray is properly nested. No screw needed.

Repeat step as needed.

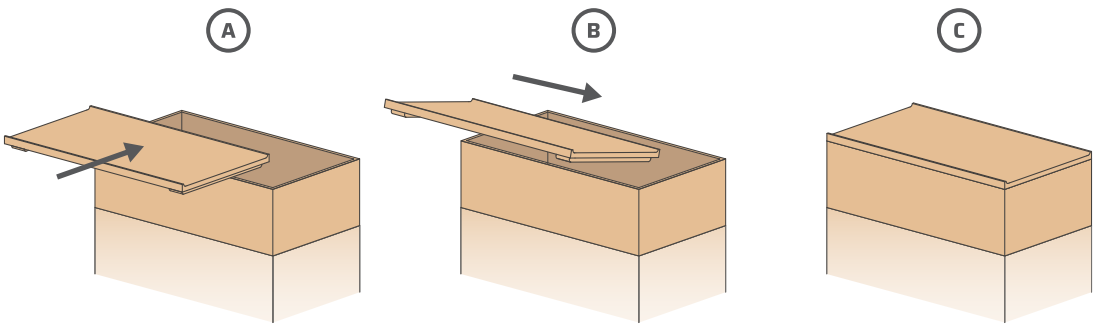

Enjoy.

Light a candle, play some jams, pour a refreshment.
Share moments of oasis @thuma.co

For help and more to love, scan the QR code below.



Designed to be modular and adaptive.

Examples of product configurations include:

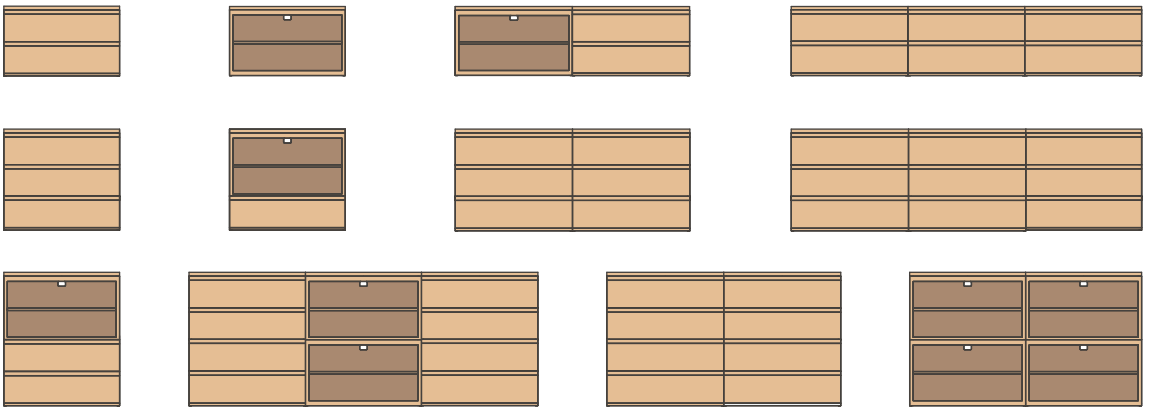

Nest Drawer and Nest Shelf configurations are interchangeable and adaptable. Revisit order confirmation to view configuration purchased.

Scan to explore the collection.