THUMA

Let’s get together.

Signature Sectional

www.thuma.co

Step 1
Set the cushions aside. Lay out the seat units in the desired configuration and placement. Insert one clip into the two pockets of adjoining seat units. Repeat this step until all seat units are connected. Store the extra clip for any future modules or configuration changes.

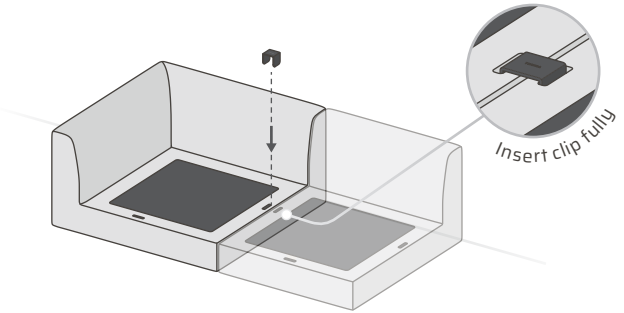

Step 2
Add all seat cushion(s), back cushion(s), and lumbar cushion(s). Enjoy.

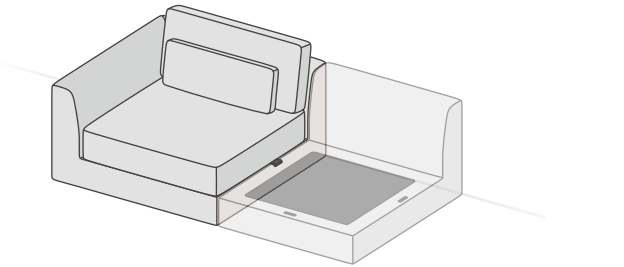

Scan for maintenance tips and slipcover instructions.