THUMA

Let’s get together.

Classic Club Chair

www.thuma.co

Take care during assembly. Do not dispose of any packaging or contents of the shipping carton until assembly is complete. Avoid balancing unsupported pieces and do not bend over near unsecured pieces. Keep children out of the way during assembly. Only use the cushions provided. Assemble in the recommended configuration only.

Pieces

Front Rail x1

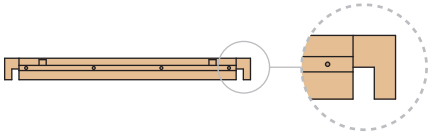

"U" joint

Back Frame x1

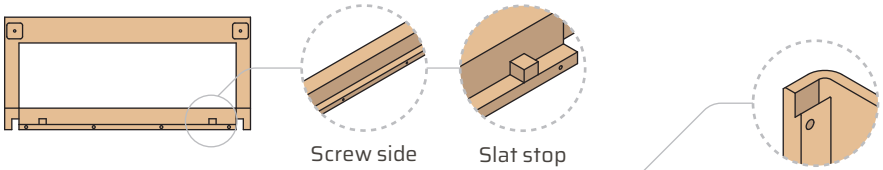

Screw side

Slat stop

Notch

Left Side Frame x1

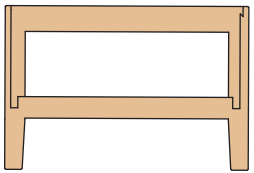

Right Side Frame x1

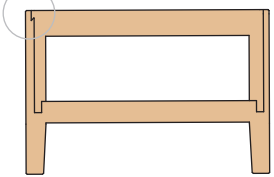

Slats x1

Short Screw x2

Pieces

Arm Cushion x2

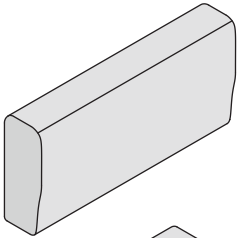

Back Cushion x1

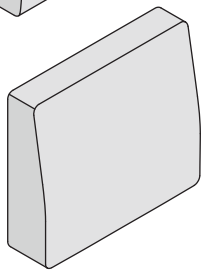

Seat Cushion x1

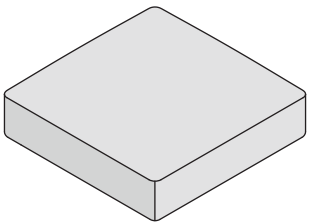

Step 1

Lay out pieces at desired location.

Arrange **side frames** with the notch close to the back side. Arrange **front rail** and **back frame** with “U” joints facing inward, screw side facing up. Step into the center of the frame.

Keep **slats** on the sideline for now.

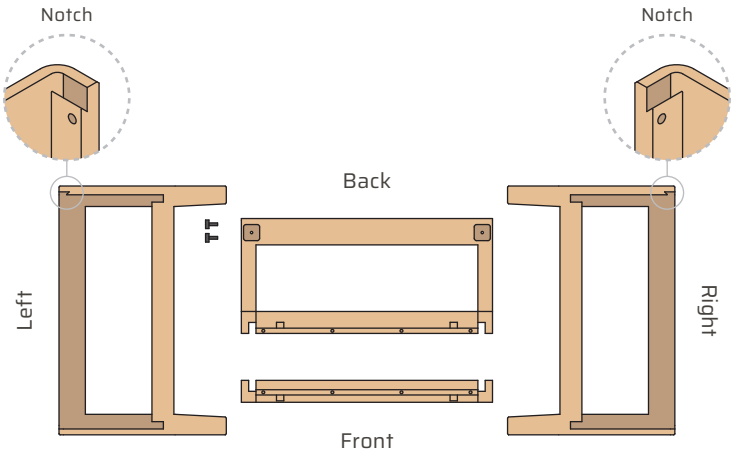

Step 2

Stand up the **left side frame**. Position the back frame with "U" joints facing down and screw side facing inward. While holding the left side frame slightly tilted inward, insert the back frame into the back end of the left side frame. Press down firmly to attach.

Hold pieces in place while moving on to the next step.

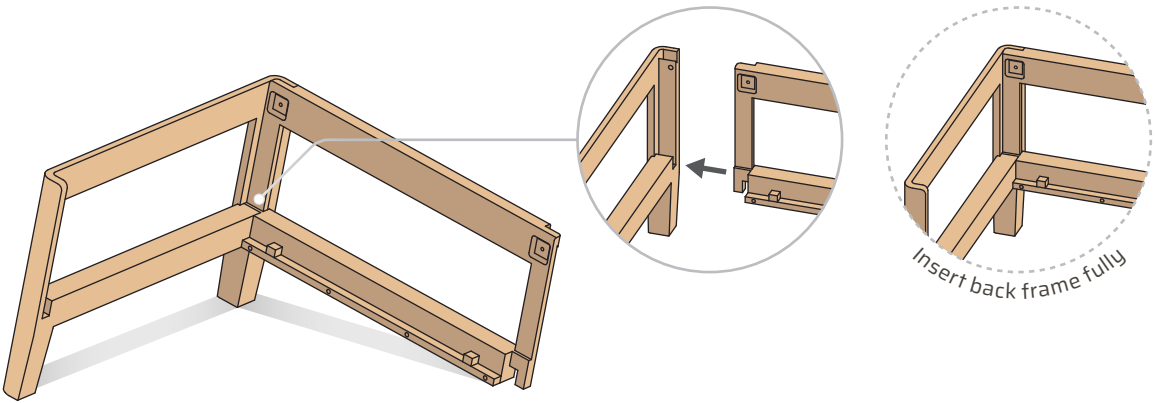

Step 3

Insert the back frame into the back end of the **right side frame**.
Press down firmly to attach.

Hold pieces in place while moving on to the next step.

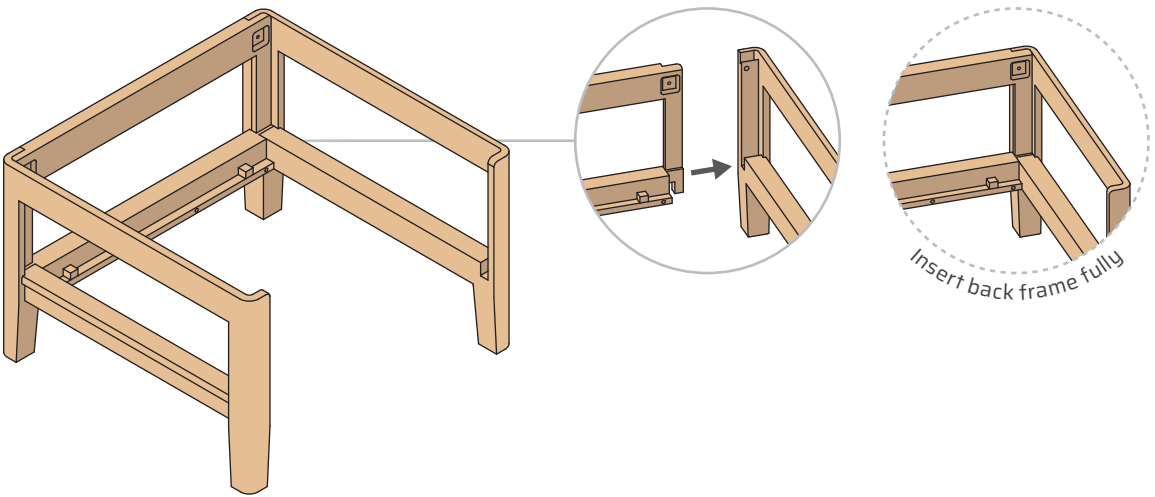

Step 4

Secure the back frame with two **short screws**.
Tighten by hand.

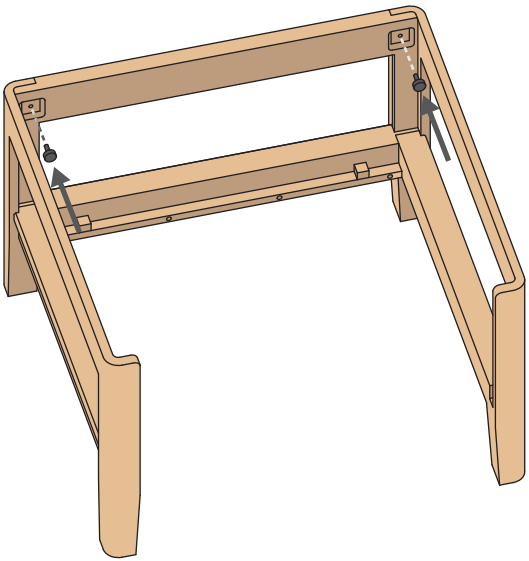

Step 5

Position the front rail with “U” joints facing down and screw side facing inward.

Place the front rail into the front end of each side frame. Press down firmly to attach.

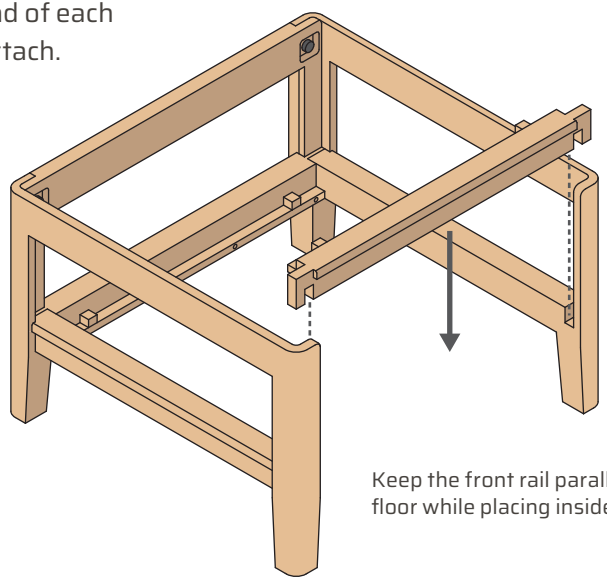

Keep the front rail parallel with the floor while placing inside joints

Step 6

A. Lay rolled slats at one end of the chair. Place the first slat between the side frame and slat stops to hold in place.

B. Roll down to the other end of the chair and place the last slat between the side frame and slat stops.

Slats should be tight and secure.

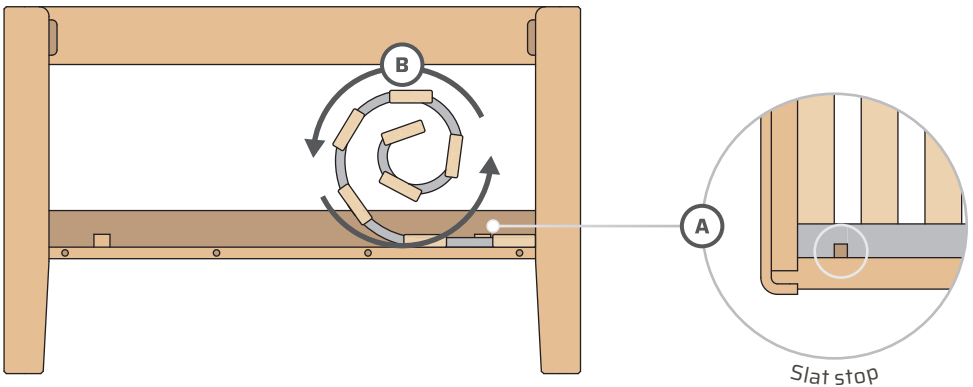

Step 7

Place the **arm cushions** in each side frame. Press to make sure cushions are securely nested into frame.

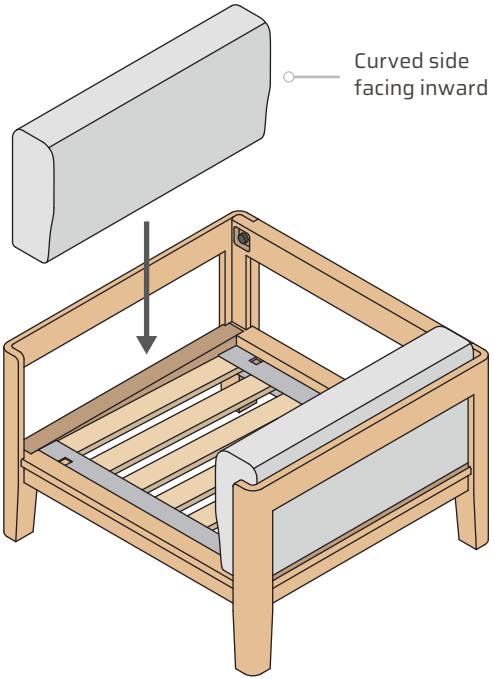

Step 8

Place the **back cushion** along the back frame.
Make sure it sits inside the recess.

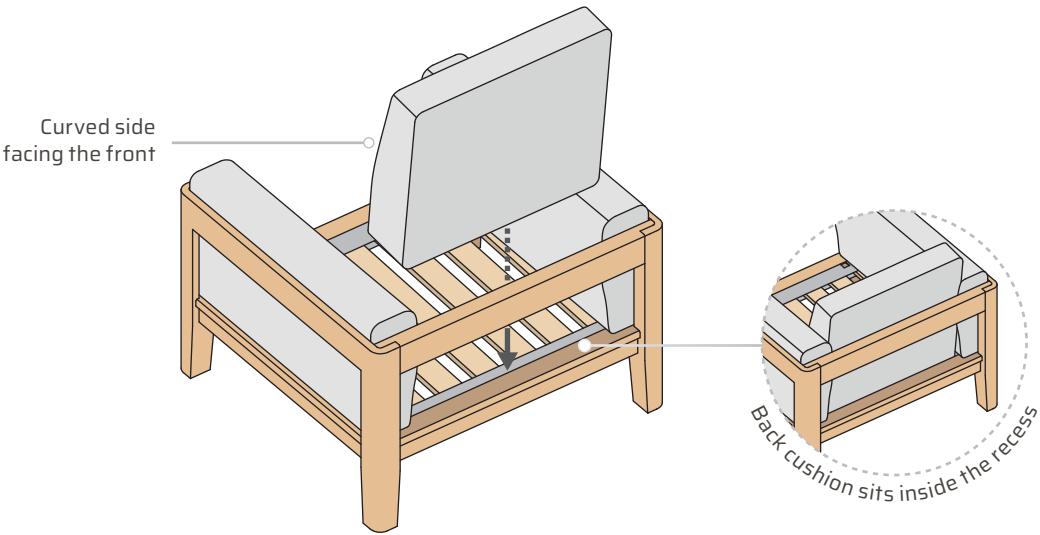

Step 9

Place the **seat cushion** on slats.

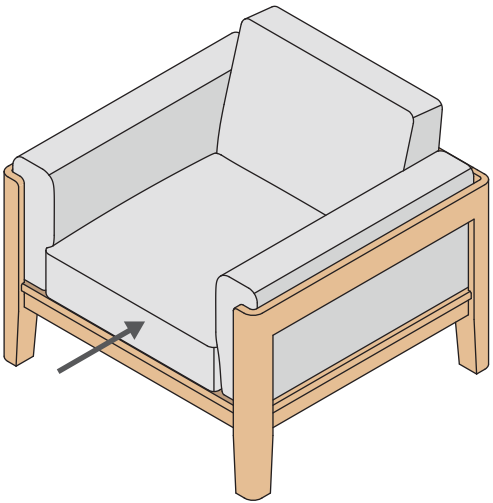

Maintain lasting comfort and shape.

To keep the cushions looking and feeling their best, we recommend occasional care to refresh their shape.

Step 1
Remove back, arm, and seat cushions.

Step 2
Gently fluff each cushion to restore loft and evenly distribute fill. Then smooth and pull covers taut along edges.

Step 3
Replace and align cushions.

For care instructions, see material label

Enjoy.

Light a candle, play some jams, pour a refreshment.
Share moments of oasis @thuma.co

For help and more to love, scan the QR code below.