INSTALLATION INSTRUCTIONS

Taymor

17-8536AL /17-8536SS
8500 SERIES
PUSH PAD RIM EXIT DEVICE

LHR DOOR SHOWN (RHR DOOR OPPOSITE)

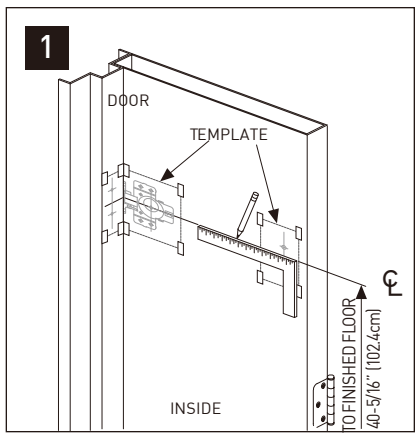

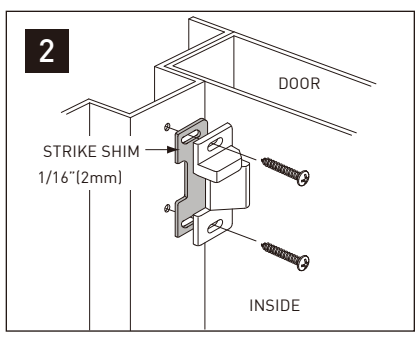

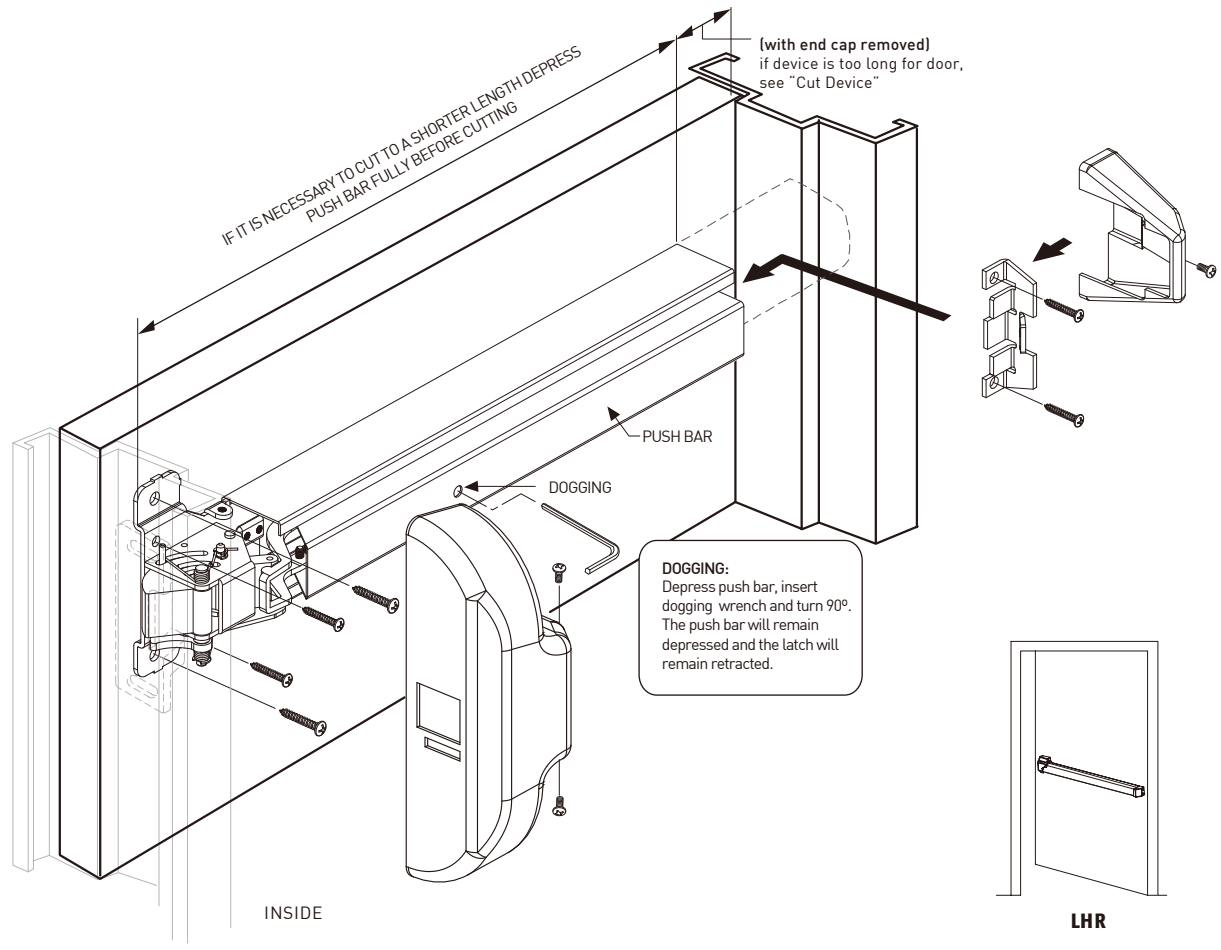

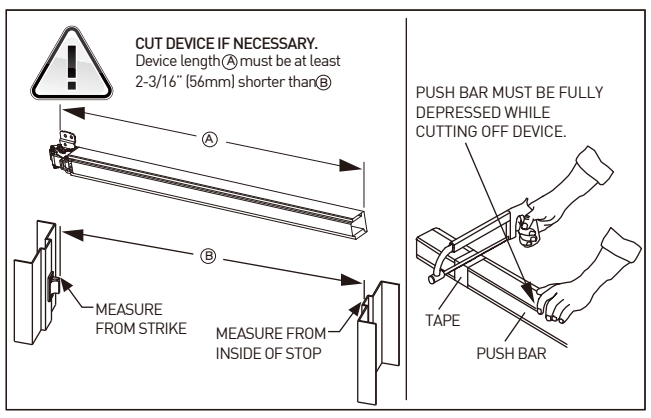

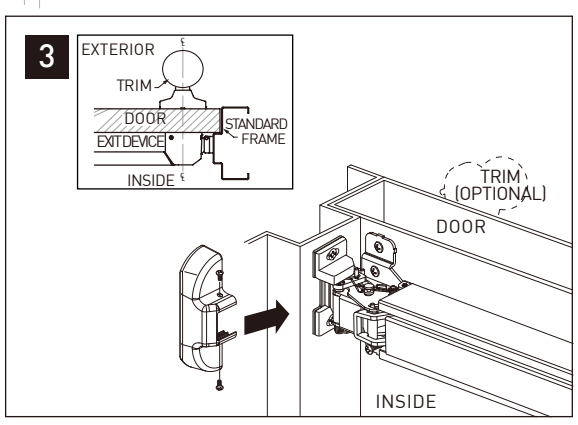

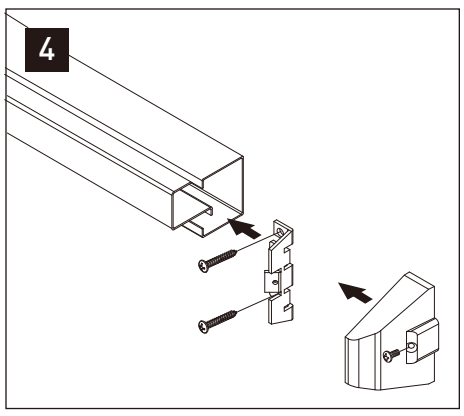

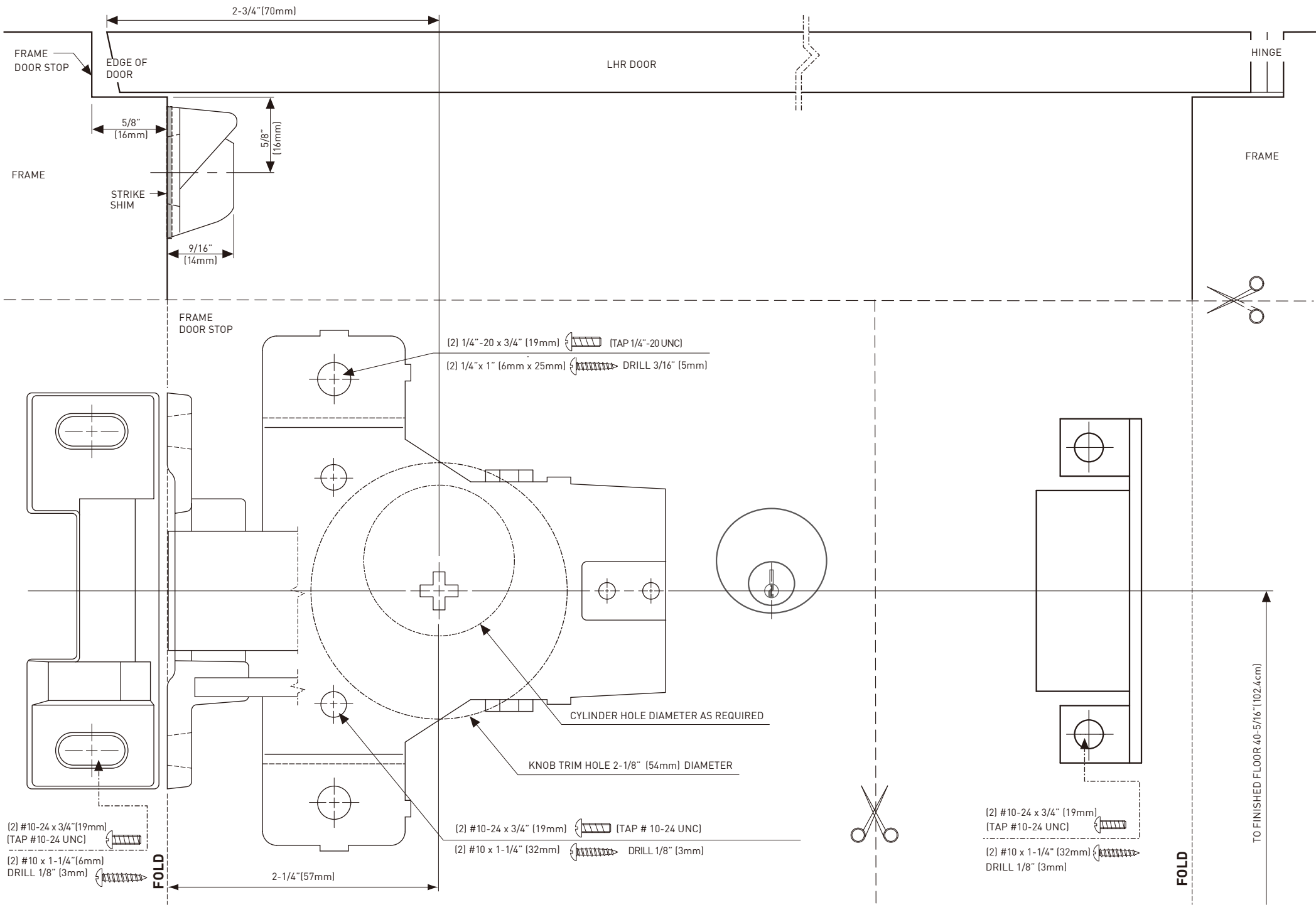

OCTOBER 2010

E26-8D40RS113
10/10-00

taymor.com

® REGISTERED TRADEMARK OF TAYMOR INDUSTRIES LTD