DOOR SECURITY

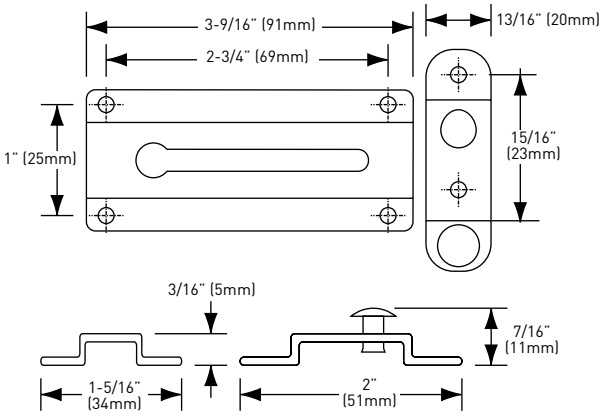

CHAIN DOOR GUARD

- SOLID METAL
- PLATED, WELDED STEEL CHAIN
- INCLUDES MOUNTING SCREWS

CARDED	3 POLISHED BRASS	10B OIL RUBBED BRONZE	15 SATIN NICKEL	26D SATIN CHROME	CASE PACK
CHAIN DOOR GUARD	25-D4804PB	25-D4804ORB	25-D4804SN	25-D4804SC	5

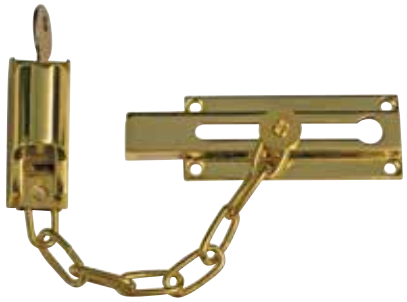

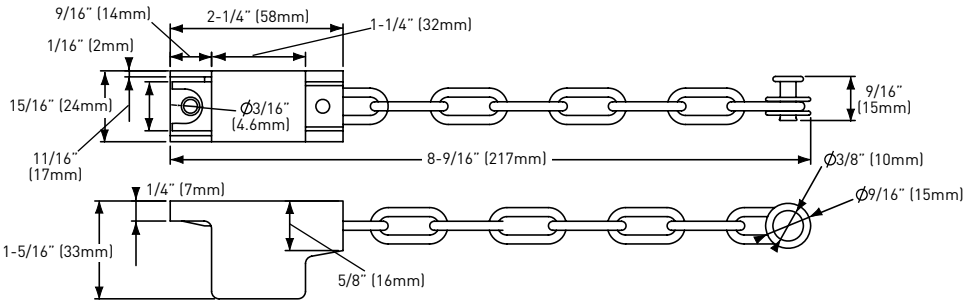

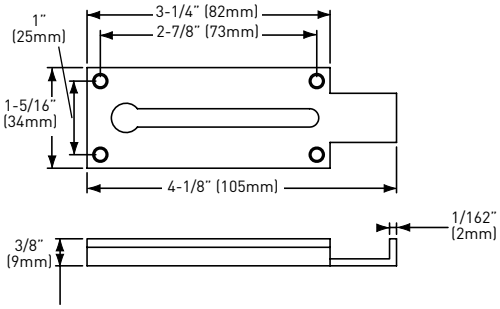

KEYED LOCKING CHAIN DOOR GUARD

- SOLID METAL
- LOCKING KEY ADDS AN EXTRA MEASURE OF SECURITY
- BRASS PLATED, WELDED STEEL CHAIN
- INCLUDES 2 KEYS AND MOUNTING SCREWS

CARDED	3 POLISHED BRASS	CASE PACK
CHAIN DOOR LOCK	37-4815	10