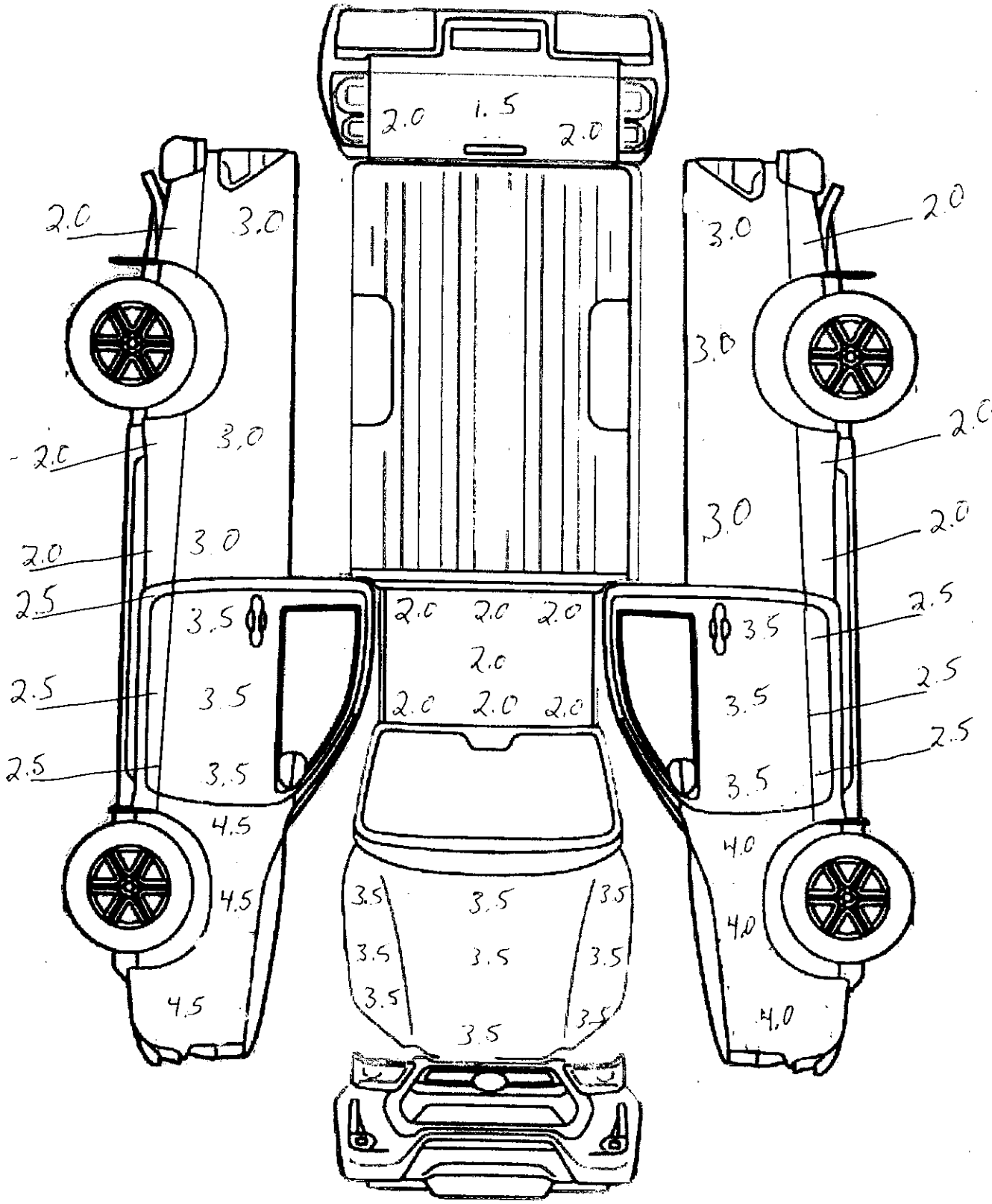
2.0
1.5
2.0
2.0
3.0
3.0
2.0
3.0
2.0
3.0
2.0
3.0
2.0
2.5
3.5
2.0
2.0
2.0
3.5
2.5
2.0
2.5
3.5
2.0
2.0
2.0
3.5
2.5
2.5
3.5
3.5
2.5
4.5
4.0
4.5
3.5
3.5
3.5
4.0
3.5
3.5
3.5
4.5
3.5
3.5
4.0