Process Automation

IMI CCI

100DMT
Multi-trim control valve

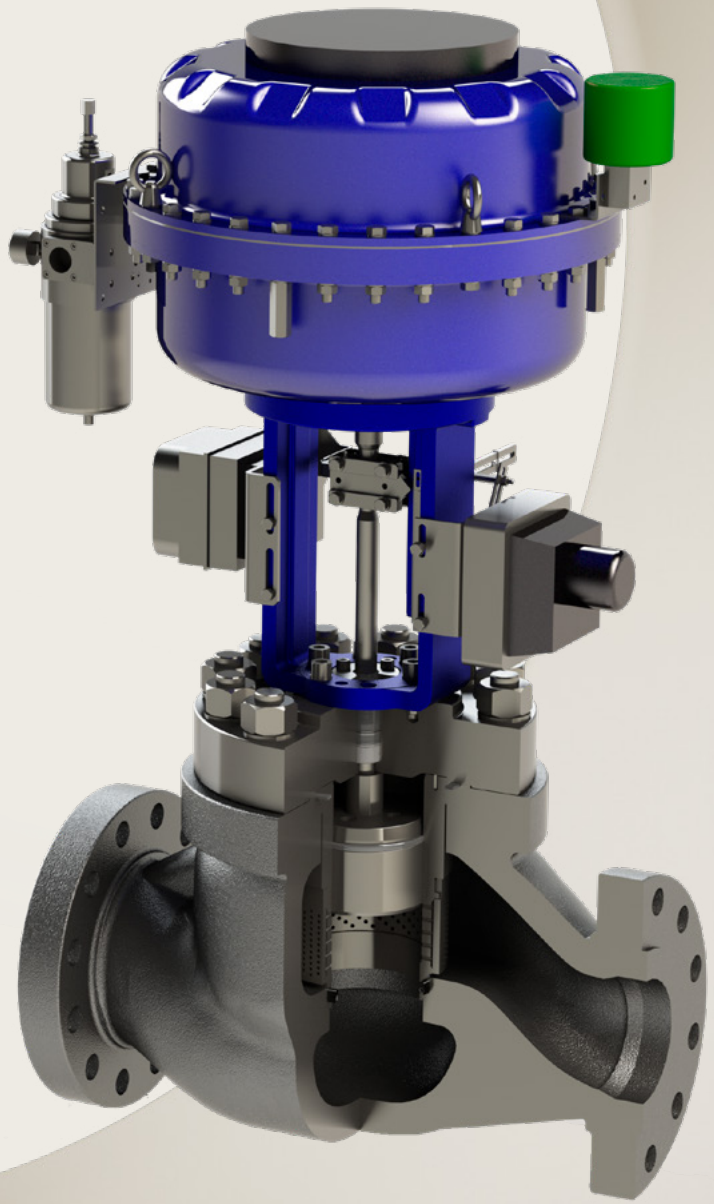

Breakthrough
engineering for
a better world

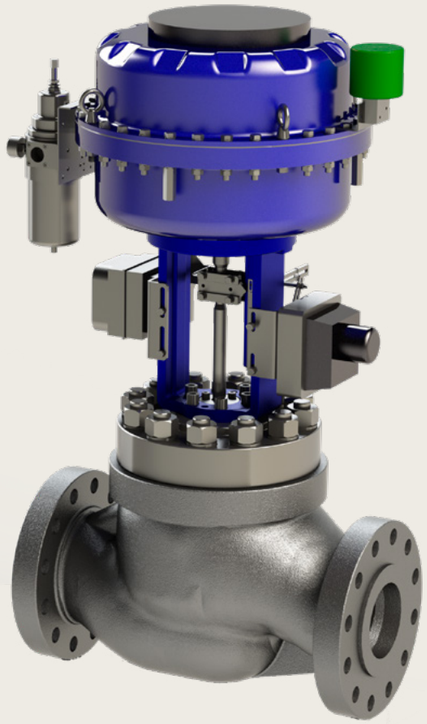

100DMT
Multi-trim control valve

Optimised for on-shore and off-shore applications

The 100DMT control valve has been developed to serve the widest range of applications across the oil and gas industry.

The advanced technical features and standardised design provide best-in-class control and utilisation across applications such as separation, dehydration, degassing, liquefaction and refining with particular suitability for anti-surge compressor control.

During product development particular attention was paid to applying the principle of 'Health and Safety First'.

Key features

- Multi-trim solution for high flow and advanced noise abatement
- Compact, modular design
- Multiple trim sizes within a single valve body envelope
- Suitable for on-shore, off-shore and maritime applications
- Certified for Class A fugitive emissions
- High performance pneumatic actuator

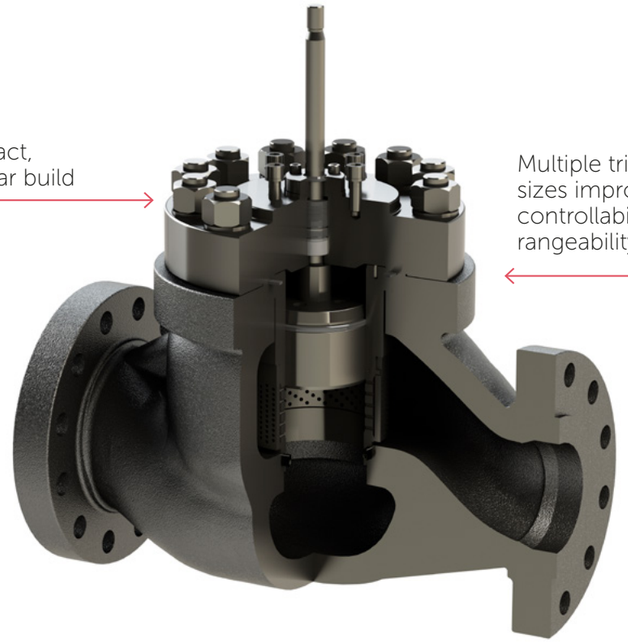

Benefits

Multi-trim solution
- Velocity / kinetic energy control
- Advanced noise attenuation
- Full bore for high flow

Compact design
- Optimised for weight and height
- Reduced number of internal parts
- Easy maintenance

Multiple trim sizes
- Improved controllability and rangeability
- More flexibility in valve size selection
- Variety in trim size configuration

Suitable for on-shore, off-shore and maritime applications
- NACE and NORSOK compliant
- Variety of coating finishes available
- Maintenance free packing design

Certified for class a ISO 15848-1/2 fugitive emissions
- Hazardous gas-leakage prevention
- Removes production losses
- Packing easily interchangeable

Stem packing

Flexible and interchangeable packing sets. Standard packing, fugitive emission packing, low vacuum packing with graphite on request.

NACE

Also avaible on bolts and nuts.

Spiral wound gasket

Metal seal with variable filler material for various off-shore applications.

Trim materials

Various trim materials avaible to suit applications/media.

Body / Bonnet materials

Various body/bonnet materials avaible to suit applications/media.

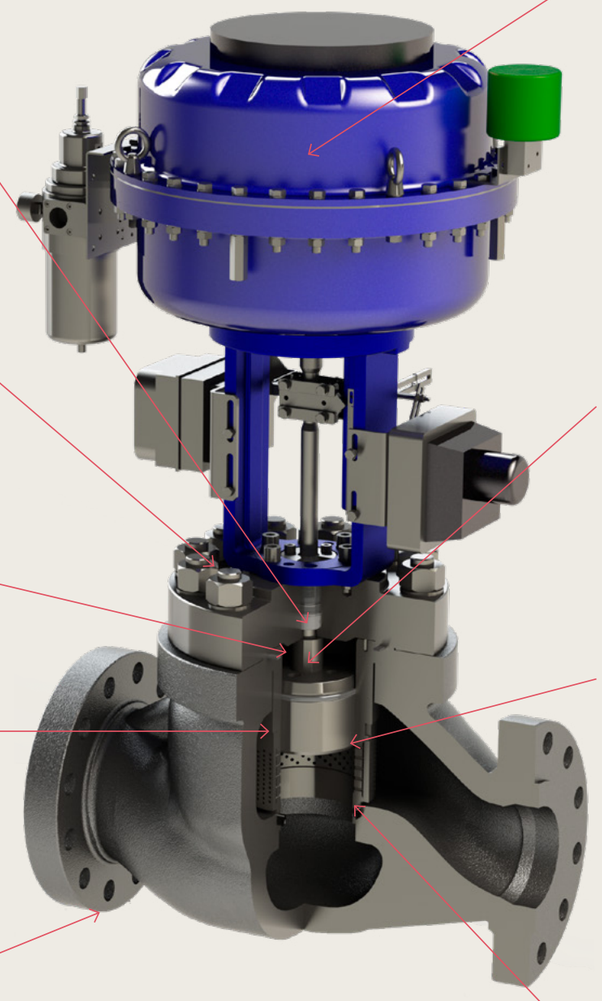

Actuation

Fully standardised pneumatic diaphragm actuator. Suitable for fast and precise stroking.

Blow-out proof stem design

Ensures highest safety standards for plant personnel.

Multi-trim

Easily interchangeable trim. Single stage, dual stage, low noise and high flow.

No screwed or welded parts

Quick-change trim.

Performance data

Materials:
Body / bonnet
- ASTM A216 WCC / A105
- ASTM A352 LCC / LF2 ASTM
- A182 CF8M / F316
- ASTM A995 4A / S31803

Trim:
17-4PH; UNS S31600 / UNS S31803 + Stellite

Trim characteristics:
Linear / equal percentage

Pressure rating and sizes
ANSI 150-900
- 1”, 1-1/2”, 2”, 3”, 4”, 6”, 8”, 10”, 12”

Temperature rating
Design temperature
- -60°C to 230°C

End connections
ANSI B16.5 RF for ANSI 150 to 900 ANSI B16.5 RTJ for ANSI 90

Quality level
Standard
- ASME B16.34, NACE MR0175

Actuator types
Standard
- Single act. pneumatic diaphragm
- Double act. pneumatic piston

Optional
- Electric

Shut-off class
Standard
- ANSI/FCI Class IV & V

Certifications

- Quality – ISO 9001
- PED 2014/68/EU - Mod H/H1
- ATEX 2014/34/EU
- ISO EN 15848-1/2 – class A
- TRCU



General product specification

Pneumatic diaphragm actuation
- Preferred solution for 100DMT product line
- Capable of fast acting speed in emergency and control cases, while also ensuring overall control performance for small movements
- Compact, light-weight design

Pneumatic piston actuation
- Meeting the most stringent demands in terms of long strokes, fast stroking speeds and performance requirements
- Available with additional spring for safety requirements

Other options
- Low power electric actuation options are available on request







Process Automation

The information in this brochure is provided for general informational purposes only. Specifications for products and services are subject to change without prior notice. IMI plc and its subsidiaries own all product brands mentioned herein.
IMI makes no warranties or representations about the accuracy or completeness of the content in this brochure and assumes no liability for any errors or omissions it may contain. We reserve the right to modify, enhance, or discontinue any product or service described herein without prior notification.

IMI CCI

CCI Valve Technology AB
P O Box 603
661 29 Säffle
Sweden
Visit address Industrigatan 7
661 31 Säffle

www.imiplc/process-automation

zXXXXBR en/01/21

Correct Address Should be as follows:

CCI Valve Technology GmbH
Lemböckgasse 63/1,
1230 Vienna, Austria,
Tel: +43 1 869 2740