Process
Automation
IMI STI – 4056_r04_En rev.04 02/07/2025

INSTRUCTION MANUAL

Smart High Performance Positioner

SERIES: SHP

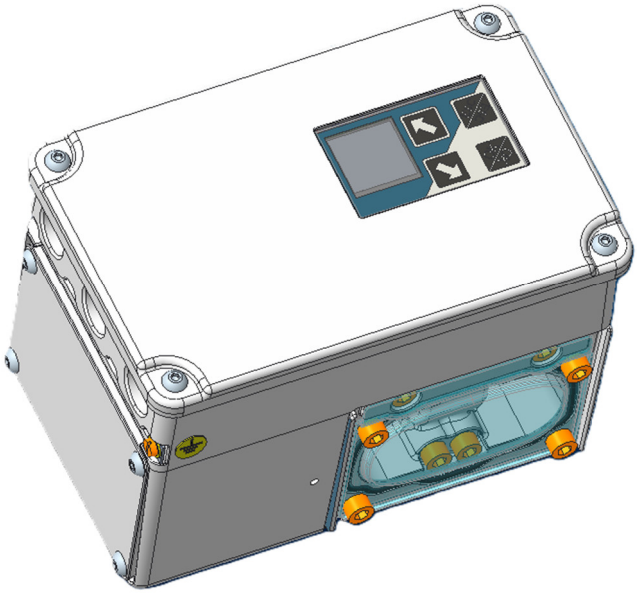

INSTRUCTION MANUAL 4056
(hardware)

Breakthrough
engineering for
a better world

-	-	-	-	-
04	*02/07/2025*	*General Revision*	*D.Pasini*	*R.Valoti*
03	*28/06/2024*	*Added contactless remote sensor*	*M.Coffetti*	*R.Valoti*
02	*26/03/2024*	*Modified images*	*M.Coffetti*	*R.Valoti*
01	*07/12/2023*	*General revision*	*M.Coffetti*	*N.Zenoni*
00	*21/11/2023*	*First Issue*	*M.Coffetti*	*N.Zenoni*
Revision	Date	Description	Issued by	Checked by

IMI STI S.r.l has taken every care in collecting and verifying the documentation contained in this Instruction Manual. The information herein contained are reserved property of IMI STI S.r.l

INDEX

1 GENERAL INFORMATION 6

1.1 GENERAL WARNING 6
1.2 GENERALITIES 6
1.3 MANUFACTURER 6
1.4 TERMS AND CONDITIONS 6
1.5 MANUFACTURER'S LIABILITY 6
1.6 APPLICABLE STANDARDS AND DIRECTIVES 7
1.7 ABOUT THIS MANUAL 8
1.7.1 SIGNS OF WARNING 8
1.7.2 SIGNS OF OBLIGATION 8

2 DEVICE DESCRIPTION 9

2.1 GENERAL DESCRIPTION 9
2.2 AVAILABLE FEATURES 9
2.2.1 MODEL SELECTION 10
2.2.2 CERTIFICATION 10
2.2.3 EXHAUST CONNECTIONS 10
2.2.4 SIGNAL FAIL 11
2.2.5 POSITION SENSOR 13
2.2.6 CONTROLLING THE POSITIONER 14

3 TECHNICAL DATA 16

4 CERTIFICATION 19

5 USER PROCEDURES 21

5.1 TRANSPORT 21
5.2 RECEPTION 21
5.3 STORAGE 21
5.4 INSTALLATION 21
5.5 CHECKS TO BE PERFORMED BEFORE INSTALLATION 22
5.6 DIMENSIONAL DRAWING 22
5.7 PNEUMATIC CONNECTIONS 22
5.7.1 PNEUMATIC CONNECTIONS TO ACTUATOR 23
5.8 ELECTRICAL CONNECTIONS 23
5.8.1 INTRINSICALLY SAFE VERSION 24
5.8.2 EXPLOSION/FLAME PROOF VERSION 29
5.9 EARTHING CONNECTIONS 31

5.9.1 INTRINSICALLY SAFE VERSIONS 31
5.9.2 EXPLOSION/FLAME PROOF VERSION 32
5.10 DISASSEMBLING 33
6 OPERATION AND USE 34
6.1 OPERATION DESCRIPTION 34
6.2 PRODUCT DESCRIPTION 34
6.2.1 INTRINSICALLY SAFE - ALUMINUM VERSION 34
6.2.2 INTRINSICALLY SAFE - STAINLESS STEEL VERSION 35
6.2.3 EXPLOSION/FLAME PROOF - ALUMINUM VERSION 35
6.2.4 EXPLOSION/FLAME PROOF - STAINLESS STEELS VERSION 36
6.2.5 COLLECTED EXHAUST/CLOSED LOOP 37
6.2.6 REMOTE SENSOR - ALUMINIUM VERSION 37
6.2.7 REMOTE SENSOR - STAINLESS STEEL VERSION 38
6.3 INTENDED USE 38
6.4 REASONABLY FORSESEEABLE MISUSE 38
6.5 OPERATING LIMITS AND REQUIREMENTS 38
6.5.1 CABLE GLANDS AND PLUGS 39
6.5.2 PNEUMATIC FITTINGS AND TUBING 39
6.5.3 CERTIFICATION 39
6.5.4 ACTUATOR COMPATIBILITY 39
6.6 RESIDUAL RISKS 40
7 INSTRUCTION FOR THE OPERATOR 41
7.1 ELECTROMAGNETIC INTERFERENCE 41
7.2 PNEUMATIC SAFETY 41
7.3 ELECTRICAL SAFETY 41
8 MAINTENANCE 42
8.1 PERIODIC INSPECTIONS 42
8.2 SPECIAL MAINTENANCE 42
8.3 REPAIRS 42
9 TROUBLESHOOTING 43
10 DECOMMISIONING 44
ANNEX A – FIELD BARRIER MODEL ID 45
A.1 GENERAL PRESCRIPTIONS 45
A.1.1 MANUFACTURER'S IDENTIFICATION DATA 45
A.1.2 GENERAL SAFETY INSTRUCTIONS 45

A.1.3 MAINTENANCE 45
A.2 FIELD BARRIER 46
A.2.1 GENERAL FEATURES 46
A.2.2 TECHNICAL FEATURES 46
A.2.3 INSTALLATION 46
A.2.4 PRODUCT DESCRIPTION 48

1 GENERAL INFORMATION

1.1 GENERAL WARNING

	This Instruction Manual is an integral part of the machine, it should be carefully read before carrying out any operation and it should be kept for future references. **The operators shall adopt the safety precautions required by the country where the product is installed.**

1.2 GENERALITIES

IMI STI products are conceived, manufactured and controlled according to the Quality Control System in compliance with EN ISO 9001 International Standard.

1.3 MANUFACTURER

According to Machinery Directive 2006/42/EC, the Manufacturer of the described product is:

IMI STI, Via Dei Caravaggi 15
24040 Levate, Bergamo, Italy
Tel. +39 035 29282
Fax +39 035 2928247
imisti.sales@imi-critical.com
sti.support@ imi-critical.com

1.4 TERMS AND CONDITIONS

IMI STI guarantees each single product to be without defects and to conform to current goods specifications. Unless otherwise stated on the purchased order, the warranty period is one year from the date of installation by the user, or eighteen months from the date of shipment to the first user, whichever occurs first. Additionally:

- The warranty does not cover products which have been subject to improper storage, improper installation, misuse, corrosion, or which have been modified or repaired by unauthorized personnel (it is not advisable that customer or end users modify the device characteristics).
- The warranty does not cover special products or components not covered by warranty in their turn by subcontractors.

1.5 MANUFACTURER'S LIABILITY

IMI STI declines all liability in the event of:

- The use of the product does not comply with local legislation on safety at work.
- Disregard or incorrect application of the instructions provided on the product label and/or in the instruction manual.
- Incorrect installation and/or use of the product.
- Modifications without STI's authorization and/or work done on the unit by unqualified or unsuitable personnel.

1.6 APPLICABLE STANDARDS AND DIRECTIVES

EN ISO 12100	Safety of machinery - General principles for design. Risk assessment and risk reduction
EN ISO 9001	Quality Management Systems - Requirements
2014/35/UE	Directive for Low Voltage Equipment (LV)
2004/108/EC	Directive relating to the Electromagnetic Compatibility (EMC)
EN 60079-0	Explosive atmospheres - Part 0: Equipment - General requirements
EN 60079-1	Explosive atmospheres - Part 1: Equipment - Equipment protection by flameproof enclosures "d"
EN 60079-11	Explosive atmospheres - Part 11: Equipment - Equipment protection by intrinsic safety "i"
EN ISO 60079-36	Explosive atmospheres. Non-electrical equipment for explosive atmospheres. Basic method and requirements.
EN ISO 80079-34	Explosive atmospheres. Part 34: Application of quality management systems for Ex Product manufacture.
EN 61508:2010	Functional safety of electrical/electronic/programmable electronic safety-related systems - Part 1: General requirements.

This product is designed in accordance with the applicable International Standards and Directives, but the following regulations must be observed in any case:

- General and safety regulations.
- Plant specific regulations and requirements.
- Proper use of personal devices, protective devices (glasses, clothing, gloves, etc.), tools and transport equipment.

See also other related manuals/addendums:

- 4055 – Instruction manual (software).
- 4058 – Approval Nameplates.
- 4059 – QuickStart guide.
- 4060 – Instruction manual (SIS & PST).
- 7008 – SHP model selection.
- 7010 – RS model selection.
- Safety Manual (specific for each certification).

Safety Manuals are not available on IMI STI's website. Safety manuals are shipped with the product. If needed, contact IMI STI to receive a digital copy.

1.7 ABOUT THIS MANUAL

This manual will describe in detail the mechanical functioning of the SHP positioner, covering all possible applications and warnings. For the positioner's software, see dedicated manual, available on IMI STI's website.
It is mandatory to read and follow the procedures described in this manual and any other document that come with the positioner or that is listed within this manual before installation.
IMI STI will not be liable for any damage or harm caused by incorrect installation or manipulation of the product.
Possible hazards are listed in the documents. Additional warnings may be placed directly onto the product.

1.7.1 SIGNS OF WARNING

Be careful where the following symbols are shown. They indicate a potentially hazardous situation, and they warn that if the steps are not properly performed, they may cause serious injury, death or long-term risks to health of exposed persons.

General Danger	Crushing hazard	Power supply hazard

Other symbols:

DANGER
Indicates an <u>imminently hazardous</u> situation which, if not avoided, <u>will result</u> in death or serious injury (*High level of risk*).

WARNING
Indicates a <u>potentially hazardous</u> situation which, if not avoided, <u>could result</u> in death or serious injury (*Medium level of risk*).

CAUTION
Indicates a <u>potentially hazardous</u> situation which, if not avoided, <u>could result</u> in minor or moderate injury (*Low level of risk*).

NOTE
Indicates a <u>potentially harmful</u> situation which, if not avoided, <u>may result</u> in damage of the product itself or of adjacent objects (*Damage to property*).

1.7.2 SIGNS OF OBLIGATION

Be careful where the following symbols are shown. They indicate an obligation that must be respected.

General obligation.	Obligation to wear protective clothing.	Obligation to wear protective footwear.	Obligation to wear a helmet.	Obligation to protect your eyes.	Obligation to protect your hearing.

2 DEVICE DESCRIPTION

2.1 GENERAL DESCRIPTION

The Smart High-Performance (SHP) Positioner is an high capacity and high precision digital pneumatic positioner, mainly used as a valve care controller. Its flow rate and its control algorithm system and logic ensure excellent dynamic performance and very low stroking time. Its advanced diagnostics (on-line and off-line) have been specifically developed to meet all customer needs. Its design allows it to be easily mounted on both rotary and reciprocating actuators. Different mounting kits are available depending on the actuator, so to accommodate all possible applications and strokes.

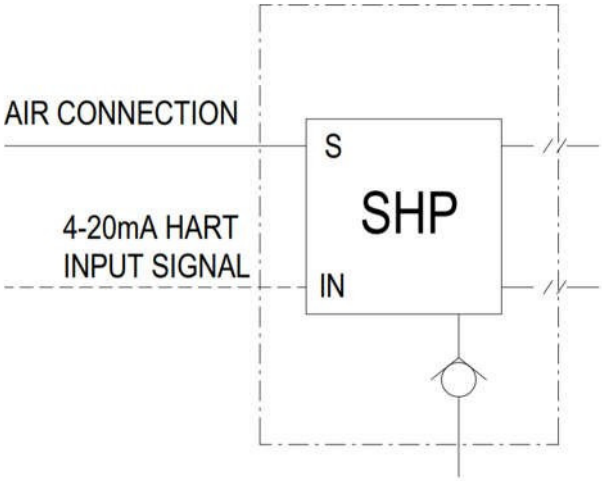

Figure 1

Positioners series SHP are designed to "pilot" and control the position of a valve on which they are mounted on. They receive an analog input setpoint signal 4-20 mA, which not only powers the positioner, but also commands it to reach the required position. By then measuring the position of the actuator/valve through a position sensor, either internal or remoted, the result is elaborated by a microprocessor which in turn activates a pilot valve to modulate air or nitrogen (or, in specific condition, natural gas) sent to the chamber(s) connected to the actuator. The pressures of the chambers and of the supply are continuously measured by three pressure sensors within the enclosure to ensure complete functionality of the positioner at all times.
As an additional function, the SHP positioners may modulate a passive 4-20 mA analog feedback signal, to indicate the actual position of the actuator/valve to the user.
SHP positioners are designed to be installed in an hazardous area within a mechanical/pneumatic control unit enclosure, according to the specific location and requirements by the competent certification authority.

2.2 AVAILABLE FEATURES

The SHP positioner is suitable for a number of different applications, based on the need of the end user. Depending on the application, the configuration of the positioner will change, and so will the connections (both electrical and pneumatic), the dimensions and the need for additional external accessories.

2.2.1 MODEL SELECTION

For the definition of the exact models, please refer to 7008 – Model Selection. The latest revision is available on IMI STI's website.

	Please note that not all product configurations are available. **For more information, please contact:** imisti.sales@imi-critical.com sti.support@imi-critical.com

2.2.2 CERTIFICATION

The SHP positioner is available for installation in different classified areas and applications. The certifications available are listed in section 4.

	Selecting the proper certification is of crucial importance, as an incorrect choice may cause harm or damages.

The certifications available cover three main categories:

- Ordinary location: no additional measures are needed, apart from general safety requirements for the operators during installation and use.
- Intrinsically safe: it is mandatory to respect the requirements of the application and of the certification. The user shall be responsible for using proper electrical sources and equipment.
- Explosion/Flame proof: the intrinsically safe devices come with an attached Zener barrier for additional protection. The same rules as for intrinsically safe devices shall be adopted. The end user is responsible for ensuring that all measures listed in this document and in the relative safety manual are taken.

2.2.3 EXHAUST CONNECTIONS

2.2.3.1 Standard Exhaust

The standard version of the SHP positioner presents two check valves that are positioned on the inside of the enclosure. The check valves are engineered to ensure that the positioner can be employed even in the most needing applications, maintaining an high CV of 2,3. The check valves exhaust the working gas directly into the atmosphere from the side openings of the positioner, with no residual risk for nearby operators. The standard exhaust cannot be used when the working gas is considered dangerous, such as in cases where natural gas is employed.

2.2.3.2 Collected Exhaust

For applications where natural gas is employed, or in any case where the working gas cannot be let into the atmosphere for any reason, the collected exhaust version can be selected. In these configuration, the internal check valves are substituted by plugs, and an additional but compact block is attached to the side of the enclosure of the positioner. The additional block has a threaded opening with a 1 ½" NPT size, ensuring full exhaust capabilities. By connecting proper pipes and pipes fittings, all exhaust of the positioner during operations is exhausted through this point only, ensuring that the gas can be collected properly. The size of the fittings depends on the efficiency needed for the application. Using a fitting or a pipe too small could restrict too much the exhaust of the positioner, hence reducing its capabilities and performances. For further information regarding the size of the positioner with the attached block, see section 6.

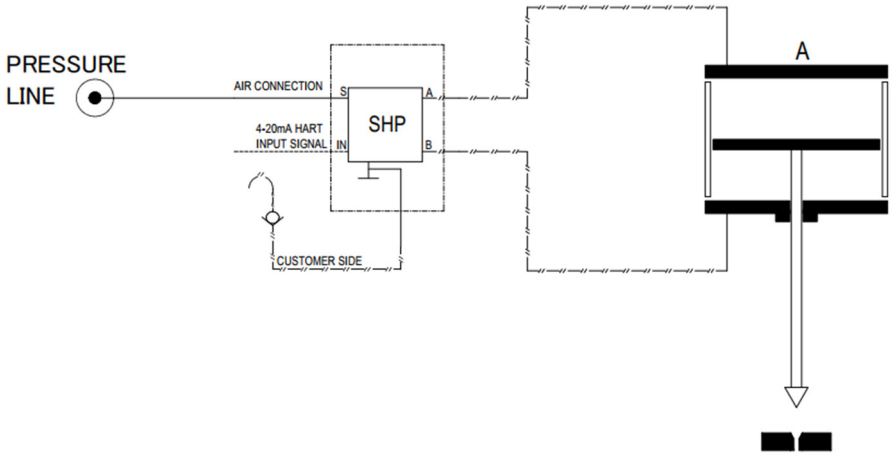

Figure 2

2.2.3.3 Closed Loop

The SHP positioner can also be employed in applications where the closed loop is a necessity. For these applications, the positioner comes equipped with the same block as the collected exhaust version, but the internal check valves are not plugged. Thanks to this, the standard exhaust of the positioner can be employed as the general exhaust of the actuator improving overall performances and control over the functioning of the actuator. Furthermore, the fluid from the pressurized chamber will be used to conditionate the non-actuated chamber. Pneumatic connection must be performed accordingly.
See chapter 5 for further information regarding pneumatic connections.

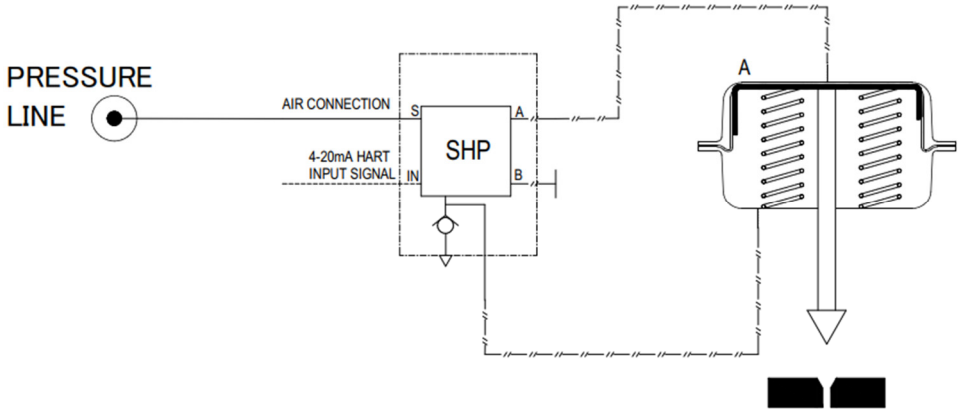

Figure 3

2.2.4 SIGNAL FAIL

2.2.4.1 Fail Safe

The standard fail position of the SHP positioner is “Fail Safe”, meaning that in case of any problem the actuator moves to the fail position designated during the design of the actuator.
In case of either loss of signal or loss of supply, fail position is reached bypassing the electronic board commands. Depending on the actuator:

- For double acting actuators, the chamber connected to port A is depressurized, whilst the one connected to port B is pressurized.

- For single acting actuators, port A depressurizes. Pneumatic connections must be performed according to the type of actuator and which actuator's chamber has to be controlled.

For further information regarding the pneumatic connections, see chapter 5.

If any other problem occurs during operation (i.e. the sensor cannot read the position or the position goes out of range), the actuator will be positioned in the designated fail position, commanded by the electronic board. The required fail position must also be correctly set via software. Pneumatic connection must be performed considering the type of actuator (single or double acting) and the fail position needed for the application.
For further information regarding the pneumatic connections, see chapter 5.
For further information regarding software settings, see dedicated software manual, available on IMI STI's website.

2.2.4.2 Fail Freeze

Additionally, the SHP positioner offers the "Fail Freeze" configuration, so that in case of signal or supply failure, the actuator stays in position. There are two possibilities when it comes to this version:

- "Two Wires Fail Freeze": this solution offers the possibility of controlling a dedicated piezo-valve, which controls a pneumatic circuit that, in its most basic applications, is similar to the one of the following picture.
  Inside the case, an additional electronic board is installed, to ensure that the positioner is the one commanding the piezo-valve, as to not cause any movement when operations are resumed after failure. The commands are sent by making use of the digital outputs, which will therefore not be available in case this configuration is chosen. The main advantage of this solution is the fact the piezo-valve is powered and controlled by the positioner, therefore eliminating the need of a separate wiring for it. This solution is available for intrinsically safe executions only:

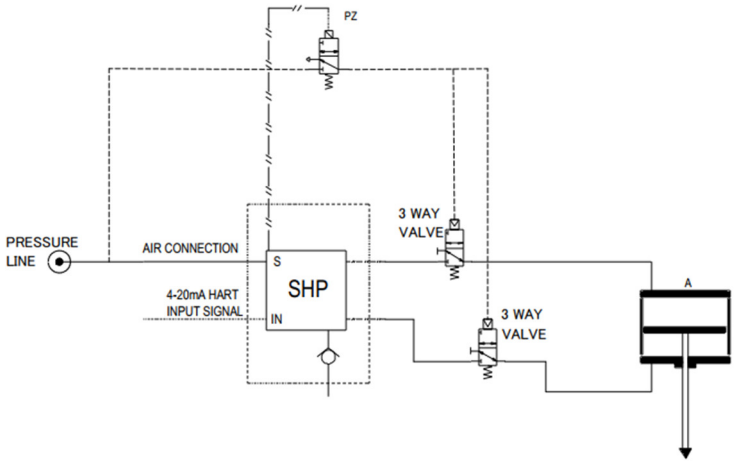

Figure 4

- "Four Wires Fail Freeze": for this solution to work, an electro-valve is connected to the positioner through an intermediate switch amplifier. The positioner commands the electro-valve by means of the digital outputs, which will not be available if this option is selected.
  The advantage of this solution is that it can be employed even in the most demanding applications, including explosive atmospheres. Additional wiring is needed to power the electro-valve. To select this configuration, first select a "Fail Safe" positioner, and the select the "Four Wires Fail Freeze" (+4WF) in the Options field of the model selection.

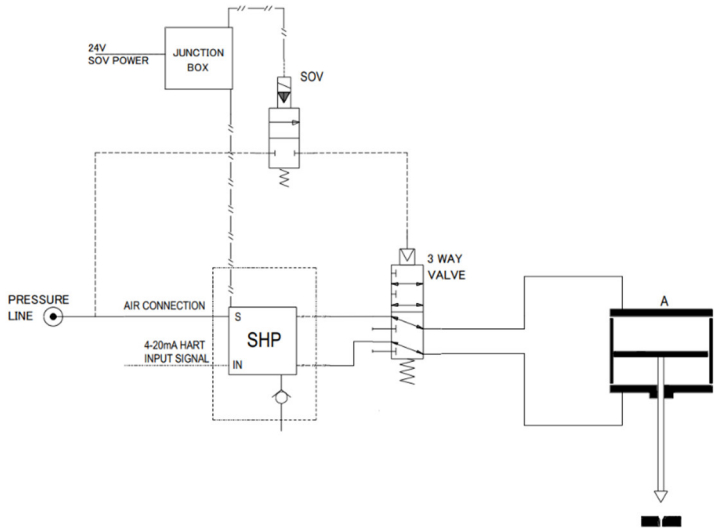

Figure 5

For additional information regarding electrical connections, see chapter 5.

2.2.5 POSITION SENSOR

There are different technologies when it comes to the position sensor that can be employed in the SHP positioner to read the position of the actuator/valve.

2.2.5.1 Magnetic Sensor

The feedback from the actuator is traduced in terms of a change in a magnetic field. An additional magnet holder is required for this option to be chosen. In case the actuator is of rotary type, the holder can be attached directly onto the actuator. If the actuator is of linear type, a motion converter and/or a lever system must be employed. The magnet holder will then rotate according to the position of the actuator. A sensor, which is mounted within the enclosure, is contactless inserted inside the magnet holder to accurately read the position during the movement, up to 360°. The sensor is internally connected to the main electronic board on a dedicated port and requires no additional power from the exterior. The connection is performed by IMI STI's personnel. The end user shall not disconnect it unless instructed to do so by IMI STI's technicians.
IMI STI's offers a wide range of different magnet holder's attachments to accommodate all applications:

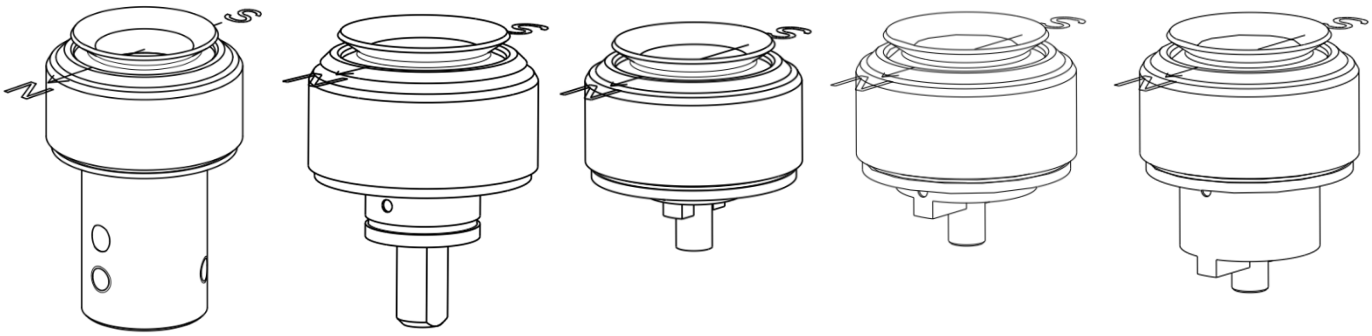

Linear actuators	Diaphragm Actuators	Angle Amplifiers (by IMI STI)	Quarter turn actuators - Namur	Quarter turn actuators - Namur

2.2.5.2 Potentiometric Sensor

Potentiometric sensor: the feedback from the valve is traduced in terms of change in resistance due to the rotation of the potentiometer. The potentiometer is connected to J4 port of the electronic board. Connection is performed by IMI STI's authorized personnel only. The potentiometer requires no additional power. The end user shall not disconnected unless instructed to do so by IMI STI's technicians.

2.2.5.3 Remote Sensor

Both of the previous technologies can be either installed directly into the positioner, which will then be installed directly onto the actuator, or they can be installed in the Remote Sensor (+RS Option).
The Remote Sensor is a stand-alone unit that can be positioned onto the actuator to read the actual position while the positioner is mounted up to 20 meters away, depending on the application. Being connected to the positioner, the position read is then transmitted to it, with virtually no loss of information nor precision in reading. The Remote Sensor is available in different configurations. For further information please refer to its dedicated model selection (7010 RS Model Selection). The connection between the Remote Sensor and the positioner happens on port J4. The Remote Sensor requires no additional power to function as it is powered directly from the main electronic board present in the positioner.

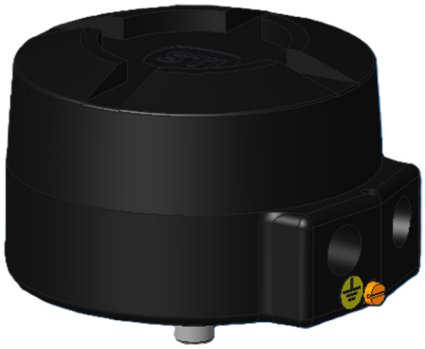

Figure 6

The Remote Sensor option is available for any execution available for the positioner, as the certificates also apply to it. It is designed to operate in harsh environments and in applications where high vibration occur.
It is available in two different materials. The material must coincide with the one chosen for the positioner.
During installation, follow accurately the instructions and the pneumatic/electric diagrams as improper installation may cause irreparable damage and harm.
For calibration of the remote sensor, follow the instructions in the software manual.
For additional information regarding electric connections, see chapter 5.

2.2.6 CONTROLLING THE POSITIONER

The SHP positioner communicates by means of the HART protocol. When in service, the required position can be transmitted by means of changing the 4-20mA signal on the input port. Thanks to the dedicated software, the HART protocol can be taken advantage of, allowing for a total control of the positioner. All data needed for proper functioning of the positioner can be collected and visualized, in real time, using the dedicated software.
In case of any trouble with the functioning of the positioner, the software can be used to collect all the data necessary for a proper troubleshooting, which shall be performed by IMI STI's personnel.
The standard pack is available on IMI STI's website. Additional functionalities can be obtained selecting the packs available in the Options field in the model selection.
Furthermore, by selecting the proper version, the positioner can be equipped with a capacitive display that allows to start tests/auto calibration process or to visualize basic data (such as pressure or position) during functioning directly from the positioner. The display's orientation can be rotated to accommodate any way of installation of the SHP positioner. The proper functioning of the display is ensured for temperature between $-40°C \leq T_{amb} \leq 85°C$. Outside this range, the display might not work properly. Complete functionality of the display will become available again once the ambient temperature re-enters the interval.

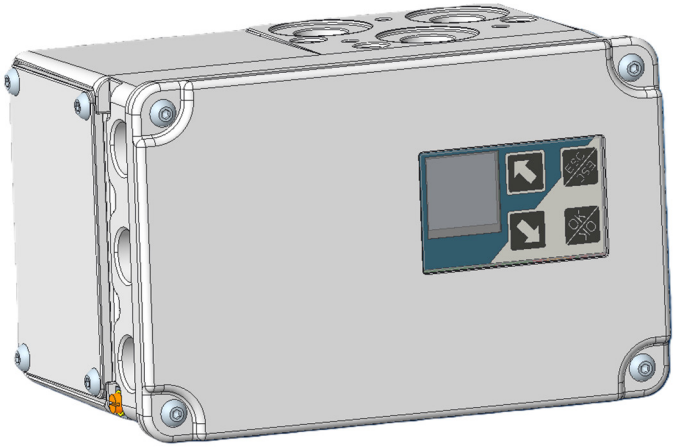

Figure 7

For further information regarding the dedicated software and its full capabilities, please refer to 4055 – Software Manual.

3 TECHNICAL DATA

HARDWARE	DESCRIPTION
HOUSING	Stainless steel ASTM A351 (painted on request)
	Low copper aluminum EN AC 43500 (painted as per ATEX/IECEx regulations)
TOTAL WEIGHT	<9 kg (stainless steel version – intrinsically safe)
	<4 kg (aluminum version – intrinsically safe)
TOTAL DIMENSIONS	Less than 255mm x 145mm x 155mm
MECHANICAL INTERFACE	Fixing screws according to VDE/ VDI 3845 (NAMUR)
PNEUMATIC CONNECTIONS	3 x ½" NPT female
ELECTRICAL CONNECTIONS	3 x ½" NPT female (Ex ia) / 1 x ½" NPT female (Ex d)
PNEUMATIC	**DESCRIPTION**
OPERATING PRESSURE RANGE	2.5 / 10.5bar – 150PSI (fail freeze 8bar, natural gas 7bar)
DESIGN PRESSURE	15bar / 220 PSI
INSTRUMENT GAS	Instrument air / natural gas / nitrogen / sweet and dry gases, according to ISO8573-1:2010 class [3:3:3], considering: • Air max particle size: 5 μm (40 μm can be accepted with potential expected life reduction). • Purity: Class 3 (class 6 or 7 can be accepted with potential expected life reduction). • Pressure dew point: Class 3 or 10 K below min expected operating temperature, whichever is lower. • Oil content: (Class 3) Max oil concentration: 1mg/m^3
HIGH FLOW	Supply Cv max = 2.3 / Exhaust Cv max = 2.3 (180 Nm^3/h @ 6bar / 21°C) (Air consumption < 1.5 Nm^3/h @ 6bar / 21°C)
LOW FLOW	Supply Cv max = 0.3 / Exhaust Cv max = 0.3 (25 Nm^3/h @ 6bar / 21°C) (Air consumption < 0.5 Nm^3/h @ 6bar / 21°C) (Air consumption < 0.16 Nm^3/h @ 6bar / 21°C for Low Bleed application – available only for Low Flow)
POSITION FEEDBACK	**DESCRIPTION**
GENERAL NOTES	Contactless sensor into positioner, able to work 360° rotation
	Remote contactless sensor (option), up to 20m distance from the positioner
ENVIRONMENT	**DESCRIPTION**

GENERAL NOTES	Operating temperature range = -55°C / +85°C (-67°F / +185°F), see Ex certificate for T4 - T5 - T6
	Storage temperature range = -55 / +85°C (-67°F / +185°F)
	IP 66 / TYPE 4X

ELECTRONIC	DESCRIPTION
GENERAL NOTES	Communication protocol HART 7, 4-20mA
	Input voltage range = 10-30V (Ex ia) / 18-30V (Ex d)17-30V (Two Wires Fail Freeze versions)
	Impedance < 500Ω (Ex ia) / < 900Ω (Ex d) < 850Ω ((Two Wires Fail Freeze versions)
	Output signal 4-20mA passive loop (10÷26.5V Ex ia / 14.5÷24.5V Ex d)
	Digital input 24V isolated quantity 2 configurable
	Digital output 24V isolated quantity 2 configurable (quantity 2 NPN or quantity 1 NAMUR), external power supply needed
	Electric consumption < 1W
	Electronic internal loop update rate = 10ms
	Analog output update rate = 10ms
PERFORMANCES	**DESCRIPTION**
QUICK ACTION	100ms (time needed to achieve Cv max starting from Cv = 0)
HYSTERESIS + DEAD BAND	+/- 0.10% (measured at 21°C / 120° rotation)
REPEATABILITY	+/- 0.05% (measured at 21°C / 120° rotation)
SENSITIVITY	+/- 0.10% (measured at 21°C / 120° rotation)
LINEARITY	+/- 0.30% (measured at 21°C / 120° rotation)
THERMAL DRIFT	From -55°C to +85°C <0.4% (from -40°C to +85°C < 0.1%)
APPLICATIONS	**DESCRIPTION**
FAIL SAFE	Pneumatic connection A vent / B pressurized
FAIL FREEZE	With piezo valve and dedicated 3-way valve(s)

EMC SUMMARY RESULTS – IMMUNITY

PORT	PHENOMENON	BASIC STANDARD	PERFORMANCE CRITERIA
ENCLOSURE	Electrostatic discharge (ESD)	IEC 61000-4-2	A
	Radiated EM field	IEC 61000-4-3	A

I/O SIGNAL/CONTROL	Rated power frequency magnetic field	IEC 61000-4-8	A
	Burst	IEC 61000-4-4	B
	Surge	IEC 61000-4-5	B
	Conducted RF	IEC 61000-4-6	A

4 CERTIFICATION

MAIN CERTIFICATIONS		
EXECUTION	CERTIFICATION	CERTIFICATE NUMBER
S	CE Ordinary Location	-
I/D	IECEx	IECEx EUT 23.0014X
I/D	ATEX	EPT 23 ATEX 5227 X
Z	UL ordinary location	Coming soon (2025)
F/G	UL hazardous location	Coming soon (2025)

REGIONAL CERTIFICATIONS / APPROVALS	
EXECUTION	CERTIFICATION
N/M	INMETRO
E/X	ECASEx
P/O	PESO
C/L	CCC
T/R	CU TR
A/B	SANS (Coming soon)

"Execution" refers to the first letter of the model chosen. Please refer paragraph 2.2 of this manual and 7008 – Model Selection for further information.
SIL certification up to "SIL 3" is available for all models with the exception of Two Wires Fail Freeze models.
For further information regarding the area classification of each certification and approval, see 4058 – Approval Nameplates.

A fixed label is attached on the product when the device is sold. It is forbidden to modify the information and the marks without previous written authorization by IMI STI.
For further information, contact IMI STI or see related safety manual.
Make sure that the information regarding the certification is the same as the execution chosen. If not, immediately contact IMI STI.

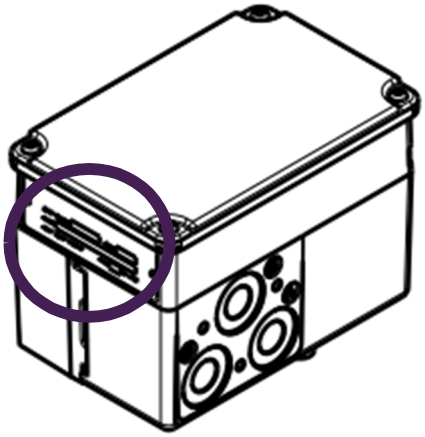

Figure 8

The certification chosen must be in accordance with the application. IMI STI will not be liable for positioner mounted in an incorrect location.
Removable of the label or any change of information on it will void the warranty.

⚠	**Selecting the proper certification is of crucial importance, as an incorrect choice may cause harm or damages.**

To comply with the requirements of the certifications, some models may appear with additional labels. It is mandatory to read the related manual (4058 – Approval Nameplates) to understand if the chosen model needs to have an additional label. In case the additional label is not present, immediately contact IMI STI.

5 USER PROCEDURES

	Not performing the following procedures will invalidate the product warranty

5.1 TRANSPORT

	Always wear protective clothing, gloves, and eyewear to prevent personal injury. Handling operations shall be made by qualified staff and in compliance with the laws and valid provisions.

5.2 RECEPTION

Check if the model corresponds with the one reported on the purchase order and if no defects are visible on the product. Product related documents are furnished with documents accompanying the machinery where the product is mounted on. If the product is sold alone, contact IMI STI or download the documentation from IMI STI web site.

5.3 STORAGE

To maintain the product in perfect condition, proper attention must be observed to preserve the product during the storage period. Remember to:

- Place the product on a wood surface pallet or on metallic support, avoiding direct contact with the ground.
- Protect the product with appropriate covering.
- Make sure that plastic plugs are present on the pneumatic and electrical connections. If stored outdoor, replace plastic plugs with metal plugs that guarantee perfect tightness.
- Keep the product protected from weather conditions.

5.4 INSTALLATION

	Always wear protective clothing, gloves, and eyewear to prevent personal injury. Check with your process or safety engineer for any additional measures that must be taken to protect against process media.

Remove the positioner from its packaging: the pneumatic and electric port are protected by plugs not suitable for working. They must be removed, and all ports not connected must be plugged with tight plug suitable for the pressure rating, area classification and positioner's certification. Before installation take care about the following points:

- The pneumatic and electrical connections must be performed according to the diagram, label and information in this manual.
- To achieve optimum performance from the SHP Positioner, use shielded cables.
- The use of a ground strap between the positioner housing and a suitable earthed point is necessary.
- When performing electrical connections inside the positioner housing, observe ESD handling precautions.
- The use of a conductive, earthed, wrist strap is recommended.
- The supply circuit must be protected to prevent the voltage or current exceeding the stated limits.

- The equipment must be provided with cable entries and filler plugs certified according to the required certification.
- The fluid must be chemically compatible with the gaskets and lubricant used in the installation.
- The working fluid must be filtered. Best performances are obtained with a 5 μm filter. Lower degree filtration, up to 40 μm, is acceptable but will cause faster degradation and lower performances.
- When positioner is installed in a hazardous area, ensure that electrical barriers are used between the positioner and the electrical power sources.
- Only trained personnel should be allowed to alter the software control parameters. Incorrect settings may lead to personnel injury and or property damage.

5.5 CHECKS TO BE PERFORMED BEFORE INSTALLATION

To allow for a correct installation of the product, verify that the product's outer surface is free from dust and dirt. If not, clean it with a humid cloth and remove anything that might prevent a correct installation. Then, check if the coupling dimensions meet the specified ones and prepare all the necessary tools for the assembly and setting of the unit. See related safety manual.

5.6 DIMENSIONAL DRAWING

For dimensional drawing, section and spare parts, see chapter 6.0.

5.7 PNEUMATIC CONNECTIONS

⚠	**Check that the supply pressure is lower than the product design pressure.Use appropriate pipes and fittings (type, rating, material, and dimensions).The connection shall be made by qualified staff.**

To guarantee the best performances, follow the instructions below:

- Properly deburr the ends of rigid pipes.
- Properly clean the interior of pipes sending through them plenty of the supply fluid used in the system.
- Mold and fasten the connection pipes in order to avoid overstress on the connection parts and to avoid losing of the threaded connections.
- Use the recommended quantity of pipe sealant, only on male threads (no-hardening sealant is strongly recommended).
- Make the connections according to the machinery (i.e. actuator) pneumatic diagram.
- Check that no leakage occurs from pneumatic connections. If necessary, tighten the fittings.
- Collect tubing as indicated in the technical data table.

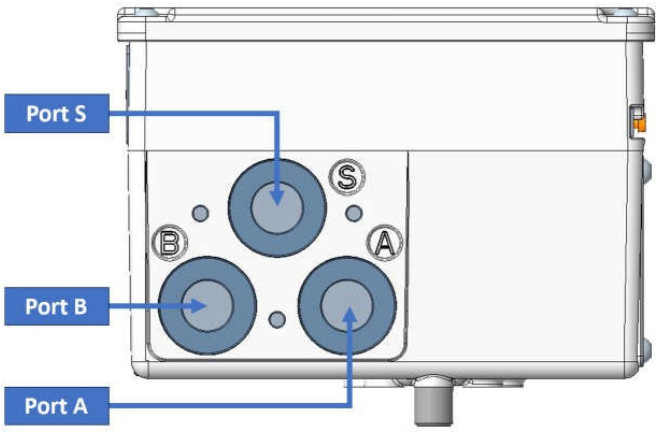

Figure 9

NOTE

Pressure line port S, port A and port B are ½" NPT female.
To reach full flow performance, SHP positioner "High Flow" version requires that the piping between SHP and actuators has to be minimum ½" without any restriction, as short as possible. For the "Standard Flow" version (CV=0.3), the pneumatic connections must be minimum ¼", with the same conditions as before. The pressure line pipe must be sized to avoid significant pressure drop during the actuator stroke.
During piping connection, be careful to keep clean the internal side of piping and fittings free from threaded sealing material and any other contaminant.
The SHP positioner can operate between 2.5 bar and 10.4 bar. In any case, the line pressure must be set lower than actuator design pressure.

	The positioner will not be able to operate correctly if the supply pressure is lower than the design one.

No load or bending moment are allowed by piping on SHP connection.

5.7.1 PNEUMATIC CONNECTIONS TO ACTUATOR

The SHP positioner is suitable for rotary or linear actuators, double acting (with or without spring) or single acting actuators. In case of power fail and/or signal fail, port "A" is fully exhausted and port B is fully pressurized.

1) Double acting actuators
   Port "A" must be connected to the actuator air chamber that has to be exhausted at signal fail.
   Port "B" must be connected to the other actuator air chamber that has to be pressurized at signal fail.
2) Single acting actuators
   Port "A" must be connected to the actuator air chamber.
   Port "B" must be plugged.
3) Single acting actuators – reverse mode
   Port "A" must be plugged.
   Port "B" must be connected to the actuator air chamber.

Reverse mode, available only for single acting actuators, must be selected from the software. See dedicated software manual for further information.
To check the correct connections have been made, the system supply can be pressurized without any power signal. It is important to test the pneumatic connection whilst the actuator is not operative on field. With no power, the actuator/valve moves to the signal fail position. If for any reason that does not happen, the pneumatic connections may have been performed incorrectly or the software configuration might have been set incorrectly (i.e. connecting port B in a single acting actuator without selecting "REVERSE" mode from the software).

5.8 ELECTRICAL CONNECTIONS

Electrical connections change considering which SHP version is selected. Electrical connections depend on "Execution" version (intrinsically safe or explosion proof) and "Signal Fail Position" version (fail safe or fail freeze).
"Two Wires Fail Freeze" version is available only for intrinsically safe execution. For Explosion or Flame proof executions, the "Four Wires Fail Freeze" (+4WF) option can be selected, coupled with a "Fail Safe" positioner.
The impedance for intrinsically safe executions of the positioner is lower than $500\ \Omega$. Due to the additional electronic board needed for the solution, the "Two Wires Fail Freeze" impedance is higher, up to 850Ω.
For the same reason the Flame/Explosion proof executions have an impedance that is lower than $900\ \Omega$.
The end user must make sure that the 4-20mA signal used to power and command the positioner takes this into consideration, otherwise the positioner might not be able to perform as it should.
For further information regarding the functioning, see chapter 2.
For further information regarding the location of the electrical openings on the positioner's case, see chapter 6.

5.8.1 INTRINSICALLY SAFE VERSION

The main electrical connections are:

- 4-20mA input signal (port J3).
- 4-20mA output signal (port J10).
- Digital input (port J6).
- Digital output (port J1).
- Position sensor remoted connection (port J4).
- Hart modem connection.
- High speed transfer data USB connection (port J7).
- Pilot Valve connection (J5), not available for customer.
- Sensor connection (P5), not available for customer.
- Display connection, not available for customer.

The connections may not be always used and/or available, as they are dependent upon the actual configuration selected. See further for additional information. The values indicated in the following pictures are the maximum allowable. Refer to the specific values indicated in each point when performing wiring operations.

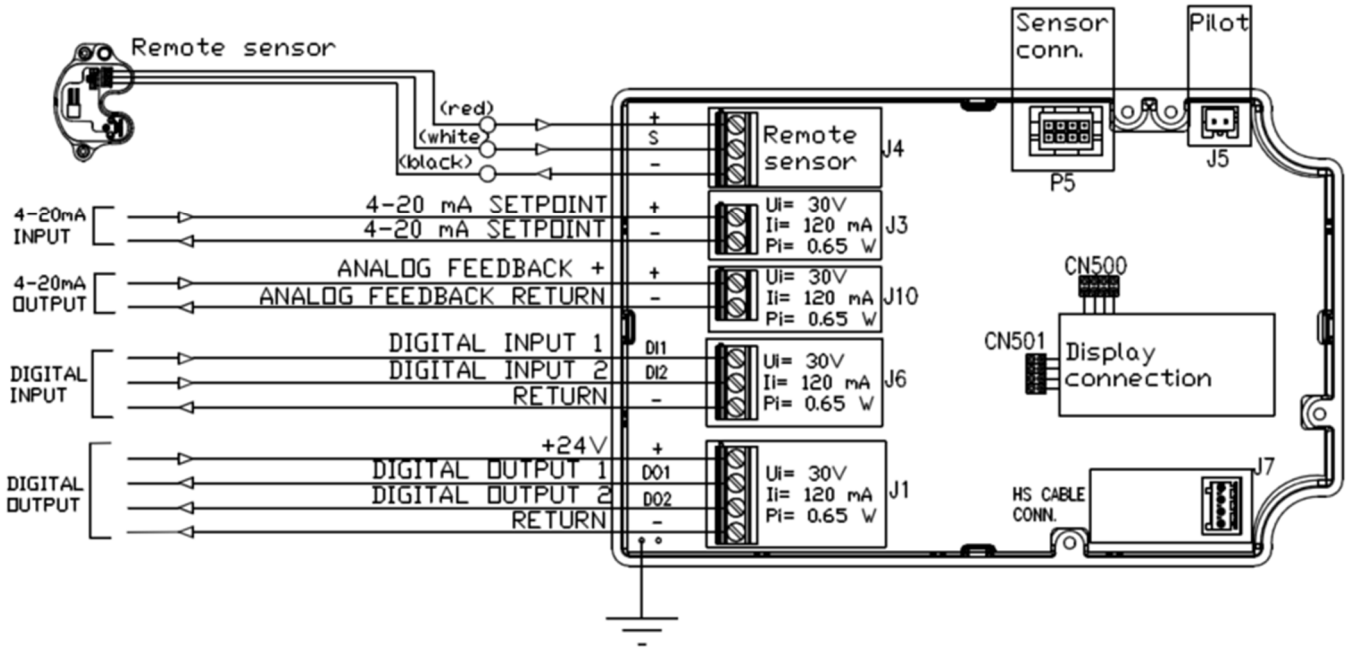

Figure 10

If a fail freeze version is selected, the additional electric parts must be wired by IMI STI. In any case, digital outputs will not be available to the end user.
Depending on the Fail Freeze selected:

- Two Wires Fail Freeze: available selecting "Two Wires Fail Freeze" models. Additional wiring is needed to connect the dedicated electronic board positioned inside the case to the piezo-valve that is positioned outside, according to the following drawings:

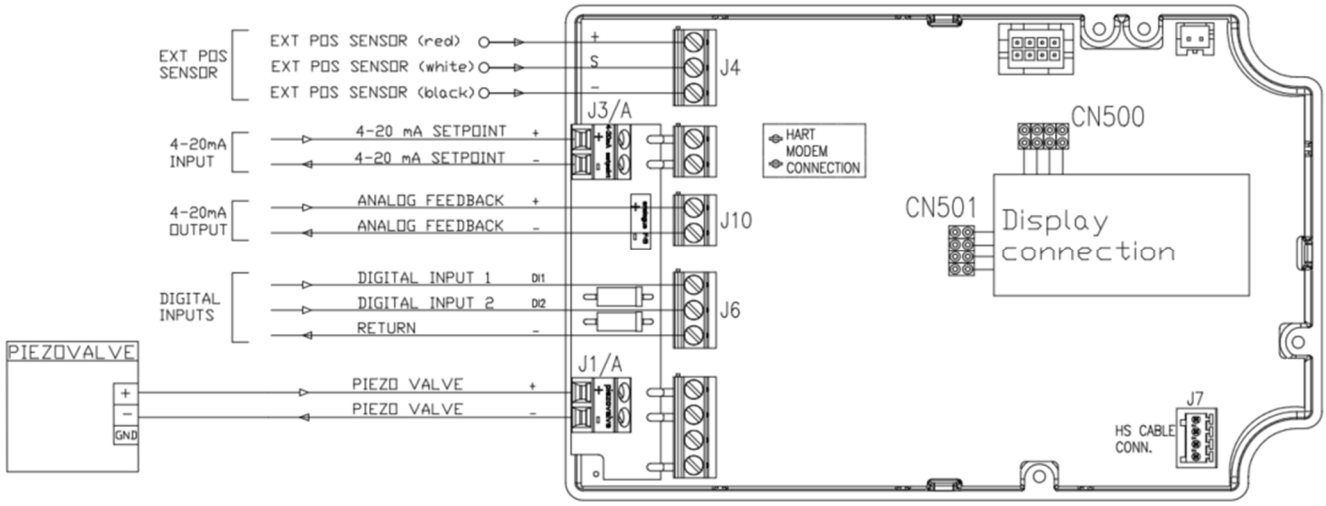

Figure 11

- Four wires Fail Freeze: available selecting a "Fail Safe" positioner, coupled with the +4WF option. Additional wiring is needed to transmit the signal from the positioner to the solenoid valve. The solenoid valve is powered from an external source. Digital outputs are not available:

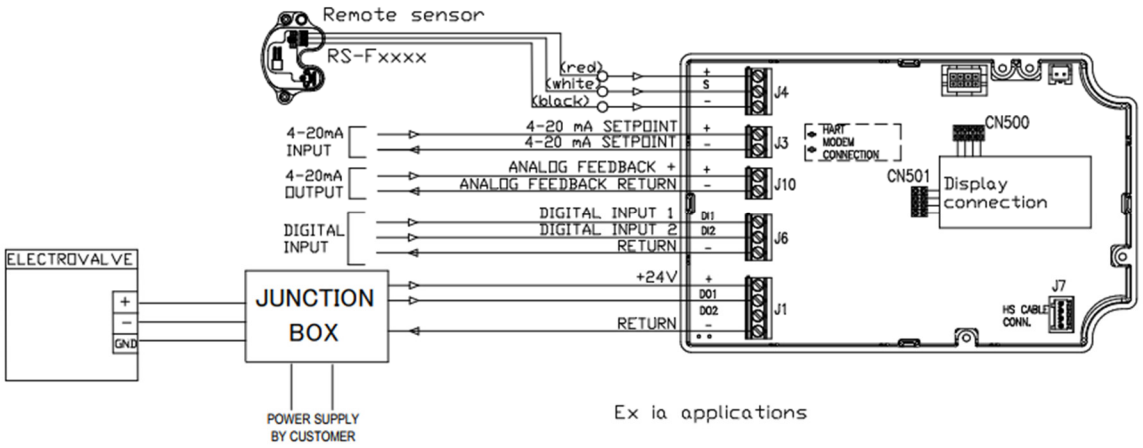

Figure 12

When performing wiring operations, strictly refer to the information hereafter described. Apply all safety measure necessary.
On all printed wiring boards a label to resume the connections needed is present.

In order to perform the connection, remove the upper lid by unscrewing the four screws with a 3 mm hex key. Upon removal, the terminals and the label become visible.
The wiring shall be performed according to the safety standards and the specifications of this manual.
The wires shall pass through the dedicated lateral openings. These openings have a ½" NPT thread. If needed, select the +M20 option to have the M20 adapters included.
Once the wiring has been performed, the lid shall be closed. To ensure complete tightness of the gasket and therefore to maintain the IP 66 rating, the screws shall be tightened in a cross pattern with a tightening torque of 3 Nm. If the display is present, make sure to tighten the screws before using the capacitive display.

During normal operation, do not use the positioner without main cover. Doing so will void the warranty as the positioner will no longer have the IP or Type rating.

1) 4-20 mA input signal (port J3)

Input port J3 should be connected to HART compliant 4-20 mA signal source. Input signal is used to:

- Provide power to the positioner.
- Inform the positioner about the 'Requested position'.

	Remember to proper select the intrinsically safe barrier, see positioner safety manual and positioner certificate.

	This is a current input. Connecting a voltage source could damage the positioner.

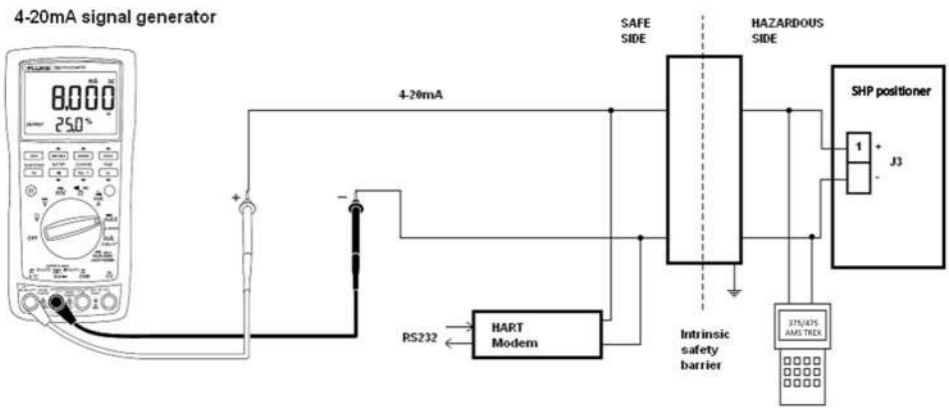

Figure 13

2) 4-20 mA output signal (port J10)

Output port J10 should be connected to 24V power source. Output signal is used to inform customer about the "Actual position" of the actuator/valve.

	Remember to proper select the intrinsically safe barrier, see positioner safety manual and positioner certificate.

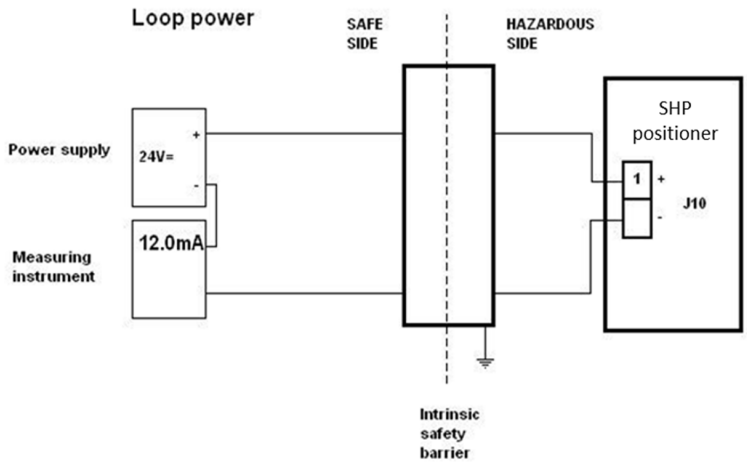

Figure 14

3) Digital input (port J6)

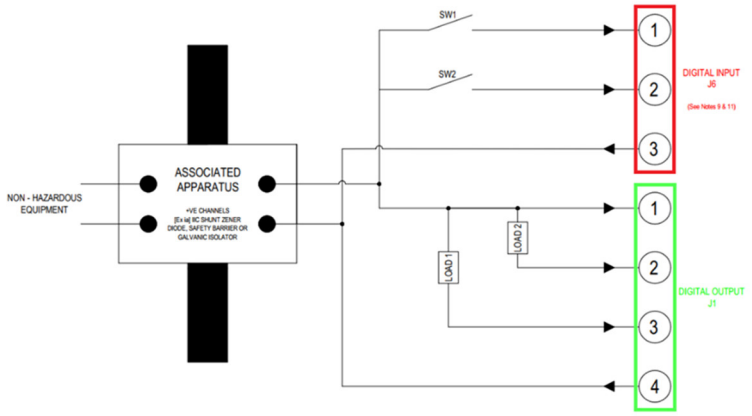

Figure 15

The digital inputs are isolated by an optocoupler. The input resistance value is 2200 ohms. Apply a 24Vdc signal between the digital input and the return signal to energize the input.

4) Digital output (port J1) (not available for fail freeze applications)

The digital outputs are isolated by an optocoupler. The output is made by a transistor with a series resistor of 1Kohm. When the output is energized the impedance is less than 4 KΩ, when de-energized the impedance is greater than 100 KΩ. The optocoupler requires an external 24Vdc power source to be energized via J1 pins 1 & 4.

5) Remoted contactless position sensor connection (port J4)

The Remote Sensor (+RS) configuration available with cable maximum 20 meters length, valid only for electrical wiring.
Pneumatic performances have to be checked for remoted applications.
Shield connection has to be connected as in the following figure.
To calibrate the remoted contactless position sensor, it is necessary to use the calibration pen that is available inside the enclosure. For further information regarding the calibration procedure, see Software Manual 4055, available on IMI STI's website.

This port is also used in case the "Potentiometer integrated" position sensor is selected. In this case, the wiring will be performed in house by IMI STI's dedicated personnel.

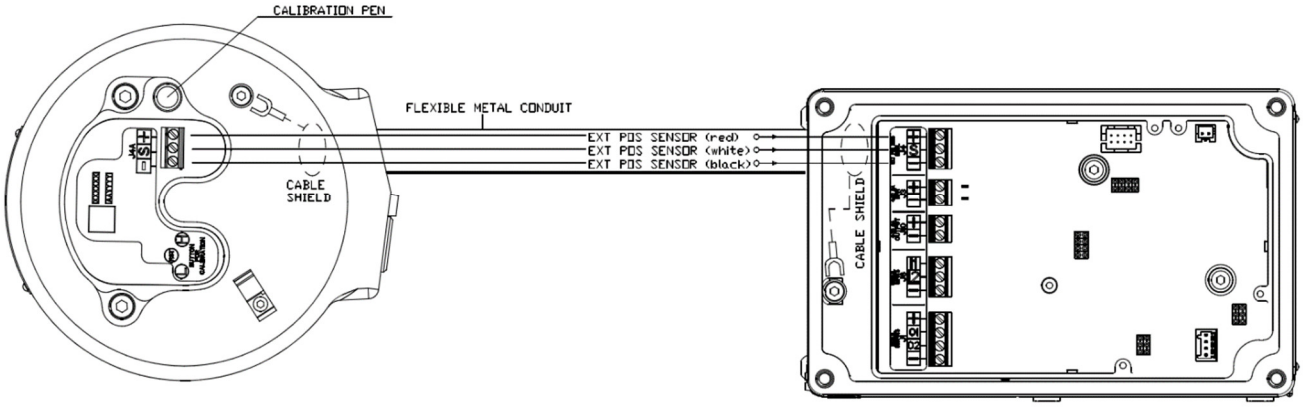

Figure 16

6) High speed transfer data USB connection (port J7)

Suitable for maintenance and commissioning. A dedicated interface cable is needed (option +CBL in the model selection).

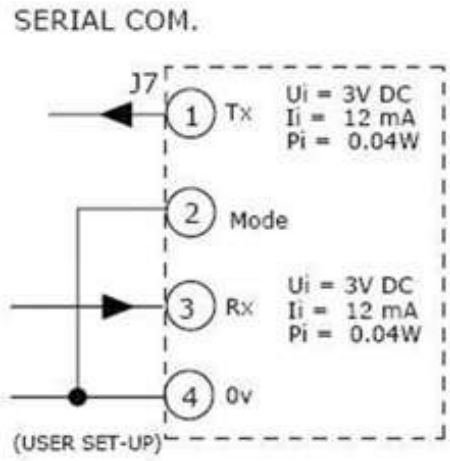

Figure 17

7) Other connections

Other connections, such as pilot valve, display and position sensor, are to be performed only by IMI STI's personnel. Do not make any change unless directly told to by IMI STI's technicians as it may render the positioner unusable.
Depending on the configuration chosen, not all connections will be employed.

5.8.2 EXPLOSION/FLAME PROOF VERSION

	With explosion proof version, the following connections are not available: • Digital input • Digital output For explosion/flame proof positioners, fail freeze version is not available. Fail freeze functionality can be obtained through an additional external electro-pneumatic circuit.

The main electrical connections are:

- 4-20mA input signal (using positioner Ex d barrier).
- 4-20mA output signal (using positioner Ex d barrier).
- Position sensor remoted connection (same as intrinsically safe version).
- Hart modem connection (same as intrinsically safe version).
- High speed transfer data USB connection (same as intrinsically safe version).
- Pilot Valve connection (J5), not available for customer.
- Sensor connection (P5), not available for customer.
- Display connection, not available for customer.

For additional information regarding the functioning of the Zener barrier, see annex A.
For the analog input/output, the 4-20 mA signal must pass through IMI STI's barrier, which is designed to ensure that the signal getting to the positioner is "Intrinsically safe". If other connections are needed, such as for Remote Sensor or Fail Freeze, the wiring must be performed according to this manual.
If the "Fail Freeze" functionality is required, the +4WF option must be chosen. "Two Wires Fail Freeze" positioners are not available for Ex d applications. For further information regarding this option, see section 2.
The electric connection must be performed only by IMI STI's technical personnel. Digital inputs and outputs will not be available for the end user:

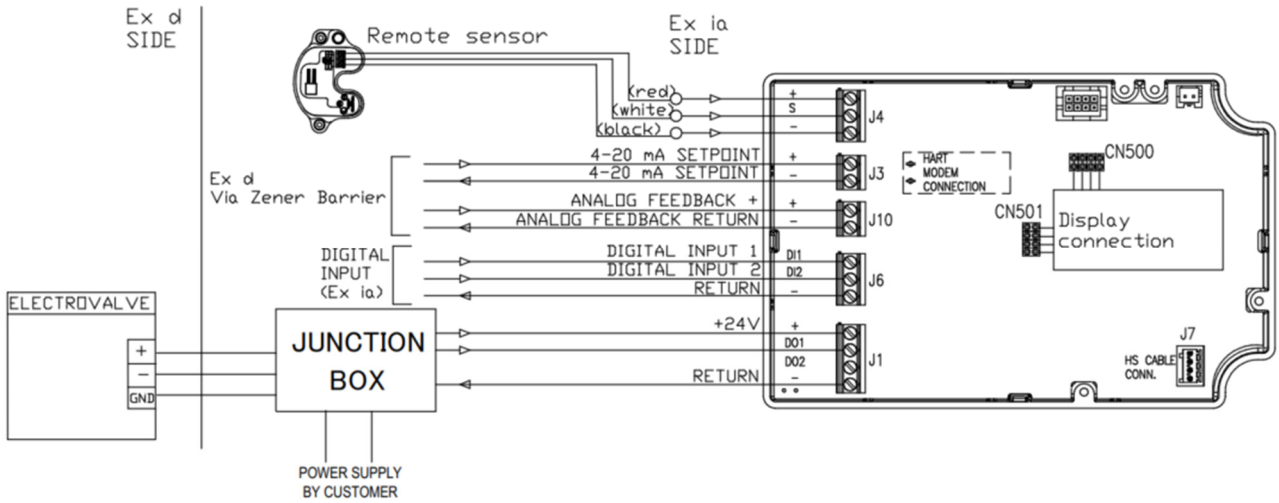

Figure 18

When performing wiring operations, strictly refer to the information hereafter described. Apply all safety measure necessary.
On all printed wiring boards a label to resume the connections needed is present.

⚠	Do not perform wiring operation when explosive atmosphere is present.

The values represented in the figures are the maximum allowable. Refer to the values indicated in each point during the setting up process.
"Ex d" certified positioner comes equipped with three metallic plugs on the electric inlets of the positioner. If the protected plugs are needed for additional connections (Digital Inputs and/or Outputs), the plugs can be removed. Make sure in these cases to use cable glands that are certified for the same area classification and temperature rating and that are certified to be able to maintain the same IP or Type rating as the positioner.

1) 4-20 mA input / output signal

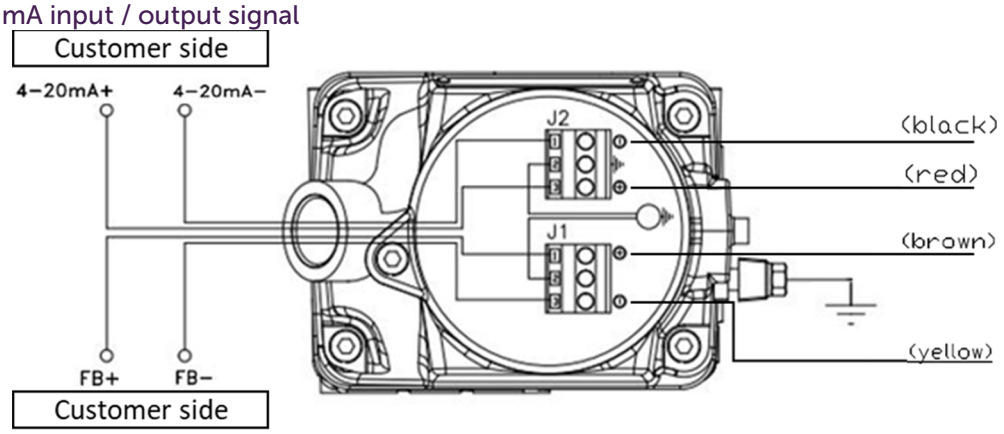

Figure 19

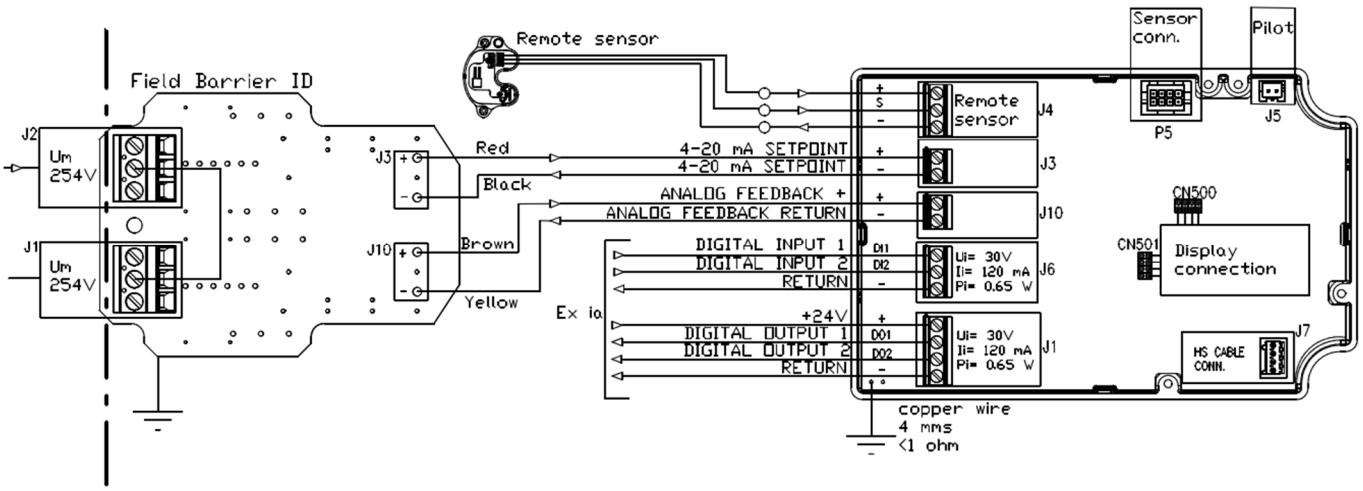

Figure 20

⚠	Remember to proper connect the Ex d barrier earthling port.

IMI STI's Field barrier model ID allows for direct connection to 4-20mA Input and Outputs thank to the dedicated cable entry. The maximum voltage allowable for both connectors is $U_m = 254\ V$. An higher voltage will cause the fuses to blow and render the barrier unusable and unrepairable.

2) Digital Inputs/Outputs

In the Explosion/Flame proof versions of the SHP positioner, the digital inputs and outputs are not available for the customer by using the attached Zener barrier.
In order to be used, additional barrier(s) must be used, as the digital inputs and outputs are Intrinsically Safe. For information regarding the connection, see the Intrinsically Safe section.
By wiring incorrectly, the SHP positioner may be rendered unusable and may cause harm and/or damages.

3) Remoted contactless position sensor connection (port J4)

This connection can be used as in the intrinsically safe version of the SHP positioner.

4) Other connections

Other connections, such as pilot valve, display and position sensor, are to be performed only by IMI STI's personnel. Do not make any change unless directly told to by IMI STI's technicians as it may render the positioner unusable.
Depending on the configuration chosen, not all connections will be needed.

5.9 EARTHING CONNECTIONS

5.9.1 INTRINSICALLY SAFE VERSIONS

The positioner must be connected to earth before turning it on. Depending on the material chosen, the earth connector changes position:

- Aluminum version:

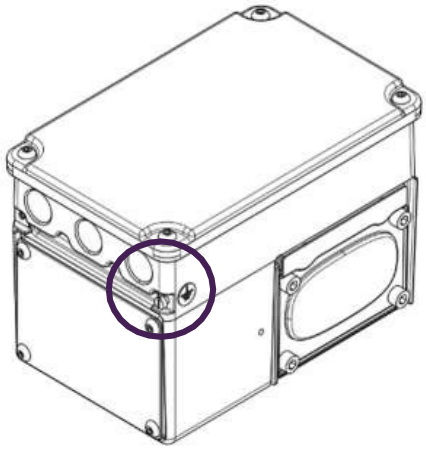

Figure 21

- Stainless steel version:

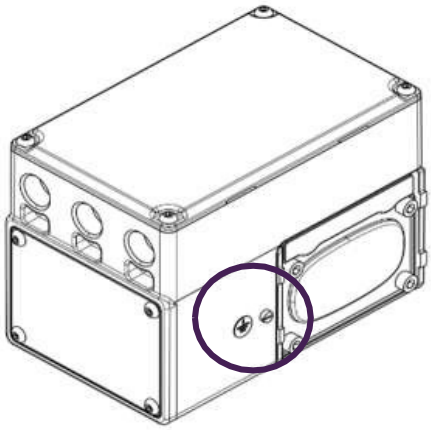

Figure 22

5.9.2 EXPLOSION/FLAME PROOF VERSION

The Zener barrier must be connected to the earth path in order to work properly according to IECEx BAS 11.0080X "conditions of use".

⚠	**At least one of the two options must be used, earth connection is mandatory.**

Earth connection can be performed in two ways:

1. Using earth wires coming from the signal source (Control Room, DCS, ...). This ensures that the signal voltage is referred to the same earth voltage potential as the control room. To use this method, disconnect the pre-wired yellow and green wires from the internal connectors and connect the wires coming from the control room to the pins J1/2 and J2/2.
2. Using a local earth connection. In this case there is a residual risk of "misalignment" of the two earthing points and the internal voltage limiters can be activated causing the fuses to blow. If this happens, the barrier is rendered unusable and unrepairable, and it must be substituted. To use this method make sure that the yellow and green wires are properly connected to the connectors pins J1/2 and J2/2). Then, use the external earth connector. See figure 23 and annex A.

New barriers comes with earth connection prearranged according to method 2.

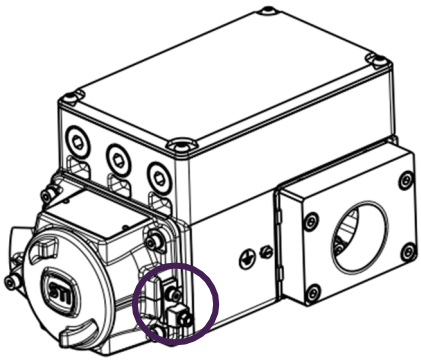

Figure 23

	See below to understand how to manage input impedance in case your DCS haslimited voltage output.

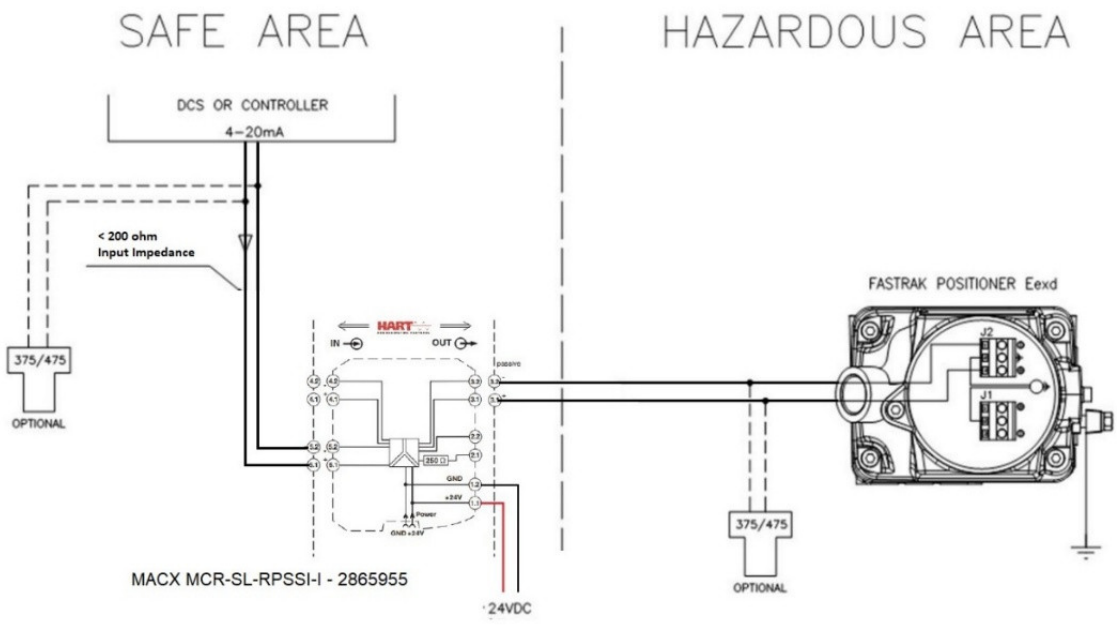

Figure 24

For further details regarding the Zener barrier, see Annex A of this manual.

5.10 DISASSEMBLING

	Before starting any disassembly operations, it is mandatory to disconnect the electric power/signal and discharge air. Be sure that no pressurized fluid could be present inside the product, fittings, tubing. The staff must be qualified for the required operation.

6 OPERATION AND USE

⚠	It is severely forbidden to use the product for purpose or application other than those for which it was designed and here specified. The product contains fluid under pressure. Pay attention using it.

6.1 OPERATION DESCRIPTION

Use the positioner considering technical data and all the information reported in this manual.

6.2 PRODUCT DESCRIPTION

In the following paragraphs, there will be information regarding dimensions, mechanical interfaces, pneumatic and electrical connections, related to the main models available. The actual configuration and dimensions may change depending on the actual model, mainly depending on the "Exhaust Port" and the "Position Sensor".

6.2.1 INTRINSICALLY SAFE - ALUMINUM VERSION

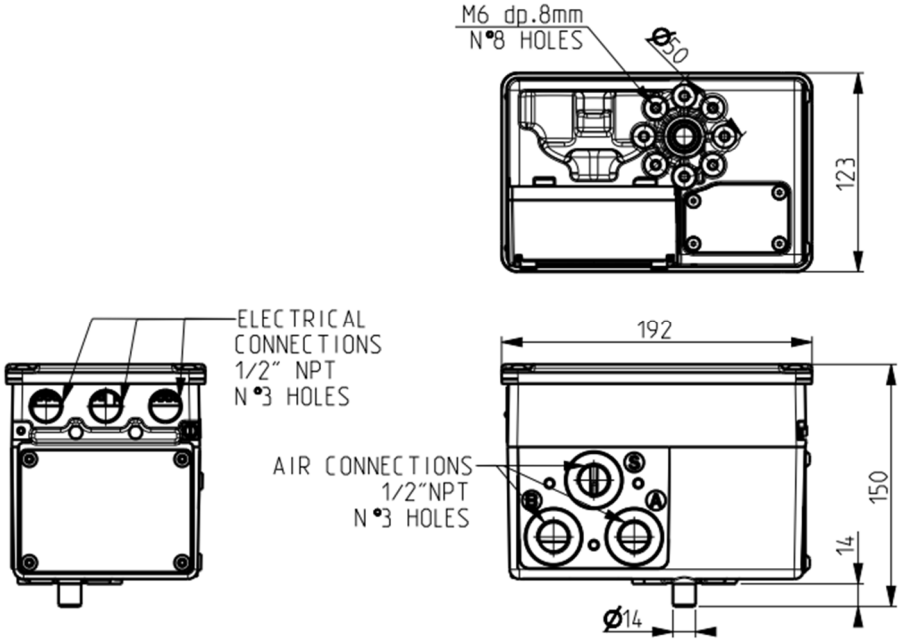

Figure 25

6.2.2 INTRINSICALLY SAFE - STAINLESS STEEL VERSION

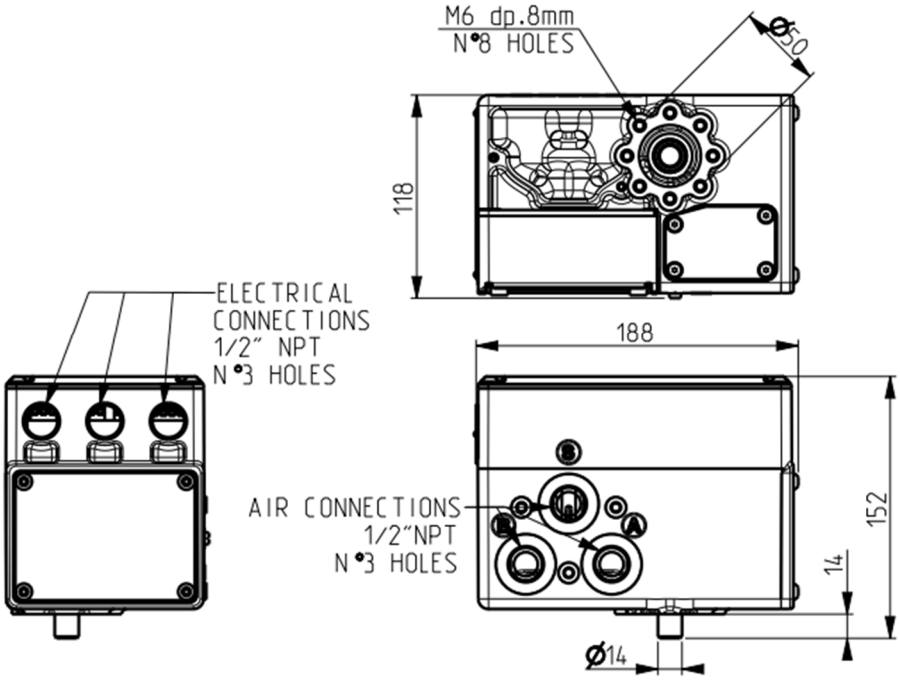

Figure 26

6.2.3 EXPLOSION/FLAME PROOF - ALUMINUM VERSION

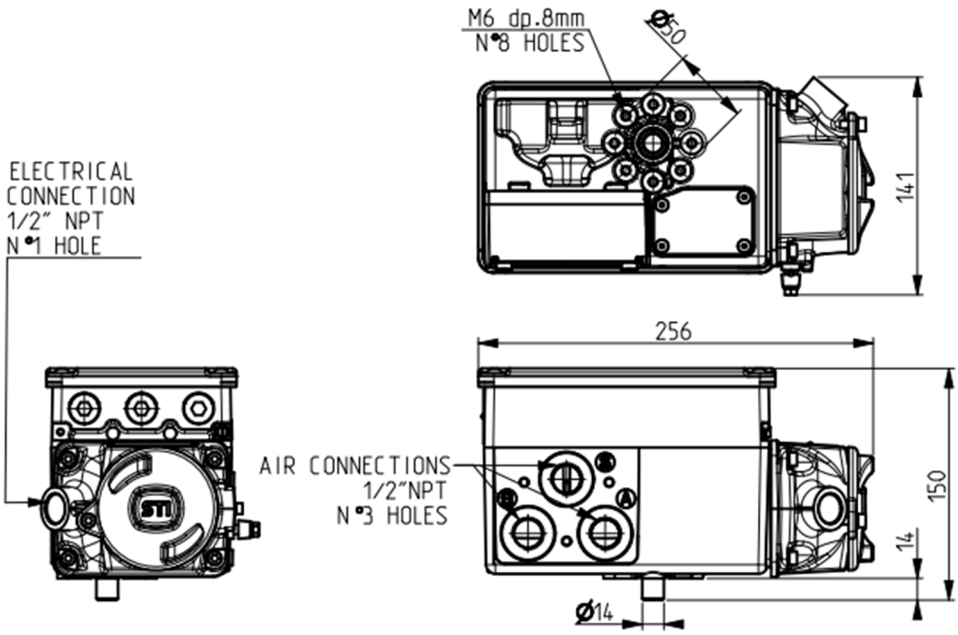

Figure 27

The electrical connection orientation can be rotated by 180°. See Annex A for further details.

6.2.4 EXPLOSION/FLAME PROOF - STAINLESS STEELS VERSION

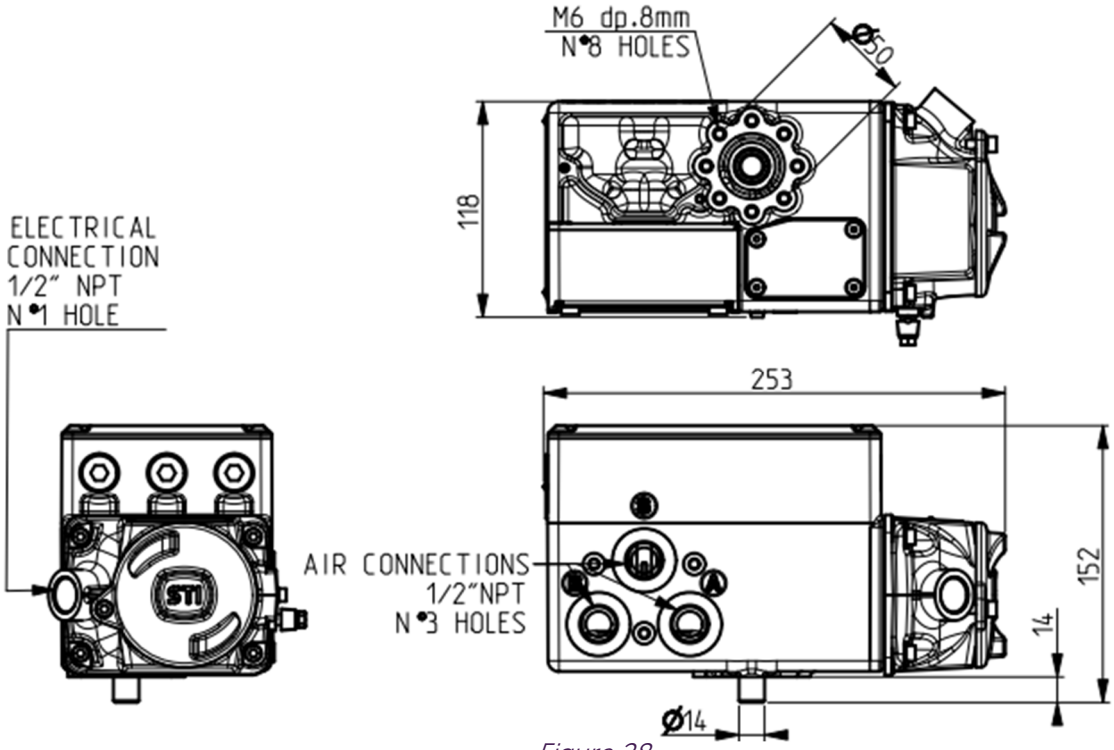

Figure 28

The electrical connection orientation can be rotated by 180°. See Annex A for further details.

6.2.5 COLLECTED EXHAUST/CLOSED LOOP

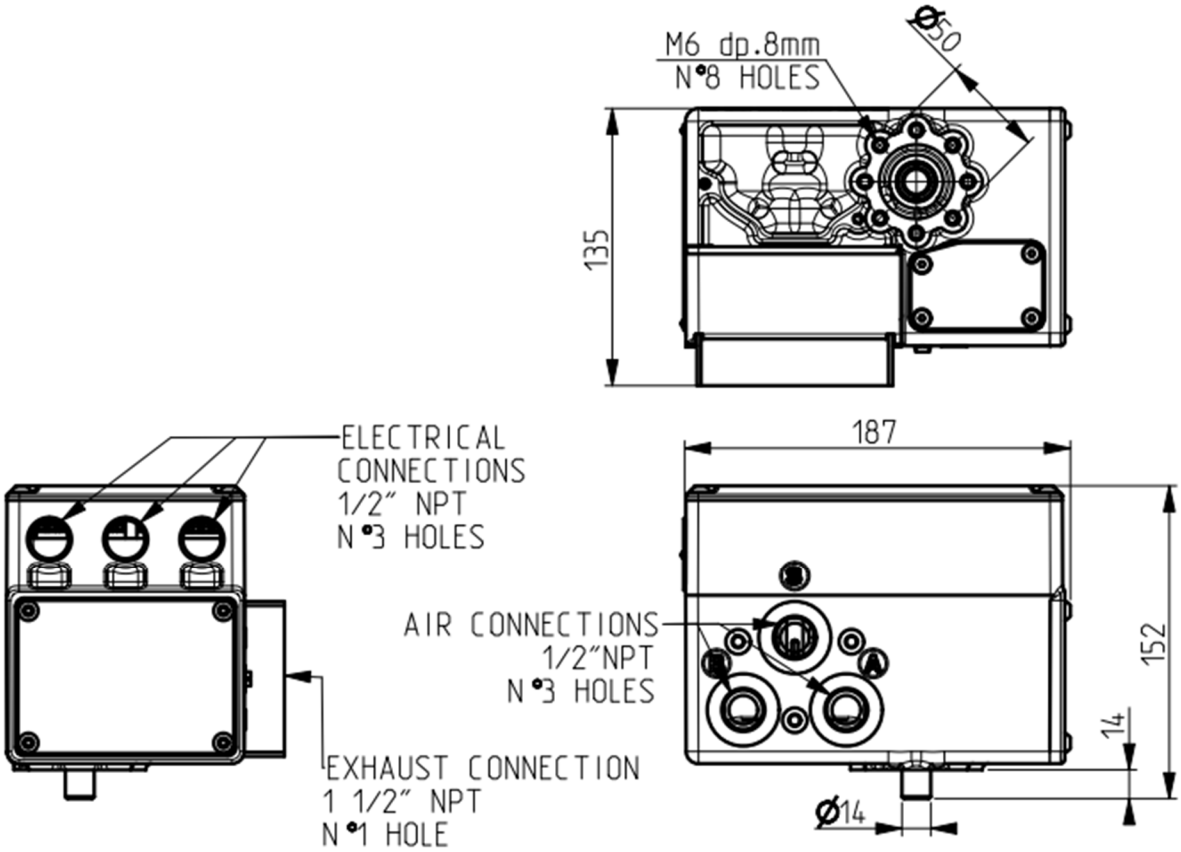

Figure 29

6.2.6 REMOTE SENSOR - ALUMINIUM VERSION

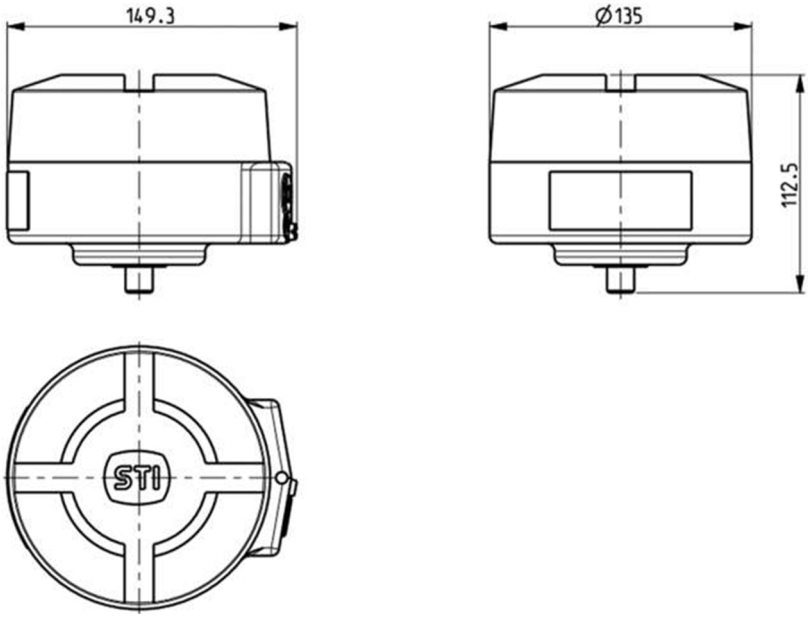

Figure 30

6.2.7 REMOTE SENSOR - STAINLESS STEEL VERSION

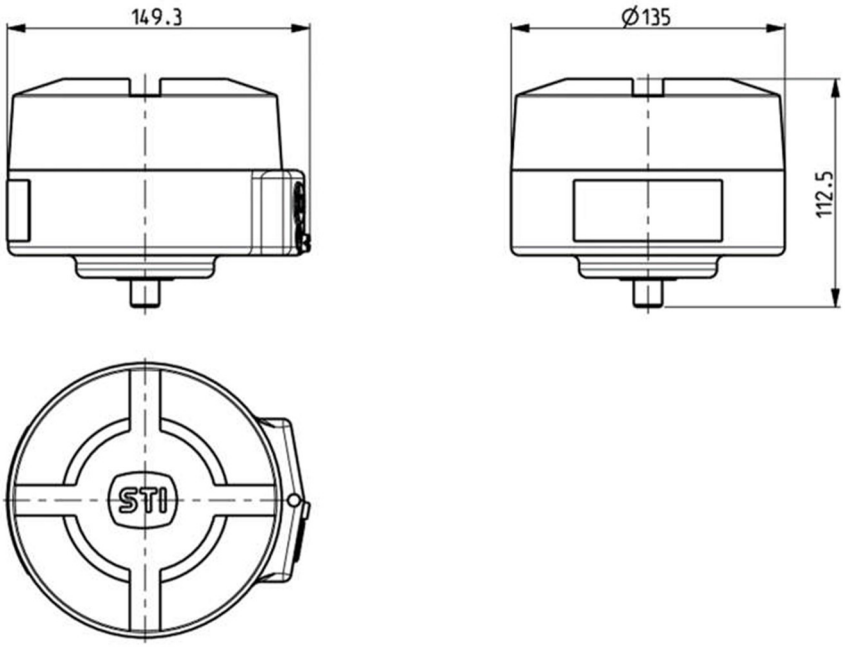

Figure 31

6.3 INTENDED USE

This product is an electro-pneumatic positioner for pneumatic actuators.

IMI STI will not be liable for any possible damage or physical injury resulting from use in other than the designated applications or by lack of care during installation, operation, adjustment, or maintenance. Such risks lie entirely with the user.
Considering that IMI STI has no direct control over applications, operation or maintenance conditions, it is the operator's responsibility to comply with all applicable safety rules: it is the sole responsibility of the operator to ensure that the local health and safety regulations are adhered to.
Depending on the specific working conditions, additional precautions may be required. Please inform IMI STI if you face unsafe situations not described in this Instruction Manual.

6.4 REASONABLY FORSESEEABLE MISUSE

A short list of reasonably foreseeable misuse:

- Installation in ambient with not planned conditions (i.e. climatic conditions different from the specified conditions).
- Incorrect fluid used inside the product.
- Supply pressure greater than maximum operating pressure.
- Input voltage greater than maximum allowable value.

6.5 OPERATING LIMITS AND REQUIREMENTS

The product label and/or this manual (see technical data) indicate the main operating conditions of this product.
Operating conditions and limits must be followed for every application, as an improper use may cause damages and/or harm.

6.5.1 CABLE GLANDS AND PLUGS

When selecting cable glands take into consideration:

- The type of protection of the positioner.
- The IP or Type rating of the positioner.
- The temperature class and operating temperature.

Cable glands must be suitable and approved for the application in order to be used.
Unless required by the customer, the positioner will be shipped with plastic plugs that are not suitable for use, but that are solely necessary to avoid entry of dust or foreign particles during shipping. The customer is responsible for substituting them with proper plugs, that are rated for the area classification where the positioner will be installed and that are capable of maintaining the IP or Type rating of the positioner.
This is valid for both installation and storage of the positioner. Inability of the customer to satisfy this requirement will cause the positioner to lose the IP or Type rating, possibly invalidating the certification and therefore may cause damages or harm during use.

6.5.2 PNEUMATIC FITTINGS AND TUBING

Pneumatic fittings must be selected according to the IP or Type rating of the positioner to ensure the proper protection level.
Fitting must also be rated for the same area classification and temperature class as the positioner, as otherwise the certification of the positioner will no longer be valid.
To achieve peak performance, it is recommended that pneumatic tubes not be flexible and pneumatic fitting not be of push-to-connect or quick couplers.
Furthermore, the size of the fitting directly influences the performance of the positioner, therefore it is extremely important to select the proper size of fitting depending on the model selected. For the high flow version of the positioner, at least ½" NPT fittings and tubes are required for full performance. For the standard flow version, at least ¼" NPT fitting and tubes are required. If smaller fittings are used, the performance will worsen, negatively influencing the ability of the actuator to achieve optimal actuating time.
When studying the pneumatic diagram, make sure to select accessories that are capable of sustaining the SHP positioner's flow rate.
For further information, see chapter 5.7 of this manual.

6.5.3 CERTIFICATION

The execution chosen must be right for the type of protection needed for the application. An improper selection could cause damage and/or harm.
Depending on the certification, all limitations and measures must be followed.
The maximum operating temperature must not exceed the temperature reported on this manual and on the label attached to the positioner.
If any additional measure is signaled on the positioner, it must be followed properly.
Installation, commissioning and maintenance of devices within explosive atmosphere must be carried out only by appropriately trained personnel. The operator must follow the applicable national or internation regulations.
Repairs must be carried out only by IMI STI's technical personnel. No repair shall be performed by the user as it may cause damage and/or harm and will void the warranty.
The label present on the positioner when received must be coincident with the nameplate detailed in the dedicated manual, depending on the exact model. If for any reason this is not true, immediately contact IMI STI.

6.5.4 ACTUATOR COMPATIBILITY

The SHP positioner can be employed for both linear and rotary actuators. The higher the angle of reading , the better the performances. The contactless magnetic sensor is able to read the position on 360°.
The maximum working angle is 120°. For higher working angles, contact IMI STI. The minimum reading angle is 30° to maintain a proper resolution level. Contact IMI STI for further information regarding performances.
There are no limits in linear strokes. For stroke lower than 20 mm, a special linkage system is needed. Contact IMI STI for further information. Different linkage kits are available for strokes higher than 20 mm.
Mounting kits, lever systems or any other linkage system between the actuator and the SHP positioner must be studied considering these details.

6.6 RESIDUAL RISKS

A short list of possible risks:

- Risk due to movements of loads during mounting phase.
- Crushing during assemblage servicing.
- Extreme high or low surface temperature, as consequence of ambient temperature, must be considered a risk of personal injury in case of contact.
- Hazardous fluid emission (i.e. when natural gas is used as fluid under pressure).

7 INSTRUCTION FOR THE OPERATOR

During the start-up of the product, proceed as follows:

- Check that the pressure and quality of the air supply (filtering degree, dehydration) are as prescribed.
- Check that there are not leaks in the pneumatic connections. If necessary, tighten the fittings.
- Set the product according to the schematic diagram.

7.1 ELECTROMAGNETIC INTERFERENCE

During the start-up of the product, proceed as follows:

- Do not lay signal lines close to power lines. Power lines produce interference in their near vicinity, which may affect measured value transmission on the signal line.
- When changing electrical connections inside the positioner housing, observe ESD handling precautions.
- The use of a conductive, earthed, wrist strap is recommended.
- It is recommended that lid is rest closed in normal operation.

	Always observe the specifications and special requirements for your positioner stipulated in the applicable certificate.

7.2 PNEUMATIC SAFETY

During the start-up of the product, proceed as follows:

- Observe the accident prevention rules of the H&S organizations.
- Observe the safety instructions for the pneumatic actuator used.
- Before connecting the air pipes blow them out to remove dust, splinters, and other particles.

	Take suitable precautions to ensure that even in case of malfunctions the positioner's maximum admissible operating pressure is not exceeded. Otherwise, positioner and/or actuator may be damaged.

7.3 ELECTRICAL SAFETY

During the start-up of the product, proceed as follows:

- Observe the accident prevention rules of the H&S organizations.
- Observe the safety instructions for the pneumatic actuator used.
- Observe the standards and safety regulations for the installation and operation of electrical systems.
- Observe all electrical specifications in these operating instructions or in the drawing.

	For electrical installation of explosion-protected devices, observe all standards, regulations and directives governing explosion protection and applicable for the construction and use of explosion-protected systems, the directives for explosion protection and the special requirements and specifications for your devices. **Make sure that the positioner is:** • **used in situations that comply with the certification conditions stated in this handbook.** • **maintained only by qualified personnel with adequate training on hazardous area instrumentation.** **This product is not intended for use in life support systems.** **The use of a ground strap between the positioner housing and a suitable earthed point is necessary.** **The supply circuit must be protected to prevent current exceeding the fixed limit.** **The equipment must be provided with cable entries and filler plugs certifiedaccording to the required certification.**

8 MAINTENANCE

8.1 PERIODIC INSPECTIONS

⚠	Consider that a build-up of dust or dirt on the product can inhibit cooling and contribute to increase surface temperature. The user should plan and provide for a periodic cleaning and maintenance program that will maintain the external surface of the positioner free from excessive layer of dust. Operation and maintenance shall be carried out by skilled staff.

Product disassembling and reassembling shall be carried out only by IMI STI authorized operators.

8.2 SPECIAL MAINTENANCE

The product does not need special maintenance considering standard applications; if special maintenance is required, send back the device to IMI STI.
Product disassembling and reassembling shall be carried out only by IMI STI authorized operators.
Always avoid unpredictable movement of the actuator: before making changes to the positioner, make sure that the supply pressure and electrical power are isolated from the positioner.

8.3 REPAIRS

When needed, send back the device to IMI STI for any repairing.
Product disassembling and reassembling shall be carried out only by IMI STI authorized operators.

9 TROUBLESHOOTING

If the positioner does not behave like it is supposed to, follow this table to understand what is the first measure to take. If the first step does not work, call IMI STI for assistance.

Event	Possible cause	Remedy
Does not work properly	Incorrect setting parameters.	Launch self-tuning via software. See dedicated software manual.
	Incorrect mounting of magnet holder.	Contact IMI STI S.r.l.
	Low supply pressure.	Adjust supply pressure.
	Cables not connected correctly.	Check the connection is in accord with this manual.
	Defective internal component (enclosure, springs, spool, etc...).	Contact IMI STI S.r.l.
	Wrong dimension of pneumatic fittings and/or tubes.	Change pneumatic fittings and/or tubes in accord with this manual.
Leakages on pneumatic circuits	Deterioration and/or damage to gasket and/or loosed fittings.	Contact IMI STI S.r.l.
	Damage of fittings.	Change pneumatic fittings.
Barrier not working	Cables not connected correctly.	Check the connection is in accord with this manual.
	Fuses have blown.	Barrier must be substituted. Contact IMI STI S.r.l.
Display not working	Cables not connected correctly.	Check the connection is in accord with this manual.
	Ambient temperature is too low.	See section 2.2 of this manual.

When contacting IMI STI for support, please have ready the 7-digits Serial Number reported on the label of the positioner, as it will be necessary for our technicians to identify all components within the positioner.

10 DECOMMISIONING

Subject	Hazardous	Recyclable	Disposal
Metals	No	Yes	Use licensed recyclers
Plastics	No	Yes	Use licensed recyclers
Rubbers	Yes	No	May require special treatment before disposal, use specialist waste disposal companies
Greases	Yes	No	May require special treatment before disposal, use specialist waste disposal companies
Electronic boards	Yes	No	May require special treatment before disposal, use specialist waste disposal companies
Electric cables	No	Yes	Use licensed recyclers

	Before starting any disassembly operations, it is mandatory to disconnect the pneumaticand electric power, and exhaust the pressure inside the positioner.

	The product decommissioning shall be made by specialized operators.Check local authority regulation before disposal.

ANNEX A – FIELD BARRIER MODEL ID

A.1 GENERAL PRESCRIPTIONS

Field barrier model ID was designed and has to be used only mounted on STI positioned series SHP in order to allow its use in explosion hazard risk classified area with protection method "Ex d".

A.1.1 MANUFACTURER'S IDENTIFICATION DATA

Every field barrier model ID is provided with an additional name plate with its serial number.
The certificate covers the SHP positioner coupled with the barrier. When sold with the SHP positioner, the barrier cannot be used with other positioners. The barrier will come labeled with information regarding the barrier certificate, area classification, temperature rating and model. The information regarding temperature and material recorded onto the label of the barrier must coincide with the ones reported on the positioner. If not, contact IMI STI at sti.support@imi-critical.com.

	• Do not remove it and/or replace it with other name plates. • Do not modify the information reported on it. • Follow any indication written on it.

The explosion proof version the equipment is designed to operate in potentially explosive atmosphere classified as:

II 2(1)G Ex d [ia Ga] IIC T5/T6 Gb

Equipment group II surface industry, category 2 for use in zone 1 with explosive atmospheres caused by gases, vapors or mists. In conformity to types of protection standardized EN 60079-0 with flameproof enclosure EN 60079-1. The maximum surface temperature will not exceed 100°C in an 80°C ambient and is suitable where the hazardous gas has a Temperature Class T5.

A.1.2 GENERAL SAFETY INSTRUCTIONS

Before any operation is performed:

- Operators shall follow instructions of this manual and adopt the safety precautions by the country where the product is installed.
- Operation and maintenance shall be carried out only by skilled staff.
- It is strictly forbidden to customers (except for STI duly authorized staff) to modify the characteristics of field barrier.
- The apparatus has to be operated according to the appropriate data in the data sheet and in this manual.
- When mounting in the hazardous area, the explosion proof housing must be provided with cables, cable entries and filler plugs which are at least certified according to directive 94/9/CE, EN 60079-0, EN 60079-1 and suitable for the temperature rating.

	The electrical connections must be done according to the diagram, label and 94/9/EC directive (also for used fitting, cable and cable gland).

A.1.3 MAINTENANCE

No changes can be made to the apparatus, which is operated in hazardous area. Disconnect supply circuit before enclosure opening. Must be done by qualified person who is trained to operate into potentially explosive atmosphere. Tools and equipment must be suitable for potentially explosive atmosphere where the actuator is installed. Cleaning must be done with a humid cloth. Greases must be used according to the manufacturer's instructions, however their flammability point must be > 140°C.

A.2 FIELD BARRIER

A.2.1 GENERAL FEATURES

The ID model field barrier is suitable for operating smart positioners with HART® communication. Upstream connection and direct attachment to intrinsically safe field devices enable the intrinsically safe circuits of these devices to be connected with the circuits of upstream input and output units that are not intrinsically safe. In this way, the advantages of intrinsic safety, such as commissioning and operation when connected to a voltage source, are still in effect within the hazardous area. The connecting cable of the non-intrinsically safe circuits introduced in the housing of the field barrier either via pipeline systems or via design certified cable or conduit entries or armored cable. An ½" NPT threaded opening allows for a direct connection through the cable entry of the field devices. If needed, the barrier can come equipped with an M20 adapter.

A.2.2 TECHNICAL FEATURES

HARDWARE	DESCRIPTION
HOUSING	Aluminum A356 T6
	Stainless Steel A351 CF8M
ELECTRICAL CONNECTIONS	1 x ½" NPT female (Ex d)
ELECTRICAL	DESCRIPTION
Technical Features	• Nominal voltage : $24\ V$ • Ambient Temperature : $-40°C\ \div\ +80°C\ /\ +60°C$
Safety Parameters	• U_m: $254\ V$ • U_O: $27.45\ V$ • I_o: $87\ mA$ • P_o: $0.597\ W$ • C_O: $86\ \mu F$ • L_O: $4.2\ mH$

A.2.3 INSTALLATION

The device has to be used mounted on the STI positioner model SHP housing.

⚠	• Cable entry may exceed 70°C. • Do not open when a flammable atmosphere may be present.

Connect the signal wires to the terminals J2/1 (-) and J2/3 (+) and, if needed, the analog feedback wires to the terminals J1/3 (-) and J1/1 (+). On the connectors, a label is attached to resume the connection:

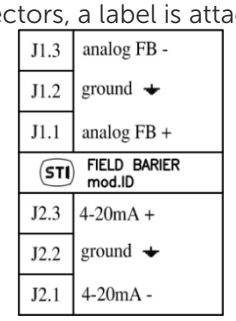

Figure 32

To perform the connections, the upper lid shall be taken out. To do so, unscrew the screw on the lid and then the whole lid will be able to be unscrewed. The terminals and the label will become visible.

The connections must be performed according to this manual and to any safety requirement applicable. The wires must pass through the dedicated opening in the enclosure.
Once the connections have been made, the lid of the enclosure of the barrier has to be tightened until no gaps remain. Once this position is reached, the screw on the lid must be tightened with a 4 mm hex key to avoid unwanted unscrewing of the lid during operation.

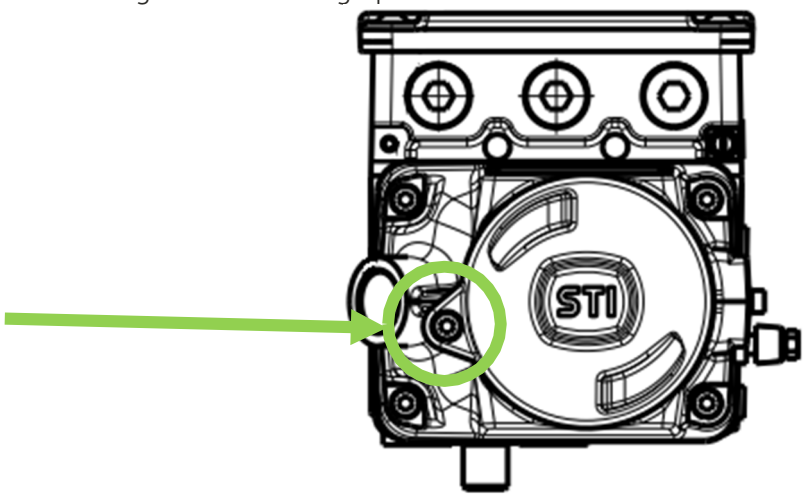

Figure 33

Not performing this operation correctly may lead to a dangerous and harmful behavior of the barrier, as the explosive atmosphere may come into contact with the electronic circuit.

The Zener barrier must be connected to the earth path in order to work properly. For further details regarding earthing during operation, see section 5.

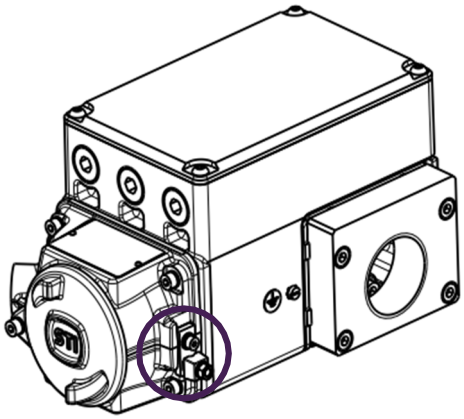

Figure 34

The position of the earth connector is the same for each different configuration. The connector itself may change in shape and/or material. The indications mentioned above are still valid.
For additional information regarding grounding connections, see chapter 5.8.2.

⚠	• Minimum earth cable's section is 4mm². • Maximum resistance is 1 ohm.

The field barrier type ID external earth terminal must be provided with a high integrity insulated earth connection equivalent to a 4 mm² copper conductor, which has a resistance of less than 1 ohm to the supply start point and which must not rely on any plug and socket connections. The metallic enclosure is directly connected to earth and therefore the electrical circuits are not capable of withstanding the 500V insulation to earth or frame requirement of EN60079-11. This must be taken into account in any installation. The output wires red, black, brown and yellow must be terminated within an enclosure which provides a degree of protection at least IP20 (if mounted on board of a SHP positioner this is compliant). The segregation between the two identical sections must be maintained as two separate intrinsically safe circuits unless the combination of the two sections has been considered.

The ID barrier can be installed with the electrical connection for the customer oriented on either two horizontal direction.
If the orientation is not appropriate for the installation, the barrier can be uninstalled and rotated.
When doing so, pay attention to:

- Not damage the wires, as it may lead to damage/harm.
- Not lose the gasket, as it may impair the IP or Type rating of the enclosure.
- Follow proper wiring procedures and the instructions given in section 5.9.2 of this manual.

A.2.4 PRODUCT DESCRIPTION

The Field Barrier prevents the transfer of unacceptably high energy from the safe area into the hazardous area. The Zener diodes in the Field Barrier are connected in the reverse direction. The breakdown voltage of the diodes is not exceeded in normal operation. If this voltage is exceeded, due to a fault in the safe area, the diodes start to conduct, causing the fuse to blow. If this happens, the barrier must be substituted as it is rendered unusable and irreparable. The Field Barrier has a positive polarity, i.e. the anodes of the Zener diodes are grounded. The diodes prevent a current to flow into the hazardous area. Application examples can be found in the SHP positioner.

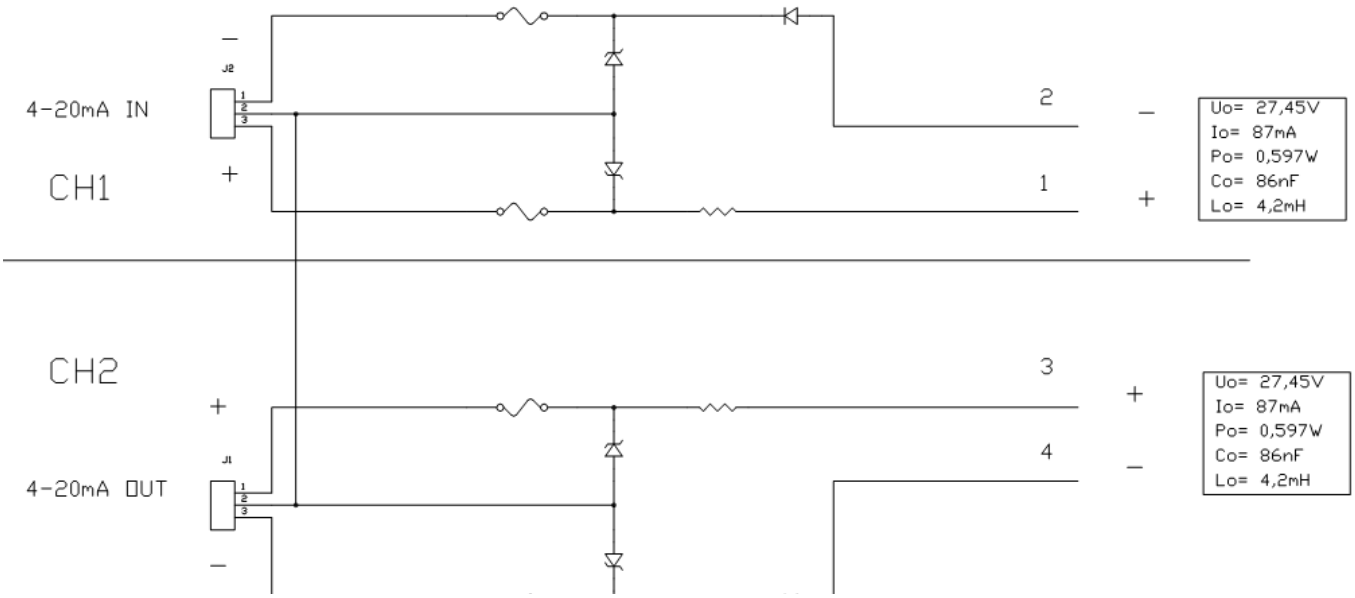

Figure 35

IMI STI - Headquarters
Via Dei Caravaggi 15
24040 Levate (BG) Italy

Tel. +39 035 2928.2
Fax +39 035 2928.247

IMI Critical Engineering
Lakeside, Solihull Parkway
Birmingham Business Park
Birmingham B37 7XZ
United Kingdom

Tel. +44 (0)121 717 3700
Fax +44 (0)121 717 3701

www.stiactuation.com
www.imi-critical.com
imisti.sales@imicritical.com