3 YEAR WARRANTY

LIGHT DUTY

WORKLAMPS

CE R10 IP67 RoHS

EW2481
Round LED

These compact round worklamps offer the latest technology and very brightest white light for your application. Available in spot and flood beam patterns these unobtrusive worklamps provide extremely high light intensity despite their small size. These LED models offer over 80,000 hours of maintenance free life expectancy coupled with extremely low amp draw.

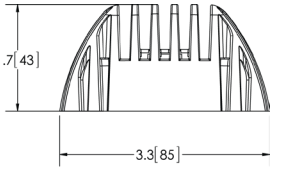

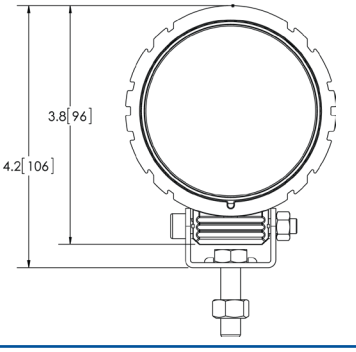

Models

PART NO.	VOLTAGE	AMPS	RAW LUMENS	TYPE
EW2481	12-24	1.2	800	Flood

Features and Benefits

- Five 3-watt LEDs
- 12-24 VDC
- Compact design
- Aluminum heatsink housing
- Polycarbonate lens
- Steel mounting bracket

Counter Pack

- Counterpack automatic (when you order quantities of 6)

Beam Pattern

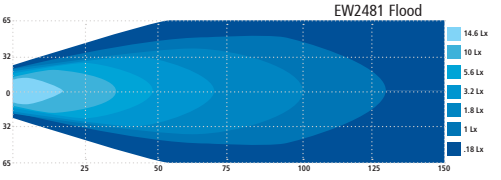

T 800-635-5900 | orders@eccogroup.com