# ADAPT STOOL

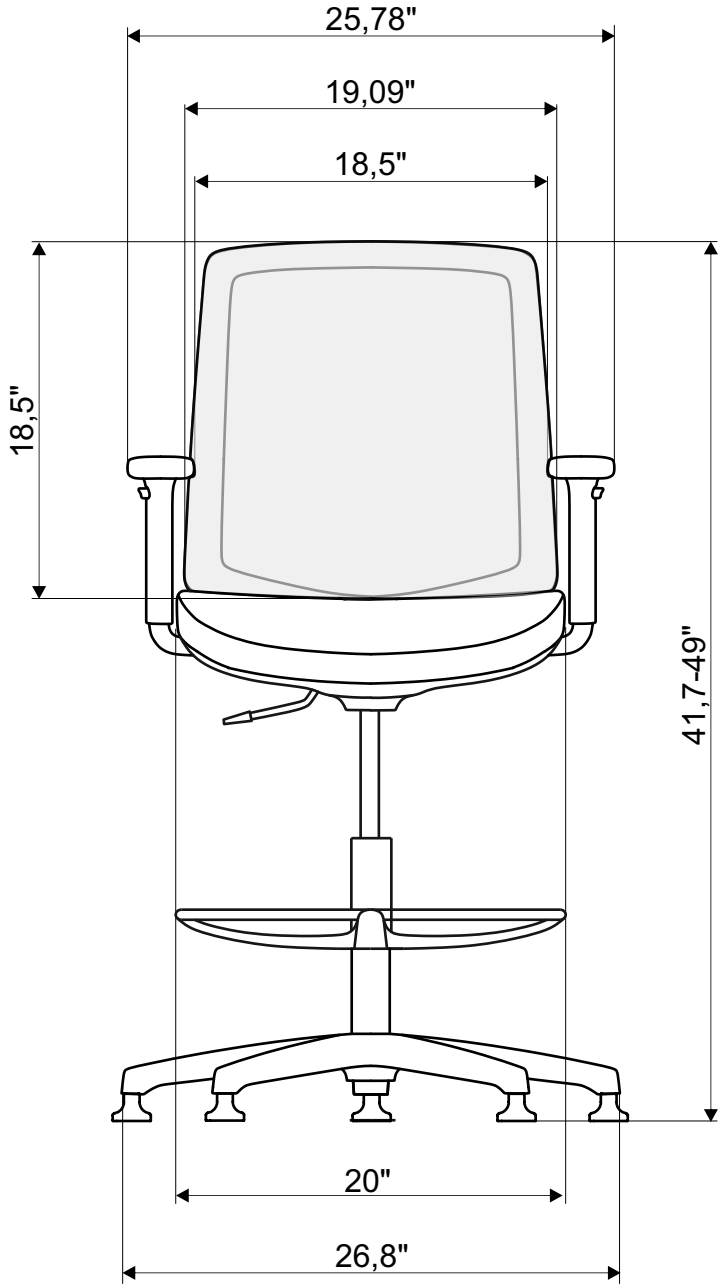


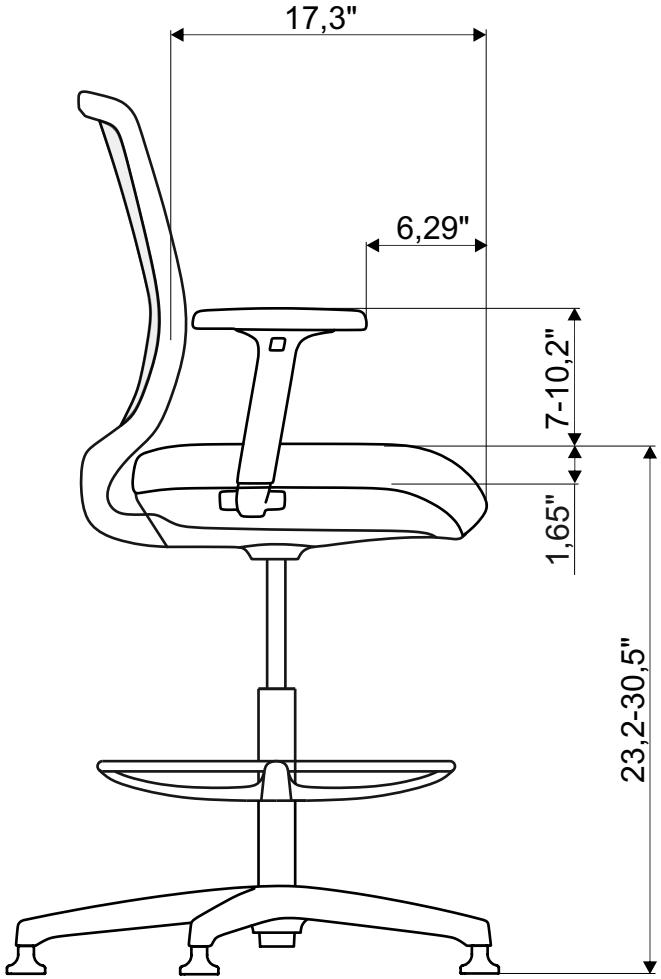


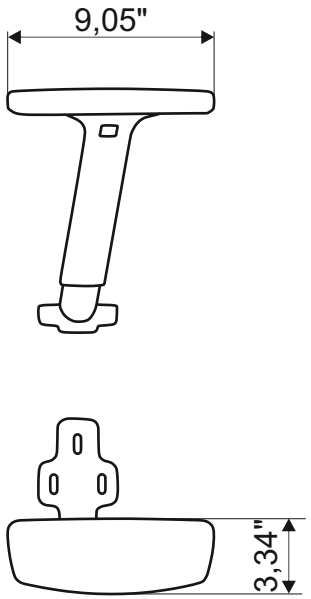


Dimensions with tolerances ±0,2".