
Oral-B
iO

Internet:
www.oralb.com
www.braun.com
www.service.braun.com

Braun GmbH
Frankfurter Str. 145
61476 Kronberg/Germany

Charger Type 3768
Handle Type 3758
Travel Case Type 3759
Smart Plug Type 492-xxxx



90095764/VI-22
CN/UK

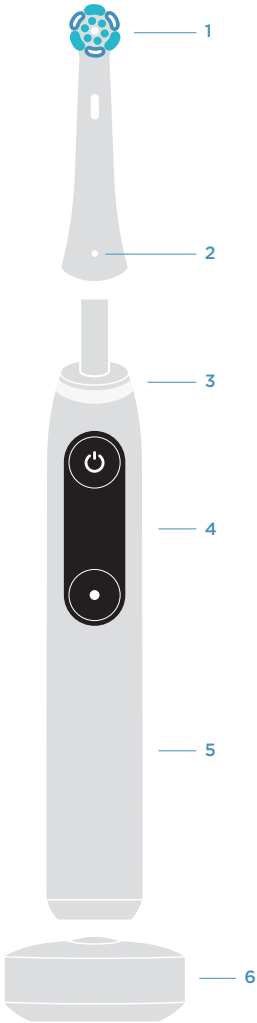
1
2
3
4
5
6



9


10


11


12


13


14


15


16

17

18

19

20

21

22

23



24



25


26


27

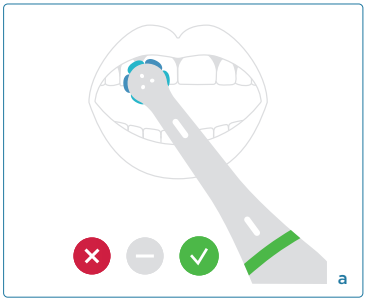
a

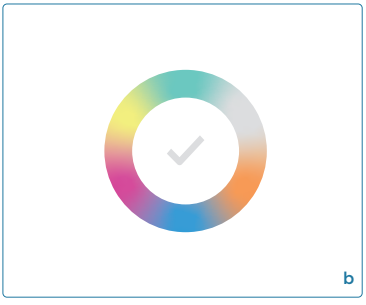
b

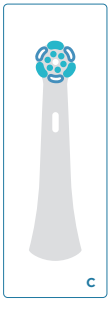
c

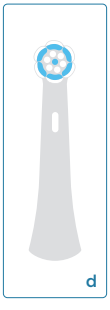
d

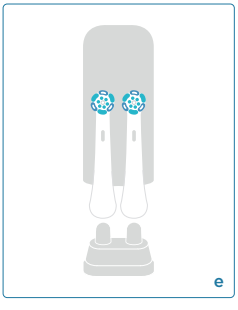
e

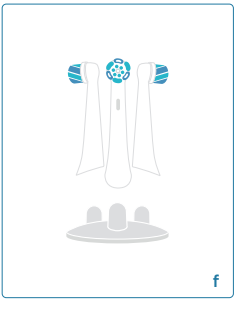
f

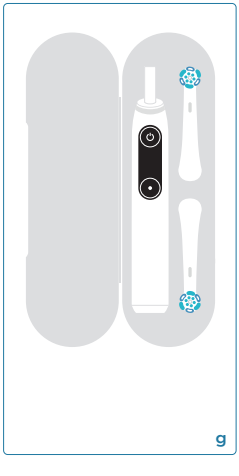
g

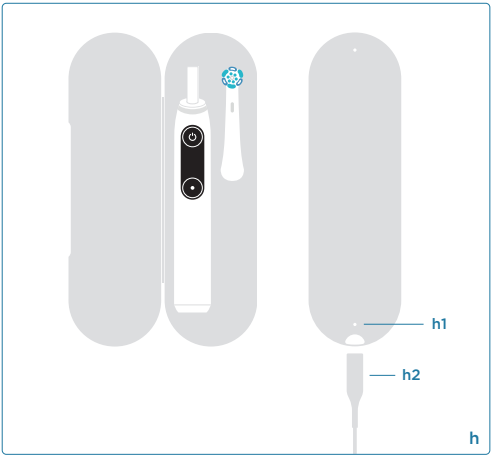
h1
h2
h

描述

1 刷頭
2 刷頭識別符號
3 智能壓力感測器(光環)
4 互動顯示幕
5 刷柄
6 充電器
7 開/關按鈕
8 模式按鈕
9 互動顯示功能
10 日常清潔模式
11 敏感模式
12 牙齦護理模式
13 美白模式
14 深層清潔模式
15 敏感專護模式
16 舌苔清潔模式
17 設置菜單
18 設置功能表功能
19 管理藍牙*Bluetooth*®設置
20 選擇/更換光環顏色
21 選擇/改變語言
22 恢復出廠設置
23 回饋功能
24 計時器
25 電池狀態
26 更換刷頭提醒
27 刷牙回饋

配件(取決於型號)和功能:
a 智能壓力感測器功能
b 通過Oral-B App訂製壓力感應環的顏色
c 極致清潔型刷頭^
d 溫和護理型刷頭
e 刷頭保護蓋
f 刷頭支架
g 旅行盒
h 充電型旅行盒
h1. 充電指示燈
h2. 智能充電插頭
i 下載Oral-B App並連接到藍牙*Bluetooth*® (見背頁)

^對比寶潔普通平頭牙刷，寶潔研發數據。

注意:內容可能會根據購買的型號而有所不同。說明書內所有圖片僅供參考，具體以實物為準。

歡迎使用Oral-B!

使用本牙刷前，請閱讀使用說明，並保存本說明書，以備將來參考。

重要

- 定期檢查整個產品/電源線/配件是否損壞。切勿繼續使用損壞或無法正常運作的配件。如產品/配件/電源線損壞，請送至Oral-B服務中心。不要自行改裝或維修本產品。這可能會導致火災、觸電或造成其他傷害。切勿將任何物件插入設備任何的開口處。
- 不建議3歲以下兒童使用。
  兒童和任何具身體、感官或精神能力障礙人士，或欠缺使用本產品相關知識及經驗的人士，須要在有適當的監督或足夠的指示下如何安全使用本產品，並明白產品的潛在風險，方可使用本產品。
- 切勿讓無人監護下的兒童清潔和維修保養本產品。
- 請勿讓兒童玩弄本產品。
- 本產品僅用於刷牙。請勿咀嚼或咬著牙刷。切勿當成玩具或在無成人監督下使用
- 本產品僅能用於本手冊中描述的預期用途。不要使用廠商沒有推薦使用的配件。
- 只使用產品配備的充電器和/或特殊設計之供電電線組合(智能插頭)替您的設備充電，當中包含了一個安全低電壓整合電源供應器，請勿自行替換或修改此配件的任何部分。若於充電座、充電隨身盒處記載 ᗡ-[492]-ᐸ492-XXXX時，請只使用Oral-B/Braun有相同標誌及編號的特殊設計之供電電線組合(智能插頭) 。

警告

- 不要將充電器、智能插頭或充電型旅行盒放在水裡或其他液體中，或放置在可能掉落或拉入浴缸或洗手盆的位置。切勿接觸已掉入水中的充電器，請立即自插座拔除電源插頭。
- 避免過度屈曲、卡住或擠壓電源線。
- 此設備包含不可更換的電池。本產品不含消費者可進行保養的零件。除了丟棄電池之外，請勿打開拆解本產品。請遵循本手冊中所述的電池/設備的處理和丟棄說明。
- 拔除電源插頭時，請注意握住電源插頭而不是電源線。手濕時切勿觸摸電源插頭，否則有可能觸電。
- 如果你正在接受任何口腔護理治療，請在使用前諮詢牙科專家。
- 此產品屬個人清潔衛生產品，並非供牙科診所或醫院機構使用於多位使用者而設計。出於衛生原因，我們建議每個家庭成員使用個人的刷柄和刷頭。
- 小部件可能脫落，請放置在兒童接觸不到的地方。

為了避免因刷頭破損而可能產生小部件導致窒息的危險或損壞牙齒:

- 每次使用前，請確保刷頭合適牢固地裝在刷柄上。如果刷頭不再適合妥當

地裝上，請停止使用牙刷。切勿在沒有刷頭的情況下使用。

- 如果牙刷刷柄掉落，即使外觀無可見的損壞，仍應在下次使用前更換刷頭。
- 建議至少每三個月更換一次刷頭，如發現刷頭磨損，可提前更換。
- 每次使用後請適當地清潔刷頭(請參閱《清潔建議》 一節)。正確的清潔以確保牙刷的安全使用和使用壽命。

重要資訊

- 該牙刷含有釹鐵硼磁鐵，可產生磁場。如果您正在使用醫療儀器或有植入醫療儀器，並且您對此牙刷的安全使用有疑問，請向醫療儀器製造商或醫生諮詢。
- 您的Oral-B牙刷可以與您的智能電話同時使用(在«把牙刷和智能手機連接起來»中找到詳細資訊)。為了避免電磁感應互相干擾和/或相容性衝突，在管制區(如飛機上或醫院的特殊區域)使用前，請先停用牙刷刷柄(5)上的藍牙Bluetooth®。
- 在互動顯示幕(4)上設定《Settings》選單中來停用藍牙->藍牙(Bluetooth)->關閉(disable)。按照相同的步驟即可重新啟動藍牙。
- 身上安裝了心臟起搏器的人士，必須時刻都與已啟動的電動牙刷保持15厘米（6吋）以上的距離。無論任何時候懷疑出現了干擾情況，應立即停止電動牙刷的藍牙。

規範

有關電壓規格，請參閱充電座底部。

第一次使用

請按下開啟/關閉按鈕(7)啟動您的牙刷，並按照互動顯示幕(4)上的說明開始第一次安裝。

如果沒有進一步指示顯示，您可以切換模式按鈕(8)和選擇開/關按鈕(7)。

您可以隨時通過《設置》功能表(17)更改設置。

充電和操作

- 充電時，將牙刷置於插入式充電器上(6)。
- 充電水準在互動顯示幕上顯示(4)。一次充滿電，顯示幕關閉。充滿電一般需要3小時。
- 如果電池電量不足，電機會降低速度，智能壓力感測器(3)會在短時間內閃爍紅色。一旦電池耗盡，電機停止； 在電量耗盡的情況下，需要至少充電5分鐘才能用一次。

  注意:如果電池是空的(顯示幕關閉)，至少需要充電30分鐘。
- 您可以將牙刷置於連接電源的充電器上，以保持電源滿格；設備可防止過度充電。

  注意:請將刷柄置於室溫下，以便於電池的最佳維護。

  注意:不要將刷柄暴露在高於50°C / 122°F的溫度下。

牙刷使用方法

開始刷牙

將刷頭安裝在刷柄上。刷柄與刷頭之間會有小間隙。

將刷柄從插入式充電器上拿起，或者拿起來喚醒牙刷(顯示器打開)。用水潤濕牙刷頭，塗上牙膏。為了避免濺起水花，在按下開關按鈕之前，先將刷頭對準你的牙齒。

注意:顯示器在20秒後關閉。您可以按下開關按鈕再次啟動顯示。

將刷頭從一顆牙移動到另一顆牙。刷洗外側、內側和咀嚼面和4個口腔區域。你也可以諮詢你的牙醫或牙科保健師關於正確的刷牙方法。

刷完牙後，顯示幕會根據你的刷牙時間給你回饋。

使用電動牙刷的頭幾天，牙齦可能會輕微出血。一般來說，幾天後出血會停止。如兩星期後仍不消失，請向牙科醫生或牙科衛生員諮詢。如果你有敏感的牙齒和/或牙齦，Oral-B推薦使用«敏感»或«敏感專護»模式(可配合使用Oral-B溫和護理型刷頭(d))。

計時器

計時器每隔30秒有短暫馬達震動變化，提醒你移動到口腔的下一個區域。連續多次馬達震動變化意味著牙科專家建議的2分鐘刷牙時間結束。

即使在刷牙過程中刷柄短暫關閉，計時器也能記住刷牙時長。如果暫停時間超過30秒或將刷柄放在插入式充電器上，計時器將重置。

注意:在使用Oral-B App的過程中，部分功能可能會關閉計時器。

注意:你也可以通過Oral-B App自訂計時器設置。

智能壓力感測器功能(a)

你的牙刷裝有一個智能壓力感測器(3)，通過不同顏色的光來顯示不同的功能:

白色(默認)=工作指示燈(通過Oral-B App (b)選擇單個顏色)/低壓指示燈
紅色=過壓指示燈/低電量指示燈
綠色=壓力指示燈
藍色=藍牙配對指示
橙色=錯誤指示符(跟隨顯示消息)

用正確的力度刷牙將會顯示綠燈。如果壓力太大，會亮起紅燈，提醒你減少壓力。如果智能壓力感測器顯示白色(或您預先選擇的顏色)，我們建議施加更多的壓力。

在過壓情況下，刷頭的運動將減少(在«日常清潔»、«深層清潔»和«敏感»模式下)。

使用過程中，通過適度按壓刷頭，定期檢查智能壓力感測器的運行情況。

注意:在使用Oral-B App的過程中，智能壓力感測器回饋可能會因為某些功能而失效。

注意:智能壓力感測器在«舌苔清潔»模式下失效。(取決於型號)

刷牙模式(根據型號而定)

您的牙刷提供不同的刷牙模式顯示:

《日常清潔》-每日清潔的標準模式
《敏感》-溫和，但徹底清潔敏感區域
《牙齦護理》一一對牙齦進行輕柔的按摩
《美白》-偶爾或每天使用的拋光
《深層清潔》-更高強度的清潔　(以更高的速度操作)
《敏感專護》-對特別敏感的區域進行更溫和的清潔
《舌苔清潔》-偶爾或每天使用的舌苔清潔

註：這些順序以及刷牙模式的有無可能要視您所購買的機型而定，以實物為準。

當運行«舌苔清潔»模式時，我們建議使用«溫和護理»型刷頭(d)。你可以用牙膏或不使用牙膏,以輕柔的動作全面地刷整個舌頭。建

議刷牙時間為30秒; 30秒之後馬達會停止。

模式設置:

在刷柄處於喚醒狀態(打開顯示)時，您可以依次按下模式按鈕(8)來選擇預設模式。按下開啟/關閉按鈕(7)選擇一種模式。您的牙刷將以所選的預設狀態啟動。你也可以在刷牙時改變模式。

注意:你也可以通過Oral-B App自訂模式設置。

交互顯示

按開/關按鈕(7)打開互動顯示(4)。如果沒有在顯示上進一步指示，您可以切換模式按鈕並選擇開/關按鈕。

(10-16)«模式選擇»-通過按下模式按鈕來切換，並選擇帶有開/關按鈕的預設啟動模式。

(17)«設置»—在所有模式之間切換，直到您到達«設置»選項;按開/關鍵進入:

->(19)管理藍牙設置(de/activate, disable)

->(20)選擇/改變光環的顏色

->(21)選擇/更改語言

->(22)恢復出廠設置

(24)《計時器》——顯示刷牙時間。

(25)«電池狀態»—顯示電池使用後、充電時或電池電量不足時的狀態。

(26)《更換提醒》—提醒您何時更換刷頭。

(27)《刷牙回饋》——刷牙回饋用笑臉表示。

《牙刷喚醒》當刷柄被拿起，從插拔的充電器上拿起，或者當你按下開關按鈕時，刷柄顯示它準備好了。

«錯誤資訊»-《外部操作限制》:你在標準溫度和/或高於標準電池電流的條件下操作或充電。

刷頭

Oral-B提供多種不同的Oral-B iO牙刷頭(c/d)，只適合您的Oral-B iO刷柄，用於精准清潔每顆牙齒。

大多數iO Oral-B刷頭具有指示型®刷毛，以幫助您監測刷頭更換的需要。每天兩次徹底的刷牙，每次兩分鐘，大約3個月後，刷毛的顏色就會在中段褪色，這說明你需要更換你的牙刷頭了。如果刷毛在顏色消退前張開，可能會對牙齒和牙齦造成太大的壓力。

一般建議至少每3個月更換一次刷頭。

把牙刷和智能手機連接起來

這款Oral-B應用適用於運行iOS或Android™作業系統的智能手機。可從App Store(SM) / Google Play™免費下載，也可掃描本手冊背面的二維碼(i)。

- 啟動Oral-B App，引導您完成整個藍牙配對過程。你也可以在應用程式的設置下找到它(更多->您的牙刷)。

  注意:如果在您的智能手機上禁用藍牙，Oral-B App功能將受到限制(有關說明請參閱您的智能手機的用戶手冊)。

- 配對是通過一個智能壓力感測器燈所顯示。任何應用程式的說明都會顯示在你的智能手機上。
- 您可以隨時通過顯示 ->設置-> 啟用/禁用藍牙來更改您的藍牙設置。
- 與牙刷一起使用時，將智能手機放在近距離(不超過5米)的地方。確保智能手機安全放置在乾燥的地方。

  注意:您的智能手機必須支持藍牙4.2(或更高)/藍牙智能，以配對您的處理。查看app.oralb.com，查看可相容的智能手機和Oral-B應用程

式的國家可用性。

注意:按照智能手機的用戶手冊,確保您的手機/充電器是為衛生間環境使用而設計的。

清潔建議

刷完牙後,啟動刷柄,用流動的水沖洗刷頭。拆下刷頭,分別清洗刷柄和刷頭。確保水在刷柄頂部和刷頭內部流動。將所有部件擦乾,風乾後再重新組裝牙刷。

在清洗前拔掉充電器。定期用濕布清潔充電器。

請在《配件》一欄中查看每個附件的清洗說明。

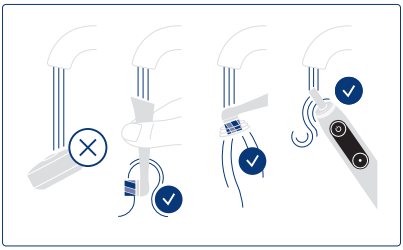

配件

(取決於型號,以實物為准)

充電型旅行盒(h)*

- 要為刷柄充電 (5),請將其放入為充電型旅行盒(h) 充電並將其連接到一個電源插座,使用額外的電源供應 (h2)提供。 電源可用於所有全球電源電壓範圍 (100 - 240V)。
- 充電型旅行盒的閃燈 (h1) 表示刷柄正在充電。刷柄充滿電後,閃燈會關掉。刷柄充滿電通常需要6個小時。
- 清潔外殼和內殼時請只用濕布。確保刷柄和刷頭存放在充電型旅行盒中之前完全乾燥

注意:充電型旅行盒表面的污漬應立即清潔。

將充電型旅行盒存放在乾淨且風乾的地方。

*充電型旅行盒需連接電源充電。

旅行盒(g)

將清潔及乾燥的牙刷/刷頭儲存在旅行盒內(g)。

外殼和內殼只能用濕布清洗。

注意:立即清洗旅行盒體表面的污漬。

將旅行盒存放在清潔乾燥的地方。

刷頭支架(f) /刷頭保護蓋(e)

你可以將清潔過的刷頭儲存在刷頭支架上。確保刷頭已經乾燥,然後再將刷頭放入支架和/或蓋上蓋子。刷頭支架和蓋子是適用於洗碗機清潔的。

拉鏈式旅行盒/磁吸保護袋

將清潔乾燥的牙刷/刷頭放入拉鏈式旅行盒中。

外殼和內殼可在自來水下清洗。

將清潔乾燥的牙刷連同刷頭保護蓋(e)一起放入磁吸保護袋中。確保刷頭已乾燥,然後將刷頭放入杯架和/或蓋上蓋子。外部和內部表面可在自來水下清潔。將保護袋儲存在乾淨乾燥的地方。

注意:立即清潔保護袋表面的污漬。

若有變更請恕不另行通知。

環保注意事項

本產品含有電池與/或可回收電子廢棄物。為維護環境，請勿將其與家居垃圾一起處理；請將其送至您所在地的電子廢棄物回收站。



產品使用壽命結束時取出電池

除了要丟棄電池以外請勿拆解本產品。取出電池前請耗盡其電量。在取出電池進行處理時，請先穿戴防護衣物(手套、護目鏡等)以免電池滲漏時接觸到皮膚。請注意不要導致正(+)負(-)極短路。隔離電池(例如使用膠帶)並將其置於塑膠袋內丟棄。

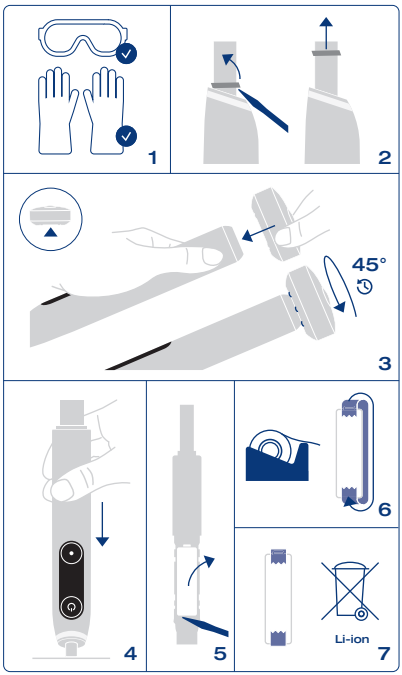

依圖示打開刷柄及請按指示移除電池，並依照當地環保法規棄置。

請注意！一旦拆開刷柄即損壞本產品，將不再享受保養服務。

保養

本公司針對本產品從採購當日起算提供兩年的保養。

在保養有效期間本公司將免費去除任何因材料或工藝所導致的任何產品瑕疵，修理或更換產品得依本公司的選擇而定。

由於產品可取得性之故，本公司可能會以不同顏色或同等機型的產品更換。

本保養服務適用於由Braun/Oral-B或其指定經銷商供貨之各個國家。保養服務並不包含：由於使用不當造成的產品損壞；電動牙刷刷柄防水膜破裂；正常使用引起的產品老化、磨損（如刷頭等），以及對產品的價值或使用功能影響不大的一些瑕疵。

若本產品交由非授權人員維修或者使用非Braun/Oral-B原廠零件時，將導致保養失效。

本產品具有智能藍牙認可的無線電介面。除非藍牙介面問題屬Oral-B之責任，否則本保養服務不包含無法與特定智能型手機建立智能藍牙連線。藍牙裝置的保養是由其相關製造商所提供，而非Oral-B。Oral-B對裝置製造商並無影響也不做任何建議，因此請恕Oral-B不負責與本公司藍牙介面相容之裝置數量。

Oral-B保留權利進行確保Oral-B系統可靠運作所需之裝置功能系統執行之修改或變更以及手冊結構變更，請恕不另行通知。

要在保養有效期間獲得服務時，請將整組產品連同收據一起交由或送交授權的Oral-B Braun客服中心。

不論是在保養期內還是在保養期之外，可更換或維修的產品、元件、零件以Braun/Oral-B可提供的為準。

資訊

藍牙(Bluetooth®)無線電模組

雖然有支援藍牙裝置上顯示的所有功能，但Oral-B並不保證100%的連線可靠性以及功能運作的一致性。
操作性能以及連線可靠性與各藍牙裝置、軟體版本以及這些藍牙裝置的操作系統與裝置上所執行的公司安全規定直接相關。
Oral-B嚴格遵守與執行藍牙標準以便藍牙裝置可與Oral-B牙刷連接在其上運作。
但若裝置製造商未遵守該標準時，藍牙相容性及功能會無法正常運作，而使用者可能會遇到功能與特性方面的相關問題。請注意，藍牙裝置上的軟體對相容性及操作上會有重大的影響。

保養 – 責任排除和限制

此有限保養僅適用於可以通過所附的Braun / Oral-B 商標、商品名稱或徽標識別的由寶潔公司或其關聯公司或子公司 (合稱“寶潔”) 生產的或為寶潔生產的新產品。此有限保養不適用於任何非寶潔產品，包括硬件和軟件。寶潔不對任何程序、數據，或存儲在產品內的任何媒體上的其他信息的損壞、損害或丟失負責，亦不對任何此有限保養不適用的非寶潔產品或部件負責。恢復或重新安裝程序、數據或其他信息不在此有限保養範圍內。
本有限保養不適用於 (i) 因意外、濫用、誤用、疏忽、不當使用或非寶潔產品而造成的損壞或損害；(ii) 由Braun 或Braun授權服務地點以外的任何人提供的服務造成的損壞或損害； (iii) 未經寶潔書面許可被修改的產品或部件；以及 (iv) 因使用或無法使用Oral-B 智能手機支架/定位器、智能手機鏡架，或方便充電旅行盒而造成的損壞或損害（“配件”）。

保養更換刷頭

若充電刷柄的損壞是因為使用非Oral-B更換刷頭所引起時，將會導致Oral-B保養失效。
Oral-B不建議使用非Oral-B的更換刷頭。

- Oral-B無法控制非Oral-B更換刷頭的品質。因此本公司無法確保非Oral-B更換刷頭可提供於初次購買時連同充電刷柄所述之潔牙效果。使用非Oral-B品牌刷頭可能會損傷您的牙齒或口腔。
- Oral-B 無法保證非Oral-B更換刷頭可以確實安裝。
- Oral-B無法預測非Oral-B更換刷頭對刷柄磨耗的長期效應。使用非Oral-B品牌刷頭可能會對您的歐樂-B電動牙刷造成損害。所有Oral-B更換刷頭均具備Oral-B標誌且符合Oral-B的高品質標準。

Oral-B並未以任何其他廠牌名稱販售更換刷頭或刷柄零件。

疑難排除

問題	可能原因	解決辦法
APP		
用Oral-B App無法(正常)操作刷柄	1. Oral-B App未開啟。 2. 智能手機尚未啟動藍牙。 3. 刷柄上的藍牙未開啟。 4. 藍牙與智能手機之間沒有連線。	1. 開啟Oral-B App。 2. (依照手機使用者手冊)啟動手機上的藍牙。 3. 依照顯示幕上設定>啟動藍牙的步驟啟動藍牙。

	5. 您的手機並不支援藍牙4.2 (或以上)/ 智能藍牙。 6. Oral-B App過期。	4. 透過APP設定再次將刷柄與手機配對。搭配刷柄使用時請將手機放在身邊。 5. 您的手機必須要支援藍牙4.2 (或以上)/ 智能藍牙才能夠與刷柄配對。有關手機相容性及Oral-B App在各個國家的可用性資訊請參考網站app.oralb.com。 6. 請下載最新的Oral-B App。
重設回工廠設定	需要原始功能性	透過顯示幕設定 -> 工廠重設(22)來輸入。請按on/off按鈕確認。
牙刷		
(第一次使用時)刷柄並沒有運作。	1. 電池的電量太低；無法操作刷柄。 2. 操作時超出標準溫度範圍(顯示幕上的訊息與/或智能壓力感測器上閃爍的燈光)。	1. 請充電至少30分鐘。 2. 一定要在標準操作溫度範圍之內(> 0°C與< 40°C)操作。
2分鐘之後發出急促的短音或刷柄並未操作任何計時器。	計時器被透過APP修改過/關掉。	請用App更改計時器設定會進行工廠重設(請見App疑難排除)。
刷柄沒有充電。	1. 電池的電量太低(0%)；可能需要10-15分鐘，顯示器才會啟動。 2. 充電時的環境溫度超出有效範圍(< 0°C與> 40°C)。 3. 充電器可能沒有接好。	1. 請充電至少30分鐘。 2. 充電時的建議環境溫度為5°C到35°C。 3. 請確實將充電器在插座上插好。
刷牙或開機時出現震動/雜音。	1. 刷頭沒有正確安裝在牙刷刷柄上。 2. 刷頭可能磨損。	1. 請檢查刷頭是否確實在刷柄上裝好。兩者之間會有些微的縫隙。 2. 請更換刷頭。

本充電牙刷具有一個無線電模組，其操作頻率範圍是2.4到2.48 GHz且最大功率為1mW。

Braun GmbH特此聲明，無線電裝備種類3758a、3771、3765、3754、3764、3762及3767均符合歐盟指令2014/53/EU。有關EU符合性聲明的全文請參考下列網址：www.oralb.com/ce。

Description

1 Brush head
2 Brush head identification symbol
3 Smart Pressure Sensor (Light Ring)
4 Interactive Display
5 Handle
6 Charger
7 On/off button
8 Mode button
9 Interactive Display features
10 «Daily Clean» mode
11 «Sensitive» mode
12 «Gum Care» mode
13 «Whiten» mode
14 «Intense» mode
15 «Super Sensitive» mode
16 «Tongue Clean» mode
17 Settings menu
18 Settings menu features
19 Manage *Bluetooth*® settings
20 Select/Change colour of Light Ring
21 Select/Change language
22 Perform factory reset
23 Feedback features
24 Timer
25 Battery status
26 Exchange reminder
27 Brush feedback

Accessories and features:

a Smart Pressure Sensor features
b Customize colour of Light Ring via Oral-B App
c Brush head «Ultimate Clean»
d Brush head «Gentle Care»
e Brush head holder with cap
f Brush head holder stand
g Travel case
h Charging travel case
h1 Charging light
h2 Power supply (Smart Plug)
i Download Oral-B App and connect to *Bluetooth*® (see back page)

Note: Content may vary based on the model purchased.

English

Welcome to Oral-B!

Before operating this toothbrush, please read these instructions and save this manual for future reference.

IMPORTANT

- Periodically check the entire product/cords/accessories for damage. A damaged or non-functioning unit should no longer be used. If the product/cord/accessories are damaged, take it to an Oral-B Service Centre. Do not modify or repair the product. This may cause fire, electric shock or injury. Never insert any object into any opening of the appliance.
- Usage by children under age 3 is not recommended. Toothbrushes can be used by children and persons with reduced physical, sensory or mental capabilities or lack of experience and knowledge, if they have been given supervision or instruction concerning use of the appliance in a safe way and understand the hazards involved.
- Cleaning and user maintenance shall not be made by children without supervision.
- Children shall not play with the appliance.
- For tooth brushing only. Do not chew or bite on brush. Do not use as a toy or without adult supervision.
- Use this product only for its intended use as described in this manual. Do not use attachments which are not recommended by the manufacturer. Only use the charger provided with your appliance.
- Only use the charger and/or special cord set with integrated Safety Extra Low Voltage power supply provided with your appliance. Do not exchange or tamper with any part of it. If the appliance is marked with 

, only use Oral-B/Braun power supplies coded 492-XXXX.

WARNING

- Do not place the charger, smart plug or charging travel case in water or liquid or store where it can fall or be pulled into a tub or sink. Do not reach for it when fallen into water. Unplug immediately.
- Avoid sharp bending, jamming or squeezing of the cord.
- This appliance contains batteries that are non-replaceable. The appliance has no user serviceable parts. Do not open and disassemble device except when disposing of the battery. Follow handling and disposal instructions of the battery/device described in this manual.
- When unplugging, always pull the power plug instead of the cord. Do not touch the power plug with wet hands. This can cause an electric shock.

- If you are undergoing treatment for any oral care condition, consult your dental professional prior to use.
- This toothbrush is a personal care device and is not intended for use on multiple patients in a dental practice or institution. For hygienic reasons we recommend the use of individual brush handles and brush heads for each family member.
- Small parts may come off, keep out of reach of children.

To avoid brush head breakage which may generate a small parts choking hazard or damage teeth:

- Prior to each use, ensure the brush head fits well. Discontinue use of the toothbrush, if brush head no longer fit properly. Never use without a brush head.
- If the toothbrush handle is dropped, the brush head should be replaced before the next use even if no damage is visible
- Replace brush head every 3 months or sooner if brush head becomes worn.
- Clean brush head properly after each use (see «Cleaning recommendations» paragraph). Proper cleaning ensures the safe use and functional life of the toothbrush.

Important Information

- This toothbrush, charger and pouch (accessory) contain NdFeB magnets and generate magnetic fields. If you use a medical device or have an implanted medical device, consult with the medical device manufacturer or a physician, if you have questions about safely using your Oral-B iO toothbrush.
- Your Oral-B toothbrush can be used with your smartphone (find details under «Connecting your toothbrush to your Smartphone»). To avoid electromagnetic interference and/or compatibility conflicts, disable *Bluetooth*® on your toothbrush handle (5) before using it in restricted surroundings, such as aircrafts or specially marked areas in hospitals.
- Disable *Bluetooth* by entering the «Settings» menu on the interactive display (4) -> *Bluetooth* -> disable. Follow the same procedure to enable *Bluetooth* again.
- Persons with pacemakers should always keep the toothbrush more than 15 centimeters (six inches) from the pacemaker while turned on. Anytime you suspect interference is taking place disable *Bluetooth*.

Specifications
For voltage specifications refer to the bottom of the charging unit.

First use

Please wake up your toothbrush by pressing the on/off button (7) and follow the instructions on the interactive display (4) to get started for first time setup.
If not further instructed on the display, you may toggle with the mode button (8) and select with the on/off button (7).
You may change the settings via the «Settings» menu (17) at any time.

Charging and Operating

- To charge the battery place the toothbrush on the plugged-in charger (6).
- The charge level is indicated on the interactive display (4). Once it is fully charged the display turns off.
  A full charge typically takes 3 hours.
- If the battery is running low the motor reduces its speed and the Smart Pressure Sensor (3) shortly blinks in red. Once the battery is empty, the motor stops; it will need at least a 5-minute charge for one usage.

Note: In case the battery is empty (display off), charge for at least 30 minutes.

- You can always store the handle on the plugged-in charger to maintain it at full charge; a battery overcharge is prevented by the device.

Note: Store handle at room temperature for optimal battery maintenance.

Caution: Do not expose handle to temperatures higher than 50°C / 122°F.

Using your toothbrush

Start Brushing
Place the brush head on the handle. A small gap should remain between handle and brush head. Lift the handle off the plugged-in charger or simply pick it up to wake up the handle (display turns on). Wet brush head and apply toothpaste. To avoid splashing, guide the brush head to your teeth before switching the handle on by pressing the on/off button.

Note: Display turns off after some time.
You may press the on/off button to activate display again.

Guide the brush head from tooth to tooth. Brush the outsides, the insides and the chewing surfaces. Brush all four quadrants of your mouth equally. You may also consult your dentist or dental hygienist about the right technique for you.
After Brushing, the display gives you feedback based on your brushing time.
In the first days of using any electric toothbrush, your gums may bleed slightly. In general, bleeding should stop after a few days. Should it persist after 2 weeks, please consult your dentist or dental hygienist. If you have sensitive teeth and/or gums, Oral-B recommends using the «Sensitive» or «Super Sensitive» modes (optional in combination with an Oral-B «Gentle Care» brush head (d)).

Timer

The timer signals with a short stuttering sound at 30-seconds intervals to move to the next quadrant of your mouth. A long stuttering sound indicates the end of the professionally recommended 2-minute brushing time.

The timer memorizes the elapsed brushing time, even when the handle is briefly switched off during brushing. The timer resets if pausing longer than 30 seconds or placing the handle on the plugged-in charger.

Note: During the use of the Oral-B App, the timer may be deactivated for some features.

Note: You may also customize the timer settings via Oral-B App.

Smart Pressure Sensor features (a)
Your toothbrush is equipped with a Smart Pressure Sensor (3) that has various functionalities indicated via different colours of light:

White (default) = Operating indicator (choose individual colour via Oral-B App (b)) /
Low pressure indicator

Red = high pressure indicator / low battery indicator

Green = recommended pressure indicator

Blue = *Bluetooth* pairing indicator

Orange = Error indicator (follow display messages)
Brush with the right pressure indicated with a green light. If too much pressure is applied, it lights up in red reminding you to reduce pressure. If the Smart Pressure Sensor illuminates in white (or your pre-selected colour), we recommend applying more pressure.
During high pressure the brush head movement will be reduced (in «Daily Clean», «Intense Clean» and «Sensitive» modes).
Periodically check the operation of the Smart Pressure Sensor by pressing moderately on the brush head during use.

Note: During the use of the Oral-B App, the Smart Pressure Sensor feedback may be inactive for some features.

Note: Smart Pressure Sensor is deactived during «Tongue Clean» mode.

Brushing modes (depending on model)
Your toothbrush offers different brushing modes indicated on the display:

«Daily Clean» – Standard mode for daily cleaning

«Sensitive» – Gentle, yet thorough cleaning for sensitive areas

«Gum Care» – Gentle massage of gums

«Whiten» – Polishing for occasional or everyday use

«Intense» – For an extraordinary clean feeling (operated with a higher speed)

«Super Sensitive» – Super gentle cleaning for extra sensitive areas

«Tongue Clean» – Tongue cleaning for occasional or everyday use

When operating the «Tongue Clean» mode, we recommend using a «Gentle Care» brush head (d). You can brush your tongue either with or without toothpaste. Brush the whole area of your tongue systematically in gentle movements. The recommended brushing time is 30 seconds; the motor stops after 30 seconds.

Mode setting:
You may first choose your default mode by pressing the mode button (8) successively once the handle is awake (display turned on). Select a mode by pressing the on/off button (7). Your toothbrush starts in the selected default mode. You may also change modes during brushing.

Note: You may also customize mode settings via Oral-B App.

Interactive Display
Turn on the interactive display (4) by pressing the on/off button (7). If not further instructed

on the display, you may toggle with the mode button and select with the on/off button.
(10-16) «Mode selection» – toggle by pressing the mode button and select default start mode with on/off button.
(17) «Settings» – toggle through all modes until you reach the option «Settings»;
to enter press the on/off button:
-> (19) manage *Bluetooth* settings (enable, disable)
-> (20) select/change colour of Light Ring
-> (21) select/change language
-> (22) perform factory reset
(24) «Timer» – displays brushing time.
(25) «Battery status» – shows battery status after use, when charging or when battery is low.
(26) «Exchange reminder» – reminds you when to replace your brush head.
(27) «Brush feedback »– brushing feedback is indicated with a smiley face.

«Brush waking» when handle is picked up, lifted off the plugged-in charger or when you press the on/off button the handle indicates its readiness.

«Error messages» – «outside operating limits»: you are operating or charging outside standard temperatures and/or above standard battery current.

Brush heads

Oral-B offers you a variety of different Oral-B iO brush heads (c/d) that only fit your Oral-B iO toothbrush handle and can be used for tooth-by-tooth precision cleaning.

Most iO Oral-B brush heads feature INDICATOR® bristles to help you monitor brush head replacement need.
With thorough brushing, twice a day for two minutes, its colour will fade halfway approximately within 3 months, indicating the need to exchange your brush head. If the bristles splay before the colour recedes, you may exert too much pressure on teeth and gums.
In general, we recommend replacing the brush head every 3 months.

Connecting your toothbrush to your Smartphone

The Oral-B App is available for smartphones running iOS or Android™ operating systems. It can be downloaded for free from App Store(SM) / Google Play™ or you may scan the QR code on the back page of this manual (i).

- Launch the Oral-B App. It will guide you through the entire *Bluetooth* pairing procedure. You may also find it under the App´s settings (More -> Your brush).

Note: Oral-B App functionality is limited if *Bluetooth* is deactivated on your smartphone (for directions please refer to your smartphone's user manual).

- Pairing is indicated via the Smart Pressure Sensor light. Any App instructions will be displayed on your smartphone.
- You may change *Bluetooth* settings at any time on your handle via the display -> Settings -> *Bluetooth* enable/disable.
- Keep your smartphone in close proximity (within 5m distance) when using it with the handle. Make sure the smartphone is safely positioned in a dry place.

Note: Your smartphone must support *Bluetooth* 4.2 (or higher) / *Bluetooth* Smart in order to pair your handle.
Check www.oralbappavailability.co.uk for compatible smartphones and country availability of the Oral-B App.

Caution: Follow your smartphone's user manual to ensure your phone/charger is designed for use in a bathroom environment.

Cleaning recommendations

After brushing, rinse your brush head under running water with the handle switched on. Remove the brush head and clean the handle and brush head separately. Make sure water runs inside the top of the handle as well as inside the brush head. Wipe all parts dry and let them air-dry before reassembling your toothbrush again.
Unplug the charger before cleaning.
Clean the charger regularly with a damp cloth.
Please check individual cleaning instructions for each accessory in its «Accessories» paragraph.

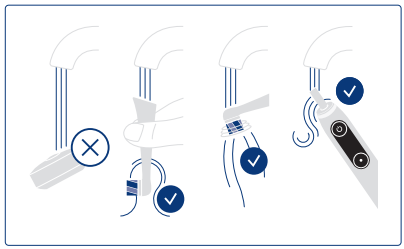

Accessories

(depending on model)

Charging Travel Case (h)

- To charge your handle (5) place it in the charging travel case (h) and connect it to an electric outlet, using the extra power supply (h2) provided. The power supply may be used for all global mains voltage ranges (100 – 240V).
- The charging light (h1) of the charging travel case indicates that the handle is charging. Once the handle is fully charged the light turns off. A full charge typically takes 6 hours.
- The outer and inner case should be cleaned with a damp cloth only. Make sure that the handle and brush head are completely dry before storing in the travel case.

Note: Clean stains on travel case surface immediately. Store travel case in a clean and dry place.

Travel Case (g)

Store the clean and dry toothbrush/brush heads in the travel case (g).
The outer and inner case should be cleaned with a damp cloth only.

Note: Clean stains on travel case surface immediately. Store travel case in a clean and dry place.

Brush head holder stand (f) / Brush head holder with cap (e)

You may store your cleaned brush heads on the pins of the brush head holders. Make sure brush heads are dried before placing them in the holder and/or closing the cap. Brush head holders and cap are dishwasher-safe.

Zipper Pouch / Magnetic Pouch

Store the clean and dry toothbrush/brush heads in the zipper pouch.
The outer and inner case can be cleaned under running water.
Store the clean and dry toothbrush along with the brush head holder (e) in the magnetic pouch. Make sure brush heads are dried before placing them into the holder and/or closing the cap. The outer and inner surfaces can be cleaned under running water. Store pouches in a clean and dry place.

Note: Clean stains on pouch surfaces immediately.

Subject to change without notice.

Environmental Notice



Product contains batteries and/or recyclable electric waste. For environment protection do not dispose in household waste, but for recycling take to electric waste collection points provided in your country.

Battery removal at the end of the product's useful life

Do not disassemble the product except when disposing of the battery. Run down battery before removing. When taking out the battery for disposal, use protective clothing (gloves, safety glasses, etc.) to omit skin contact whilst leaking batteries. Use caution not to short the positive (+) and negative (–) terminals. Insulate terminals (e.g. with tape) and put the battery in a plastic bag for disposal.

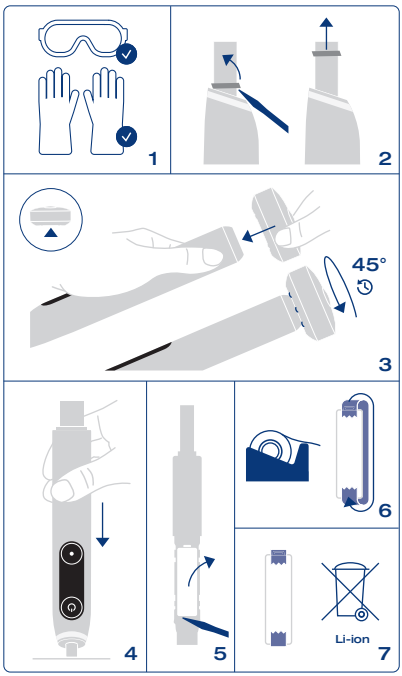

Open the handle as shown, remove the battery and dispose of it according to local environmental regulations.

Caution! Opening the handle will destroy the appliance and invalidate the warranty.

Guarantee

We grant 2 years guarantee on the product commencing on the date of purchase.
Within the guarantee period we will eliminate, free of charge, any defects in the appliance resulting from faults in materials or workmanship, either by repairing or replacing the complete appliance as we may choose. Depending on availability replacement of a unit might result in a different colour or an equivalent model.

This guarantee extends to every country where this appliance is supplied by Braun/ Oral-B or its appointed distributor. This guarantee does not cover: damage due to improper use, normal wear or use, especially regarding the brush heads, as well as defects that have a negligible effect on the value or operation of the appliance.

The guarantee becomes void if repairs are undertaken by unauthorized persons and if original Braun/Oral-B parts are not used.

This appliance is equipped with a *Bluetooth* Smart approved radio interface. Failure to establish a *Bluetooth* Smart connection to specific smartphones is not covered under the device guarantee, unless the malfunction of the *Bluetooth* interface is referable to Oral-B. The *Bluetooth* devices are warranted by their own manufacturers and not by Oral-B. Oral-B does not influence or make any recommendations to device manufacturers, and therefore Oral-B does not assume any responsibility for the number of compatible devices with our *Bluetooth* interface.

Oral-B reserves the right, without any prior notice, to make any technical modifications or changes to system implementation of device features, interface, and menu structure changes that are deemed necessary to ensure that Oral-B systems function reliably.
To obtain service within the guarantee period, hand in or send the complete appliance with your sales receipt to an authorized Oral-B Braun Customer Service Centre.

Information

***Bluetooth*® radio module**
Although all indicated functions on the *Bluetooth* device are supported, Oral-B does not ensure 100% reliability in connection, and feature operation consistency.
Operation performance and connection reliability are direct consequences of each individual *Bluetooth* device, software version, as well as the operating system of those *Bluetooth* devices and company security regulations implemented on the device.
Oral-B adheres to and strictly implements the *Bluetooth* standard by which *Bluetooth* devices can communicate and function in Oral-B toothbrushes.
However, if device manufacturers fail to implement this standard, *Bluetooth* compatibility and features will be further compromised and the user may experience functional and feature-related issues. Please note that the software on the *Bluetooth* device can significantly affect compatibility and operation.

Warranty – Exclusions and Limitations
This limited warranty applies only to the new products manufactured by or for The Procter & Gamble Company, its Affiliates or Subsidiaries («P&G») that can be identified by the Braun / Oral-B trademark, trade name, or logo affixed thereto. This limited warranty does not apply to any non-P&G product including hardware and software. P&G is not liable for any damage to or loss of any programs, data, or other information stored on any media contained within the product, or any non-P&G product or part not covered by this limited warranty. Recovery or reinstallation of programs, data or other information is not covered under this limited warranty.
This limited warranty does not apply to (i) damage caused by accident, abuse, misuse, neglect, misapplication, or non-P&G product; (ii) damage caused by service performed by anyone other than Braun or authorized Braun service location; (iii) a product or part that has been modified without the written permission of P&G, and (iv) damage arising out of the use of or inability to use the Oral-B Smartphone stand/puck, Smartphone mirror holder, or charging travel case («Accessories»).

Warranty replacement brush heads
Oral-B warranty will be voided if electric rechargeable handle damage is found to be

attributed to the use of non-Oral-B replacement brush heads.
Oral-B does not recommend the use of non-Oral-B replacement brush heads.

- Oral-B has no control over the quality of non-Oral-B replacement brush heads. Therefore, we cannot ensure the cleaning performance of non-Oral-B replacement brush heads, as communicated with the electric rechargeable handle at time of initial purchase.
- Oral-B cannot ensure a good fit of non-Oral-B replacement brush heads.
- Oral-B cannot predict the long-term effect of non-Oral-B replacement brush heads on handle wear.

All Oral-B replacement brush heads carry the Oral-B logo and meet Oral-B's high quality standards. Oral-B does not sell replacement brush heads or handle parts under any other brand name.

Trouble Shooting

Problem	Possible reason	Remedy
APP		
Handle does not operate (properly) with Oral-B App.	1. Oral-B App is closed. 2. *Bluetooth* is not activated on smartphone. 3. *Bluetooth* is disabled on handle. 4. *Bluetooth* connection to smartphone has been lost. 5. Your smartphone does not support *Bluetooth* 4.2 (or higher)/ *Bluetooth* Smart. 6. Outdated Oral-B App.	1. Launch Oral-B App. 2. Activate *Bluetooth* on smartphone (described in its user manual). 3. Enable *Bluetooth* via display Settings -> *Bluetooth* enable. 4. Pair handle and smartphone again via App settings. Keep your smartphone in close proximity when using it with handle. 5. Your smartphone must support *Bluetooth* 4.2 (or higher)/ *Bluetooth* Smart in order to pair handle. Check www.oralbappavailability.co.uk for compatible smartphones and country availability of the Oral-B App. 6. Download latest Oral-B App.
Reset to factory settings.	Original functionality wanted.	Enter via display Settings -> Factory Reset (22). Press on/off button to confirm.
TOOTHBRUSH		
Handle is not operating (during first use).	1. Battery has a very low charge level; handle does not operate. 2. Operating outside standard temperature (message on display and/or alternating lights of Smart Pressure Sensor)	1. Charge at least for 30 min. 2. Always operate in standard operating temperatures (> 0°C and < 40°C).
Short stuttering sounds after 2 minutes or handle does not operate any timer.	Timer has been modified/deactivated via App.	Use App to change timer settings or perform factory reset (see App Trouble Shootings).

Handle does not charge.	1. Battery is at a very low charger level (0%); it may take up to 10-15min until display turns on. 2. Ambient temperature for charging is out of valid range (< 0°C and > 40°C). 3. Charger may not be (properly) connected.	1. Charge at least for 30min. 2. Recommended ambient temperature for charging is 5°C to 35°C. 3. Ensure charger is connected to mains voltage.
Rattling/loud noise during brushing or turning on.	1. Brush head may not be placed correctly onto the brush handle. 2. Brush head may be worn.	1. Check proper fit of brush head on handle. Small gap remains in between. 2. Replace brush head.

The rechargeable toothbrush contains a radio module which operates in the 2.4 to 2.48 GHz band with a maximum power of 1mW.

Hereby, Braun GmbH declares that the radio equipment types 3758a, 3771, 3765, 3754, 3764, 3762 and 3767 are in compliance with Directive 2014/53/EU. The full text of the EU declaration of conformity is available at the following internet address: www.oralb.com/ce.

https://io.oralb.com.hk/
所有圖片僅供參考，具體以實物為準。

進口商：香港寶潔有限公司；
香港灣仔港灣道6-8號瑞安中心6樓；
服務專線：800-969-688
充電器型號3768
刷柄型號3758
刷柄原產地：德國
充電器產地：中國



90095764